FCC Part 96.47 Test Report

Applicant	:	**Fibocom Wireless Inc.**
Equipment	:	**5G Module**
Brand Name	:	**Fibocom**
Model Name	:	**FM150-NA**
FCC ID	:	**ZMOFM150NA**
Standard	:	**FCC Part 96.47**

The product was received on May 14, 2020 and testing was completed on July 15, 2020. We, Sporton International (Kunshan) Inc., would like to declare that the tested sample has been evaluated in accordance with the test procedures and has been in compliance with the applicable technical standards.

The test results in this report apply exclusively to the tested model / sample. Without written approval of Sporton International (Kunshan) Inc., the test report shall not be reproduced except in full.

Jason Jia

Reviewed by: Jason Jia / Supervisor

James Huang

Approved by: James Huang / Manager

ACCREDITED
Cert #5145.02

Sporton International (Kunshan) Inc.
No. 1098, Pengxi North Road, Kunshan Economic Development Zone Jiangsu Province 215300 People's Republic of China

Table of Contents

1 GENERAL DESCRIPTION 5

1.1 APPLICANT 5

1.2 MANUFACTURER 5

1.3 PRODUCT FEATURE OF EQUIPMENT UNDER TEST 5

1.4 PRODUCT SPECIFICATION OF EQUIPMENT UNDER TEST 6

1.5 TESTING LOCATION 7

1.6 APPLICABLE STANDARDS 7

2 TEST CONFIGURATION OF EQUIPMENT UNDER TEST 8

2.1 CONNECTION DIAGRAM OF TEST SYSTEM 8

3 END USER DEVICE ADDITIONAL REQUIREMENT 9

3.1 TEST REQUIREMENT 9

3.2 TEST PROCEDURE 9

3.3 TEST RESULT 10

4 LIST OF MEASURING EQUIPMENT 12

History of this test report

Report No.	Version	Description	Issued Date
FG051416K	01	Initial issue of report	Sep. 11, 2020

Declaration of Conformity:
The test results with all measurement uncertainty excluded are presented in accordance with the regulation limits or requirements declared by manufacturers.
Comments and Explanations:
The declared of product specification for EUT presented in the report are provided by the manufacturer, and the manufacturer takes all the responsibilities for the accuracy of product specification.

Summary of Test Result

Report Clause	Ref Std. Clause	Test Items	Result (PASS/FAIL)	Remark
3	96.47	End User Device additional requirement	Pass	-

1 General Description

1.1 Applicant

Fibocom Wireless Inc.
5/F,Tower A,Technology Building II,1057 Nanhai Avenue,Shenzhen,China

1.2 Manufacturer

Fibocom Wireless Inc.
5/F,Tower A,Technology Building II,1057 Nanhai Avenue,Shenzhen,China

1.3 Product Feature of Equipment Under Test

Product Feature	
Equipment	5G Module
Brand Name	Fibocom
Model Name	FM150-NA
FCC ID	ZMOFM150NA
EUT supports Radios application	LTE Band 42/43/48
IMEI Code	Conducted: 867654040223105
HW Version	V1.0.1
SW Version	89601.1000.00.02.11.20
EUT Stage	Identical Prototype

Remark: The above EUT's information was declared by manufacturer. Please refer to the specifications or user's manual for more detailed description.

1.4 Product Specification of Equipment Under Test

Standards-related Product Specification	
Tx Frequency	LTE Band 42: 3552.5 MHz ~ 3597.5 MHz LTE Band 43: 3602.5 MHz ~ 3697.5 MHz LTE Band 48: 3552.5 MHz ~ 3697.5 MHz
Rx Frequency	LTE Band 42: 3552.5 MHz ~ 3597.5 MHz LTE Band 43: 3602.5 MHz ~ 3697.5 MHz LTE Band 48: 3552.5 MHz ~ 3697.5 MHz
Type of Modulation	QPSK / 16QAM / 64QAM

WWAN ANTENNA GAIN (dBi)		
Frequency Band	**ANT.1： GHT-019A**	**ANT.2： AN0750-64S01BSM**
LTE Band 42	-1.18	**0.42**
LTE Band 43	-0.13	**0.48**
LTE Band 48	-0.13	**0.48**

1.5 Testing Location

Sporton International (Kunshan) Inc. is accredited to ISO/IEC 17025:2017 by American Association for Laboratory Accreditation with Certificate Number 5145.02.

Test Firm	Sporton International (Kunshan) Inc.		
Test Site Location	No. 1098, Pengxi North Road, Kunshan Economic Development Zone Jiangsu Province 215300 People's Republic of China TEL : +86-512-57900158 FAX : +86-512-57900958		
Test Site No.	**Sporton Site No.**	**FCC Designation No.**	**FCC Test Firm Registration No.**
	DFS02-KS	CN1257	314309
Test Engineer	Eloise wang		
Temperature	21 ~ 22 ℃		
Relative Humidity	46 ~ 47 %		

1.6 Applicable Standards

- FCC Part 96.47
- FCC KDB 940660 D01 Part 96 CBRS Eqpt v02
- WINNF-TS-0122-V1.0.1 CBRS CBSD Test Specification

Remark: All test items were verified and recorded according to the standards and without any deviation during the test.

2 Test Configuration of Equipment Under Test

2.1 Connection Diagram of Test System

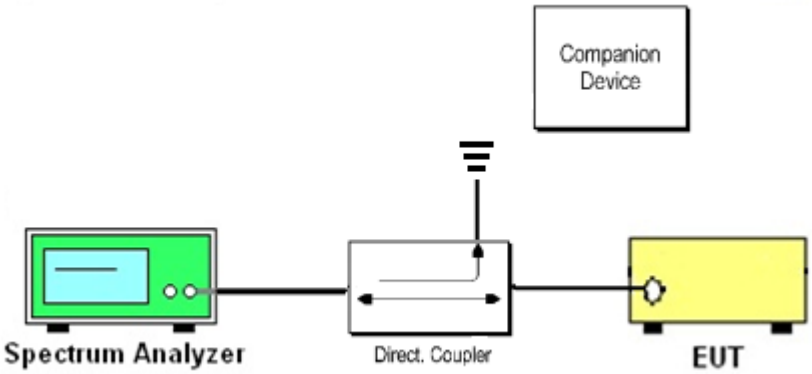

The companion device is certified CBRS (FCC ID: S9GQ710US02)

3 End User Device additional requirement

3.1 Test Requirement

FCC Part 96.47

(a) End User Devices may operate only if they can positively receive and decode an authorization signal transmitted by a CBSD, including the frequencies and power limits for their operation.

(1) An End User Device must discontinue operations, change frequencies, or change its operational power level within 10 seconds of receiving instructions from its associated CBSD.

3.2 Test Procedure

Following procedure can be done by applying WINNF-TS-0122-V1.0.1 CBRS CBSD Test Specification, use the certified Ruckus CBSD (FCC ID: S9GQ710US02) as companion device to show compliance with Part 96.47 requirement for End User Device (EUD):

1. Setup with frequency 3600-3620MHz and power level 17dBm/MHz
2. Enable AP service from Ruckus Cloud management
3. Check EUD Tx Frequency and power
4. Disable AP service from Ruckus Cloud management
    a. Check EUD stops transmission within 10seconds.

5. Setup with 3670-3690MHz & power level 7dBm/MHz
6. Enable AP service from Ruckus Cloud management
7. Check EUD Tx Frequency and power
8. Disable AP service from Ruckus Cloud management
    a. Check EUD stops transmission within 10seconds.

3.3 Test Result

[Step 1] Setup with frequency 3600-3620MHz and power level 17dBm/MHz

[Step 3] Check EUD Tx Frequency and power

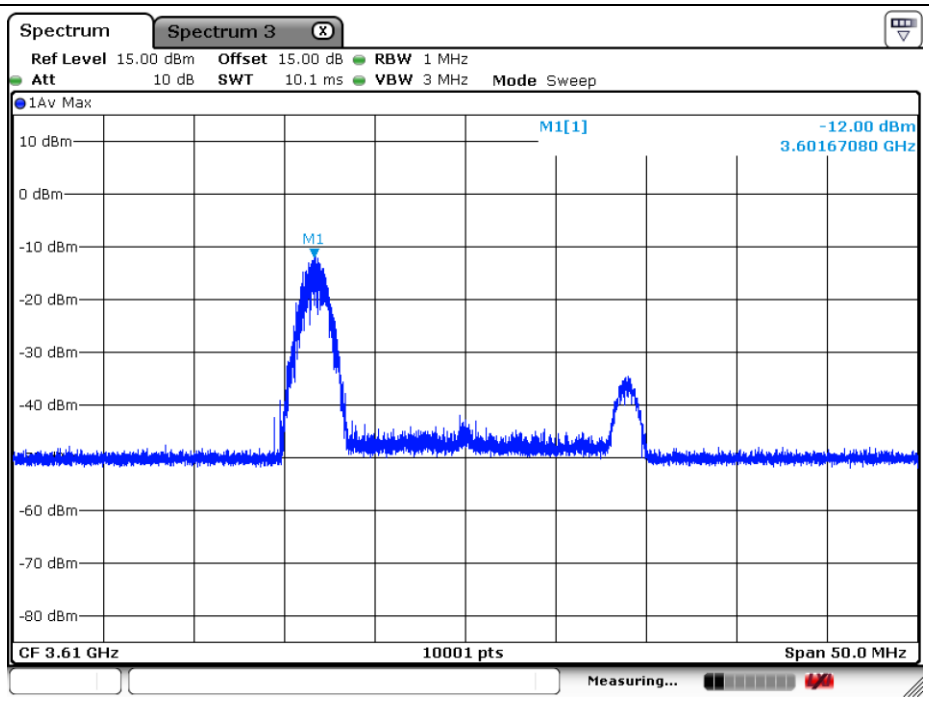

[Step 4.a.] EUD stops transmission within 10 seconds of receiving instructions from its associated CBSD.

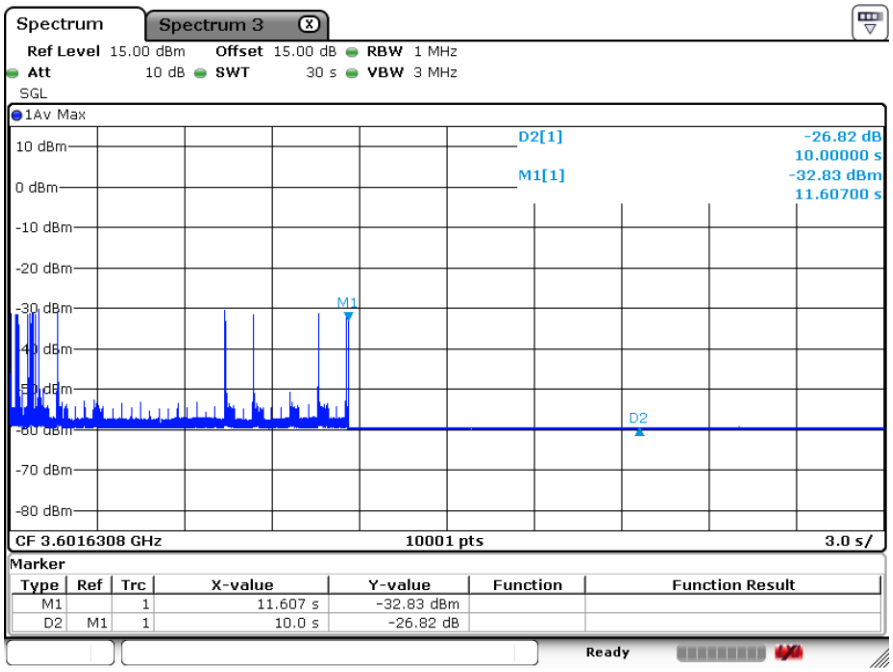

[Step 5] Setup with 3670-3690MHz & power level 7dBm/MHz

[Step 7] Check EUD Tx Frequency and power

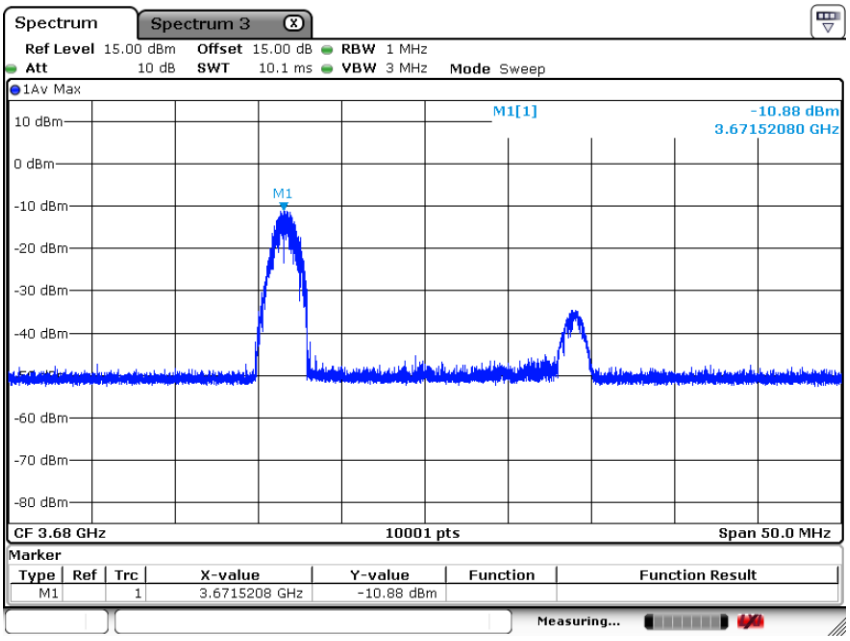

[Step 8.a.] After changing the frequency and power level,

The module (EUT) discontinues operations, change frequencies, or change its operational power level within 10 seconds of receiving instructions from its associated CBSD. Test result is PASS.

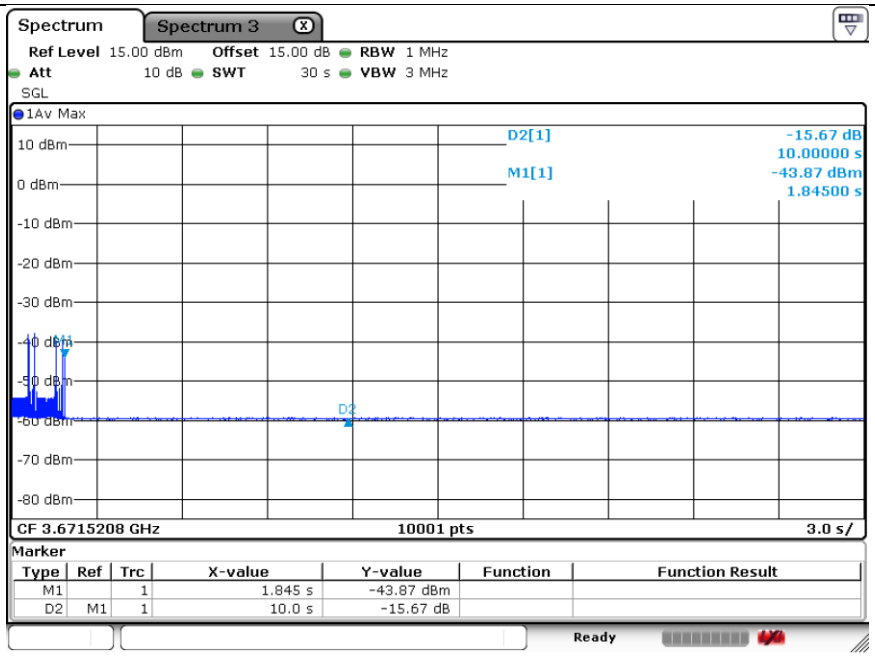

4 List of Measuring Equipment

Instrument	Manufacturer	Model No.	Serial No.	Characteristics	Calibration Date	Test Date	Due Date	Remark
Spectrum Analyzer	R&S	FSV7	101472	10Hz~7GHz	Jan. 08, 2020	Jul. 15, 2020	Jan. 07, 2021	DFS02-KS