Perfect Wireless Experience
完美无线体验

FIBOCOM FM150-NA

Hardware User Manual

Version: V1.0.0

Date: 2021-01-15

Applicability Table

No.	Product model	Description
1	FM150-NA	5G communication module with M.2 interface

FIBOCOM Confidential

Reproduction forbidden without Fibocom Wireless Inc. written authorization - All Rights Reserved.

Copyright

Copyright © 2020 Fibocom Wireless Inc. All rights reserved.

Without the prior written permission of the copyright holder, any company or individual is prohibited to excerpt, copy any part of or the entire document, or distribute the document in any form.

Notice

The document is subject to update from time to time owing to the product version upgrade or other reasons. Unless otherwise specified, the document only serves as the user guide. All the statements, information and suggestions contained in the document do not constitute any explicit or implicit guarantee.

Trademark

The trademark is registered and owned by Fibocom Wireless Inc.

FIBOCOM Confidential

Version Record

Version	Author	Assessor	Approver	Update date	Remark
V1.0.0				2020-08-18	Initial version

FIBOCOM Confidential

Reproduction forbidden without Fibocom Wireless Inc. written authorization - All Rights Reserved.

Contents

1 Foreword 8

1.1 Introduction 8

1.2 Reference Standard 8

1.3 Related Documents 9

2 Overview 10

2.1 Introduction 10

2.2 Specification 10

2.3 CA combinations 12

2.4 EN-DC Combinations 14

2.5 Waring 23

2.5.1 Important Notice to OEM integrators 23

2.5.2 FCC Statement 24

2.5.3 IC Statement 25

2.6 Application Framework 27

3 Application Interface 28

3.1 M.2 Interface 28

3.1.1 Pin Map 29

3.1.2 Pin Definition 30

3.2 Power Supply 34

3.2.1 Power Supply 35

3.2.2 Logic level 36

3.2.3 Power Consumption 37

3.3 Control Signal 40

3.3.1 Module Start-Up 40

3.3.1.1 Start-up Circuit 40

3.3.1.2 Start-up Timing Sequence 41

3.3.2 Module Shutdown 41

3.3.3 Module Reset 42

3.3.4 PCIe Link State 45

3.3.4.1 D0 L1.2 45

3.3.4.2 D3cold L2 45

3.3.5 Timing Application 46

3.4 PCIe & USB 47

FIBOCOM Confidential

Reproduction forbidden without Fibocom Wireless Inc. written authorization - All Rights Reserved.

3.4.1 PCIe Interface *47*
3.4.1.1 PCIe Interface Definition 47
3.4.1.2 PCIe Interface Application 48
3.4.2 USB Interface *50*
3.4.2.1 USB Interface Definition 50
3.4.2.2 USB2.0 Interface Application 50
3.4.2.3 USB3.0 Interface Application 51
3.5 USIM Interface 52
3.5.1 USIM1 Pins *52*
3.5.2 USIM2 Pins *52*
3.5.3 USIM Interface Circuit *53*
3.5.3.1 N.C. SIM Card Slot 53
3.5.3.2 N.O. SIM Card Slot 53
3.5.4 USIM Hot-Plugging *54*
3.5.5 USIM Design *54*
3.6 Status Indicator 55
3.6.1 LED1# Signal *55*
3.6.2 WOWWAN# *56*
3.7 Interrupt Control 56
3.7.1 W_DISABLE *56*
3.7.2 BODYSAR *57*
3.8 ANT Tunable Interface 57
3.9 Configuration Interface 58
4 Radio Frequency 58
4.1 RF Interface 58
4.1.1 RF Interface Functionality *58*
4.1.2 RF Connector Characteristic *59*
4.1.3 RF Connector Dimension *59*
4.1.4 RF Connector Assembly *61*
4.2 Operating Band 62
4.3 Transmitting Power 63
4.4 Receiver Sensitivity 65
4.4.1 Dual Antenna Receiver Sensitivity *65*
4.4.2 Four Antenna Receiver Sensitivity *67*

FIBOCOM Confidential

Reproduction forbidden without Fibocom Wireless Inc. written authorization - All Rights Reserved.

4.5 GNSS 68
4.6 Antenna Design Requirement 68
5 Thermal Design 70
6 Structure Specification 70
6.1 Product Appearance 70
6.2 Dimension of Structure 71
6.3 M.2 Interface Model 72
6.4 M.2 Connector 72
6.5 Storage 73
6.5.1 Storage Life 73
6.6 Packing 73
6.6.1 Tray Package 73
6.6.2 Tray size 75

FIBOCOM Confidential

Reproduction forbidden without Fibocom Wireless Inc. written authorization - All Rights Reserved.

1 Foreword

1.1 Introduction

The document describes the electrical characteristics, RF performance, dimensions and application environment, etc. of FM150-NA (hereinafter referred to as FM150). With the assistance of the document and other instructions, the developers can quickly understand the hardware functions of FM150 modules and develop products.

1.2 Reference Standard

The design of the product complies with the following standards:

- 3GPP TS 51.010-1 V10.5.0: Mobile Station (MS) conformance specification; Part 1: Conformance specification
- 3GPP TS 34.121-1 V10.8.0: User Equipment (UE) conformance specification; Radio transmission and reception (FDD);Part 1: Conformance specification
- 3GPP TS 34.122 V10.1.0: Technical Specification Group Radio Access Network; Radio transmission and reception (TDD)
- 3GPP TS 38.300 V15.5.0 : 3rd Generation Partnership Project; Technical Specification Group Radio Access Network; NR; NR and NG-RAN Overall Description; Stage 2
- 3GPP TS 38.521-1 V15.2.0 : User Equipment (UE) conformance specification; Radio transmission and reception; Part 1: Range 1 Standalone;
- 3GPP TS 38.521-3 V15.2.0 :User Equipment (UE) conformance specification; Radio transmission and reception; Part 3: Range 1 and Range 2 Interworking operation with other radios;
- 3GPP TS 36.521-1 V15.0.0: User Equipment (UE) conformance specification; Radio transmission and reception; Part 1: Conformance testing
- 3GPP TS 21.111 V10.0.0: USIM and IC card requirements
- 3GPP TS 51.011 V4.15.0: Specification of the Subscriber Identity Module -Mobile Equipment (SIM-ME) interface
- 3GPP TS 31.102 V10.11.0: Characteristics of the Universal Subscriber Identity Module (USIM) application
- 3GPP TS 31.11 V10.16.0: Universal Subscriber Identity Module (USIM) Application Toolkit(USAT)
- 3GPP TS 36.124V10.3.0: Electro Magnetic Compatibility (EMC) requirements for mobile terminals and ancillary equipment
- 3GPP TS 27.007 V10.0.8: AT command set for User Equipment (UE)

FIBOCOM Confidential

Reproduction forbidden without Fibocom Wireless Inc. written authorization - All Rights Reserved.

- 3GPPTS27.005 V10.0.1: Use of Data Terminal Equipment - Data Circuit terminating Equipment (DTE - DCE) interface for Short Message Service (SMS) and Cell Broadcast Service (CBS)
- PCI Express M.2 Specification Rev1.1

1.3 Related Documents

- *FIBOCOM FG150 & FM150 AT Commands User Manual*

FIBOCOM Confidential

Reproduction forbidden without Fibocom Wireless Inc. written authorization - All Rights Reserved.

2 Overview

2.1 Introduction

FM150 is a highly integrated 5G WWAN module which uses M.2 form factor interface. It supports 5G NR SUB6/LTE FDD/LTE TDD/WCDMA systems and can be applied to most cellular networks of mobile carrier in the world.

2.2 Specification

Specification	
CPU	Qualcomm SDX55, 7nm process, ARM Cortex-A7, up to 1.5 GHz
Memory	4Gb LPDDRX4+4Gb NAND Flash
Supported operating System	Linux/Android/Windows
Operating Band	LTE FDD: Band 2, 4, 5, 7, 12, 13, 14, 17, 25, 26, 29, 30, 66, 71
	LTE TDD: Band 41, 42, 43, 48
	LAA Band 46 Receiver only
	5G NR Support SA/NSA
	NR: n2, n5, n7, n12, n25, n41, n48, n66, n71, n77,n78
	WCDMA/HSPA+: Band 1, 2, 4, 5, 8
	GNSS: Support GPS, GLONASS, BDS, Galileo, QZSS
Power Level	Class 3 (23.5dBm±1dBm) for WCDMA bands Class 3 (23dBm±1dBm) for LTE bands Class 3 (23dBm±1dBm) for NR Sub6 bands Class 2 (26dBm±1dBm) for B41/n41/77 bands
WCDMA Characteristic	Support 3GPP R9 DC-HSPA+ Support 16-QAM, 64-QAM and QPSK modulation 3GPP R6 CAT6 HSUPA: Maximum UL rate 5.76Mbps 3GPP R8 CAT24 DC-HSPA+: Maximum DL rate 42Mbps
LTE Characteristic	Support 3GPP R15 Support Max 7 DLCA Support DL-256QAM, UL-256QAM Support RF bandwidth 1.4-20MHz

FIBOCOM Confidential

Reproduction forbidden without Fibocom Wireless Inc. written authorization - All Rights Reserved.

Specification	
	Support DL 4*4 MIMO Maximum UL peak rate 211Mbps (CAT 18) Maximum DL peak rate 2.0Gbps (CAT 20)
NR Sub6 SA Characteristic	Support DL-256QAM, UL-256QAM Support RF bandwidth 5-100MHz Support carrier spacing 15KHz and 30KHz optional UL Single TX chain DL Max support 4*4 MIMO Max UL peak rate of 450Mbps Max DL peak rate 2.1Gbps
NR Sub6 EN-DC Characteristic	LTE Modulation: DL-256QAM, UL-256QAM NR Modulation: DL-256QAM, UL-256QAM LTE DL Max support 4*4 MIMO NR DL Max support 4*4 MIMO Max UL peak rate of 555Mbps Max DL peak rate 4.1Gbps
Power Supply	DC 3.135～4.4V, Typical 3.8V
Temperature	Normal operating temperature: -30℃ ~ +75℃ Extended operating temperature: -40℃ ~ +85℃ Storage temperature: -40°C ~ +85°C
Physical Characteristics	Interface: M.2 Key-B
	Dimension:30 x 52 x 2.3mm
	Weight: About 8.2 g
Interface	
Antenna Connector	WWAN Antenna x 4
	Support 4*4 MIMO
Function Interface	Dual SIM, 3V/1.8V
	PCIe 3.0 X1
	Super Speed USB
	High Speed USB
	W_Disable#

FIBOCOM Confidential

Reproduction forbidden without Fibocom Wireless Inc. written authorization - All Rights Reserved.

Specification	
	Body Sar(Reserved)
	LED
	Tunable antenna
	I2S(Reserved)
Software	
Protocol Stack	IPV4/IPV6
AT commands	3GPP TS 27.007 and 27.005
Firmware update	USB/PCIe
Other features	Multiple carrier
	AGNSS

Note:

When temperature goes beyond normal operating temperature range, RF performance of module may be slightly off 3GPP specifications.

2.3 CA combinations

DL CA Combinations			
2DLCA	**3DLCA**	**4DLCA**	**5DLCA**
CA_4A-12A	CA_4A-4A-12A	CA_2A-2A-12A-66A	CA_46C-48C-66A
CA_2A-4A	CA_2A-4A-4A	CA_2A-2A-66A-66A	CA_2A-46C-48C
CA_4A-4A	CA_2A-2A-4A	CA_2A-2A-4A-71A	CA_46C-48A-48A-66A
CA_4A-5A	CA_2A-4A-5A	CA_2A-2A-66A-71A	CA_2A-46C-48A-48A
CA_66A-66A	CA_2A-12A-66A	CA_2A-66C-71A	CA_46A-48D-66A
CA_66B	CA_12A-66A-66A	CA_2A-66A-66A-71A	CA_2A-46A-48D
CA_66C	CA_12A-66C	CA_2A-12A-66C	CA_46C-48D
CA_2A-66A	CA_2A-66A-66A	CA_2A-12A-66A-66A	CA_46D-48A-66A
CA_12A-66A	CA_2A-66C	CA_2A-2A-4A-12A	CA_48E-66A
CA_2A-12A	CA_2A-2A-66A	CA_2A-4A-4A-12A	CA_2A-46D-48A
CA_2A-2A	CA_2C-66A	CA_2C-66A-66A	CA_46D-48C
CA_2C	CA_2A-2A-12A	CA_48E	CA_2A-46D-66A
CA_2A-5A	CA_2A-4A-71A	CA_48D-66A	CA_2A-46A-46C-66A
CA_2A-71A	CA_2A-66A-71A	CA_4A-46D	CA_2A-46E
CA_4A-71A	CA_66A-66A-71A	CA_2A-46D	CA_4A-46A-46D
CA_66A-71A	CA_66C-71A	CA_46D-66A	CA_2A-46A-46D
CA_2A-48A	CA_4A-4A-71A	CA_2A-46A-46A-66A	CA_12A-46E
CA_48A-66A	CA_2A-2A-71A	CA_2A-46C-66A	CA_2A-12A-30A-66A-66A

Reproduction forbidden without Fibocom Wireless Inc. written authorization - All Rights Reserved.

CA_48A-48A	CA_48D	CA_4A-46A-46C	CA_46E-66A
CA_48C	CA_48C-48A	CA_46A-46C-66A	CA_46D-66A-66A
CA_2A-46A	CA_2A-48A-66A	CA_2A-2A-66C	CA_2A-7A-7A-66A-66A
CA_4A-46A	CA_2A-48A-48A	CA_46A-48C-66A	CA_2A-7C-66A-66A
CA_46A-66A	CA_2A-48C	CA_2A-46A-48C	CA_2A-7A-7A-29A-66A
CA_2A-29A	CA_48A-48A-66A	CA_46A-48A-48A-66A	CA_2A-7C-29A-66A
CA_4A-7A	CA_48C-66A	CA_2A-46A-48A-48A	CA_5A-7C-66A-66A
CA_5A-7A	CA_4A-46A-46A	CA_46A-48D	CA_2A-5A-30A-66A-66A
CA_5A-66A	CA_4A-46C	CA_2A-46A-46C	
CA_5A-29A	CA_2A-46C	CA_46C-48A-66A	**6DLCA**
CA_5A-12A	CA_2A-46A-46A	CA_2A-46C-48A	CA_2A-46D-66C
CA_7A-7A	CA_46C-66A	CA_2A-12A-30A-66A	CA_46A-48E-2A
CA_7C	CA_46A-46A-66A	CA_2A-30A-66A-66A	CA_46C-48D-66A
CA_2A-7A	CA_2A-46A-66A	CA_12A-30A-66A-66A	CA_46C-48E
CA_7A-66A	CA_2A-4A-12A	CA_2A-4A-5A-29A	CA_46E-66A-66A
CA_7A-26A	CA_46A-48A-66A	CA_2A-4A-5A-12A	
CA_12A-25A	CA_2A-46A-48A	CA_2A-4A-7A-7A	**7DLCA**
CA_13A-66A	CA_4A-4A-7A	CA_2A-4A-7C	CA_46C-48E-2A
CA_2A-30A	CA_2A-30A-66A	CA_2A-7A-7A-66A	CA_46C-48E-66A
CA_29A-66A	CA_2A-5A-29A	CA_2A-7C-66A	
CA_30A-66A	CA_2A-5A-12A	CA_2A-7A-66A-66A	
CA_4A-29A	CA_4A-5A-29A	CA_7A-7A-66A-66A	
CA_4A-30A	CA_4A-5A-12A	CA_7C-66A-66A	
CA_5A-25A	CA_2A-7A-7A	CA_2A-13A-66A-66A	
CA_5A-66A	CA_2A-7C	CA_2A-4A-7A-12A	
CA_7A-12A	CA_2A-4A-7A	CA_2A-5A-66A-66A	
CA_7A-29A	CA_2A-7A-66A	CA_2A-7A-7A-29A	
CA_12A-30A	CA_4A-7A-7A	CA_2A-7C-29A	
CA_2A-17A	CA_4A-7C	CA_2A-7A-29A-66A	
CA_29A-30A	CA_7A-66A-66A	CA_2A-7A-12A-66A	
CA_4A-17A	CA_7A-7A-66A	CA_5A-7A-66A-66A	
CA_5A-30A	CA_7C-66A	CA_7A-7A-29A-66A	
CA_12A-12A	CA_7A-7A-26A	CA_7C-29A-66A	
CA_5A-13A	CA_13A-66A-66A	CA_2A_29A-30A-66A	
	CA_2A-13A-66A	CA_2A-4A-12A-30A	
	CA_2A-29A-66A	CA_2A-4A-29A-30A	
	CA_2A-4A-12A	CA_2A-4A-5A-30A	
	CA_2A-4A-29A	CA_2A-5A-12A-66A	
	CA_2A-4A-30A	CA_2A-5A-30A-66A	
	CA_2A-5A-7A	CA_29A-30A-66A-66A	
	CA_2A-5A-66A	CA_5A-30A-66A-66A	
	CA_2A-7A-12A	CA _2A-4A-12A-12A	
	CA_2A-7A-29A		
	CA_29A-66A-66A		

Fibocom Confidential

Reproduction forbidden without Fibocom Wireless Inc. written authorization - All Rights Reserved.

	CA_30A-66A-66A		
	CA_4A-7A-12A		
	CA_5A-66A-66A		
	CA_5A-7A-7A		
	CA_5A-7C		
	CA_5A-7A-66A		
	CA_7A-12A-66A		
	CA_7A-29A-66A		
	CA_7A-7A-29A		
	CA_7C-29A		
	CA_12A-30A-66A		
	CA_2A-12A-30A		
	CA_2A-29A-30A		
	CA_2A-5A-30A		
	CA_29A-30A-66A		
	CA_4A-12A-30A		
	CA_4A-29A-30A		
	CA_4A-5A-30A		
	CA_5A-12A-66A		
	CA_5A-30A-66A		
	CA_2A-12A-12A		
	CA_4A-12A-12A		

UL CA Combinations		
2CA	Inter-band	2A+12A, 2A+5A, 2A+66A, 2A+4A
		4A+12A
		5A+66A
		66A+12A
	Intra-band(contiguous)	5B, 48C

2.4 EN-DC Combinations

EN-DC Combination	4G DL 4x4 MIMO	5G-NR UL 4x4 MIMO	4G UL	5G-NR UL
DC_2A_n12A	2A	-	2A	n12A
DC_66A_n12A	66A	-	66A	n12A
DC_2A-66A_n12A	2A-66A	-	2A, 66A	n12A
DC_66A_n25A	66A	n25A	66A	n25A
DC_46A_66A_n25A	66A	n25A	66A	n25A
DC_46C_66A_n25A	66A	n25A	66A	n25A
DC_46D_66A_n25A	66A	n25A	66A	n25A
DC_5A_n2A	-	n2A	5A	n2A
DC_12A_n2A	-	n2A	12A	n2A
DC_66A_n2A	66A	n2A	66A	n2A

Reproduction forbidden without Fibocom Wireless Inc. written authorization - All Rights Reserved.

EN-DC Combination	4G DL 4x4 MIMO	5G-NR UL 4x4 MIMO	4G UL	5G-NR UL
DC_13A_n2A	-	n2A	13A	n2A
DC_2A-5A_n2A	2A	n2A	5A	n2A
DC_5A-30A_n2A	-	n2A	5A, 30A	n2A
DC_5A-66A_n2A	66A	n2A	5A, 66A	n2A
DC_12A-30A_n2A	-	n2A	12A, 30A	n2A
DC_2A-12A_n2A	2A	n2A	12A	n2A
DC_2A-66A_n2A	2A-66A	n2A	66A	n2A
DC_12A-66A_n2A	66A	n2A	12A, 66A	n2A
DC_13A-66A_n2A	66A	n2A	13A, 66A	n2A
DC_13A-48A_n2A	48A	n2A	13A, 48A	n2A
DC_2A-5A-30A_n2A	2A	n2A	5A, 30A	n2A
DC_2A-5A-66A_n2A	2A-66A	n2A	5A, 66A	n2A
DC_2A-12A-30A_n2A	2A	n2A	12A, 30A	n2A
DC_5A-30A-66A_n2A	66A	n2A	5A, 30A, 66A	n2A
DC_5A-66A-66A_n2A	66A-66A	n2A	5A, 66A	n2A
DC_12A-30A-66A_n2A	66A	n2A	12A, 30A, 66A	n2A
DC_12A-66A-66A_n2A	66A-66A	n2A	12A, 66A	n2A
DC_30A-66A-66A_n2A	66A-66A	n2A	30A, 66A	n2A
DC_2A-12A-66A_n2A	2A-66A	n2A	12A, 66A	n2A
DC_13A-48B_n2A	48B	n2A	13A, 48A	n2A
DC_2A-5A-30A-66A_n2A	2A-66A	n2A	5A, 30A, 66A	n2A
DC_2A-12A-30A-66A_n2A	2A-66A	n2A	12A, 30A, 66A	n2A
DC_2A-5A-66A-66A_n2A	2A-66A-66A	n2A	5A, 66A	n2A
DC_2A-12A-66A-66A_n2A	2A-66A-66A	n2A	12A, 66A	n2A
DC_5A-30A-66A-66A_n2A	66A-66A	n2A	5A, 30A, 66A	n2A
DC_12A-30A-66A-66A_n2A	66A-66A	n2A	12A, 30A, 66A	n2A
DC_13A-48D_n2A	48D	n2A	13A, 48A	n2A
DC_13A-48E_n2A	48E	n2A	13A, 48A	n2A
DC_12A_n41A	-	n41A	12A	n41A
DC_2A_n41A	-	n41A	2A	n41A
DC_66A_n41A	-	n41A	66A	n41A
DC_25A_n41A	-	n41A	25A	n41A
DC_26A_n41A	-	n41A	26A	n41A
DC_2A-66A_n41A	-	n41A	2A, 66A	n41A
DC_2A-46A_n41A	-	n41A	2A	n41A
DC_46A-66A_n41A	-	n41A	66A	n41A
DC_2A-2A_n41A	-	n41A	2A	n41A
DC_2A-46C_n41A	-	n41A	2A	n41A
DC_2A-46A-66A_n41A	-	n41A	2A, 66A	n41A
DC_46C-66A_n41A	-	n41A	66A	n41A
DC_2A-2A-66A_n41A	-	n41A	2A, 66A	n41A
DC_2A-46D_n41A	-	n41A	2A	n41A
DC_2A-46C-66A_n41A	-	n41A	2A, 66A	n41A
DC_46D-66A_n41A	-	n41A	66A	n41A
DC_2A-46D-66A_n41A	-	n41A	2A, 66A	n41A

Fibocom Confidential

Reproduction forbidden without Fibocom Wireless Inc. written authorization - All Rights Reserved.

EN-DC Combination	4G DL 4x4 MIMO	5G-NR UL 4x4 MIMO	4G UL	5G-NR UL
DC_2A_n5A	2A	-	2A	n5A
DC_66A_n5A	66A	-	66A	n5A
DC_48A_n5A	48A	-	48A	n5A
DC_2A-5A_n5A	2A	-	2A	n5A
DC_2A-66A_n5A	2A-66A	-	2A, 66A	n5A
DC_2A-2A_n5A	2A-2A	-	2A, 2A	n5A
DC_2A-12A_n5A	2A	-	2A	n5A
DC_2A-30A_n5A	2A	-	2A,	n5A
DC_5A-66A_n5A	66A	-	66A	n5A
DC_12A-66A_n5A	66A	-	66A	n5A
DC_30A-66A_n5A	66A	-	66A	n5A
DC_66A-66A_n5A	66A-66A	-	66A	n5A
DC_2A-48A_n5A	2A-48A	-	2A, 48A	n5A
DC_2A-46A_n5A	2A	-	2A	n5A
DC_46A-48A_n5A	48A	-	48A	n5A
DC_46A-66A_n5A	66A	-	66A	n5A
DC_7A-66A_n5A	66A	-	66A	n5A
DC_48A-66A_n5A	48A-66A	-	48A, 66A	n5A
DC_2A-2A-30A_n5A	2A-2A	-	2A	n5A
DC_2A-2A-66A_n5A	2A-2A-66A	-	2A, 66A	n5A
DC_2A-5A-66A_n5A	2A-66A	-	2A, 66A	n5A
DC_2A-30A-66A_n5A	2A-66A	-	2A, 66A	n5A
DC_2A-66A-66A_n5A	2A-66A-66A	-	2A, 66A	n5A
DC_30A-66A-66A_n5A	66A-66A	-	66A	n5A
DC_66A-66A-66A_n5A	66A-66A-66A	-	66A	n5A
DC_2A-46A-48A_n5A	2A-48A	-	2A, 48A	n5A
DC_2A-46C_n5A	2A	-	2A	n5A
DC_46C-48A_n5A	48A	-	48A	n5A
DC_46C-66A_n5A	66A	-	66A	n5A
DC_48B-66A_n5A	48B-66A	-	48A, 66A	n5A
DC_2A-2A-30A-66A_n5A	2A-2A-66A	-	2A, 66A	n5A
DC_2A-2A-66A-66A_n5A	2A-2A-66A-66A	-	2A, 66A	n5A
DC_2A-30A-66A-66A_n5A	2A-66A-66A	-	2A, 66A	n5A
DC_30A-66A-66A-66A_n5A	66A-66A-66A	-	66A	n5A
DC_2A-7A-7A-66A_n5A	2A-66A	-	2A, 66A	n5A
DC_2A-46C-48A_n5A	2A-48A	-	2A, 48A	n5A
DC_2A-46D_n5A	2A	-	2A	n5A
DC_46D-48A_n5A	48A	-	48A	n5A
DC_48D-66A_n5A	48D-66A	-	48A, 66A	n5A
DC_46D-66A_n5A	66A	-	66A	n5A
DC_2A-46E_n5A	2A	-	2A	n5A
DC_2A-46D-48A_n5A	2A-48A	-	2A, 48A	n5A

Fibocom Confidential

Reproduction forbidden without Fibocom Wireless Inc. written authorization - All Rights Reserved.

EN-DC Combination	4G DL 4x4 MIMO	5G-NR UL 4x4 MIMO	4G UL	5G-NR UL
DC_46E-48A_n5A	48A	-	48A	n5A
DC_48E-66A_n5A	48E-66A	-	48A, 66A	n5A
DC_2A-2A-46D_n5A	2A-2A	-	2A	n5A
DC_2A-46D-66A_n5A	2A-66A	-	2A, 66A	n5A
DC_46D-66A-66A_n5A	66A-66A	-	66A	n5A
DC_2A-46E-48A_n5A	-	-	2A, 48A	n5A
DC_13A_n66A	-	n66A	13A	n66A
DC_2A_n66A	2A	n66A	2A	n66A
DC_5A_n66A	-	n66A	5A	n66A
DC_12A_n66A	-	n66A	12A	n66A
DC_30A_n66A	-	n66A	30A	n66A
DC_71A_n66A	-	n66A	71A	n66A
DC_48A_n66A	48A	n66A	48A	n66A
DC_7A_n66A	-	n66A	7A	n66A
DC_2A-13A_n66A	2A	n66A	2A, 13A	n66A
DC_13A-66A_n66A	66A	n66A	13A	n66A
DC_2A-5A_n66A	2A	n66A	2A, 5A	n66A
DC_2A-12A_n66A	2A	n66A	2A, 12A	n66A
DC_2A-30A_n66A	2A	n66A	2A, 30A	n66A
DC_2A-66A_n66A	2A-66A	n66A	2A	n66A
DC_5A-30A_n66A	-	n66A	5A, 30A	n66A
DC_5A-66A_n66A	66A	n66A	5A	n66A
DC_12A-30A_n66A	-	n66A	12A, 30A	n66A
DC_12A-66A_n66A	66A	n66A	12A	n66A
DC_30A-66A_n66A	66A	n66A	30A	n66A
DC_2A-2A_n66A	2A-2A	n66A	2A, 2A	n66A
DC_7A-13A_n66A	-	n66A	7A, 13A	n66A
DC_2A-7A_n66A	2A	n66A	2A, 7A	n66A
DC_66A-71A_n66A	66A	n66A	71A	n66A
DC_2A-48A_n66A	2A-48A	n66A	2A, 48A	n66A
DC_46A-48A_n66A	48A	n66A	48A	n66A
DC_2A-46A_n66A	2A	n66A	2A	n66A
DC_13A-46A_n66A	-	n66A	13A	n66A
DC_5A-46A_n66A	-	n66A	5A	n66A
DC_13A-48A_n66A	48A	n66A	13A, 48A	n66A
DC_66A_7A_n66A	66A	n66A	7A	n66A
DC_7A-7A_n66A	-	n66A	7A	n66A
DC_7C_n66A	-	n66A	7A	n66A
DC_7A-66A_n66A	66A	n66A	7A	n66A
DC_2A-5A-66A_n66A	2A-66A	n66A	2A, 5A	n66A
DC_2A-13A-66A_n66A	2A-66A	n66A	2A, 13A	n66A
DC_2A-2A-5A_n66A	2A-2A	n66A	2A, 5A	n66A

Fibocom Confidential

Reproduction forbidden without Fibocom Wireless Inc. written authorization - All Rights Reserved.

EN-DC Combination	4G DL 4x4 MIMO	5G-NR UL 4x4 MIMO	4G UL	5G-NR UL
DC_2A-2A-12A_n66A	2A-2A	n66A	2A, 12A	n66A
DC_2A-5A-30A_n66A	2A	n66A	2A, 5A, 30A	n66A
DC_2A-12A-30A_n66A	2A	n66A	2A, 12A, 30A	n66A
DC_5A-30A-66A_n66A	66A	n66A	5A, 30A	n66A
DC_12A-30A-66A_n66A	66A	n66A	12A, 30A	n66A
DC_2A-12A-66A_n66A	2A-66A	n66A	2A, 12A	n66A
DC_2A-66A-71A_n66A	2A-66A	n66A	2A, 71A	n66A
DC_2A-7A-7A_n66A	2A	n66A	2A, 7A	n66A
DC_2A-7C_n66A	2A	n66A	2A,7A	n66A
DC_2A-46A-48A_n66A	2A-48A	n66A	2A, 48A	n66A
DC_2A-46C_n66A	2A	n66A	2A,	n66A
DC_46C-48A_n66A	48A	n66A	48A	n66A
DC_13A-48B_n66A	48B	n66A	2A, 48A	n66A
DC_2A-7A-66A_n66A	2A-66A	n66A	2A, 7A	n66A
DC_7A-7A-13A_n66A	-	n66A	7A, 13A	n66A
DC_7C-13A_n66A	-	n66A	7A,13A	n66A
DC_2A-7A-13A_n66A	2A	n66A	2A, 7A, 13A	n66A
DC_2A-2A-5A-30A_n66A	2A-2A	n66A	2A, 5A,30A	n66A
DC_2A-2A-5A-66A_n66A	2A-2A-66A	n66A	2A, 48A	n66A
DC_2A-2A-12A-30A_n66A	2A-2A	n66A	2A, 12A,30A	n66A
DC_2A-2A-12A-66A_n66A	2A-2A-66A	n66A	2A, 12A	n66A
DC_2A-5A-30A-66A_n66A	2A-66A	n66A	2A,5A,30A	n66A
DC_2A-12A-30A-66A_n66A	2A-66A	n66A	2A, 12A,30A	n66A
DC_2A-7A-7A-13A_n66A	2A	n66A	2A, 7A,13A	n66A
DC_2A-7A-7A-66A_n66A	2A-66A	n66A	2A, 7A	n66A
DC_2A-46C-48A_n66A	2A-48A	n66A	2A, 48A	n66A
DC_2A-46D_n66A	2A	n66A	2A,	n66A
DC_46D-48A_n66A	48A	n66A	48A	n66A
DC_2A-7C-13A_n66A	2A	n66A	2A, 7A,13A	n66A
DC_13A-48D_n66A	48D	n66A	13A, 48A	n66A
DC_2A-5A-7A-7A_n66A	2A	n66A	2A, 7A, 5A	n66A
DC_2A-5A-7C_n66A	2A	n66A	2A, 7A, 5A	n66A
DC_2A-46D-48A_n66A	2A-48A	n66A	2A, 48A	n66A
DC_2A-46E_n66A	2A	n66A	2A	n66A
DC_46E-48A_n66A	48A	n66A	48A	n66A
DC_13A-48E_n66A	48E	n66A	13A, 48A	n66A
DC_2A-46E-48A_n66A	-	n66A	2A, 48A	n66A
DC_2A_n71A	2A	-	2A	n71A
DC_66A_n71A	66A	-	66A	n71A
DC_2A-7A_n71A	2A	-	2A	n71A
DC_66C_n71A	66C	-	66A	n71A
DC_2A-66A_n71A	2A-66A	-	2A, 66A	n71A

Fibocom Confidential

Reproduction forbidden without Fibocom Wireless Inc. written authorization - All Rights Reserved.

EN-DC Combination	4G DL 4x4 MIMO	5G-NR UL 4x4 MIMO	4G UL	5G-NR UL
DC_2A_(n)71AA	2A	-	2A	n71A
DC_66A-66A_n71A	66A-66A	-	66A	n71A
DC_66A_(n)71AA	66A	-	66A	n71A
DC_2A-46A_n71A	2A	-	2A	n71A
DC_46A-66A_n71A	66A	-	66A	n71A
DC_2A-2A_n71A	2A-2A	-	2A	n71A
DC_66C_(n)71AA	66C	-	66A	n71A
DC_2A-66A_(n)71AA	2A-66A	-	2A, 66A	n71A
DC_2A-46C_n71A	2A	-	2A	n71A
DC_2A-46A-66A_n71A	2A-66A	-	2A, 66A	n71A
DC_2A-66A-66A_n71A	2A-66A-66A	-	2A, 66A	n71A
DC_46C-66A_n71A	66A	-	66A	n71A
DC_2A-2A-66A_n71A	2A-2A-66A	-	2A, 66A	n71A
DC_2C-66A_n71A	2C-66A	-	2A, 66A	n71A
DC_2A-66C_(n)71AA	2A-66C	-	2A, 66A	n71A
DC_2A-46D_n71A	2A	-	2A	n71A
DC_2A-46C-66A_n71A	2A-66A	-	2A, 66A	n71A
DC_46D-66A_n71A	66A	-	66A	n71A
DC_2A-46D-66A_n71A	2A-66A	-	2A, 66A	n71A
DC_7A_n78A	7A	n78A	7A	n78A
DC_5A_n78A	-	n78A	5A	n78A
DC_66A_n78A	66A	n78A	66A	n78A
DC_2A_n78A	2A	n78A	2A	n78A
DC_12A_n78A	-	n78A	12A	n78A
DC_4A_n78A	4A	n78A	4A	n78A
DC_7C_n78A	7C	n78A	7A	n78A
DC_5A-7A_n78A	7A	n78A	5A, 7A	n78A
DC_7A-7A_n78A	7A-7A	n78A	7A	n78A
DC_66A-66A_n78A	66A_66A	n78A	66A	n78A
DC_2A-7A_n78A	2A-7A	n78A	2A, 7A	n78A
DC_2A-66A_n78A	2A-66A	n78A	2A, 66A	n78A
DC_7A-66A_n78A	7A-66A	n78A	7A, 66A	n78A
DC_7A-46A_n78A	7A	n78A	7A	n78A
DC_2A-5A_n78A	2A	n78A	2A, 5A	n78A
DC_2A-12A_n78A	2A	n78A	2A, 12A	n78A
DC_2A-7A-7A_n78A	2A-7A-7A	n78A	2A, 7A	n78A
DC_2A-7C_n78A	2A-7C	n78A	2A, 7A	n78A
DC_2A-7A-66A_n78A	2A-7A-66A	n78A	2A, 7A, 66A	n78A
DC_7A-7A-66A_n78A	7A-7A-66A	n78A	7A, 66A	n78A
DC_7C-66A_n78A	7C-66A	n78A	7A, 66A	n78A
DC_7A-66A-66A_n78A	7A-66A-66A	n78A	7A, 66A	n78A
DC_5A-7A-7A_n78A	7A-7A	n78A	5A, 7A	n78A

FIBOCOM Confidential

Reproduction forbidden without Fibocom Wireless Inc. written authorization - All Rights Reserved.

EN-DC Combination	4G DL 4x4 MIMO	5G-NR UL 4x4 MIMO	4G UL	5G-NR UL
DC_2A-66A-66A_n78A	2A-66A-66A	n78A	2A, 66A	n78A
DC_7A-46C_n78A	7A	n78A	7A	n78A
DC_7C-66A-66A_n78A	7C-66A-66A	n78A	7A, 66A	n78A
DC_2A-7C-66A_n78A	2A-7C-66A	n78A	2A, 7A, 66A	n78A
DC_2A-7A-7A-66A_n78A	2A-7A-7A, 2A-7A-66A, 7A-7A-66A	n78A	2A, 7A, 66A	n78A
DC_2A-7A-66A-66A_n78A	2A-7A-66A, 2A-66A-66A, 7A-66A-66A	n78A	2A, 7A, 66A	n78A
DC_7A-7A-66A-66A_n78A	7A-7A-66A, 7A-66A-66A	n78A	7A, 66A	n78A
DC_7A-46D_n78A	7A	n78A	7A	n78A
DC_2A-7C-66A-66A_n78A	2A-7C-66A, 2A-66A-66A, 7C-66A-66A	n78A	2A, 7A, 66A	n78A
DC_2A-7A-7A-66A-66A_n78A	2A-7A-7A, 2A-7A-66A, 2A-66A-66A, 7A-7A-66A, 7A-66A-66A	n78A	2A, 7A, 66A	n78A
DC_7A-46E_n78A	7A	n78A	7A	n78A
DC_66A_n7A	66A	-	66A	n7A
DC_13A_n77A	-	n77A	13A	n77A
DC_2A_n77A	2A	n77A	2A	n77A
DC_5A_n77A	-	n77A	5A	n77A
DC_66A_n77A	66A	n77A	66A	n77A
DC_13A-66A_n77A	66A	n77A	13A, 66A	n77A
DC_2A-13A_n77A	2A	n77A	2A, 13A	n77A
DC_2A-2A_n77A	2A-2A	n77A	2A	n77A
DC_2A-5A_n77A	2A	n77A	2A, 5A	n77A
DC_2A-66A_n77A	2A-66A	n77A	2A, 66A	n77A
DC_5A-66A_n77A	66A	n77A	5A, 66A	n77A
DC_66A-66A_n77A	66A-66A	n77A	66A	n77A
DC_13A-66A-66A_n77A	66A-66A	n77A	13A, 66A	n77A
DC_2A-13A-66A_n77A	2A-66A	n77A	2A, 13A, 66A	n77A
DC_2A-2A-13A_n77A	2A-2A	n77A	2A, 13A	n77A
DC_2A-2A-5A_n77A	2A-2A	n77A	2A, 5A	n77A
DC_2A-2A-66A_n77A	2A-2A-66A	n77A	2A, 66A	n77A
DC_2A-5A-66A_n77A	2A-66A	n77A	2A, 5A, 66A	n77A
DC_2A-66A-66A_n77A	2A-66A-66A	n77A	2A, 66A	n77A
DC_5A-66A-66A_n77A	66A-66A	n77A	5A, 66A	n77A
DC_66A-66A-66A_n77A	66A-66A-66A	n77A	66A	n77A
DC_5A-66A-66A_n66A	66A-66A	n66A	5A	n66A
DC_2A-2A-5A_n5A	2A-2A	-	2A	n5A
DC_5A-66A-66A_n5A	66A-66A	-	66A	n5A
DC_5A-5A-66A-66A_n2A	66A-66A	n2A	5A, 66A	n2A
DC_2A-2A-5A-66A_n5A	2A-2A-66A	-	2A, 66A	n5A
DC_2A-5A-66A-66A_n5A	2A-66A-66A	-	2A, 66A	n5A
DC_2A-2A-13A-66A-66A_n5A	2A-2A-66A-66A	-	2A, 66A	n5A

FIBOCOM Confidential

Reproduction forbidden without Fibocom Wireless Inc. written authorization - All Rights Reserved.

EN-DC Combination	4G DL 4x4 MIMO	5G-NR UL 4x4 MIMO	4G UL	5G-NR UL
DC_2A-66A-66A-66A_n5A	2A-66A-66A-66A	-	2A, 66A	n5A
DC_13A-66A_n5A	66A	-	66A	n5A
DC_2A-13A_n5A	2A	-	2A	n5A
DC_5A-13A_n66A	-	n66A	5A, 13A	n66A
DC_5A-5A_n66A	-	n66A	5A	n66A
DC_5B_n66A	-	n66A	5A	n66A
DC_5A-13A_n2A	-	n2A	5A, 13A	n2A
DC_2A-13A_n2A	2A	n2A	13A	n2A
DC_5A-5A_n2A	-	n2A	5A	n2A
DC_5B_n2A	-	n2A	5A	n2A
DC_2A-13A-66A_n5A	2A-66A	-	2A, 66A	n5A
DC_13A-66A-66A_n5A	66A-66A	-	66A	n5A
DC_2A-2A-13A_n5A	2A-2A	-	2A	n5A
DC_2A-2A-13A_n66A	2A-2A	n66A	2A, 13A	n66A
DC_13A-66A-66A_n66A	66A-66A	n66A	13A	n66A
DC_2A-5A-5A_n66A	2A	n66A	2A, 5A	n66A
DC_5A-5A-66A_n66A	66A	n66A	5A	n66A
DC_2A-5B_n66A	2A	n66A	2A, 5A	n66A
DC_5B-66A_n66A	66A	n66A	5A	n66A
DC_2A-13A-66A_n2A	2A-66A	n2A	13A, 66A	n2A
DC_13A-66A-66A_n2A	66A-66A	n2A	13A, 66A	n2A
DC_2A-5A-5A_n2A	2A	n2A	5A	n2A
DC_5A-5A-66A_n2A	66A	n2A	5A, 66A	n2A
DC_2A-5B_n2A	2A	n2A	5A	n2A
DC_5B-66A_n2A	66A	n2A	5A, 66A	n2A
DC_2A-13A-66A-66A_n5A	2A-66A-66A	-	2A, 66A	n5A
DC_2A-2A-13A-66A_n5A	2A-2A-66A	-	2A, 66A	n5A
DC_2A-2A-13A-66A_n66A	2A-2A-66A	n66A	2A, 13A	n66A
DC_2A-13A-66A-66A_n66A	2A-66A-66A	n66A	2A, 13A	n66A
DC_2A-5A-66A-66A_n66A	2A-66A-66A	n66A	2A, 5A	n66A
DC_2A-5A-5A-66A_n66A	2A-66A	n66A	2A, 5A	n66A
DC_5A-5A-66A-66A_n66A	66A-66A	n66A	5A	n66A
DC_2A-5B-66A_n66A	2A-66A	n66A	2A, 5A	n66A
DC_5B-66A-66A_n66A	66A-66A	n66A	5A	n66A
DC_2A-13A-66A-66A_n2A	2A-66A-66A	n2A	13A, 66A	n2A
DC_2A-5A-5A-66A_n2A	2A-66A	n2A	5A, 66A	n2A
DC_2A-5B-66A_n2A	2A-66A	n2A	5A, 66A	n2A
DC_5B-66A-66A_n2A	66A-66A	n2A	5A, 66A	n2A
DC_2A-2A-5A-66A-66A_n5A	2A-2A-66A-66A	-	2A, 66A	n5A
DC_2A-2A-13A-66A-66A_n66A	2A-2A-66A-66A	n66A	2A, 13A	n66A
DC_2A-2A-5A-66A-66A_n66A	2A-2A-66A-66A	n66A	2A, 5A	n66A
DC_2A-5A-5A-66A-66A_n66A	2A-66A-66A	n66A	2A, 5A	n66A

Reproduction forbidden without Fibocom Wireless Inc. written authorization - All Rights Reserved.

EN-DC Combination	4G DL 4x4 MIMO	5G-NR UL 4x4 MIMO	4G UL	5G-NR UL
DC_2A-5B-66A-66A_n66A	2A-66A-66A	n66A	2A, 5A	n66A
DC_2A-5A-5A-66A-66A_n2A	2A-66A-66A	n2A	5A, 66A	n2A
DC_2A-5B-66A-66A_n2A	2A-66A-66A	n2A	5A, 66A	n2A
DC_13A-46A_n2A	-	n2A	13A	n2A
DC_66B_n5A	66B	-	66A	n5A
DC_66C_n5A	66C	-	66A	n5A
DC_2A-48A-66A_n5A	2A-48A-66A	-	2A,48A,66A	n5A
DC_2A-66B_n5A	2A-66B	-	2A,66A	n5A
DC_2A-13A-66B_n66A	2A-66B	-	2A,13A	n66A
DC_66B_n2A	66B	n2A	66A	n2A
DC_66C_n2A	66C	n2A	66A	n2A
DC_13A-66B_n2A	66B	n2A	13A,66A	n2A
DC_13A-66C_n2A	66C	n2A	13A,66A	n2A
DC_2A-48C_n5A	2A-48C	-	2A,48A	n5A
DC_48C-66A_n5A	48C-66A	-	48A,66A	n5A
DC_5A-66B_n2A	66B	n2A	5A,66A	n2A
DC_5B-66A_n2A	66A	n2A	5A,66A	n2A
DC_66A-66A-66A_n2A	66A-66A-66A	n2A	66A	n2A
DC_66A-66A-66A_n5A	66A-66A-66A	-	66A	n5A
DC_2A-13A-66A-66A_n2A	2A-66A-66A	n2A	13A,66A	n2A
DC_2A-2A-66A-66A_n66A	2A-2A-66A-66A	n66A	2A	n66A
DC_2A-48C-66A_n5A	2A-48C-66A	-	2A,48A	n5A
DC_2A-48D_n5A	2A-48D	-	2A,48A	n5A
DC_2A-5A-66A-66A_n2A	2A-66A-66A	n2A	5A,66A	n2A
DC_2A-5A-66A-66A_n66A	2A-66A-66A	n66A	2A,5A	n66A
DC_2A-48D-66A_n5A	2A-48D-66A	-	2A,48A,66A	n5A
DC_2A-48E_n5A	2A-48E	-	2A,48A	n5A
DC_2A-48E-66A_n5A	2A-66A,48E	-	2A,48A,66A	n5A
DC_13A-48A_n77A	48A	n77A	13A	n77A
DC_2A-48A_n77A	2A-48A	n77A	2A	n77A
DC_48A-66A_n77A	48A-66A	n77A	66A	n77A
DC_13A-48A-66A_n77A	48A-66A	n77A	13A,66A	n77A
DC_2A-48A-13A_n77A	2A-48A	n77A	2A,13A	n77A
DC_2A-48A-66A_n77A	2A-48A-66A	n77A	2A,66A	n77A
DC_48C_n5A	48A	-	48A	n5A
DC_66A-66A_n2A	66A-66A	n2A	66A	n2A
DC_2A-2A-66A_n66A	2A-2A-66A	n66A	2A	n66A
DC_2A-66A-66A_n2A	2A-66A-66A	n2A	66A	n2A
DC_2A-66A-66A_n66A	2A-66A-66A	n66A	2A	n66A
DC_48D_n5A	48D	-	48A	n5A
DC_48E_n5A	48E	-	48A	n5A

Fibocom Confidential

Reproduction forbidden without Fibocom Wireless Inc. written authorization - All Rights Reserved.

Note:

1. Marked * stands for EN-DC combination is in the plan.
2. 4G UL only support single carrier

2.5 Waring

2.5.1 Important Notice to OEM integrators

1. This module is limited to OEM installation ONLY.

2. This module is limited to installation in fixed applications, according to Part 2.1091(b).

3. The separate approval is required for all other operating configurations, including portable configurations with respect to Part 2.1093 and different antenna configurations

4. For FCC Part 15.31 (h) and (k): The host manufacturer is responsible for additional testing to verify compliance as a composite system. When testing the host device for compliance with Part 15 Subpart B, the host manufacturer is required to show compliance with Part 15 Subpart B while the transmitter module(s) are installed and operating. The modules should be transmitting and the evaluation should confirm that the module's intentional emissions are compliant (i.e. fundamental and out of band emissions). The host manufacturer must verify that there are no additional unintentional emissions other than what is permitted in Part 15 Subpart B or emissions are complaint with the transmitter(s) rule(s). The Grantee will provide guidance to the host manufacturer for Part 15 B requirements if needed.

Important Note

notice that any deviation(s) from the defined parameters of the antenna trace, as described by the instructions, require that the host product manufacturer must notify to Fibocom Wireless Inc. that they wish to change

the antenna trace design. In this case, a Class II permissive change application is required to be filed by the USI, or the host manufacturer can take responsibility through the change in FCC ID (new application) procedure followed by a Class II permissive change application.

End Product Labeling

When the module is installed in the host device, the FCC/IC ID label must be visible through a window on the final device or it must be visible when an access panel, door or cover is easily re-moved. If not, a second label must be placed on the outside of the final device that contains the following text: “Contains FCC ID: ZMOFM150NA”

“Contains IC: 21374-FM150NA “

FIBOCOM Confidential

Reproduction forbidden without Fibocom Wireless Inc. written authorization - All Rights Reserved.

The FCC ID/IC ID can be used only when all FCC/IC compliance requirements are met.

Antenna Installation

(1) The antenna must be installed such that **20** cm is maintained between the antenna and users,

(2) The transmitter module may not be co-located with any other transmitter or antenna.

(3) Only antennas of the same type and with equal or less gains as shown below may be used with this module. Other types of antennas and/or higher gain antennas may require additional authorization for operation.

(4)The max allowed antenna gain is 3.69dBi for external monopole antenna.

In the event that these conditions cannot be met (for example certain laptop configurations or co-location with another transmitter), then the FCC/IC authorization is no longer considered valid and the FCC ID/IC ID cannot be used on the final product. In these circumstances, the OEM integrator will be responsible for re-evaluating the end product (including the transmitter) and obtaining a separate FCC/IC authorization.

Manual Information to the End User

The OEM integrator has to be aware not to provide information to the end user regarding how to install or remove this RF module in the user's manual of the end product which integrates this module. The end user manual shall include all required regulatory information/warning as show in this manual.

2.5.2 FCC Statement

Federal Communication Commission Interference Statement

This device complies with Part 15 of the FCC Rules. Operation is subject to the following two conditions: (1) This device may not cause harmful interference, and (2) this device must accept any interference received, including interference that may cause undesired operation.

This equipment has been tested and found to comply with the limits for a Class B digital device, pursuant to Part 15 of the FCC Rules. These limits are designed to provide reasonable protection against harmful interference in a residential installation. This equipment generates, uses and can radiate radio frequency energy and, if not installed and used in accordance with the instructions, may cause harmful interference to radio communications. However, there is no guarantee that interference will not occur in a particular installation. If this equipment does cause harmful interference to radio or television reception, which can be determined by turning the equipment off and on, the user is encouraged to try to correct the interference by one of the following measures:

- Reorient or relocate the receiving antenna.

FIBOCOM Confidential

Reproduction forbidden without Fibocom Wireless Inc. written authorization - All Rights Reserved.

- Increase the separation between the equipment and receiver.
- Connect the equipment into an outlet on a circuit different from that to which the receiver is connected.
- Consult the dealer or an experienced radio/TV technician for help.

Any changes or modifications not expressly approved by the party responsible for compliance could void the user's authority to operate this equipment. This transmitter must not be co-located or operating in conjunction with any other antenna or transmitter.

This device is intended only for OEM integrators under the following conditions: (For module device use)

1) The antenna must be installed such that 20 cm is maintained between the antenna and users, and
2) The transmitter module may not be co-located with any other transmitter or antenna.
As long as 2 conditions above are met, further transmitter test will not be required. However, the OEM integrator is still responsible for testing their end-product for any additional compliance requirements required with this module installed.

Radiation Exposure Statement

This equipment complies with FCC radiation exposure limits set forth for an uncontrolled environment. This equipment should be installed and operated with minimum distance **20** cm between the radiator & your body.

2.5.3 IC Statement

Industry Canada Statement

This device complies with Industry Canada's licence-exempt RSSs. Operation is subject to the following two conditions:
(1) This device may not cause interference; and
(2) This device must accept any interference, including interference that may cause undesired operation of the device.

Le présent appareil est conforme aux CNR d'Industrie Canada applicables aux appareils radio exempts de licence. L'exploitation est autorisée aux deux conditions suivantes:
(1) l'appareil ne doit pas produire de brouillage, et
(2) l'utilisateur de l'appareil doit accepter tout brouillage radioélectrique subi, même si le brouillage est susceptible d'en compromettre le fonctionnement."

FIBOCOM Confidential

Radiation Exposure Statement

This equipment complies with IC radiation exposure limits set forth for an uncontrolled environment. This equipment should be installed and operated with minimum distance 20 cm between the radiator & your body.

Déclaration d'exposition aux radiations:

Cet équipement est conforme aux limites d'exposition aux rayonnements ISED établies pour un environnement non contrôlé. Cet équipement doit être installé et utilisé avec un minimum de 20 cm de distance entre la source de rayonnement et votre corps.

This device is intended only for OEM integrators under the following conditions: (For module device use)

1) The antenna must be installed such that 20 cm is maintained between the antenna and users, and
2) The transmitter module may not be co-located with any other transmitter or antenna.
As long as 2 conditions above are met, further transmitter test will not be required. However, the OEM integrator is still responsible for testing their end-product for any additional compliance requirements required with this module installed.

Cet appareil est conçu uniquement pour les intégrateurs OEM dans les conditions suivantes: (Pour utilisation de dispositif module)

1) L'antenne doit être installée de telle sorte qu'une distance de 20 cm est respectée entre l'antenne et les utilisateurs, et
2) Le module émetteur peut ne pas être coïmplanté avec un autre émetteur ou antenne.

Tant que les 2 conditions ci-dessus sont remplies, des essais supplémentaires sur l'émetteur ne seront pas nécessaires. Toutefois, l'intégrateur OEM est toujours responsable des essais sur son produit final pour toutes exigences de conformité supplémentaires requis pour ce module installé.

IMPORTANT NOTE:

In the event that these conditions can not be met (for example certain laptop configurations or colocation with another transmitter), then the Canada authorization is no longer considered valid and the IC ID can not be used on the final product. In these circumstances, the OEM integrator will be responsible for re-evaluating the end product (including the transmitter) and obtaining a separate Canada authorization.

FIBOCOM Confidential

Reproduction forbidden without Fibocom Wireless Inc. written authorization - All Rights Reserved.

NOTE IMPORTANTE:

Dans le cas où ces conditions ne peuvent être satisfaites (par exemple pour certaines configurations d'ordinateur portable ou de certaines co-localisation avec un autre émetteur), l'autorisation du Canada n'est plus considéré comme valide et l'ID IC ne peut pas être utilisé sur le produit final. Dans ces circonstances, l'intégrateur OEM sera chargé de réévaluer le produit final (y compris l'émetteur) et l'obtention d'une autorisation distincte au Canada.

End Product Labeling

This transmitter module is authorized only for use in device where the antenna may be installed such that 20 cm may be maintained between the antenna and users. The final end product must be labeled in a visible area with the following: “Contains IC: 21374-FM150NA”.

Plaque signalétique du produit final

Ce module émetteur est autorisé uniquement pour une utilisation dans un dispositif où l'antenne peut être installée de telle sorte qu'une distance de 20cm peut être maintenue entre l'antenne et les utilisateurs. Le produit final doit être étiqueté dans un endroit visible avec l'inscription suivante: "Contient des IC: 21374-FM150NA ".

Manual Information To the End User

The OEM integrator has to be aware not to provide information to the end user regarding how to install or remove this RF module in the user’s manual of the end product which integrates this module.

The end user manual shall include all required regulatory information/warning as show in this manual.

Manuel d'information à l'utilisateur final

L'intégrateur OEM doit être conscient de ne pas fournir des informations à l'utilisateur final quant à la façon d'installer ou de supprimer ce module RF dans le manuel de l'utilisateur du produit final qui intègre ce module.

Le manuel de l'utilisateur final doit inclure toutes les informations réglementaires requises et avertissements comme indiqué dans ce manuel.

2.6 Application Framework

The peripheral applications for FM150 module is shown in Figure 2-1:

FIBOCOM Confidential

Reproduction forbidden without Fibocom Wireless Inc. written authorization - All Rights Reserved.

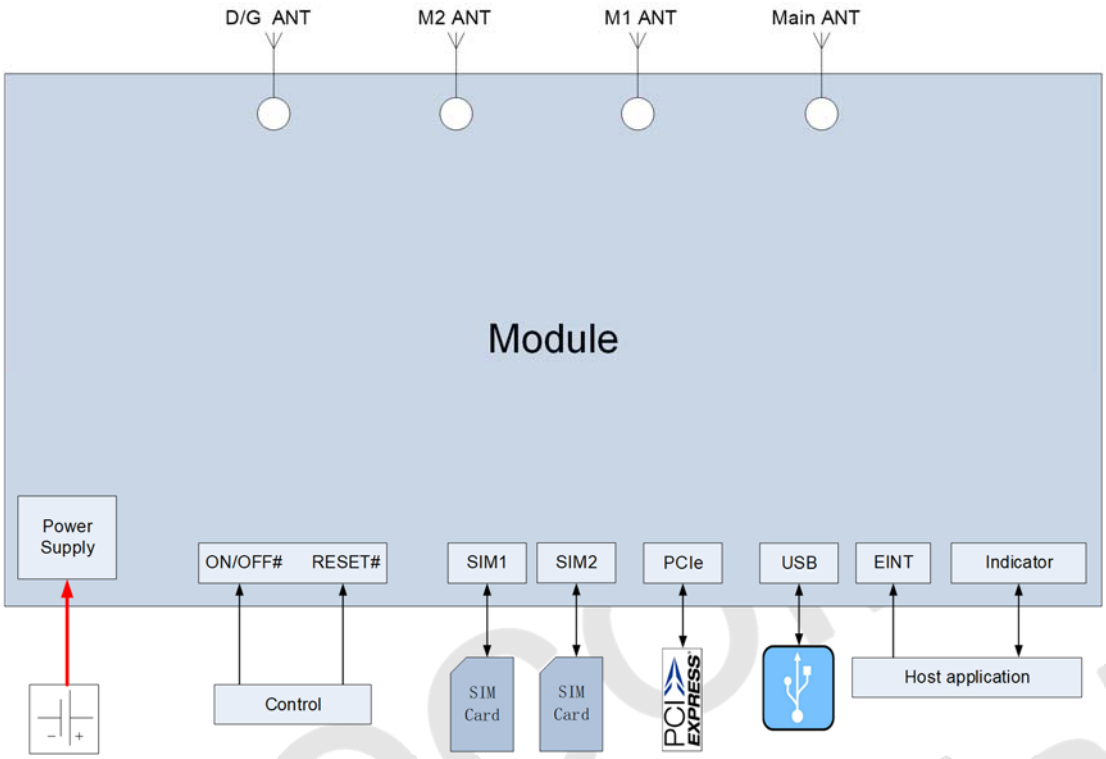

Figure2-1 Application Framework

3 Application Interface

3.1 M.2 Interface

The FM150 module applies standard M.2 Key-B interface, with a total of 75 pins.

FIBOCOM Confidential

Reproduction forbidden without Fibocom Wireless Inc. written authorization - All Rights Reserved.

3.1.1 Pin Map

74	VCC	CONFIG_2	75
72	VCC	NC	73
70	VCC	GND	71
68	FORCE_USB_BOOT(1.8V)	CONFIG_1	69
66	SIM1_DETECT(1.8V)	RESET#(1.8V)	67
64	COEX_1(1.8V)	ANTCTL3(1.8V)	65
62	COEX_2(1.8V)	ANTCTL2(1.8V)	63
60	WLAN_TX_EN(1.8V)	ANTCTL1(1.8V)	61
58	RFFE_SDATA(1.8V)	LAA_TX_EN(1.8V)	59
56	RFFE_SCLK(1.8V)	GND	57
54	PEWAKE# (3.3/1.8V)	REFCLKP	55
52	CLKREQ# (3.3/1.8V)	REFCLKN	53
50	PERST# (3.3/1.8V)	GND	51
48	UIM2_PWR	PERp0	49
46	UIM2_RESET	PERn0	47
44	UIM2_CLK	GND	45
42	UIM2_DATA	PETp0	43
40	SIM2_DETECT1.8V	PETn0	41
38	NC	GND	39
36	UIM1_PWR	USB_SS-Rx+	37
34	UIM1_DATA	USB_SS-Rx−	35
32	UIM1_CLK	GND	33
30	UIM1_RESET	USB_SS-Tx+	31
28	I2S_WA（1.8V）	USB_SS-Tx−	29
26	W_DISABLE2#(3.3/1.8V)	GND	27
24	I2S_TX（1.8V	DPR(3.3/1.8V)	25
22	I2S_RX（1.8V）	WOWWAN#(3.3/1.8V)	23
20	I2S_CLK（1.8V）	CONFIG_0	21
	Notch	Notch	
	Notch	Notch	
	Notch	Notch	
	Notch	Notch	
10	LED1#(3.3V OD)	GND	11
8	W_DISABLE1#(3.3/1.8V)	USB D-	9
6	FULL_CARD_POWER_OFF#(3.3/1.8V)	USB D+	7
4	VCC	GND	5
2	VCC	GND	3
		CONFIG_3	1

Figure 3-1 Pin Map

Note:

Pin “Notch” represents the gap of the gold fingers.

Reproduction forbidden without Fibocom Wireless Inc. written authorization - All Rights Reserved.

3.1.2 Pin Definition

The pin definition is as follows:

Pin	Pin Name	I/O	Reset Value	Pin Description	Type
1	CONFIG_3	O	NC	NC, FM150 M.2 module is configured as the WWAN – PCIe, USB_SS interface type.	-
2	VCC	PI	-	Power input	Power Supply
3	GND	-	-	GND	Power Supply
4	VCC	PI	-	Power input	Power Supply
5	GND	-	-	GND	Power Supply
6	FULL_CARD_ POWER_OFF#	I	PU	Module power on/off input, internal 20KΩ pull up Power on: High/Floating Power off: Low	CMOS 3.3/1.8V
7	USB D+	I/O	-	USB Data Plus	0.3-3V
8	W_DISABLE1#	I	PU	WWAN Disable, active low	CMOS 3.3/1.8V
9	USB D-	I/O	-	USB Data Minus	0.3-3V
10	LED1#	O	T	System status LED, Output open drain	-
11	GND	-	-	GND	Power Supply
12	Notch	-	-	Notch	-
13	Notch	-	-	Notch	-
14	Notch	-	-	Notch	-
15	Notch	-	-	Notch	-
16	Notch	-	-	Notch	-
17	Notch	-	-	Notch	-
18	Notch	-	-	Notch	-
19	Notch	-	-	Notch	-
20	I2S_CLK	O	PD	I2S Serial clock, Reserved	CMOS 1.8V
21	CONFIG_0	-	NC	NC, FM150 M.2 module is configured as the WWAN – PCIe, USB_SS interface type.	-
22	I2S_RX	I	PD	I2S Serial receive data, Reserved	CMOS 1.8V

FIBOCOM Confidential

Reproduction forbidden without Fibocom Wireless Inc. written authorization - All Rights Reserved.

Pin	Pin Name	I/O	Reset Value	Pin Description	Type
23	WOWWAN#	O	PD	Wake up host	CMOS 1.8V
24	I2S_TX	O	PD	I2S Serial transmit data, Reserved	CMOS 1.8V
25	DPR	I	PU	Dynamic power control for SAR interrupt detection, active low. Reserved.	CMOS 3.3/1.8V
26	W_DISABLE2#	I	PU	GNSS disable, active low, Reserved	CMOS 3.3/1.8V
27	GND	-	-	GND	Power Supply
28	I2S_WA	O	PD	I2S Word alignment/select, Reserved	CMOS 1.8V
29	USB_SS -TX-	O	-	USB super speed transmit data minus	-
30	UIM1_RESET	O	L	SIM1 reset signal	CMOS 1.8V/3V
31	USB_SS -TX+	O	-	USB super speed transmit data plus	-
32	UIM1_CLK	O	L	SIM1 clock Signal	CMOS 1.8V/3V
33	GND	-	-	GND	Power Supply
34	UIM1_DATA	I/O	L	SIM1 data input/output	CMOS 1.8V/3V
35	USB_SS-RX -	I	-	USB super speed receive data minus	-
36	UIM1_PWR	PO	-	SIM1 power supply, 3V/1.8V	CMOS 1.8V/3V
37	USB_SS-RX+	I	-	USB super speed receive data plus	CMOS 1.8V
38	NC	-	-	-	-
39	GND	-	-	GND	Power Supply
40	SIM2_DETECT	I	PU	SIM2 detect, internal pull up(390KΩ), default active high	CMOS 1.8V
41	PETn0	O	-	PCIe TX differential signals negative	-
42	UIM2_DATA	I/O	L	SIM2 data input/output	CMOS 3V/1.8V
43	PETp0	O	-	PCIe TX differential signals positive	-
44	UIM2_CLK	O	L	SIM2 clock signal	CMOS 3V/1.8V

FIBOCOM Confidential

Reproduction forbidden without Fibocom Wireless Inc. written authorization - All Rights Reserved.

Pin	Pin Name	I/O	Reset Value	Pin Description	Type
45	GND	-	-	GND	Power Supply
46	UIM2_RESET	O	L	CMOS 3V/1.8V	CMOS 3V/1.8V
47	PERn0	I	-	PCIe RX Differential Signals Negative	-
48	UIM2_PWR	PO	-	SIM2 power supply, 3V/1.8V	CMOS 3V/1.8V
49	PERp0	I	-	PCIe RX Differential Signals Positive	-
50	PERST#	I	PD	Asserted to reset module PCIe interface default. Active low, internal pull up(10KΩ).	CMOS 3.3V/1.8V
51	GND	-	-	GND	Power Supply
52	CLKREQ#	O	T	Asserted by device to request a PCIe reference clock be available (active clock state) in order to transmit data. It also used by L1 PM Sub states mechanism, asserted by either host or device to initiate an L1 exit. Active low, open drain output and should add external pull up on platform.	CMOS 3.3V/1.8V
53	REFCLKN	I	-	PCIe Reference Clock signal Negative	-
54	PEWAKE#	O	T	Asserted to wake up system and reactivate PCIe link from L2 to L0, it depends on system whether supports wake up functionality. Active low, open drain output and should add external pull up on platform.	CMOS 3.3V/1.8V
55	REFCLKP	I	-	PCIe Reference Clock signal Positive	-
56	RFFE_SCLK	O	PD	MIPI Interface Tunable ANT, RFFE clock	CMOS 1.8V
57	GND	-	-	GND	Power Supply
58	RFFE_SDATA	I/O	PD	MIPI Interface Tunable ANT, RFFE data	CMOS 1.8V

FIBOCOM Confidential

Reproduction forbidden without Fibocom Wireless Inc. written authorization - All Rights Reserved.

Pin	Pin Name	I/O	Reset Value	Pin Description	Type
59	LAA_TX_EN	O	PD	WL_LAA_TX_EN Set HIGH level to blank/isolate 5 GHz WLAN LNAs when n79 transmits power over 10dBm.	CMOS 1.8V
60	WLAN_TX_EN	I	-	Receive WLAN_TX_EN (HIGH level) to blank/isolate n79 LNAs when external 5 GHz WLAN TX on.	CMOS 1.8V
61	ANTCTL1	O	PD	Tunable ANT CTRL1, Control signal1	CMOS 1.8V
62	COEX_2	I	PD	Wireless Coexistence between WWAN and WiFi/BT modules, based on BT-SIG coexistence protocol. UART receive signal (WWAN module side) specifically use for this function, reserved.	CMOS 1.8V
63	ANTCTL2	O	PD	Tunable ANT CTRL2, Control signal2	CMOS 1.8V
64	COEX_1	O	PD	Wireless Coexistence between WWAN and WiFi/BT modules, based on BT-SIG coexistence protocol. UART transmit signal (WWAN module side) specifically use for this function, reserved.	CMOS 1.8V
65	ANTCTL3	O	PD	Tunable ANT CTRL3, Control signal3	Power Supply
66	SIM1_DETECT	I	PU	SIM1 Detect, internal pull up(390KΩ), Default active high	CMOS 1.8V
67	RESET#	I	PU	WWAN reset input, internal pull up, active low	CMOS 1.8V
68	FORCE_USB_BOOT	I	-	Pull up to 1.8V during power on, module will enter the USB download mode, used for update the software of module. Floating or pulling low, it will enter the normal user mode as 5G communication.	CMOS 1.8V
69	CONFIG_1	O	GND	GND, FM150 M.2 module is configured as the WWAN – PCIe, USB_SS interface type.	-

FIBOCOM Confidential

Reproduction forbidden without Fibocom Wireless Inc. written authorization - All Rights Reserved.

Pin	Pin Name	I/O	Reset Value	Pin Description	Type
70	VCC	PI	-	Power input	Power Supply
71	GND	-	-	GND	Power Supply
72	VCC	PI	-	Power input	Power Supply
73	NC	-	-		-
74	VCC	PI	-	Power input	Power Supply
75	CONFIG_2	O	NC	NC, FM150 M.2 module is configured as the WWAN – PCIe, USB_SS interface type.	-

Reset Value: The initial status after module reset, not the status when working.

H: High Voltage Level

L: Low Voltage Level

PD: Pull-Down

PU: Pull-Up

T: Tristate

OD: Open Drain

PI: Power Input

PO: Power Output

Notes:

1. The unused pins can be left floating.
2. All interfaces that support 3.3V voltage are based on the input voltage of + 3.3V power supply. When the input voltage range of the power supply changes from 3.135V to 4.4V, the corresponding interface voltage changes accordingly.

3.2 Power Supply

The power interface of FM150 module as shown in the following table:

Pin	Pin Name	I/O	Pin Description	DC Parameter (V)		
				Minimum Value	Typical Value	Maximum Value
2, 4, 70, 72, 74	VCC	PI	Power supply input	3.135	3.8	4.4
36	UIM1_PWR	PO	USIM power supply	-	1.8V/3V	-
48	UIM2_PWR	PO	USIM power supply	-	1.8V/3V	-

FIBOCOM Confidential

Reproduction forbidden without Fibocom Wireless Inc. written authorization - All Rights Reserved.

FM150 module uses PCIe interface, according to the PCIe specification, the PCIe Vmain should be used as the +3.3V power source, not the Vaux. The Vaux is the PCIe backup power source and it is not sufficient as the power supply. In addition, the external DC/DC power supply should not be used, because the external power cannot control the module status through the PCIe protocol.

3.2.1 Power Supply

The FM150 module should be powered through the VCC pins, with the continuous current ability of above 2.5A , and the power supply design is shown in Figure 3-2:

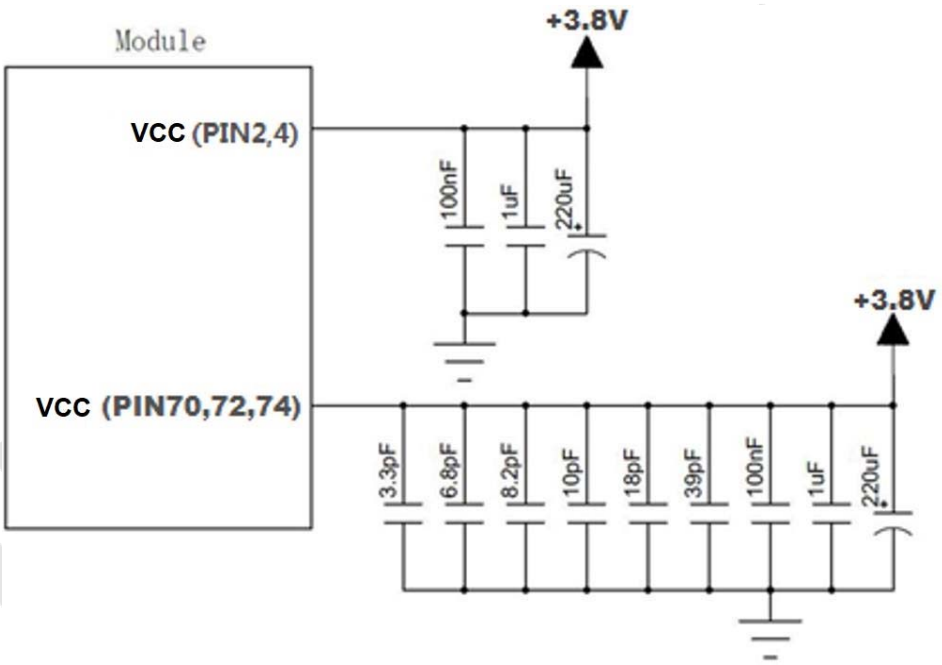

Figure 3-2 Power Supply Design

The filter capacitor design for power supply as shown in the following table:

Recommended capacitance	Application	Description
220uF x 2	Voltage-stabilizing capacitors	Reduce power fluctuations of the module in operation, requiring capacitors with low ESR. ● LDO or DC/DC power supply requires the capacitor of no less than 440uF. ● The capacitor for battery power supply can be reduced to 100~200uF.
1uF, 100nF	Digital signal noise	Filter out the interference generated from the clock and digital signals.
39pF, 33pF	700/800, 850/900 MHz frequency band	Filter out low frequency band RF interference

Reproduction forbidden without Fibocom Wireless Inc. written authorization - All Rights Reserved.

Recommended capacitance	Application	Description
18pF, 10pF, 8.2pF, 6.8pF, 3.3pF	1500/1700/1800/1900, 2100/2300, 2500/2600MHz, 3500/3700MHz, 5GHz frequency band	Filter out medium/high frequency band RF interference

The stable power supply can ensure the normal operation of FM150 module, and the ripple of the power supply should be less than 300mV in design. Because module supports 7CA download and EN-DC, when module operates with the maximum data transfer throughput, the maximum operating current can reach to upper 2500mA. It requests the power source voltage should not be lower than 3.135V, otherwise module may shut down or restart. The power supply requirement is shown in Figure 3-3:

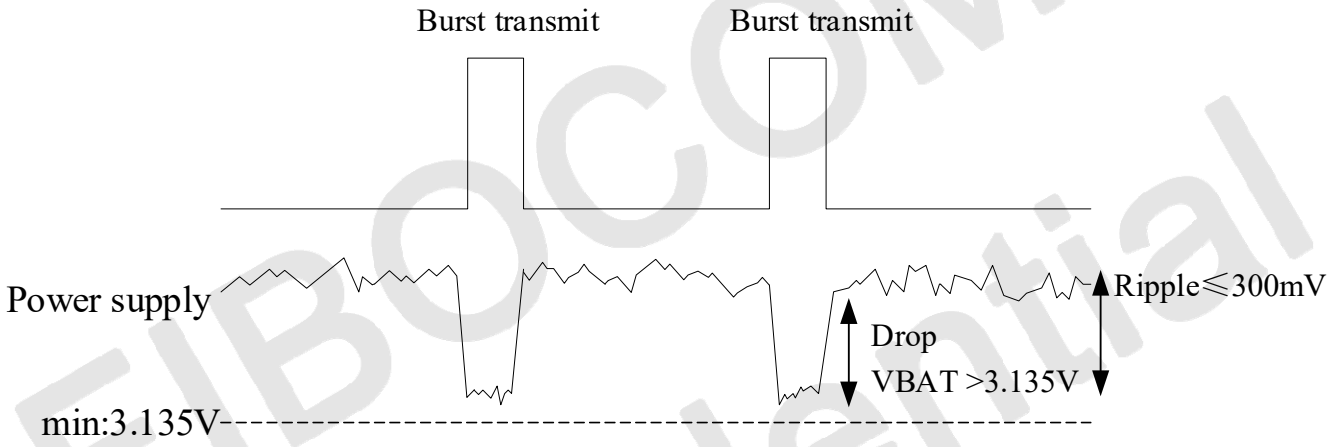

Figure 3-3 Power Supply Requirement

3.2.2 Logic level

The FM150 module 1.8V logic level definition as shown in the following table:

Parameters	Minimum	Typical	Maximum	Unit
1.8V logic level	1.71	1.8	1.89	V
V_{IH}	1.3	1.8	1.89	V
V_{IL}	-0.3	0	0.3	V

The FM150 module 3.3V logic level definition as shown in the following table:

Parameters	Minimum	Typical	Maximum	Unit
3.3V logic level	3.135	3.3	3.465	V
V_{IH}	2.3	3.3	3.465	V
V_{IL}	-0.3	0	0.3	V

Reproduction forbidden without Fibocom Wireless Inc. written authorization - All Rights Reserved.

3.2.3 Power Consumption

In the condition of 3.8V power supply, the FM150 power consumption as shown in the following table:

Parameters	Mode	Condition	Typical Current	Unit	Note
I_{off}	Power off	Power supply, module power off	100	uA	-
I_{IDLE}	WCDMA	DRX=8	17.5	mA	-
	TDD LTE	DPC(Default Paging Cycle)=#128	17.8	mA	-
	FDD LTE	DPC(Default Paging Cycle)=#128	18.5	mA	-
	NR FDD		TBD	mA	-
	NR TDD		TBD	mA	-
	Radio Off	AT+CFUN=4 Flight Mode	16	mA	-
I_{SLEEP}	WCDMA	DRX=8	2.5	mA	-
	LTE FDD	DPC(Default Paging Cycle)=#128	2.5	mA	-
	LTE TDD	DPC(Default Paging Cycle)=#128	2.7	mA	-
	NR FDD		TBD	mA	-
	NR TDD		TBD	mA	-
	Radio Off	AT+CFUN=4, Flight mode, USB disconnection.	1.6	mA	-
$I_{WCDMA-RMS}$	WCDMA	WCDMA Data call Band 1 @+23.5dBm	650	mA	-
		WCDMA Data call Band 2 @+23.5dBm	546	mA	-
		WCDMA Data call Band 4 @+23.5dBm	708	mA	-

FIBOCOM Confidential

Reproduction forbidden without Fibocom Wireless Inc. written authorization - All Rights Reserved.

Parameters	Mode	Condition	Typical Current	Unit	Note
		WCDMA Data call Band 5 @+23.5dBm	470	mA	-
		WCDMA Data call Band 8 @+23.5dBm	486	mA	-
$I_{LTE-RMS}$	LTE FDD	LTE FDD Data call Band 2 @+23dBm	635	mA	-
		LTE FDD Data call Band 4 @+23dBm	659	mA	-
		LTE FDD Data call Band 5 @+23dBm	471	mA	-
		LTE FDD Data call Band 7 @+23dBm	650	mA	-
		LTE FDD Data call Band 12 @+23dBm	461	mA	-
		LTE FDD Data call Band 13 @+23dBm	461	mA	-
		LTE FDD Data call Band 14 @+23dBm	471	mA	-
		LTE FDD Data call Band 17 @+23dBm	464	mA	-
		LTE FDD Data call Band 25 @+23dBm	645	mA	-
		LTE FDD Data call Band 26 @+23dBm	502	mA	-
		LTE FDD Data call Band 30 @+22dBm	735	mA	-
		LTE FDD Data call Band 66 @+23dBm	680	mA	-
		LTE FDD Data call Band 71 @+23dBm	571	mA	-

FIBOCOM Confidential

Reproduction forbidden without Fibocom Wireless Inc. written authorization - All Rights Reserved.

Parameters	Mode	Condition	Typical Current	Unit	Note
	LTE TDD	LTE TDD Data call Band 41 @+23dBm	469	mA	-
		LTE TDD Data call Band 42 @+23dBm	508	mA	-
		LTE TDD Data call Band 43 @+23dBm	391	mA	-
		LTE TDD Data call Band 48 @+23dBm	464	mA	-
$I_{ENDC-RMS}$	FDD data RMS Current	EN-DC Data call B66+n2 @20dBm+20dBm	883	mA	-
		EN-DC Data call B66+n5 @20dBm+20dBm	848	mA	-
		EN-DC Data call 66A_n7A @20dBm+20dBm	993	mA	-
		EN-DC Data call 2A_n12A @20dBm+20dBm	799	mA	-
		EN-DC Data call 66A_n25A @20dBm+20dBm	957	mA	-
		EN-DC Data call B7A_N66A @20dBm+20dBm	1022	mA	-
		EN-DC Data call B2A_N71A @20dBm+20dBm	639	mA	-
	TDD data (HPUE) RMS Current	EN-DC Data call B2A_N41A @23dBm+23dBm	1229	mA	-
		EN-DC Data call B7A_N78A @23dBm+23dBm	1099	mA	-

Note:

The data above is an average value obtained by testing some samples base on 25℃.

FIBOCOM Confidential

Reproduction forbidden without Fibocom Wireless Inc. written authorization - All Rights Reserved.

3.3 Control Signal

The FM150 module provides three control signals for power on/off and reset operations, the pin defined as shown in the following table:

Pin	Pin Name	I/O	Reset Value	Functions	Type
6	FULL_CARD_POWER_OFF#	I	PU	Module power on/off input, internal 20KΩ pull up Power on: High/Floating Power off: Low	3.3/1.8V
67	RESET#	I	PU	WWAN reset input, internal pull up, active low	1.8V
50	PERST#	I	PD	Asserted to reset module. Active low, internal pull up(10KΩ)	CMOS 3.3/1,8V

Note:

RESET # and PERST # need to be controlled by independent GPIO, and must not be shared with other devices on the host. RESET # and PERST # are sensitive signals. PCB layout should be far away from radio frequency interference. PCB traces need to be protected by grounding. Do not route traces near the edges of PCBs. Coaxial modules are reset due to ESD problems.

3.3.1 Module Start-Up

3.3.1.1 Start-up Circuit

When the FULL_CARD_POWER_OFF# pin and RESET# pin are floating or connect to an external 3.3V/1.8V, the module will booting up. AP (Application Processor) controls the module start-up. Recommended the FULL_CARD_POWER_OFF# and RESET# GPIO port should use a reset value is low or pull down port and reserved external pull-down resistance. The circuit design is shown in Figure3-4:

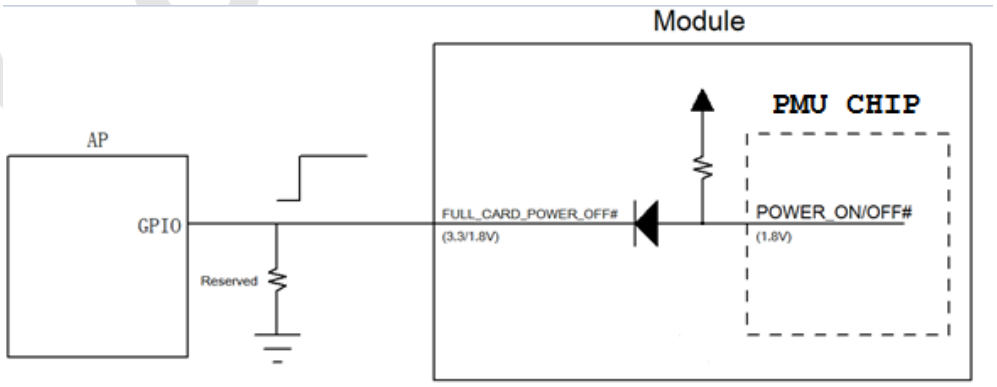

Figure 3-4 Circuit for Module Start-up Controlled by AP

Reproduction forbidden without Fibocom Wireless Inc. written authorization - All Rights Reserved.

3.3.1.2 Start-up Timing Sequence

When power supply is ready, the PMU of module will power on and start initialization process by pulling high both FCPO#(Pin6) and RESET#(Pin67) signal, After about 30s, the initialization process of the module will be completed. The start-up timing is shown in Figure 3-5:

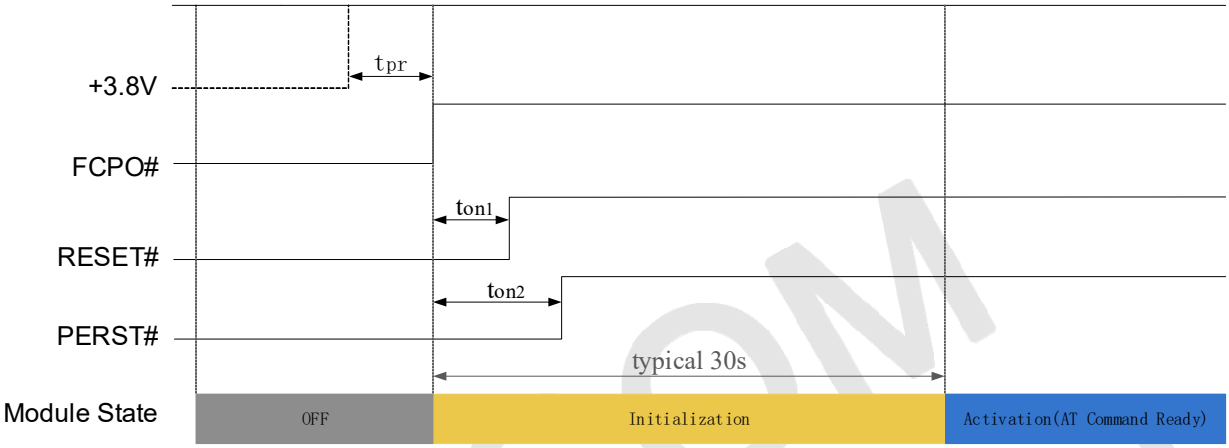

Figure 3-5 Timing Control for Start-up

Index	Min.	Recommended	Max.	Comments
t_{pr}	0ms	-	-	The delay time of power supply rising from 0V up to 3.135V. If power supply always ready, it can be ignored.
t_{on1}	0ms	-	-	RESET# should be de-asserted after FCPO#.
t_{on2}	50ms	100ms	-	The time delay of PERST# de-asserted after FCPO#, PERST# must always be the last to get de-asserted.

Notes:

1. When using PCIe as the data transmission interface, PERST # is connected to the host, please refer to the control sequence in the figure above.
2. When using USB interface only, PERST # is left floating, ignore the control sequence in the figure above about PERST #.

3.3.2 Module Shutdown

Module can be shut down by following control:

Shutdown Control	Action	Condition
recommend	Sending AT+CPWROFF=0 command, and then Pull down FCPO# pin	Normal run
Hardware	Pull down FCPO# pin	Fit for abnormal status, no response after sent the AT+CPWROFF=0.

Reproduction forbidden without Fibocom Wireless Inc. written authorization - All Rights Reserved.

By sending AT+CPWROFF=0 command, the module will start the finalization process (the reverse process of initialization), and it will be completed after tsd time (tsd is the time which AP receive OK of "AT+CPWROFF=0", if there is no response, max tsd is 5s). In the finalization process, the module will save the network, SIM card and some other parameters from memory, do the logout, then clear the memory and shut down PMU. The recommend control timing is shown in Figure 3-6:

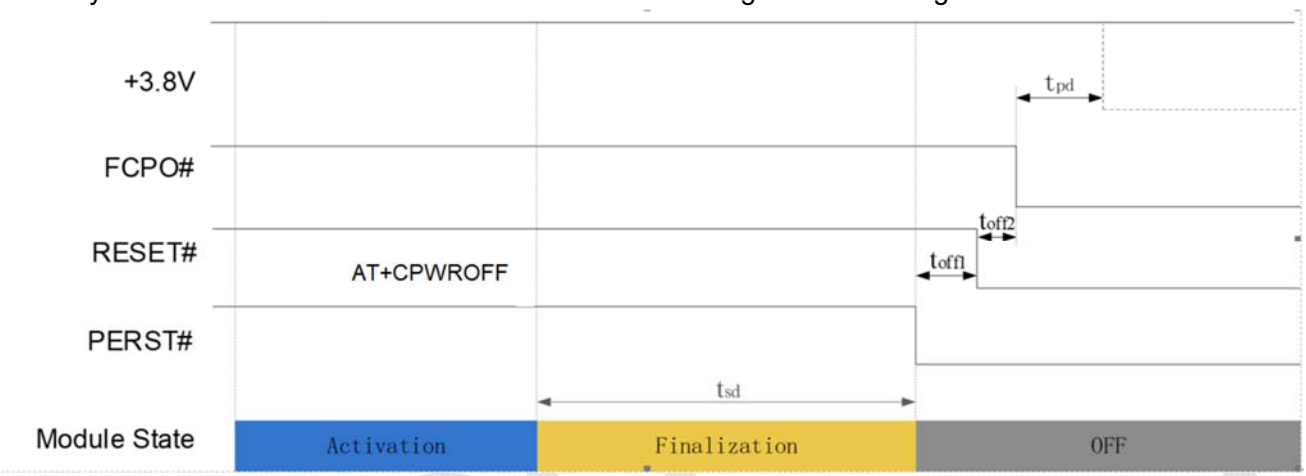

Figure 3-6 Software control power off timing

Index	Min.	Recommended	Max.	Comments
t_{off1}	16ms	20ms	-	RESET# should be asserted after PERST#
t_{off2}	0	-	-	FCPO# should be asserted after RESET#
t_{pd}	10ms	100ms	-	+3.8V power supply goes down time. If power supply is always on, it can be ignored.

Notes:

1. When using PCIe as the data transmission interface, PERST # is connected to the host, please refer to the control sequence in the figure above.
2. When using USB interface only, PERST # is left floating, ignore the control sequence in the figure above about PERST #.

3.3.3 Module Reset

The FM150 module can reset to its initial status by pulling down the RESET# signal for more than 20ms (30ms is recommended), and module will restart after RESET# signal is released. When customer executes RESET# function, the PMU will power off inside the module. The recommended circuit design is shown in the Figure 3-7:

Reproduction forbidden without Fibocom Wireless Inc. written authorization - All Rights Reserved.

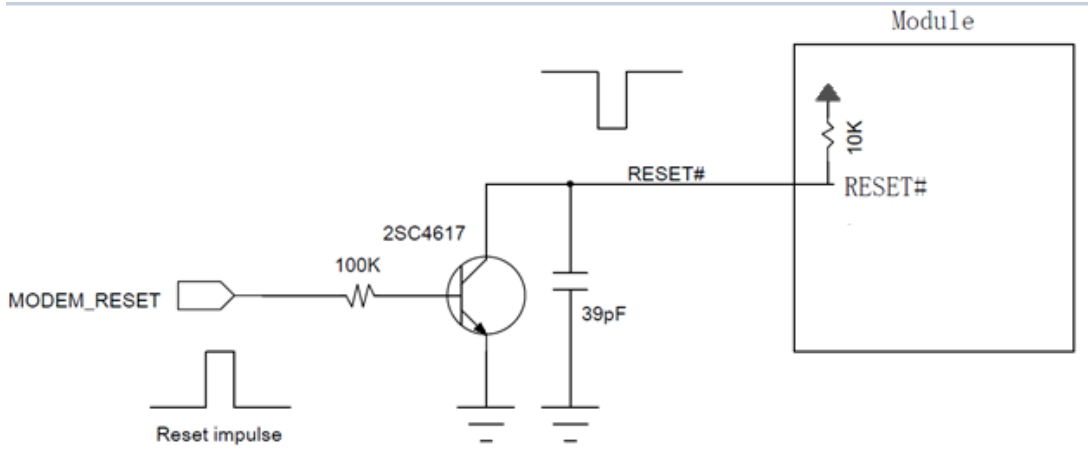

Figure 3-7 Recommended Design for Reset Circuit

There are two reset control timings as below:

- Reset timing 1st in Figure 3-8, PMU of module internal always on in reset sequence, recommend using in FW upgrade and module recovery;
- Reset timing 2nd in Figure 3-9, PMU of module internal will be off in reset sequence (including whole power off and power on sequence, t_{sd} can refer section 3.3.2), recommend using in system warm boot.

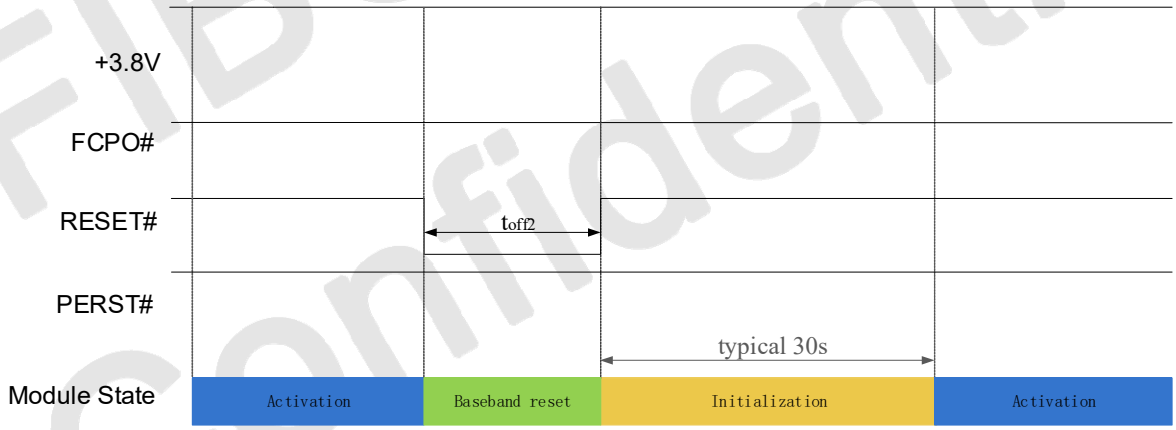

Figure 3-8 Reset timing 1st

FIBOCOM Confidential

Reproduction forbidden without Fibocom Wireless Inc. written authorization - All Rights Reserved.

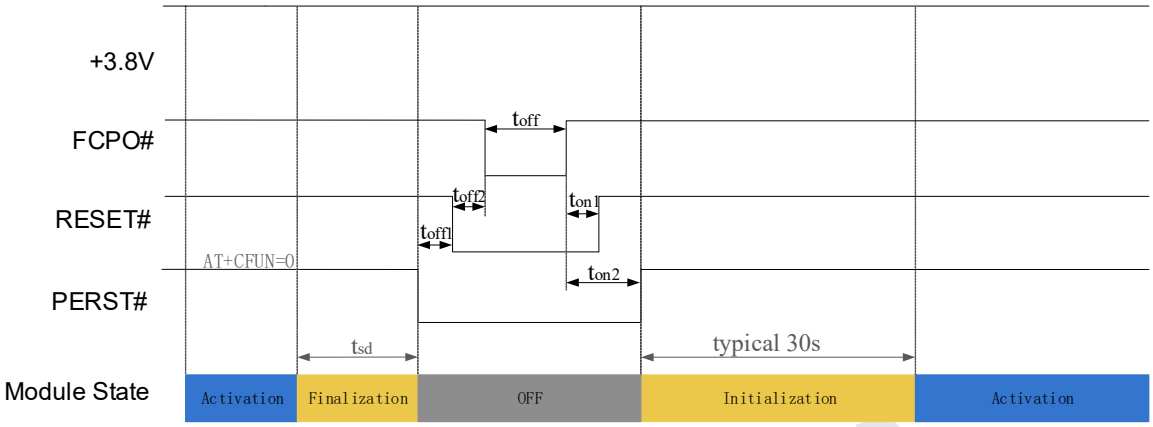

Figure 3-9 Reset timing2nd

Index	Min.	Recommended	Max.	Comments
t_{off1}	16ms	20ms	-	RESET# should be asserted after PERST#, refer section 3.3.2
t_{off2}	0	-	-	FCPO# should be asserted after RESET#, refer section 3.3.2
t_{off}	500ms	2s	-	Time to allow the WWAN module to fully discharge any residual voltages before the pin could be de-asserted again. This is required for both Pre-OS as well as Runtime flow.
t_{on1}	0	-	-	RESET# should be de-asserted after FCPO#, refer section 3.3.1.2
t_{on2}	50ms	100ms	-	The time delay of PERST# de-asserted after FCPO#, PERST# must always be the last to get de-asserted. refer section 3.3.1.2

Notes:

1. RESET# is a sensitive signal, it's recommended to add a filter capacitor close to the module. In case of PCB layout, the RESET# signal lines should keep away from the RF interference and protected by GND. Also, the RESET# signal lines shall neither near the PCB edge nor route on the surface planes to avoid module from reset caused by ESD problems.
2. If the PCIe and USB interfaces connected to the host, and USB is used as the data transmission interface, PERST# please do not follow the timing.

FIBOCOM Confidential

Reproduction forbidden without Fibocom Wireless Inc. written authorization - All Rights Reserved.

3.3.4 PCIe Link State

3.3.4.1 D0 L1.2

Module supports PCIe goes into D0 L1.2 state in Win10 system. The D0→D0 L1.2@S0/S0ix→D0 timing is shown in figure 3-10:

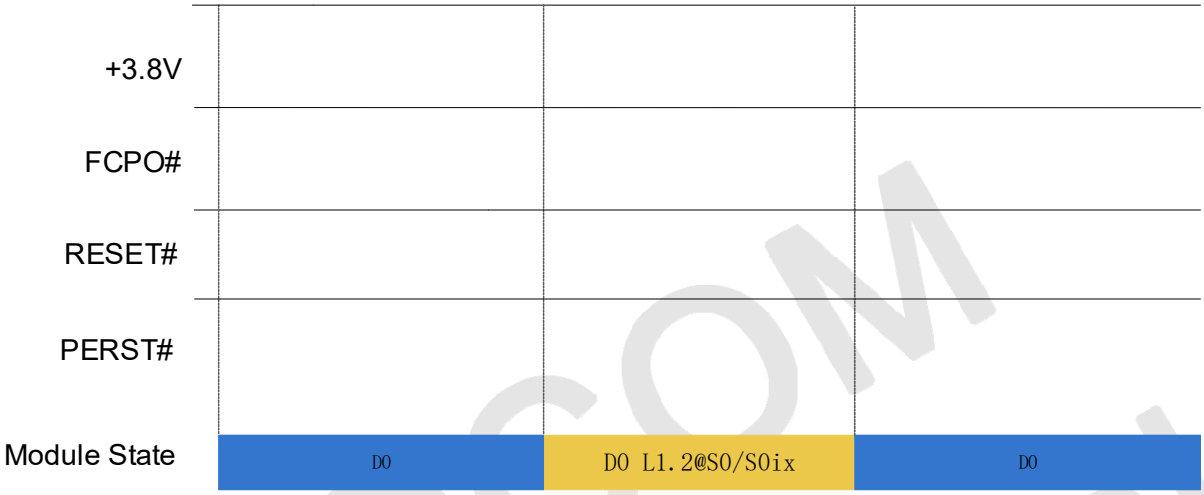

Figure 3-10 D0 L1.2 timing

Note:

When USB is used as data transfer interface in Android/Linux OS, there is no PCIe link state. But when USB goes into suspend it also needs to follow the timing above (If PERST# is floating, don't control PERST#).

3.3.4.2 D3cold L2

Module supports PCIe goes into D3cold L2 state in Win10 system. The D0→D3cold L2@S0/S0ix →D0 timing is shown in figure 3-11:

FIBOCOM Confidential

Reproduction forbidden without Fibocom Wireless Inc. written authorization - All Rights Reserved.

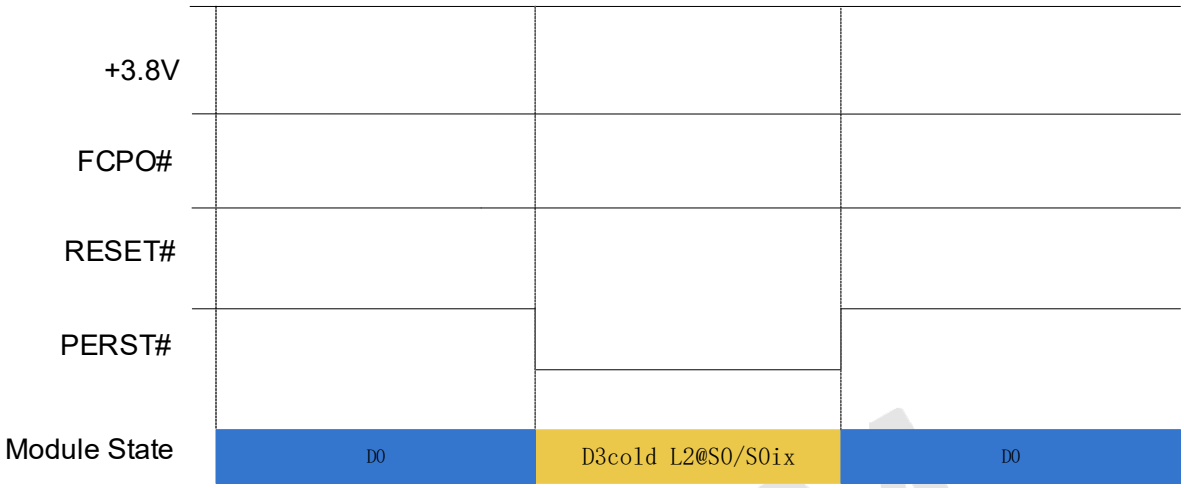

Figure 3-11 D3cold L2 timing

Note:

When USB is used as data transfer interface in Android/Linux OS, there is no PCIe link state, so don't need to follow timing above.

3.3.5Timing Application

The recommended timing application in Win10 OS is as below table:

System status		Timing Application
S0ix (Modem standby)	D0 L1.2	Refer to section 3.3.4.1 Figure 3-10 D0 L1.2 Timing
	D3cold L2	Refer to section 3.3.4.2 Figure 3-11 D3cold L2 timing
S3,S4,S5	Power on (back to S0)	Refer to section 3.3.1.2 Figure 3-5 Timing control for start-up
	Power off (out of S0)	Refer to section 3.3.2 Figure 3-6 Software power off timing
G3 boot	Power on	Refer to section 3.3.1.2 Figure 3-5 Timing control for start-up
Warm boot		Refer to section 3.3.3 Figure 3-9 Reset timing 2nd
Modem FW upgrade / Modem recovery		Refer to section 3.3.3 Figure 3-8 Reset timing 1st

The recommended timing application in Android/Linux OS is as below table:

System status	Timing Application
Power on	Refer to section 3.3.1.2 Figure 3-5 Timing control for start-up
Shut down	Refer to section 3.3.2 Figure 3-6 Software power off timing

Reproduction forbidden without Fibocom Wireless Inc. written authorization - All Rights Reserved.

System status	Timing Application
Connect standby	Refer to section 3.3.4.1 Figure 3-10 D0 L1.2 timing
Restart	Refer to section 3.3.3 Figure 3-9 Reset timing 2nd
Modem FW upgrade / Modem recovery	Refer to section 3.3.3 Figure 3-8 Reset timing 1st

3.4 PCIe & USB

3.4.1 PCIe Interface

FM150 module supports PCIe Gen3, one lane for data transmission channel. It is also compatible with PCIe Gen1/Gen2.After FM150 module is inserted into host, PCIe interface can work with the driver, then enumerate 4 ports, such as AT command port(mhi_DUN)、capture QXDM LOG port(mhi_DIAG)、transport QMU message port(mhi_QMIO)、report GNSS NEMA data port(mhi_GNSS).

3.4.1.1 PCIe Interface Definition

Pin#	Pin Name	I/O	Reset Value	Description	Type
41	PETn0	O	-	PCIe TX Differential signals Negative	-
43	PETP0	O	-	PCIe TX Differential signals Positive	-
47	PERn0	I	-	PCIe RX Differential signals NegativeBit0	-
49	PERP0	I	-	PCIe RX Differential signals Positive	-
53	REFCLKN	I	-	PCIe Reference Clock signal Negative	-
55	REFCLKP	I	-	PCIe Reference Clock signal Positive	-
50	PERST#	I	PU	Asserted to reset module PCIe interface default. Active low, internal pull up(10KΩ).	1.8V/3.3V
52	CLKREQ#	O	L	Request a PCIe reference clock be available (active clock state) in order to transmit data. It	1.8V/3.3V

Reproduction forbidden without Fibocom Wireless Inc. written authorization - All Rights Reserved.

Pin#	Pin Name	I/O	Reset Value	Description	Type
				also used by L1 PM Sub states mechanism, asserted by either host or device to initiate an L1 exit. Active low, internal pull up (10KΩ).	
54	PEWAKE#	O	L	Wake up system and reactivate PCIe link from L2 to L0, it depends on system whether supports wake up functionality. Active low, open drain output and should add external pull up on platform.	1.8V/3.3V

3.4.1.2 PCIe Interface Application

The reference circuit is shown in Figure 3-12:

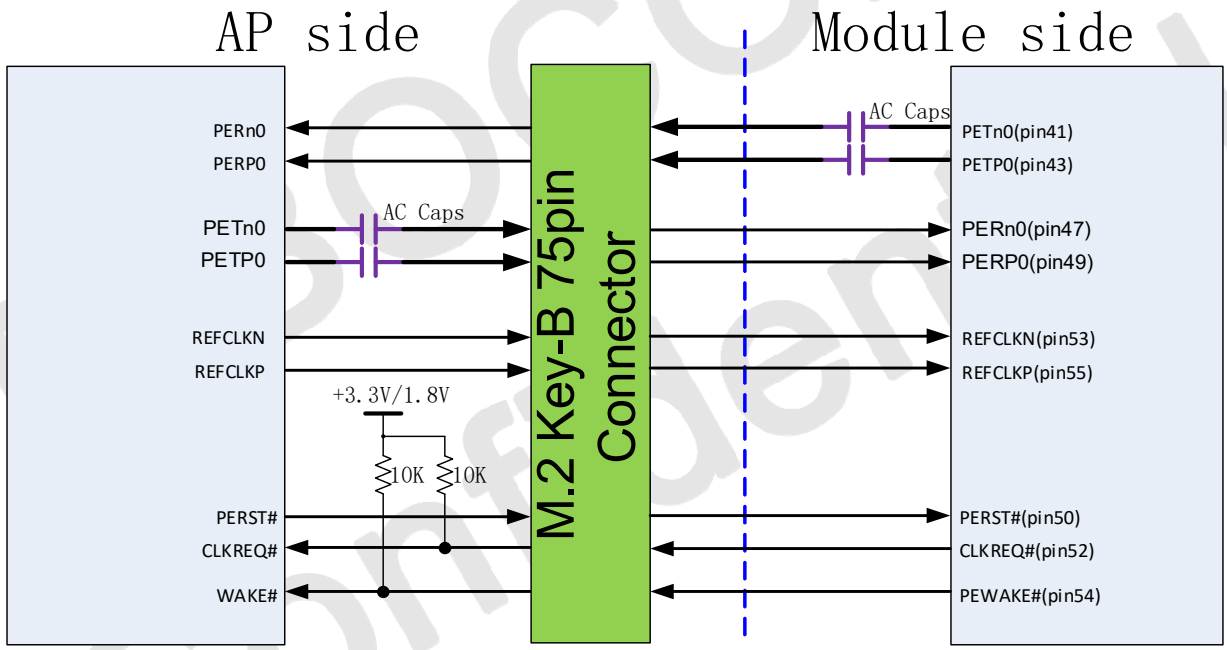

Figure 3-12 Reference Circuit for PCIe Interface

FM150 module supports PCIe Gen3 interface, including three difference pairs: transmit pair TXP/N, receiving pair RXP/N and clock pair CLKP/N.

PCIe can achieve the maximum transmission rate of 8 GT/s, and must strictly follow the rules below in PCB Layout:

- The differential signal pair lines shall be parallel and equal in length;
- The differential signal pair lines shall be short if possible and be controlled within 15 inch(380 mm) for AP end;
- The impedance of differential signal pair lines is recommended to be 100 ohm, and can be controlled to 80～120 ohm in accordance with PCIe protocol;

Reproduction forbidden without Fibocom Wireless Inc. written authorization - All Rights Reserved.

- It shall avoid the discontinuous reference ground, such as segment and space;
- When the differential signal lines go through different layers, the via hole of grounding signal should be close to that of signal, and generally, each pair of signals require 1-3 grounding signal via holes and the lines shall never cross the segment of plane;
- Try to avoid bended lines and avoid introducing common-mode noise in the system, which will influence the signal integrity and EMI of difference pair. As shown in Figure 3-13, the bending angle of all lines should be equal or greater than 135°, the spacing between difference pair lines should be larger than 20mil, and the line caused by bending should be greater than 1.5 times line width at least. When a serpentine line is used for length match with another line, the bended length of each segment shall be at least 3 times the line width (≥3W). The largest spacing between the bended part of the serpentine line and another one of the differential lines must be less than 2 times the spacing of normal differential lines (S1<2S);

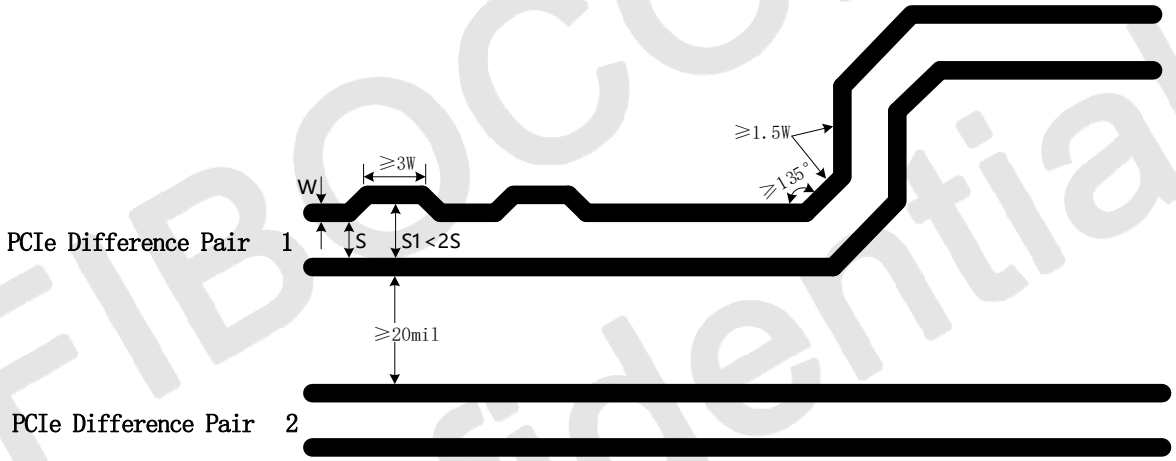

Figure 3-13 Requirement of PCIe Line

- The difference in length of two data lines in difference pair should be within 5mil, and the length match is required for all parts. When the length match is conducted for the differential lines, the designed position of correct match should be close to that of incorrect match, as shown in Figure 3-14. However, there is no specific requirements for the length match of transmit pair and receiving pair, that is, the length match is only required in the internal differential lines rather than between different difference pairs. The length match should be close to the signal pin and pass the small-angle bending design.

FIBOCOM Confidential

Reproduction forbidden without Fibocom Wireless Inc. written authorization - All Rights Reserved.

Figure 3-14 Length Match Design of PCIe Difference Pair

3.4.2 USB Interface

The FM150 module supports USB2.0 which is compatible with USB High-Speed (480 Mbit/s) and USB Full-Speed (12 Mbit/s).It supports USB3.1 Gen2 using for 5G high speed data throughput at the same time. For the USB timing and electrical specification of FM150 module, please refer to Universal Serial Bus Specification 2.0" and "Universal Serial Bus Specification 3.1".

When module inserted PC, USB can enumerate three ACM and three NCM ports in Android/Linux system, the ports can be configured in practical application.

3.4.2.1 USB Interface Definition

Pin#	Pin Name	I/O	Description	Type
7	USB D+	I/O	USB Data Plus	0.3-3V, USB2.0
9	USB D-	I/O	USB Data Minus	0.3-3V, USB2.0
29	USB_SS_TX-	O	USB Super speed transmit data minus	-
31	USB_SS _TX+	O	USB Super speed transmit data plus	-
35	USB_SS _RX-	I	USB Super speed receive data minus	-
37	USB_SS _RX+	I	USB Super speed receive data plus	-

3.4.2.2 USB2.0 Interface Application

The reference circuit is shown in Figure 3-15:

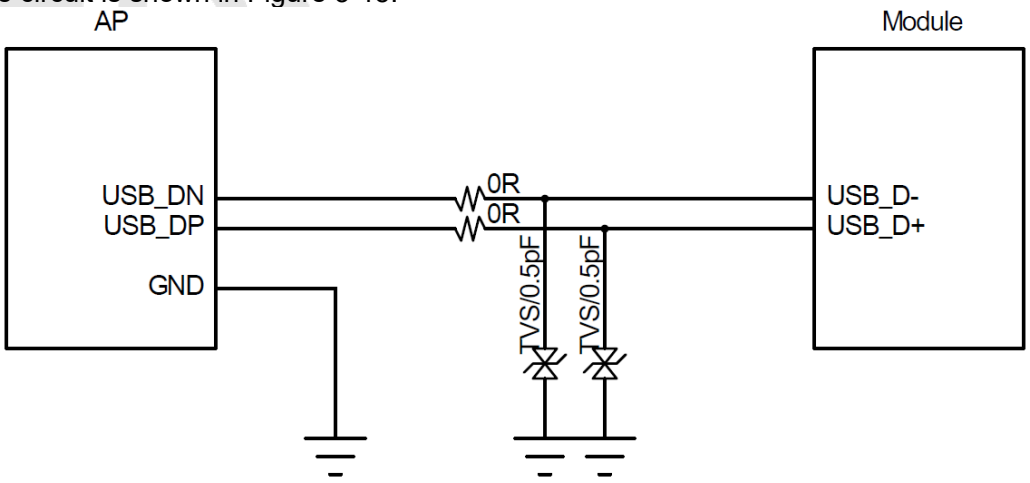

Figure 3-15 Reference Circuit for USB 2.0 Interface

Reproduction forbidden without Fibocom Wireless Inc. written authorization - All Rights Reserved.

Since the module supports USB 2.0 High-Speed, it is required to use TVS diodes with equivalent capacitance of 1pF or smaller ones on the USB_D-/D+ differential signal lines, it is recommended to use 0.5pF TVS diodes.

USB_D- and USB_D+ are high speed differential signal lines with the maximum transfer rate of480 Mbit/s, so the following rules shall be followed carefully in the case of PCB layout:

- USB_D- and USB_D+ signal lines should have the differential impedance of 90±10 ohms.
- USB_D- and USB_D+ signal cables must be less than 2mm in length and parallel, the right angle routing should be avoided.
- USB_D- and USB_D+ signal lines should be routed on the layer that is adjacent to the ground layer, and wrapped with GND vertically and horizontally.

3.4.2.3 USB3.0 Interface Application

The reference circuit is shown in Figure 3-16:

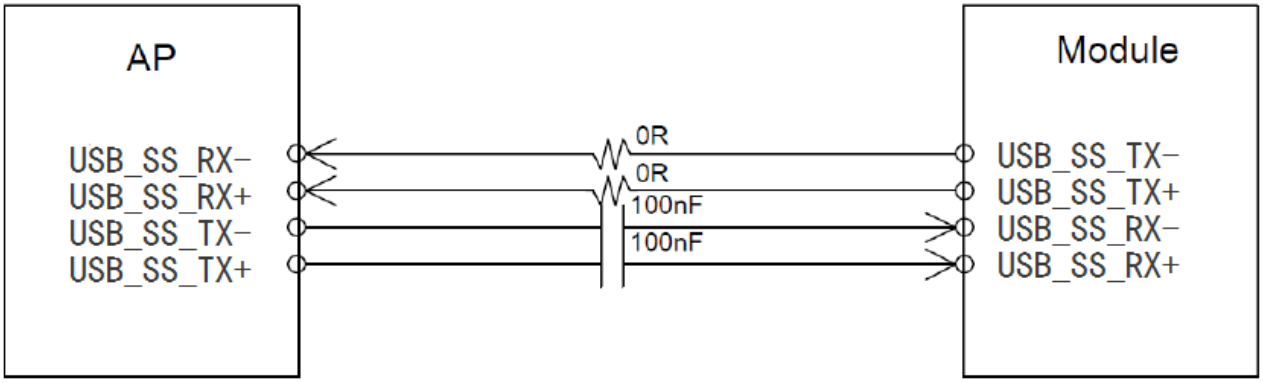

Figure 3-16 Reference Circuit for USB 3.1 Interface

USB 3.1 Gen2 signals are super speed differential signal lines with the maximum transfer rate of 10Gbps.So the following rules shall be followed carefully in the case of PCB layout:

- USB_SS_TX-/USB_SS_TX+ and USB_SS_RX-/ USB_SS_RX+ are two pairs differential signal lines, the differential impedance should be controlled as 90±10 ohms.
- For TX differential line, the + and-traces must be parallel, equal length, and the length difference is less than 0.7mm, avoiding right-angle traces.
- For the RX differential line, the + and-traces must be parallel, equal length, and the length difference is less than 0.7mm. Avoid right-angle traces.
- TX and RX traces must be parallel, equal length, and the length difference is less than 10mm. Avoid right-angle traces.The two pairs differential signal lines should be routed on the layer that is adjacent to the ground layer, and wrapped with GND vertically and horizontally.

Reproduction forbidden without Fibocom Wireless Inc. written authorization - All Rights Reserved.

3.5 USIM Interface

The FM150 module supports dual SIM card single standby, has dual built-in USIM card interface, which supports 1.8V and 3V SIM cards.

3.5.1 USIM1 Pins

The USIM1 pins description as shown in the following table:

Pin	Pin Name	I/O	Reset Value	Description	Type
36	UIM1_PWR	PO	-	USIM1 power supply	1.8V/3V
30	UIM1_RESET	O	L	USIM1 reset	1.8V/3V
32	UIM1_CLK	O	L	USIM1 clock	1.8V/3V
34	UIM1_DATA	I/O	L	USIM1 data, internal pull up(20KΩ)	1.8V/3V
66	SIM1_DETECT	I	PU	USIM1 card detect, internal 390K pull-up. Active high, and high level indicates SIM card is inserted; and low level indicates SIM card is detached.	1.8V

3.5.2 USIM2 Pins

The USIM2 pins description is shown in the following table:

Pin	Pin Name	I/O	Reset Value	Description	Type
48	UIM2_PWR	PO	-	USIM2 power supply	1.8V/3V
46	UIM2_RESET	O	L	USIM2 reset	1.8V/3V
44	UIM2_CLK	O	L	USIM2 clock	1.8V/3V
42	UIM2_DATA	I/O	L	USIM2 data, internal pull up(20KΩ)	1.8V/3V
40	SIM2_DETECT	I	PU	USIM2 card detect, internal 390K pull-up. Active high, and high level indicates SIM card is inserted; and low level indicates SIM card is detached.	1.8V

FIBOCOM Confidential

Reproduction forbidden without Fibocom Wireless Inc. written authorization - All Rights Reserved.

3.5.3 USIM Interface Circuit

3.5.3.1 N.C. SIM Card Slot

The reference circuit design for N.C. (Normally Closed) SIM card slot is shown in Figure 3-17:

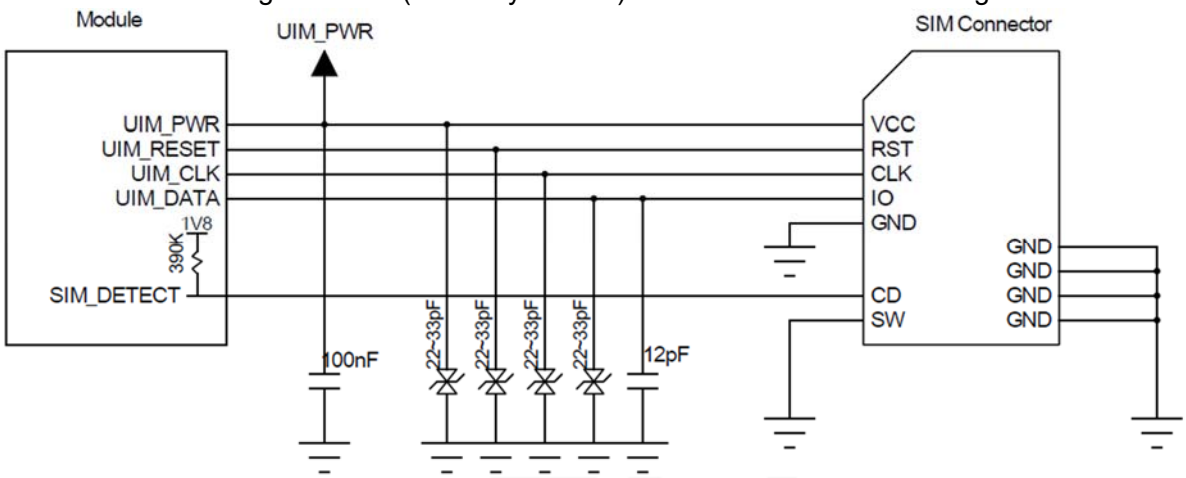

Figure 3-17 Reference Circuit for N.C. SIM Card Slot

The principles of the N.C.SIM card slot are described as follows:

- When the SIM card is detached, it connects the short circuit between CD and SW pins, and drives the SIM_DETECT pin low.
- When the SIM card is inserted, it connects an open circuit between CD and SW pins, and drives the SIM_DETECT pin high.

3.5.3.2 N.O. SIM Card Slot

The reference circuit design for N.O. (Normally Open) SIM card slot is shown in Figure 3-18:

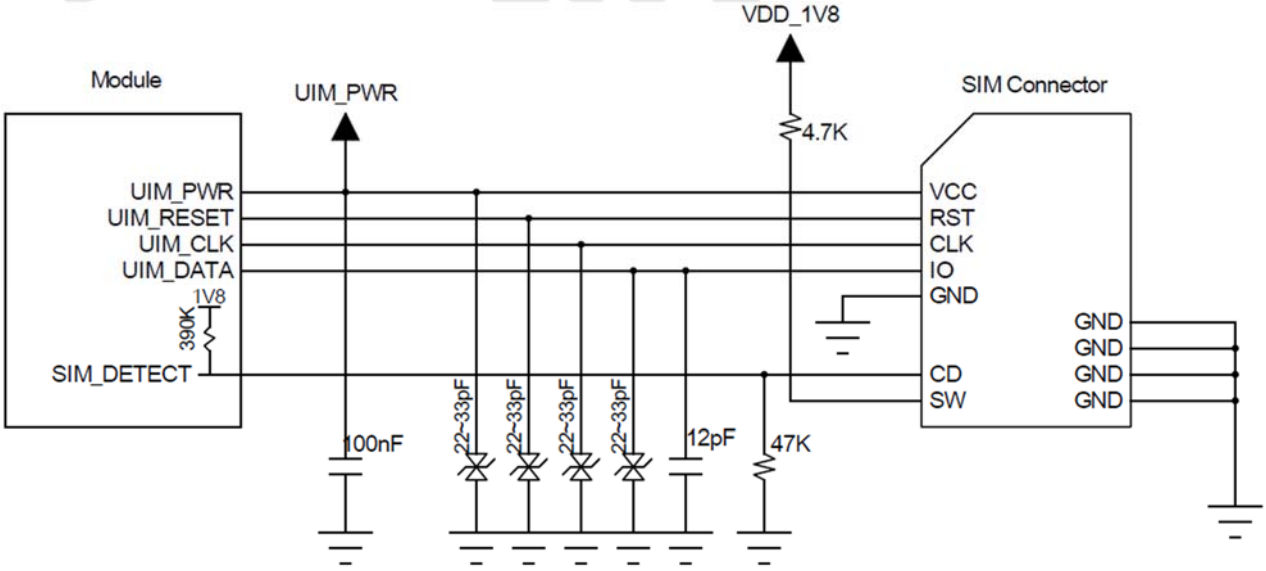

Figure 3-18 Reference Circuit for N.O. SIM Card Slot

The principles of the N.O.SIM card slot are described as follows:

- When the SIM card is detached, it connects an open circuit between CD and SW pins, and drives the

Reproduction forbidden without Fibocom Wireless Inc. written authorization - All Rights Reserved.

SIM_DETECT pin low.

- When the SIM card is inserted, it connects the short circuit between CD and SW pins, and drives the SIM_DETECT pin high.

3.5.4 USIM Hot-Plugging

The FM150 module supports the SIM card hot-plugging function, which determines whether the SIM card is inserted or detached by detecting the SIM_DETECT pin state of the SIM card slot.

The SIM card hot-plugging function can be configured by “AT+MSMPD” command, and the description for AT command is shown in the following table:

AT Command	Hot-plugging Detection	Function Description
AT+MSMPD=1	Enable	Default value, the SIM card hot-plugging detection function is enabled. The module can detect whether the SIM card is inserted or not through the SIM_DETECT pin state.
AT+MSMPD=0	Disable	The SIM card hot-plugging detect function is disabled. The module reads the SIM card when starting up, and the SIM_DETECT status will not be detected.

After the SIM card hot-plugging detection function is enabled, the module detects that the SIM card is inserted when the SIM_DETECT pin is high, then executes the initialization program and finishes the network registration after reading the SIM card information. When the SIM_DETECT pin is low, the module determines that the SIM card is detected and does not read the SIM card.

Note:

By default, SIM_DETECT is active-high, which can be switched to active-low by the AT command. Please refer to the AT Commands Manual for the AT command.

3.5.5 USIM Design

The SIM card circuit design shall meet the EMC standards and ESD requirements with the improved capability to resist interference, to ensure that the SIM card can work stably. The following guidelines should be noted in case of design:

- The SIM card slot placement should near the module as close as possible, and away from the RF antenna, DC/DC power supply, clock signal lines, and other strong interference sources.

Reproduction forbidden without Fibocom Wireless Inc. written authorization - All Rights Reserved.

- The SIM card slot with a metal shielding housing can improve the anti-interference ability.
- The trace length between the SIM card slot and the module should not exceed 100mm, or it could reduce the signal quality.
- The UIM_CLK and UIM_DATA signal lines should be isolated by GND to avoid crosstalk interference. If it is difficult for the layout, the whole SIM signal lines should be wrapped with GND as a group at least.
- The filter capacitors and ESD devices for SIM card signals should be placed near to the SIM card slot, and the ESD devices with 22~33pF capacitance should be used.

3.6 Status Indicator

The FM150 module provides two signals to indicate the operating status of the module, and the status indicator pins as shown in the following table:

Pin	Pin Name	I/O	Reset Value	Pin Description	Type
10	LED1#	O	T	System status LED, drain output.	CMOS 3.3V
23	WOWWAN#	O	PD	Module wakes up Host (AP), Reserved	CMOS 1.8V

3.6.1 LED1# Signal

The LED#1 signal is used to indicate the operating status of the module, and the detailed description as shown in the following table:

Module Status	LED1# Signal
RF function ON	Low level (LED On)
RF function OFF	High level (LED Off)

The LED driving circuit is shown in figure 3-19:

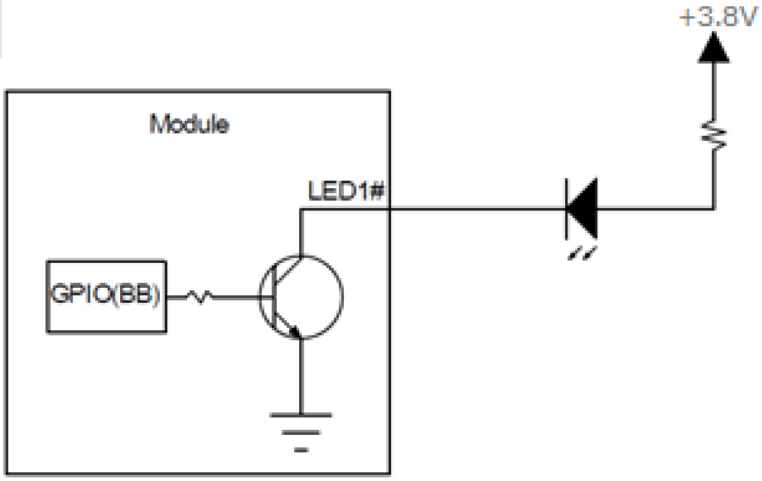

FIBOCOM Confidential

Reproduction forbidden without Fibocom Wireless Inc. written authorization - All Rights Reserved.

Figure 3-19 LED Driving Circuit

Note:

Module internal rated current sink <10mA.The resistance of LED current-limiting resistor is selected according to the driving voltage and the driving current.

3.6.2 WOWWAN#

The WOWWAN# signal is used to wake the Host (AP) when there comes the data request. The definition of WOWWAN# signal is as follows:

Operating Mode	WOWWAN# Signal
SMS or data requests	Pull low 1s then pull high (pulse signal).
Idle/Sleep	High level

The WOWWAN# timing is shown in Figure 3-20:

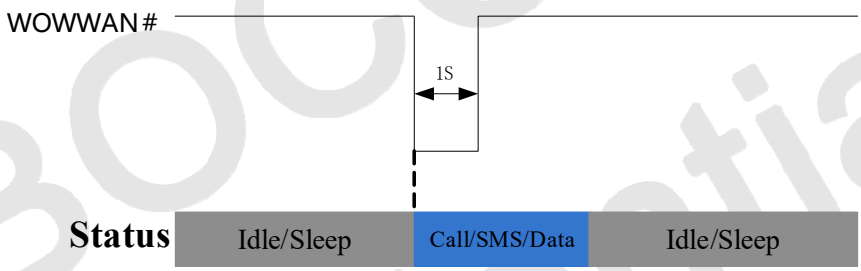

Figure 3-20 WOWWAN# Timing

3.7 Interrupt Control

The FM150 module provides 3 interrupt signals, and the pin definition is as follows:

Pin	Pin Name	I/O	Reset Value	Pin Description	Type
8	W_DISABLE1#	I	PU	Enable/Disable RF network	1.8V/3.3V
25	DPR	I	PU	Body SAR detection	1.8V/3.3V
26	W_DISABLE2#	I	PU	GNSS Disable signal.Reserved	1.8V/3.3V

3.7.1 W_DISABLE

The module provides a hardware pin to enable/disable WWAN RF function, need AT+GTFMODE=1 to enable this pin and the function can also be controlled by the AT command. The module enters the Flight mode after the RF function is disabled. The definition of W_DISABLE1# signal is as below table:

FIBOCOM Confidential

Reproduction forbidden without Fibocom Wireless Inc. written authorization - All Rights Reserved.

W_DISABLE1# signal	Function
High/Floating	WWAN function is enabled, the module exits the Flight mode.
Low	WWAN function is disabled, the module enters Flight mode.

The function of GNSS can be enabled or disabled by hardware pin.

W_DISABLE2# signal	Function
High/Floating during power on	Enable GNSS
Pull Low during power on	Disable GNSS

Note:

The function of W_DISABLE1# can be customized, please refer to the software porting guide.

3.7.2 BODYSAR

The FM150 module supports Body SAR function by detecting the DPR pin. The voltage level of DPR is high by default, and when the SAR sensor detects the closing to human body, the DPR signal will be pulled down. As a result, the module then lowers down its emission power to its default threshold value, thus reducing the RF radiation on the human body. The threshold of emission power can be set by the AT Commands. The definition of DPR signal as shown in the following table:

DPR signal	Function
High/Floating	The module keeps the default emission power.
Low	Lower the maximum emission power to the threshold value of the module.

3.8 ANT Tunable Interface

The module supports ANT Tuner interfaces with two different control modes, i.e. MIPI interface and 3bit GPO interface. Through cooperating with external antenna tuner switch via the port of ANT Tuner, it can flexibly configure the bands of antenna to improve the antenna's working efficiency and save space for the antenna.

Pin	Pin Name	I/O	Pin Description	Type
56	RFFE_SCLK	O	Tunable ANT control, MIPI Interface, RFFE clock	CMOS 1.8V
58	RFFE_SDATA	I/O	Tunable ANT control, MIPI Interface, RFFE data	CMOS 1.8V

FIBOCOM Confidential

Reproduction forbidden without Fibocom Wireless Inc. written authorization - All Rights Reserved.

Pin	Pin Name	I/O	Pin Description	Type
61	ANTCTL1	O	Tunable ANT control, GPO interface, control signal1	CMOS 1.8V
63	ANTCTL2	O	Tunable ANT control, GPO interface, control signal2	CMOS 1.8V
65	ANTCTL3	O	Tunable ANT control, GPO interface, control signal3	CMOS 1.8V

3.9 Configuration Interface

The FM150 module provides four configuration pins for the configuration as the WWAN-PCIe, USB3.1 type M.2 module:

Pin	Pin Name	I/O	Reset Value	Pin Description	Type
1	CONFIG_3	O	-	NC	-
21	CONFIG_0	O	-	NC	-
69	CONFIG_1	O	L	Internally connected to GND	-
75	CONFIG_2	O	-	NC	-

The M.2 module configuration as the following table:

Config_0 (pin21)	Config_1 (pin69)	Config_2 (pin75)	Config_3 (pin1)	Module Type and Main Host Interface	Port Configuration
NC	GND	NC	NC	WWAN-PCIe Gen3, USB3.1 Gen2	Vendor defined

Please refer to PCI Express M.2 Specification Rev1.1" for more details.

4 Radio Frequency

4.1 RF Interface

4.1.1 RF Interface Functionality

The FM150 module supports four RF connectors used for external antenna connection. As the Figure 4-1 shows, "M" is for Main antenna used to receive and transmit RF signals; "D/G" is for Diversity antenna used to receive the diversity RF signals. "M1" and "M2" are used for MIMO antennas.

Reproduction forbidden without Fibocom Wireless Inc. written authorization - All Rights Reserved.

Figure 4-1 RF connectors

4.1.2 RF Connector Characteristic

Rated Condition		Environment Condition
Frequency Range	DC to 6GHz	Temperature Range
Characteristic Impedance	50Ω	–40°C to +85°C

4.1.3 RF Connector Dimension

FM150 module adopts standard M.2 module RF connectors, the model name is 818004607 from ECT company, and the connector size is 2*2*0.6m. The connector dimension is shown as following picture:

FIBOCOM Confidential

Reproduction forbidden without Fibocom Wireless Inc. written authorization - All Rights Reserved.

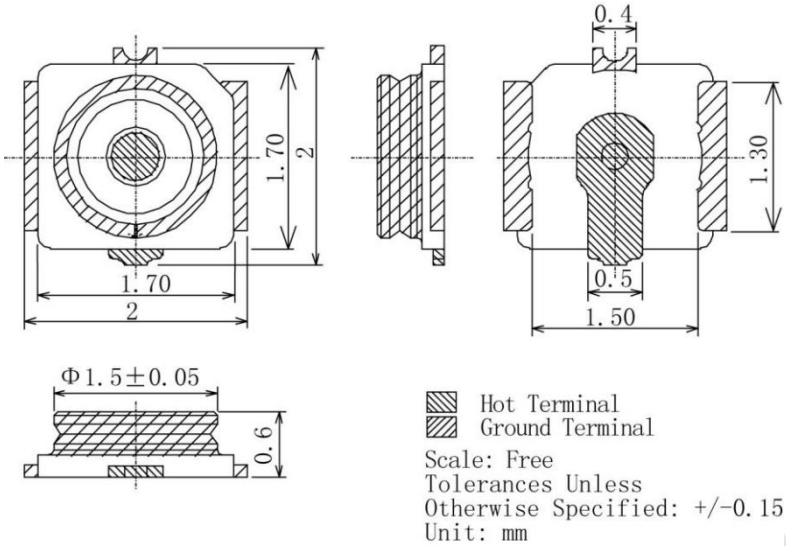

Figure 4-2 RF connector dimensions

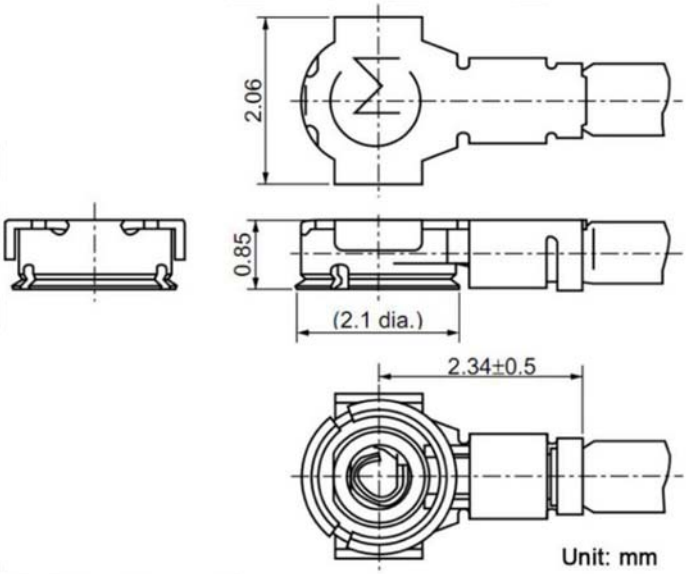

Figure 4-3 0.81mm coaxial antenna dimensions

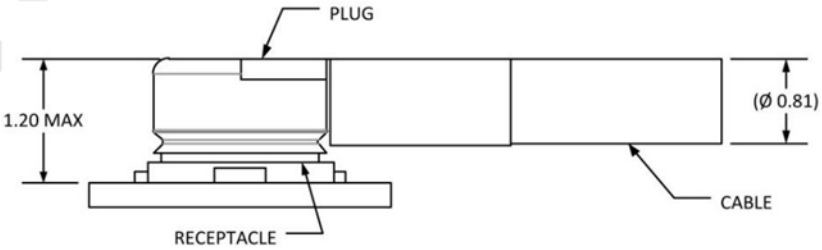

Figure 4-4 Schematic diagram of 0.81mm coaxial antenna connected to the RF connector

Note:

RF connector is a kind of precision connector. Please use special tools to assemble RF cable to avoid damage.

Reproduction forbidden without Fibocom Wireless Inc. written authorization - All Rights Reserved.

4.1.4 RF Connector Assembly

Mate RF connector parallel refer Figure 4-5, do not slant mate with strong force.

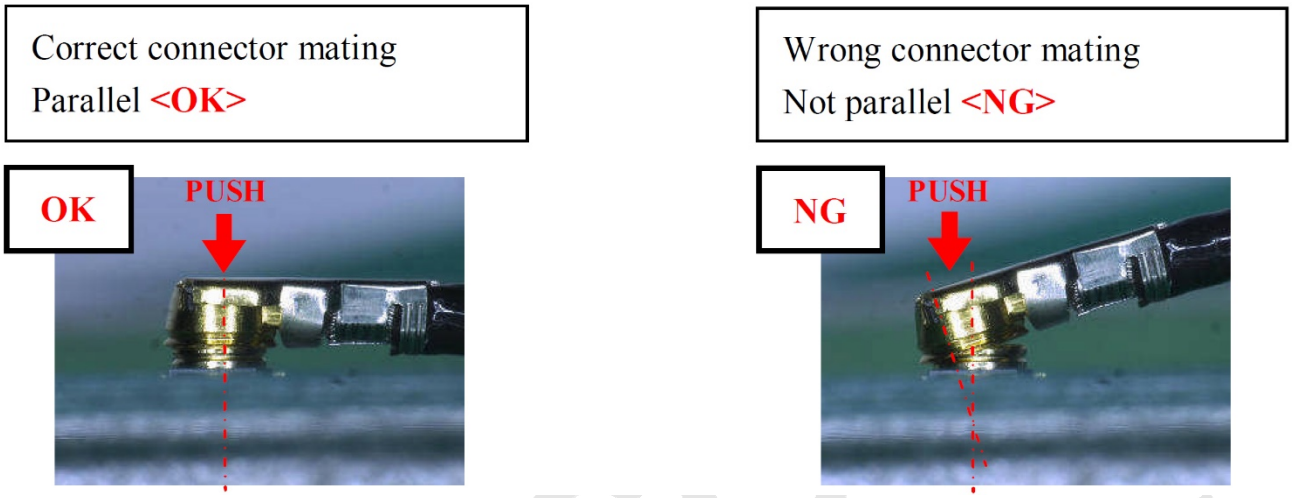

Figure 4-5 Mate RF connector

To avoid damage to the RF connector during extraction, it is recommended to use pulling JIG as Figure 4-6, and the pulling JIG must be lifted up vertically to PCB surface (see Figure 4-7 and 4-8).

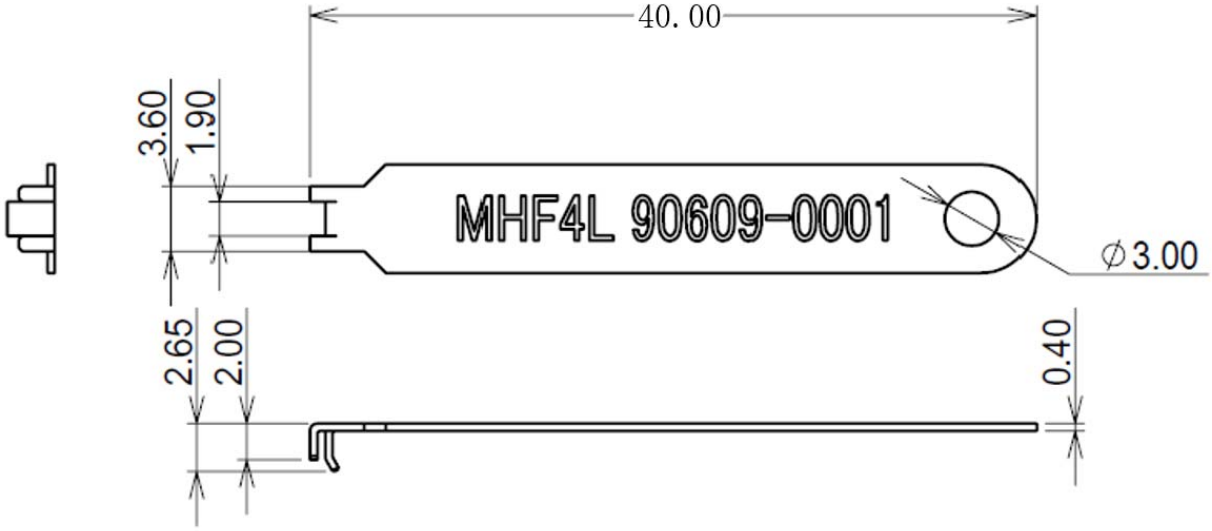

Figure 4-6 Pulling JIG

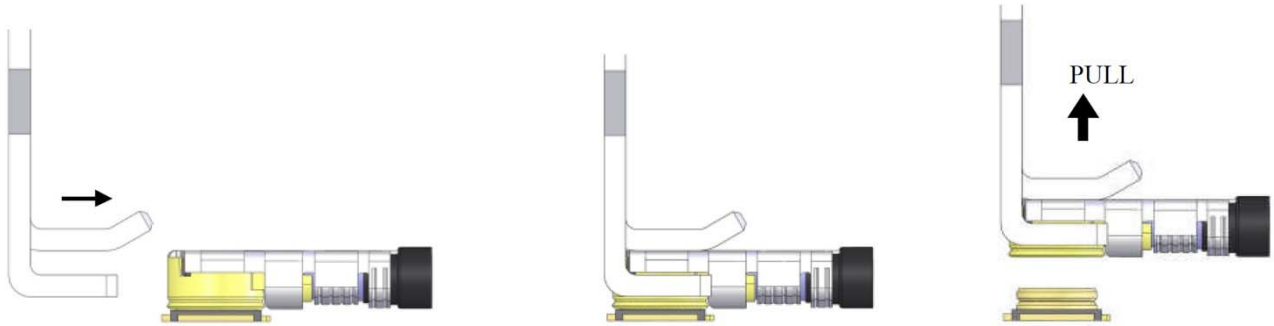

Figure 4-7 Lift up pulling JIG

Reproduction forbidden without Fibocom Wireless Inc. written authorization - All Rights Reserved.

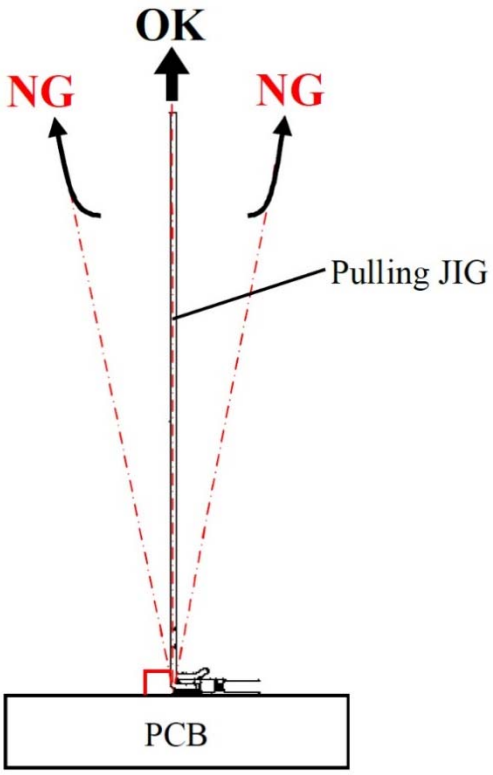

Figure 4-8 Pulling direction

4.2 Operating Band

The FM150 module operating bands of the antennas are as follows:

Operating Band	Description	Mode	Tx (MHz)	Rx (MHz)
Band 2	1900MHz	LTE FDD/WCDMA	1850-1910	1930-1990
Band 4	1700MHz	LTE FDD/WCDMA	1710-1755	2110-2155
Band 5	850MHz	LTE FDD/WCDMA	824-849	869-894
Band 7	2600Mhz	LTE FDD	2500-2570	2620-2690
Band 12	700MHz	LTE FDD	699-716	729-746
Band 13	700MHz	LTE FDD	777-787	746-756
Band 14	700MHz	LTE FDD	788-798	758-768
Band 17	700MHz	LTE FDD	704-716	734-746
Band 25	1900MHz	LTE FDD	1850-1915	1930-1995
Band 26	850MHz	LTE FDD	814-849	859-894
Band 29	700MHz	LTE FDD	N/A	716-728

Reproduction forbidden without Fibocom Wireless Inc. written authorization - All Rights Reserved.

Operating Band	Description	Mode	Tx (MHz)	Rx (MHz)
Band 30	2300MHz	LTE FDD	2305-2315	2350-2360
Band 41	2500MHZ	LTE TDD	2496-2690	2496-2690
Band 42	3500MHZ	LTE TDD	3400-3600	3400-3600
Band 43	3700MHZ	LTE TDD	3600-3800	3600-3800
Band 46	5200MHZ	LTE TDD	N/A	5150-5925
Band 48	3600MHZ	LTE TDD	3550-3700	3550-3700
Band 66	1700MHz	LTE FDD	1710-1780	2110-2200
Band 71	600MHz	LTE FDD	663-698	617-652
n2	1900MHz	NR	1850-1910	1930-1990
n5	850MHz	NR	824-849	869-894
n7	2600Mhz	NR	2500-2570	2620-2690
n12	700MHz	NR	699-716	729-746
n25	1900MHz	NR	1850-1915	1930-1995
n41	2500MHZ	NR	2496-2690	2496-2690
N48	3600 MHZ	NR	3550-3700	3550-3700
n66	1700MHz	NR	1710-1780	2110-2200
n71	600MHz	NR	663-698	617-652
n77	3700MHZ	NR	3300-4200	3300-4200
n78	3500MHZ	NR	3300-3800	3300-3800
GPS L1	-	-	-	1575.42±1.023
GLONASS L1	-	-	-	1602.5625±4
BDS	-	-	-	1561.098±2.046
Galileo	-	-	-	1559-1592
QZSS	-	-	-	1575.42±1.023

4.3 Transmitting Power

The transmitting power for each band of the FM150 module is shown in the following table:

FIBOCOM Confidential

Reproduction forbidden without Fibocom Wireless Inc. written authorization - All Rights Reserved.

Mode	Band	3GPP Requirement(dBm)	Tx Power Typical (dBm)	Unit
WCDMA	Band 1	24+1.7/-3.7	23.5±1.5	dBm
	Band 2	24+1.7/-3.7	23.5±1.5	dBm
	Band 4	24+1.7/-3.7	23.5±1.5	dBm
	Band 5	24+1.7/-3.7	23.5±1.5	dBm
	Band 8	24+1.7/-3.7	23.5±1.5	dBm
LTE	Band 2	23±2.7	23±1.5	dBm
	Band 4	23±2.7	23±1.5	dBm
	Band 5	23±2.7	23±1.5	dBm
	Band 7	23±2.7	23±1.5	dBm
	Band 12	23±2.7	23±1.5	dBm
	Band 13	23±2.7	23±1.5	dBm
	Band 14	23±2.7	23±1.5	dBm
	Band 17	23±2.7	23±1.5	dBm
	Band 25	23±2.7	23±1.5	dBm
	Band 26	23±2.7	23±1.5	dBm
	Band 30	23±2.7	22±1.0	dBm
	Band 66	23±2.7	23±1.5	dBm
	Band 41	Normal mode:23±2.7 HPUE mode:26+2/-3	Normal mode:23±1.5 HPUE mode:26±1.5	dBm
	Band 42	23+2.7/-3.2	21±1.0	dBm
	Band 43	23+2.7/-3.2	21±1.0	dBm
	Band 48	23+2.7/-3.2	21±1.0	dBm
	Band 71	23±2.7	23±1.5	dBm
5G NR	n2	23±2±TT	23±1.5	dBm
	n5	23±2±TT	23±1.5	dBm
	n7	23±2±TT	23±1.5	dBm
	n12	23±2±TT	23±1.5	dBm
	n25	23±2±TT	23±1.5	dBm
	n41	Normal mode:23±2±TT	Normal mode:23±1.5 HPUE mode:26±1.5	dBm

FIBOCOM Confidential

Reproduction forbidden without Fibocom Wireless Inc. written authorization - All Rights Reserved.

Mode	Band	3GPP Requirement(dBm)	Tx Power Typical (dBm)	Unit
		HPUE mode:26+2+TT/-3-TT		
	n48(40M)	23+2+TT/-3-TT	21±1	dBm
	n66	23+2+TT/-3-TT	23±1.5	dBm
	n71	23+2+TT/-3-TT	23±1.5	dBm
	n77	Normal mode:23±2±TT HPUE mode:26+2+TT/-3-TT	Normal mode:23±1.5 HPUE mode:26±1.5	dBm
	n78	23+2+TT/-3-TT	21±1	dBm

Note:

TT :Test Tolerance

	f ≤ 3.0GHz	3.0GHz < f ≤ 4.2GHz	4.2GHz < f ≤ 6GHz
BW ≤ 40MHz	0.7dB	1.0dB	1.0dB
40mHz < BW≤ 100MHz	1.0dB	1.0dB	1.0dB

4.4 Receiver Sensitivity

4.4.1 Dual Antenna Receiver Sensitivity

All bands support dual antenna, the receiver sensitivity for each band of FM150 module is shown in below table:

Mode	Band	3GPP Requirement (dBm)	Rx Sensitivity(dBm) Typical	Unit
WCDMA	Band 1	-106.7	-112	dBm
	Band 2	-104.7	-112.5	dBm
	Band 4	-106.7	-112	dBm
	Band 5	-104.7	-113	dBm
	Band 8	-103.7	-113	dBm
LTE (10M)	Band 2	-94.3	-101.2	dBm
	Band 4	-96.3	-101.7	dBm
	Band 5	-94.3	-101.1	dBm
	Band 7	-94.3	-101.1	dBm

FIBOCOM Confidential

Reproduction forbidden without Fibocom Wireless Inc. written authorization - All Rights Reserved.

Mode	Band	3GPP Requirement (dBm)	Rx Sensitivity(dBm) Typical	Unit
	Band 12	-93.3	-103.9	dBm
	Band 13	-93.3	-104.3	dBm
	Band 14	-93.3	-101.6	dBm
	Band 17	-93.3	-103.9	dBm
	Band 25	-92.8	-101.1	dBm
	Band 26	-93.8	-103.5	dBm
	Band 29	-93.3	-101	dBm
	Band 30	-95.3	-99.5	dBm
	Band 66	-95.8	-101.5	dBm
	Band 41	-94.3	-100.4	dBm
	Band 42	-95	-103.4	dBm
	Band 43	-95	-103	dBm
	Band 48	-95	-103.0	dBm
	Band 46	-88.5	-97.3	dBm
	Band 71	-93.3	-104.1	dBm
NR FDD(20M) TDD(100M)	n2	-91.1	-99.2	dBm
	n5	-90.1	-103.5	dBm
	n7	-91.3	-97.5	dBm
	n12*	-93.1*(BW=10M)	-104.8	dBm
	n25	-89.6	-98.4	dBm
	n41	-84	-88.5	dBm
	n48(20 MHz)	-91.9	-99.7	dBm
	n66	-92.6	-98.5	dBm
	n71	-85.3	-102	dBm
	n77	-84.6	TBD	dBm
	n78	-84.6	-92.8	dBm

Note:

The above values are measured in dual antennas condition (Main+Diversity). For single main

FIBOCOM Confidential

Reproduction forbidden without Fibocom Wireless Inc. written authorization - All Rights Reserved.

antenna (without Diversity), the sensitivity will drop about 3dB for each band of LTE.

4.4.2 Four Antenna Receiver Sensitivity

Some middle/high bands support four antenna, the receiver sensitivity for some middle/high bands of FM150 module is shown in below table:

Mode	Band	3GPP Requirement (dBm)	Rx Sensitivity(dBm) Typical	Unit
LTE (10M)	Band 2	-97.0	-104.2	dBm
	Band 4	-99	-103.9	dBm
	Band 7	-97.0	-104.0	dBm
	Band 25	-95.5	-104.0	dBm
	Band 30	-93.5	-103.4	dBm
	Band 66	-98.5	-104.3	dBm
	Band 41	-97.0	-104.1	dBm
	Band 42	-97.2	-104.2	dBm
	Band 43	-97.2	-105	dBm
	Band 48	-98	-104.2	dBm
	Band 71	TBD	TBD	dBm
NR FDD(20M) TDD(100M)	n2	-94.4	TBD	dBm
	n7	-94	TBD	dBm
	n25	-92.3	TBD	dBm
	n41	-86.7	TBD	dBm
	n48 （20M）	-94.1	-102.5	dBm
	n66	-95.3	TBD	dBm
	n77	-87.8	TBD	dBm
	n78	-86.8	TBD	dBm
	n71	-88	TBD	dBm

Note:

The above values are measured in four antennas condition (Main+Diversity+M1+M2). If only use dual antennas (Main+Diversity), the sensitivity will drop about 3dB for each band of LTE.

FIBOCOM Confidential

Reproduction forbidden without Fibocom Wireless Inc. written authorization - All Rights Reserved.

4.5 GNSS

FM150 module supports GPS/GLONASS/BDS/ Galileo/QZSS and AGNSS functions, and adopts RF Diversity and GNSS integrated antenna.

Parameter	Description	Result	Unit	Note
Sensitivity	Acquisition	-147	dBm	-
	Tracking	-159	dBm	-
C/No	-130dBm	40	dB-Hz	-
TTFF	Cold Start	40	s	-
	Warm Start	35	s	-
	Hot Start	2	s	-
CEP	Static accuracy	2	m	-

Note:

The data above is an average value tested on some samples at 25°C temperature.

4.6 Antenna Design Requirement

The FM150module provides main and diversity antenna interfaces, and the antenna design requirements is shown in the following table:

FM150 module Main antenna requirements	
Frequency range	The most proper antenna to adapt the frequencies should be used.
Bandwidth(WCDMA)	WCDMA band 1(2100): 250 MHz WCDMA band 2(1900): 140 MHz WCDMA band 4(1700): 445 MHz WCDMA band 5(850): 70 MHz WCDMA band 8(900): 80 MHz
Bandwidth(LTE)	LTE band 2(1900): 140MHz LTE band 4(1700): 445MHz LTE band 5(850): 70 MHz LTE band 7(2600): 190 MHz LTE Band 12(700): 47 MHz LTE Band 13(700): 41 MHz LTE Band 14(700): 40 MHz

FIBOCOM Confidential

Reproduction forbidden without Fibocom Wireless Inc. written authorization - All Rights Reserved.

FM150 module Main antenna requirements	
	LTE Band 17(700): 42 MHz LTE band 25(1900): 145 MHz LTE band 26(850): 80 MHz LTE band 29(700): 11 MHz LTE band 30(2300): 55 MHz LTE band 41(2500): 194 MHz LTE band 42(3500): 200 MHz LTE band 43(3700): 200 MHz LTE band 46(5200): 775 MHz LTE band 66(1700): 490 MHz LTE band 71(600): 81 MHz
NR	n2(1900): 140 MHz n5(850): 70 MHz n7(2600): 190 MHz n12(700): 47 MHz n25(1900): 145 MHz n41(2500): 194 MHz n48(3600): 150 MHz n66(1700): 490 MHz n71(600): 81 MHz n77(3700)：900MHz n78(3500): 500 MHz
Bandwidth(GNSS)	GPS: 2 MHz GLONASS: 8MHz BDS: 4MHz Galileo: 33MHz QZSS: 2MHz
Impedance	50 ohm
Input power	> 28 dBm average power WCDMA & LTE & NR5G
Recommended standing-wave ratio (SWR)	< 2:1
Antenna Gain	< 3.69dBi
Antenna isolation	> 25dB

FIBOCOM Confidential

Reproduction forbidden without Fibocom Wireless Inc. written authorization - All Rights Reserved.

FM150 module Main antenna requirements	
Antenna ECC (Envelope Correlation Coefficient)	< 0.5

Note:

ANT on B30/42/43/48 suggestion: Peak gain<1dBi, for FCC EIRP requirement, Efficient>50% for carrier TRP requirement. If integrator doesn't follow the instruction, May cause FCC EIRP or carrier TRP certification fail.

About antenna Design, please refer to the document *FIBOCOM Design Guide_RF Antenna*

5 Thermal Design

FM150 is designed to work on an extreme temperature range, to make sure the module can work properly for a long time and achieve a better performance on conditions like maximum power or high data transmission. Heat conducting material is strongly recommended to add between the bottom of module and the customer main board. For more detail design, please refer to our document *FIBOCOM_FG150&FM150 Design Guide_Thermal*.

6 Structure Specification

6.1 Product Appearance

The product appearance for FM150 module is shown in Figure6-1:

FIBOCOM Confidential

Reproduction forbidden without Fibocom Wireless Inc. written authorization - All Rights Reserved.

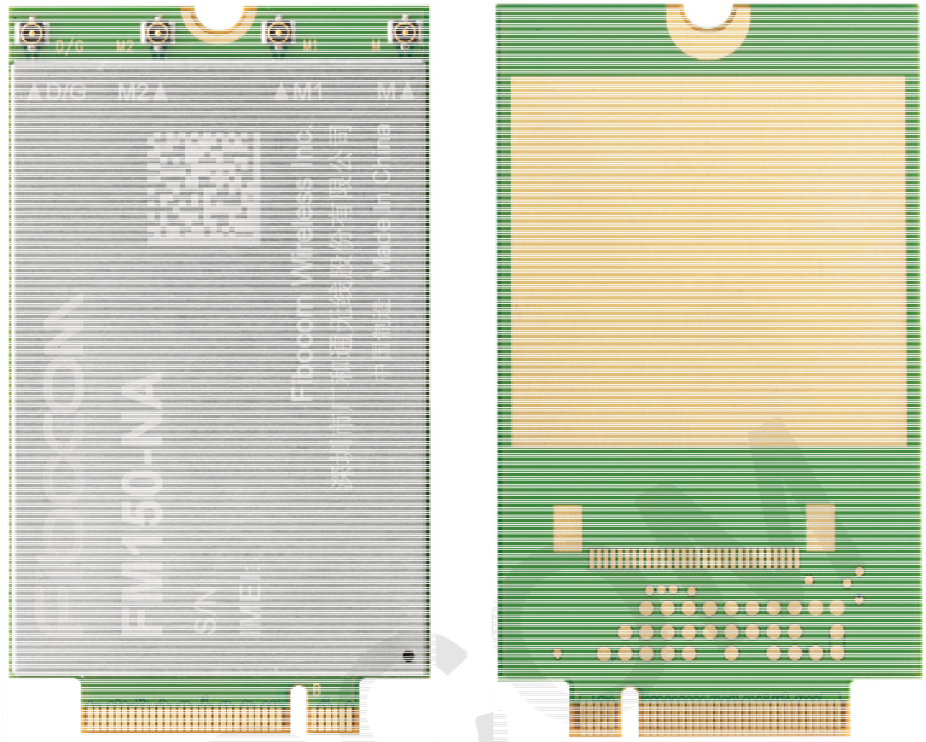

Figure 6-1 Module Appearance

6.2 Dimension of Structure

The structural dimension of the FM150 module is shown in Figure 6-2:

FIBOCOM Confidential

Reproduction forbidden without Fibocom Wireless Inc. written authorization - All Rights Reserved.

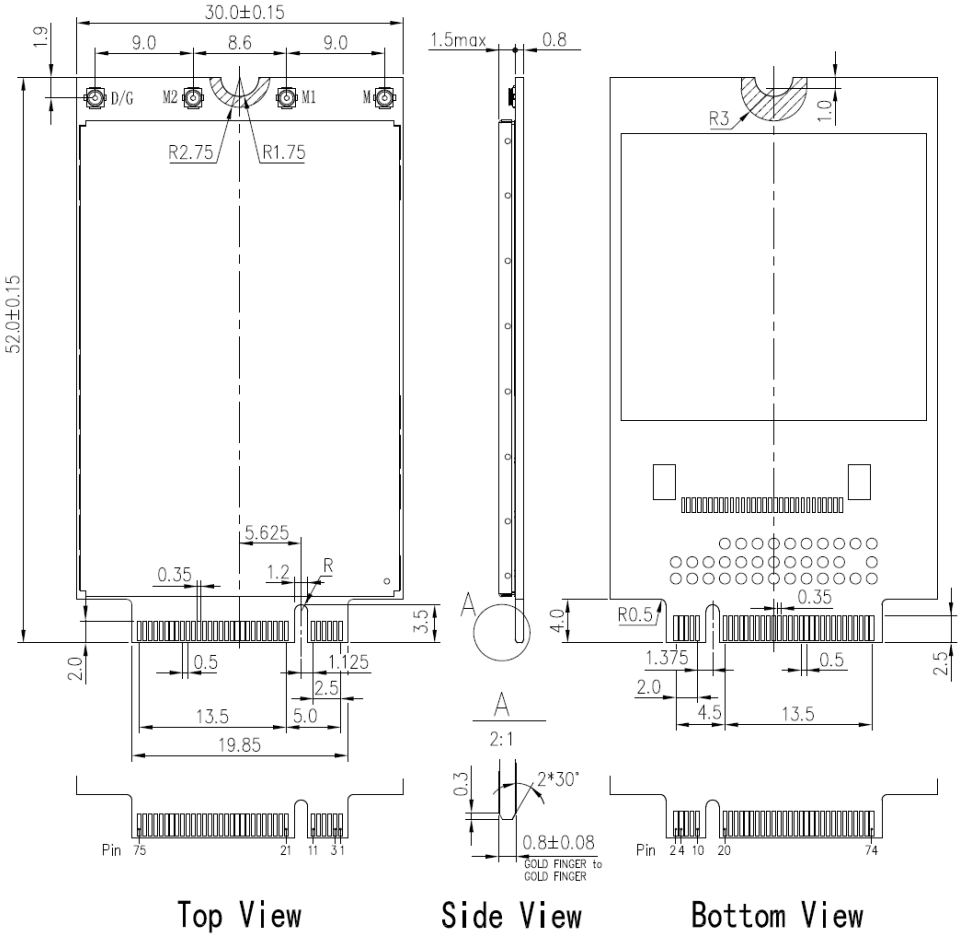

Figure 6-2 Dimension of Structure

6.3 M.2 Interface Model

The FM150 M.2 module adopts 75-pin gold finger as external interface, where 67 pins are signal pins and 8 pins are notch pins as shown in Figure 3-1. For module dimension, please refer to 6.2 Dimension of Structure. Based on the M.2 interface definition, FM150 module adopts Type 3052-S3-B interface (30x52mm, the component maximum height on t top layer is 1.5mm, PCB thickness is 0.8mm, and KEY ID is B).

6.4 M.2 Connector

The FM150 module connects to AP via M.2 connector, it is recommended to use M.2 connector from LOTES company with the model APCI0026-P001A as shown in Figure 6-3. The package of connector, please refer to the specification.

Reproduction forbidden without Fibocom Wireless Inc. written authorization - All Rights Reserved.

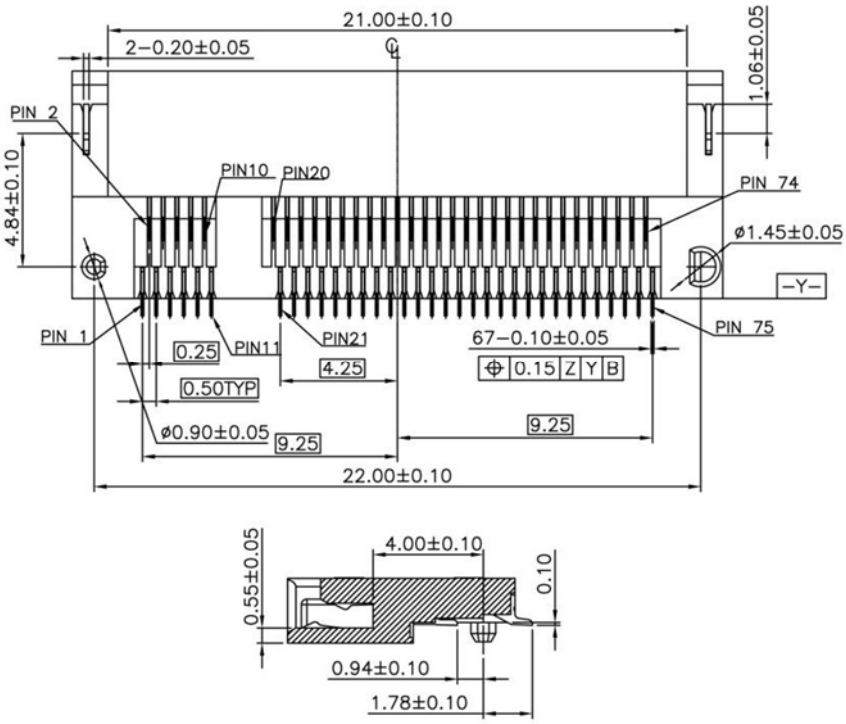

Figure 6-3 M.2 Dimension of Structure

6.5 Storage

6.5.1 Storage Life

Storage Conditions (recommended): Temperature is 23 ± 5 ℃, relative humidity is less than RH 60%.

Storage period: Under the recommended storage conditions, the storage life is 12 months.

6.6 Packing

The FM150 module uses the tray sealed packing, combined with the outer packing method using the hard cartoon box, so that the storage, transportation and the usage of modules can be protected to the greatest extent.

Note:

The module is a precision electronic product, and may suffer permanent damage if no correct electrostatic protection measures are taken.

6.6.1 Tray Package

The FM150 module uses tray package, 20 pcs are packed in each tray, with 5 trays including one empty tray on top in each box and 5 boxes in each case. Tray packaging process is shown in Figure 6-4:

FIBOCOM Confidential

Reproduction forbidden without Fibocom Wireless Inc. written authorization - All Rights Reserved.

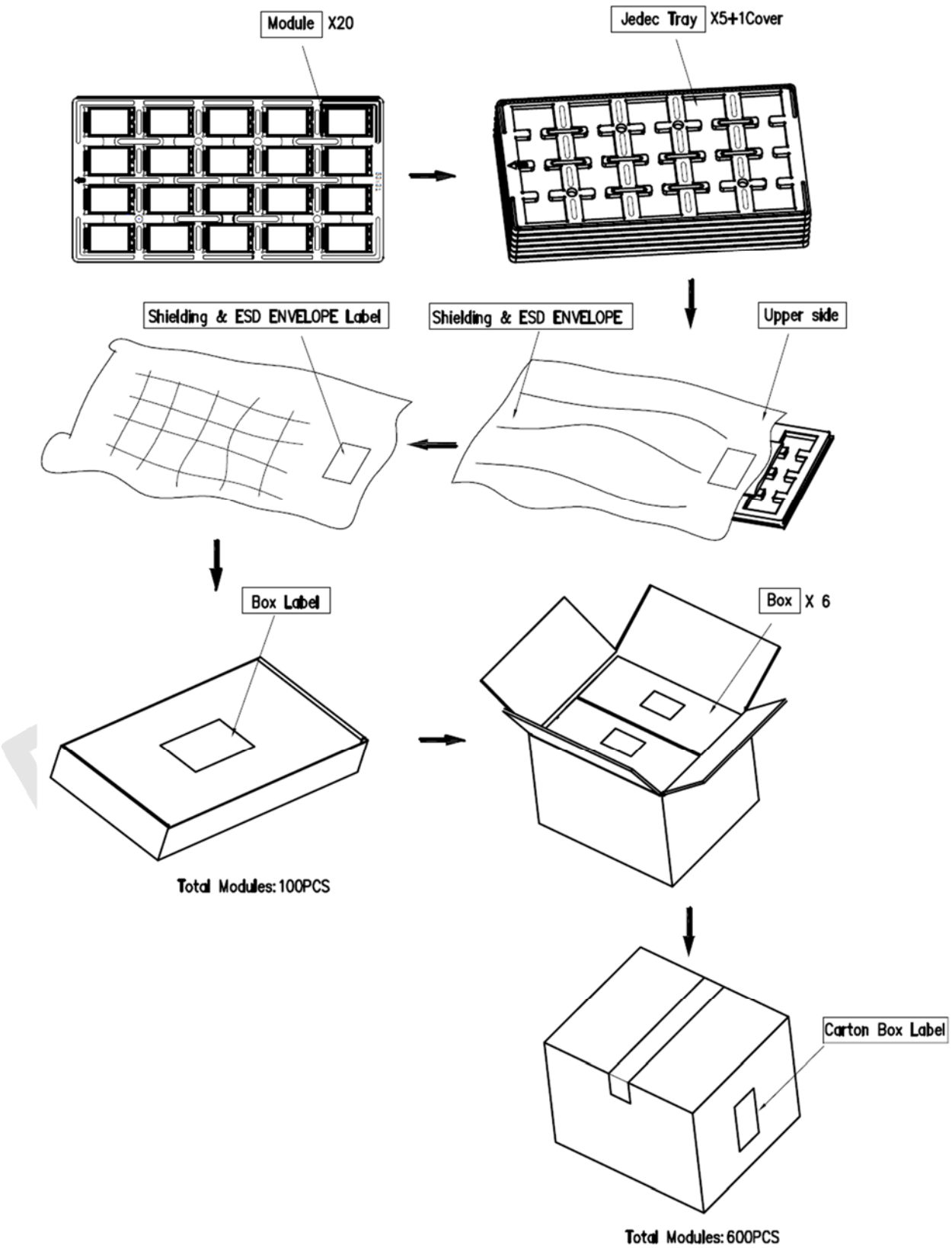

Figure 6-4 Tray Packaging Process

Reproduction forbidden without Fibocom Wireless Inc. written authorization - All Rights Reserved.

6.6.2 Tray size

The pallet size is 330*175*6.5mm, as shown in Figure 6-5:

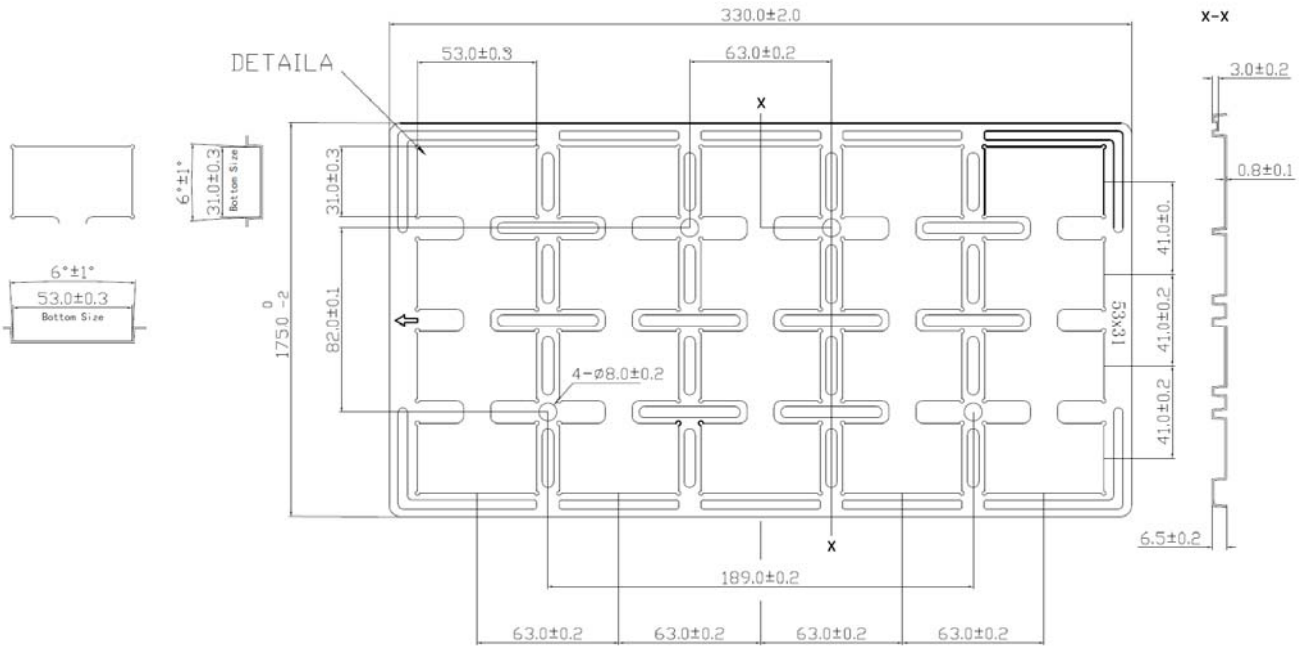

Figure 6-5 Tray Size (Unit: mm)

FIBOCOM Confidential

Reproduction forbidden without Fibocom Wireless Inc. written authorization - All Rights Reserved.