Perfect Wireless Experience
完美无线体验

FIBOCOM L860-GL-16

Hardware Guide

Version: 1.0.0

Date: 2020-09-28

Fibocom Confidential

Applicability Type

No.	Product Model	Description
1	L860-GL-16	NA

Fibocom Confidential

Reproduction forbidden without Fibocom Wireless Inc. written authorization - All Rights Reserved.

Copyright

Copyright © 2019 Fibocom Wireless Inc. All rights reserved.
Without the prior written permission of the copyright holder, any company or individual is prohibited to excerpt, copy any part of or the entire document, or distribute the document in any form.

Notice

The document is subject to update from time to time owing to the product version upgrade or other reasons. Unless otherwise specified, the document only serves as the user guide. All the statements, information and suggestions contained in the document do not constitute any explicit or implicit guarantee.

Trademark

The trademark is registered and owned by Fibocom Wireless Inc.

FCC Conformance information

Important Notice to OEM integrators

1. This module is limited to OEM installation ONLY.
2. This module is limited to installation in mobile applications, according to Part 2.1091(b).
3. The separate approval is required for all other operating configurations, including portable configurations with respect to Part 2.1093 and different antenna configurations
4. For FCC Part 15.31 (h) and (k): The host manufacturer is responsible for additional testing to verify compliance as a composite system. When testing the host device for compliance with Part 15 Subpart B, the host manufacturer is required to show compliance with Part 15 Subpart B while the transmitter module(s) are installed and operating. The modules should be transmitting and the evaluation should confirm that the module's intentional emissions are compliant (i.e. fundamental and out of band emissions). The host manufacturer must verify that there are no additional unintentional emissions other than what is permitted in Part 15 Subpart B or emissions are complaint with the transmitter(s) rule(s). The Grantee will provide guidance to the host manufacturer for Part 15 B requirements if needed.

Important Note

notice that any deviation(s) from the defined parameters of the antenna trace, as described by the instructions, require that the host product manufacturer must notify to Fibocom Wireless Inc.XXXX that they wish to change
the antenna trace design. In this case, a Class II permissive change application is required to be filed by the USI, or the host manufacturer can take responsibility through the change in FCC ID (new application) procedure followed by a Class II permissive change application.

Fibocom Confidential

End Product Labeling

When the module is installed in the host device, the FCC/IC ID label must be visible through a window on the final device or it must be visible when an access panel, door or cover is easily re-moved. If not, a second label must be placed on the outside of the final device that contains the following text: “Contains FCC ID: ZMOL860GL16”

“Contains IC: 21374-L860GL16 “

The FCC ID/IC ID can be used only when all FCC/IC compliance requirements are met.

Antenna Installation

(1) The antenna must be installed such that 20 cm is maintained between the antenna and users,

(2) The transmitter module may not be co-located with any other transmitter or antenna.

(3) Only antennas of the same type and with equal or less gains as shown below may be used with this module. Other types of antennas and/or higher gain antennas may require additional authorization for operation.

Antenna type	**PIFA**
Bands	**Peak Gain**
WCDMA B2	4
WCDMA B4	3
WCDMA B5	3
LTE B2	4
LTE B4	3
LTE B5	3
LTE B7	4
LTE B12	3
LTE B13	3
LTE B14	3

Antenna type	**PIFA**
Bands	**Peak Gain**
LTE B17	3
LTE B25	4
LTE B26	3
LTE B30	1
LTE B38	4
LTE B41	4
LTE B48	1
LTE B66	3
LTE B71	3

In the event that these conditions cannot be met (for example certain laptop configurations or co-location with another transmitter), then the FCC/IC authorization is no longer considered valid and the FCC ID/IC ID cannot be used on the final product. In these circumstances, the OEM integrator will be responsible for re-evaluating the end product (including the transmitter) and obtaining a separate FCC/IC authorization.

Manual Information to the End User

Fibocom Confidential

Reproduction forbidden without Fibocom Wireless Inc. written authorization - All Rights Reserved.

The OEM integrator has to be aware not to provide information to the end user regarding how to install or remove this RF module in the user's manual of the end product which integrates this module. The end user manual shall include all required regulatory information/warning as show in this manual.

Federal Communication Commission Interference Statement

This device complies with Part 15 of the FCC Rules. Operation is subject to the following two conditions: (1) This device may not cause harmful interference, and (2) this device must accept any interference received, including interference that may cause undesired operation.

This equipment has been tested and found to comply with the limits for a Class B digital device, pursuant to Part 15 of the FCC Rules. These limits are designed to provide reasonable protection against harmful interference in a residential installation. This equipment generates, uses and can radiate radio frequency energy and, if not installed and used in accordance with the instructions, may cause harmful interference to radio communications. However, there is no guarantee that interference will not occur in a particular installation. If this equipment does cause harmful interference to radio or television reception, which can be determined by turning the equipment off and on, the user is encouraged to try to correct the interference by one of the following measures:

- Reorient or relocate the receiving antenna.
- Increase the separation between the equipment and receiver.
- Connect the equipment into an outlet on a circuit different from that to which the receiver is connected.
- Consult the dealer or an experienced radio/TV technician for help.

Any changes or modifications not expressly approved by the party responsible for compliance could void the user's authority to operate this equipment. This transmitter must not be co-located or operating in conjunction with any other antenna or transmitter.

List of applicable FCC rules

This module has been tested and found to comply with part 22, part 24, part 27, part 90, ~~15.247 and 15.407~~ part 15B requirements for Modular Approval.

The modular transmitter is only FCC authorized for the specific rule parts (i.e., FCC transmitter rules) listed on the grant, and that the host product manufacturer is responsible for compliance to any other FCC rules that apply to the host not covered by the modular transmitter grant of certification. If the grantee markets their product as being Part 15 Subpart B compliant (when it also contains unintentional-radiator digital circuity), then the grantee shall provide a notice stating that the final host product still requires Part 15 Subpart B compliance testing with the modular transmitter installed.

This device is intended only for OEM integrators under the following conditions: (For

Fibocom Confidential

Reproduction forbidden without Fibocom Wireless Inc. written authorization - All Rights Reserved.

module device use)

1) The antenna must be installed such that 20 cm is maintained between the antenna and users, and

2) The transmitter module may not be co-located with any other transmitter or antenna.

As long as 2 conditions above are met, further transmitter test will not be required. However, the OEM integrator is still responsible for testing their end-product for any additional compliance requirements required with this module installed.

Radiation Exposure Statement

This equipment complies with FCC radiation exposure limits set forth for an uncontrolled environment. This equipment should be installed and operated with minimum distance 20 cm between the radiator & your body.

Fibocom Confidential

Reproduction forbidden without Fibocom Wireless Inc. written authorization - All Rights Reserved.

Change History

Version	Author	Date	Remark
V1.0.0	Shu Ying	2020-09-28	Draft version

Fibocom Confidential

Reproduction forbidden without Fibocom Wireless Inc. written authorization - All Rights Reserved.

Contents

1 Foreword 10

1.1 Introduction 10

1.2 Reference Standard 10

1.3 Related Documents 10

2 Overview 11

2.1 Introduction 11

2.2 Specification 11

2.3 CA Combinations 13

2.4 Application Framework 15

2.5 Hardware Block Diagram 15

2.6 Antenna Configuration 16

3 Application Interface 17

3.1 M.2 Interface 17

3.1.1 Pin Map 17

3.1.2 Pin Definition 18

3.2 Power 22

3.2.1 Power Supply 23

3.2.2 Logic Level 24

3.2.3 Power Consumption 25

3.3 Control Signal 26

3.3.1 Module Start-Up 27

3.3.1.1 Start-up Circuit 27

3.3.1.2 Start-up Timing Sequence 27

3.3.2 Module Shutdown 28

3.3.3 Module Reset 29

3.3.4 PCIe Link State 31

3.3.4.1 D0 L1.2 32

3.3.4.2 $D3_{cold}$ L2 32

3.3.5 Timing Application 34

3.4 PCIe Interface 34

3.4.1 PCIe Interface Definition 35

3.4.2 PCIe Interface Application 36

3.5 USIM Interface 37

3.5.1 USIM1 Pins 38

3.5.2 USIM Interface Circuit 38

3.5.2.1 N.C. SIM Card Slot 38

Fibocom Confidential

Reproduction forbidden without Fibocom Wireless Inc. written authorization - All Rights Reserved.

3.5.2.2 N.O. SIM Card Slot 39
3.5.3 USIM Hot-Plug 39
3.5.4 USIM Design 40
3.6 Status Indicator 40
3.6.1 LED#1 Signal 40
3.6.2 WOWWAN# 41
3.7 Interrupt Control 42
3.7.1 W_DISABLE1# 42
3.7.2 BODYSAR 42
3.7.3 ANT_CONFIG 43
3.8 ANT Tunable Interface 43
3.9 Configuration Interface 44
3.10 I2C Interface 44
3.10.1 I2C Pins 44
4 Radio Frequency 45
4.1 RF Interface 45
4.1.1 RF Interface Functionality 45
4.1.2 RF Connector Characteristic 45
4.1.3 RF Connector Dimension 45
4.1.4 RF Connector Assembly 47
4.2 Operating Band 48
4.3 Transmitting Power 49
4.4 Receiver Sensitivity 50
4.4.1 Dual Antennas Receiver Sensitivity 50
4.4.2 Four Antennas Receiver Sensitivity 51
4.5 GNSS 52
4.6 Antenna Design 52
5 ESD Characteristics 54
6 Structure Specification 55
6.1 Product Appearance 55
6.2 Dimension of Structure 55
6.3 M.2 Interface Model 56
6.4 M.2 Connector 57
6.5 Storage 58
6.6 Packing 58
6.6.1 Tray Package 58
6.6.2 Tray Size 60

Fibocom Confidential

Reproduction forbidden without Fibocom Wireless Inc. written authorization - All Rights Reserved.

1 Foreword

1.1 Introduction

The document describes the electrical characteristics, RF performance, dimensions and application environment, etc. of L860-GL-GL (hereinafter referred to as L860). With the assistance of the document and other instructions, the developers can quickly understand the hardware functions of L860 modules and develop products.

1.2 Reference Standard

The design of the product complies with the following standards:

- 3GPP TS 34.121-1 V8.11.0: User Equipment (UE) conformance specification; Radio transmission and reception (FDD); Part 1: Conformance specification
- 3GPP TS 34.122 V11.13.0: Technical Specification Group Radio Access Network; Radio transmission and reception (TDD)
- 3GPP TS 36.521-1 V13.4.0: User Equipment (UE) conformance specification; Radio transmission and reception; Part 1: Conformance testing
- 3GPP TS 21.111 V10.0.0: USIM and IC card requirements
- 3GPP TS 51.011 V4.15.0: Specification of the Subscriber Identity Module -Mobile Equipment (SIM-ME) interface
- 3GPP TS 31.102 V10.11.0: Characteristics of the Universal Subscriber Identity Module (USIM) application
- 3GPP TS 31.11 V10.16.0: Universal Subscriber Identity Module (USIM) Application Toolkit (USAT)
- 3GPP TS 36.124 V10.3.0: Electro Magnetic Compatibility (EMC) requirements for mobile terminals and ancillary equipment
- 3GPP TS 27.007 V10.0.8: AT command set for User Equipment (UE)
- 3GPP TS 27.005 V10.0.1: Use of Data Terminal Equipment - Data Circuit terminating Equipment (DTE-DCE) interface for Short Message Service (SMS) and Cell Broadcast Service (CBS)
- PCI Express M.2 Specification Rev1.2

1.3 Related Documents

- FIBOCOM Design Guide_RF Antenna
- FIBOCOM L860 Series AT Commands_V3.4.1

Fibocom Confidential

Reproduction forbidden without Fibocom Wireless Inc. written authorization - All Rights Reserved.

2 Overview

2.1 Introduction

L860 is a highly integrated 4G WWAN module which uses M.2 form factor interface. It supports LTE FDD/LTE TDD/WCDMA systems and can be applied to most cellular networks of mobile carrier in the world.

2.2 Specification

Specification		
Operating Band	LTE FDD: Band 2, 4, 5, 7, 12, 13, 14, 17, 25, 26, 29, 30, 66, 71	
	LTE TDD: Band 38, 41(HPUE), 48	
	LAA Band 46 Receiver only	
	4x4MIMO support: Band 2, 4, 7, 25, 30, 38, 41, 48, 66	
	WCDMA/HSPA+: Band 2, 4, 5	
GNSS	Support GPS, BDS, GLONASS, Galileo	
LTE	3GPP Release 13	
UMTS	3GPP Release 12	
Data Transmission	LTE FDD	LTE FDD: 1Gbps DL (Cat 16)/50Mbps UL (Cat 13)
	LTE TDD	LTE TDD: 756Mbps DL (Cat 16)/90Mbps UL (Cat 13)
	UMTS/HSPA+	UMTS:384 kbps DL/384 kbps UL
		DC-HSPA+:42 Mbps DL (Cat 24)/5.76 Mbps UL (Cat6)
Carrier Aggregation	5CA Downlink /2*ULCA (Intra band) UL 64QAM Support	
Power Supply	DC 3.135V-4.4V, Typical 3.3V	
Temperature	Normal operating temperature: -10°C-+55°C Extended operating temperature: -20°C-+65°C	
	Storage temperature: -40°C-+85°C	
Physical Characteristics	Interface: M.2 Key-B	
	Dimension：30×42×2.3mm	
	Weight: About 6.2 g	
Interface		
Antenna Connector	WWAN Antenna×4	

Fibocom Confidential

Reproduction forbidden without Fibocom Wireless Inc. written authorization - All Rights Reserved.

Specification	
	Support 4×4 MIMO
Function Interface	Dual SIM, 1.8V/3V
	PCIe 2.0×1
	USB 2.0 (For debug)
	USB 3.0 (For debug)
	W_Disable#
	BodySAR
	LED
	Tunable antenna
	UART
Software	
Protocol Stack	IPV4/IPV6
AT Commands	3GPP TS 27.007 and 27.005
Firmware Update	PCIe
Other Feature	Multiple carrier
	Windows MBIM support
	Windows update
OS	Windows10/Linux/Android

Note:

- B42 disabled as of FCC certification, support pending regulatory approval.
- When temperature goes beyond normal operating temperature range of -10°C-+55°C, RF performance of module may be slightly off 3GPP specifications.

Fibocom Confidential

Reproduction forbidden without Fibocom Wireless Inc. written authorization - All Rights Reserved.

2.3 CA Combinations

UL CA Combination		
2CA	Intra-band	5B,7C,38C,41C,66B,66C

DL CA Combination		
2CA	Inter-band	2+4, 5, 12, 13, 14, 29, 30, 46,48, 66,71
		4+5, 12, 13, 29, 30, 46,48,71
		5+7, 30, 46, 66,48
		12+30, 66
		13+46, 66,48
		14+30, 66
		25+26, 41, 46
		26+41
		29+30, 66
		30+66
		41+46
		46+66
		48+66
	Intra-band (non-contiguous)	2, 4, 7, 25, 41,48, 66
	Intra-band (contiguous)	2, 5, 7, 38, 41, 48, 66
3CA	Inter-band	2+4+5, 2+4+12, 2+4+13,2+4+71, 2+5+30 ,2+5+48, 2+12+30, 2+29+30, 2+5+66, 2+13+66, 2+14+30, 2+14+66, 2+30+66, 2+5+46, 2+13+46, 2+46+66, 2+12+66,2+13+48,2+66+71
		4+5+30, 4+12+30, 4+29+30
		5+30+66, 5+46+66,5+48+66
		12+30+66, 13+46+66, 13+48+66,14+30+66, 29+30+66
	2 intra-band (non-contiguous) plus inter-band	2+2+5, 2+2+12, 2+2+13, 2+2+30, 2+2+66, 2+4+4, 2+46+46,2+66+66,2+2+4,2+2+14,2+2+71,2+2+46
		4+4+5, 4+4+12, 4+4+13, 4+46+46, 5+66+66,4+4+7,5+5+66,5+48+48
		12+66+66, 13+66+66, 46+46+66, 29+66+66, 30+66+66,13+48+48,14+66+66,46+66+66,48+48+66,66 +66+71
	2 intra-band (contiguous) plus inter-band	2+5+5, 2+46+46, 2+66+66
		4+46+46, 5+5+30, 5+5+66, 5+46+46, 5+66+66, 4+5+5,5+48+48,5+66+66,5+5+46,7+7+46,7+46+46,
		13+46+46, 13+66+66, 25+41+41, 26+41+41, 46+46+66,13+48+48,13+66+66, 48+66+66, 48+48+66,66+66+71
	Intra-band (non-contiguous)	41, 66
	Intra-band (contiguous)	41,48
4CA	Inter-band	2+5+30+66, 2+12+30+66, 2+14+30+66
	2 intra-band (non-contiguous) plus 2 inter-band	2+2+5+66, 2+2+12+30, 2+2+12+66, 2+2+13+66, 2+5+66+66, 2+12+66+66, 2+13+66+66, 5+30+66+66, 29+30+66+66,1+1+3+7, 2+2+4+71,2+2+14+66,2+2+66+71,2+14+66+66,2+66+6 6+71,
	2 intra-band (contiguous) plus 2 inter-band	2+5+5+30, 2+5+5+66, 2+5+46+46, 2+13+46+46, 2+46+46+46, 2+46+46+66, 2+5+66+66, 2+13+66+66, 2+66+66+71,

Fibocom Confidential

Reproduction forbidden without Fibocom Wireless Inc. written authorization - All Rights Reserved.

DL CA Combination		
		4+46+46+46, 5+5+30+66, 5+46+46+66, 13+46+46+66, 66+46+46+46, 13+48+66+66,13+48+48+66,
	2 intra-band (contiguous) plus 2 intra-band (contiguous)	5+5+66+66,5+5+46+46,7+7+46+46,48+48+66+66,
	2 intra-band (contiguous) plus 2 intra-band (non-contiguous)	5+5+66+66,2+2+46+46,46+46+66+66, 2+2+5+5,2+2+66+66,4+4+5+5,48+48+66+66,
	3 intra-band (contiguous) plus inter-band	2+46+46+46, 3+40+40+40, 4+46+46+46, 5+46+46+46, 13+46+46+46, 25+41+41+41, 66+46+46+46,7+46+46+46,
	Intra-band (non-contiguous)	41
	Intra-band (contiguous)	48,41
5CA	2 intra-band (contiguous) plus 2 intra-band (contiguous) plus inter-band	2+46+46+46+46, 46+46+46+46+66,2+5+5+66+66,13+48+48+66+66,48+48+48+66+66
	2 intra-band (contiguous) plus 3 inter-band	2+5+5+30+66
	2 intra-band (contiguous) plus 2 intra-band (non-contiguous) plus inter-band	2+5+5+66+66 , 2+2+5+66+66, 2+2+13+66+66,13+48+48+66+66
	3 intra-band (contiguous) plus 2 intra-band (non-contiguous)	2+2+46+46+46,
	3 intra-band (contiguous) plus 2 inter-band	2+5+46+46+46, 2+13+46+46+46, 2+46+46+46+46, 2+46+46+46+66, 4+46+46+46+46, 5+46+46+46+66, 13+46+46+46+66, 46+46+46+46+66
	3 intra-band (contiguous) plus 2 intra-band (contiguous)	46+46+46+66+66,5+5+46+46+46,7+7+46+46+46
	4 intra-band (contiguous) plus inter-band	2+46+46+46+46, 5+46+46+46+46, 13+46+46+46+46, 46+46+46+46+66
	Intra-band (contiguous)	41,48
	Intra-band (non-contiguous)	41

Fibocom Confidential

Reproduction forbidden without Fibocom Wireless Inc. written authorization - All Rights Reserved.

2.4 Application Framework

The peripheral applications for L860 module are shown in Figure 2-1:

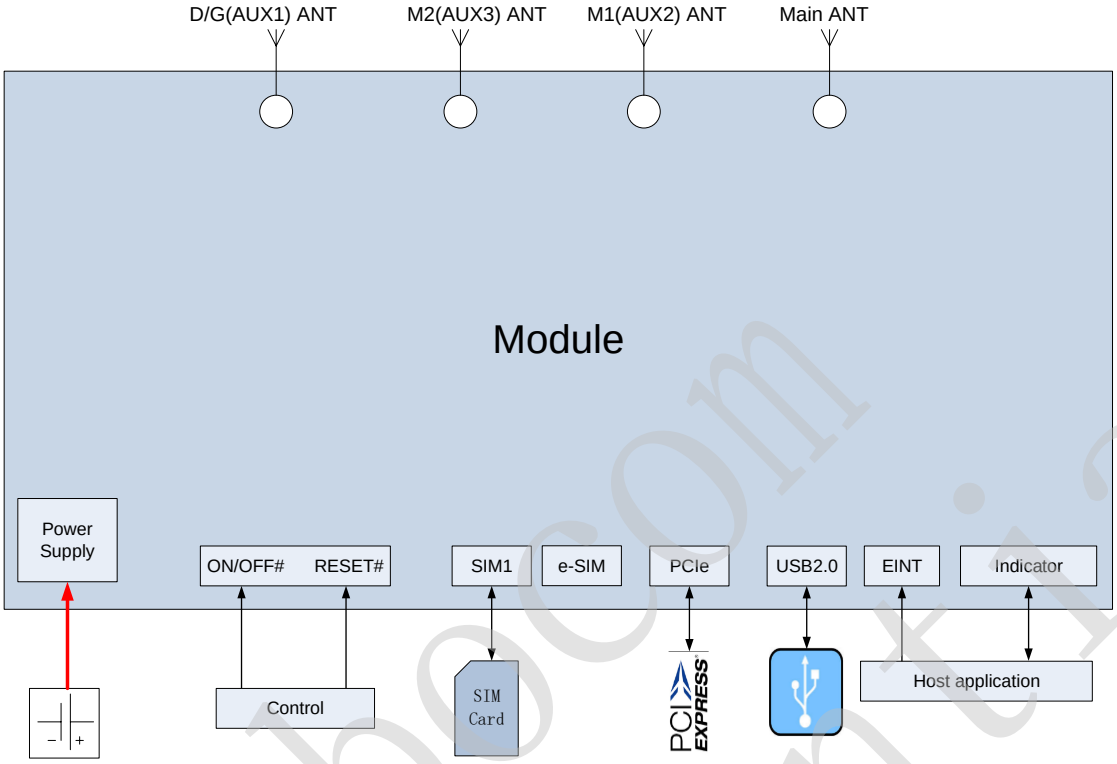

Figure 2-1 Application framework

2.5 Hardware Block Diagram

The hardware block diagram in Figure 2-2 shows the main hardware functions of L860 module, including baseband and RF functions.

Baseband contains the followings:

- UMTS/LTE controller
- PMU
- NAND/internal LPDDR4 RAM
- Application interface

RF contains the followings:

- RF Transceiver
- RF Power/PA
- RF Front end
- RF Filter
- Antenna Connector

Fibocom Confidential

Reproduction forbidden without Fibocom Wireless Inc. written authorization - All Rights Reserved.

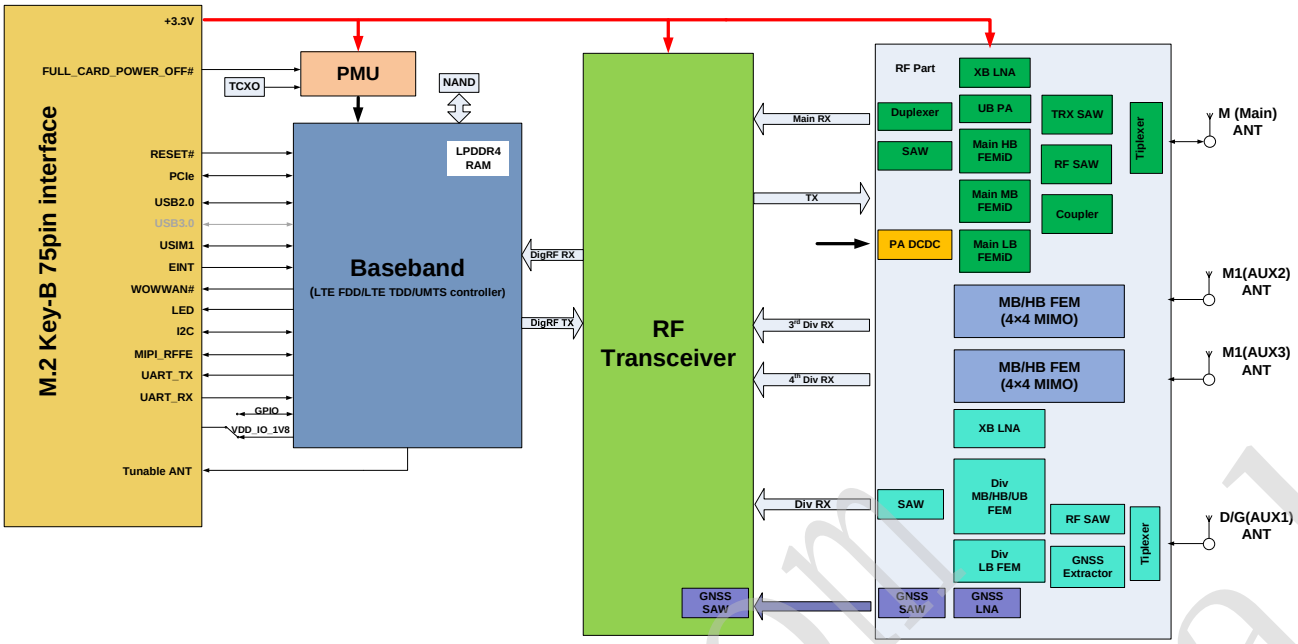

Figure 2-2 Hardware block diagram

2.6 Antenna Configuration

L860 module support four antennas and the configuration is as below table:

Antenna Connector	Function Description	Band Configuration
M	Main ANT	All supported bands transmit & receive
M1	MIMO1 ANT	4×4 MIMO supported bands receive
M2	MIMO2 ANT	4×4 MIMO supported bands receive
D/G	Diversity & GNSS ANT	All supported bands and GNSS receive

Fibocom Confidential

Reproduction forbidden without Fibocom Wireless Inc. written authorization - All Rights Reserved.

3 Application Interface

3.1 M.2 Interface

The L860 module applies standard M.2 Key-B interface, with a total of 75 pins.

3.1.1 Pin Map

74	+3.3V	CONFIG_2	75
72	+3.3V	VIO_CFG	73
70	+3.3V	GND	71
68	ANT_CONFIG(1.8V)	CONFIG_1	69
66	SIM1_DETECT(1.8V)	RESET#(1.8V)	67
64	COEX_TXD(1.8V)	ANTCTL3(1.8V)	65
62	COEX_RXD(1.8V)	ANTCTL2(1.8V)	63
60	COEX3(1.8V)	ANTCTL1(1.8V)	61
58	RFE_RFFE_SDATA	ANTCTL0(1.8V)	59
56	RFE_RFFE_SCLK	GND	57
54	PEWAKE# (3.3V)	REFCLKP	55
52	CLKREQ# (3.3V)	REFCLKN	53
50	PERST# (3.3V)	GND	51
48	NC	PERp0	49
46	NC	PERn0	47
44	I2C_IRQ#(1.8V)	GND	45
42	I2C_SDA(1.8V, I2C Slave/Master)	PETp0	43
40	I2C_SCL(1.8V, I2C Slave/Master)	PETn0	41
38	NC	GND	39
36	UIM1_PWR	USB3.0-Rx+	37
34	UIM1_DATA	USB3.0-Rx-	35
32	UIM1_CLK	GND	33
30	UIM1_RESET	USB3.0-Tx+	31
28	UART_RX(1.8V, mux for GPIO)	USB3.0-Tx-	29
26	W_DISABLE2#(3.3/1.8V)	GND	27
24	ANT_TUNER_1V8(1.8V, mux for GPIO)	DPR(3.3/1.8V)	25
22	UART_TX(1.8V, mux for ANT_TUNER_CFG/GPIO)	WOWWAN#(1.8V)	23
20	GPIO(1.8V)	CONFIG_0	21
	Notch	Notch	
	Notch	Notch	
	Notch	Notch	
	Notch	Notch	
10	LED1#(3.3V OD)	GND	11
8	W_DISABLE1#(3.3/1.8V)	USB D-	9
6	FULL_CARD_POWER_OFF#(3.3/1.8V)	USB D+	7
4	+3.3V	GND	5
2	+3.3V	GND	3
		CONFIG_3	1

Figure 3-1 Pin map

Note:

Pin “Notch” represents the gap of the gold fingers.

Fibocom Confidential

Reproduction forbidden without Fibocom Wireless Inc. written authorization - All Rights Reserved.

3.1.2 Pin Definition

The pin definition is as follows:

Pin	Pin Name	I/O	Reset Value	Pin Description	Type
1	CONFIG_3	O	NC	NC, L860 M.2 module is configured as the WWAN – PCIe, USB3.0 interface type	
2	+3.3V	PI	-	Power input	Power Supply
3	GND	-	-	GND	Power Supply
4	+3.3V	PI	-	Power input	Power Supply
5	GND	-	-	GND	Power Supply
6	FULL_CARD_ POWER_OFF#	I	PU	Power enable, module power on input, internal pull up	3.3/1.8V
7	USB D+	I/O		USB data plus, only for debug	0.3---3V
8	W_DISABLE1#	I	PD	WWAN disable, active low	3.3/1.8V
9	USB D-	I/O		USB data minus, only for debug	0.3---3V
10	LED1#	OD	T	System status LED, output open drain, CMOS 3.3V	3.3V
11	GND	-	-	GND	Power Supply
12	Notch			Notch	
13	Notch			Notch	
14	Notch			Notch	
15	Notch			Notch	
16	Notch			Notch	
17	Notch			Notch	
18	Notch			Notch	
19	Notch			Notch	
20	GPIO	O	PD	GPIO(High-z) UART_RTS (Reserved)	1.8V
21	CONFIG_0		NC	NC, L860 M.2 module is configured as the WWAN – PCIe, USB3.0 interface type	
22	UART_TX	O	PD	UART_TX, MUX for ANT_TUNER_CONFIG/GPIO(High-z)	1.8V

Fibocom Confidential

Reproduction forbidden without Fibocom Wireless Inc. written authorization - All Rights Reserved.

Pin	Pin Name	I/O	Reset Value	Pin Description	Type
23	WOWWAN#	O	PD	Wake up host, Reserved	1.8V
24	ANT_TUNER_1V8	PO IO	PD	1.8V output for ANT Tuner GPIO(High-z) UART_CTS (Reserved)	Power Supply /1.8V
25	DPR	I	PD	BodySAR detect, active low	3.3/1.8V
26	W_DISABLE2#	I	PD	GNSS disable, active low, Reserved	3.3/1.8V
27	GND	-	-	GND	Power Supply
28	UART_RX	I	PD	UART_RX, MUX for GPIO(High-z)	1.8V
29	USB3.0_TX-	O		USB3.0 transmit data minus, only for debug	
30	UIM_RESET	O	L	SIM reset signal	1.8V/3V
31	USB3.0_TX+	O		USB3.0 transmit data plus, only for debug	
32	UIM_CLK	O	L	SIM clock signal	1.8V/3V
33	GND	-	-	GND	Power Supply
34	UIM_DATA	I/O	L	SIM data input/output	1.8V/3V
35	USB3.0_RX-	I		USB3.0 receive data minus, only for debug	
36	UIM_PWR	O		SIM power supply, 1.8V/3V	1.8V/3V
37	USB3.0_RX+	I		USB3.0 receive data plus, only for debug	
38	NC			NC	
39	GND	-	-	GND	Power Supply
40	I2C_SCL	I	PU	Master I2C1 CLK	1.8V
41	PETn0	O		PCIe TX differential signal Negative	
42	I2C_SDA	I/O	PU	Master I2C1 DATA	1.8V
43	PETp0	O		PCIe TX differential signal Positive	
44	I2C_IRQ#	O	PD	I2C1 INT, Wake up I2C HOST	1.8V
45	GND	-	-	GND	Power Supply

Fibocom Confidential

Reproduction forbidden without Fibocom Wireless Inc. written authorization - All Rights Reserved.

Pin	Pin Name	I/O	Reset Value	Pin Description	Type
46	NC			NC	
47	PERn0	I		PCIe RX differential signal Negative	
48	NC			NC	
49	PERP0	I		PCIe RX differential signal Positive	
50	PERST#	I	PU	Asserted to reset module PCIe interface default. If module went into core dump, it will reset whole module, not only PCIe interface. Active low, internal pull up (10KΩ)	3.3V
51	GND	-	-	GND	Power Supply
52	CLKREQ#	O	PU	Asserted by device to request a PCIe reference clock be available (active clock state) in order to transmit data. It also used by L1 PM Sub states mechanism, asserted by either host or device to initiate an L1 exit. Active low, internal pull up (10KΩ)	3.3V
53	REFCLKN	I		PCIe reference clock signal Negative	
54	PEWAKE#	O	L	Asserted to wake up system and reactivate PCIe link from L2 to L0, it depends on system whether supports wake up functionality. Active low, open drain output and should add external pull up (100KΩ) on platform	3.3V
55	REFCLKP	I		PCIe reference clock signal, Positive	
56	RFFE_SCLK	O	PD	MIPI interface tunable ANT, RFFE clock	1.8V
57	GND			GND	Power Supply
58	RFFE_SDATA	I/O	PD	MIPI interface tunable ANT, RFFE data	1.8V

Fibocom Confidential

Reproduction forbidden without Fibocom Wireless Inc. written authorization - All Rights Reserved.

Pin	Pin Name	I/O	Reset Value	Pin Description	Type
59	ANTCTL0	O	L	Tunable ANT CTRL0	1.8V
60	COEX3	I/O	PD	Wireless coexistence between WWAN and WIFI/BT modules, based on BT-SIG coexistence protocol. COEX_EXT_FTA, Reserved	1.8V
61	ANTCTL1	O	PD	Tunable ANT CTRL1	1.8V
62	COEX_RXD	I	T	Wireless coexistence between WWAN and WIFI/BT modules, based on BT-SIG coexistence protocol. UART receive signal (WWAN module side), Reserved	1.8V
63	ANTCTL2	O	PD	Tunable ANT CTRL2	1.8V
64	COEX_TXD	O	T	Wireless coexistence between WWAN and WIFI/BT modules, based on BT-SIG coexistence protocol. UART transmit signal (WWAN module side), Reserved	1.8V
65	ANTCTL3	O	PD	Tunable ANT CTRL3	1.8V
66	SIM1_DETECT	I	PD	SIM1 detect, internal pull up (390KΩ), active high	1.8V
67	RESET#	I	PU	WWAN reset input, internal pull up (10KΩ), active low	1.8V
68	ANT_CONFIG	I	PD	Host antenna configuration detect, internal pull up (100KΩ), Reserved	1.8V
69	CONFIG_1	O	GND	GND, L860 M.2 module is configured as the WWAN – PCIe, USB3.0 interface type	-
70	+3.3V	PI	-	Power input	Power Supply
71	GND	-	-	GND	Power Supply
72	+3.3V	PI	-	Power input	Power Supply
73	VIO_CFG	-	-	Voltage indication of PCIe side band. GND, Support PCIe Interface 3.3V. NC, support 1.8V and compatible with 3.3V.	-
74	+3.3V	PI	-	Power input	Power Supply

Fibocom Confidential

Reproduction forbidden without Fibocom Wireless Inc. written authorization - All Rights Reserved.

Pin	Pin Name	I/O	Reset Value	Pin Description	Type
75	CONFIG_2	O	NC	NC, L860 M.2 module is configured as the WWAN – PCIe, USB3.0 interface type	-

Reset Value: The initial status after module reset, not the status when working.

- H: High Voltage Level
- L: Low Voltage Level
- PD: Pull-Down
- PU: Pull-Up
- T: Tristate
- OD: Open Drain
- PI: Power Input
- PO: Power Output

Note:
The unused pins can be left floating.

3.2 Power

The power interface of L860 module is shown in the following table:

Pin	Pin Name	I/O	Pin Description	DC Parameter (V)		
				Minimum Value	Typical Value	Maximum Value
2, 4, 70, 72, 74	+3.3V	PI	Power supply input	3.135	3.3	4.4
36	UIM_PWR	PO	USIM power supply	-	1.8V/3V	-
48	UIM2_PWR	PO	USIM power supply	-	1.8V/3V	-

L860 module uses PCIe interface. According to the PCIe specification, the PCIe Vmain should be used as the +3.3V power source, not the Vaux. The Vaux is the PCIe backup power source and it is not sufficient as the power supply. In addition, the DC/DC power supply other than PCIe ports should not be used as the external power cannot control the module status through the PCIe protocol.

Fibocom Confidential

Reproduction forbidden without Fibocom Wireless Inc. written authorization - All Rights Reserved.

3.2.1 Power Supply

The L860 module should be powered through the +3.3V pins, and the power supply design is shown in Figure 3-2:

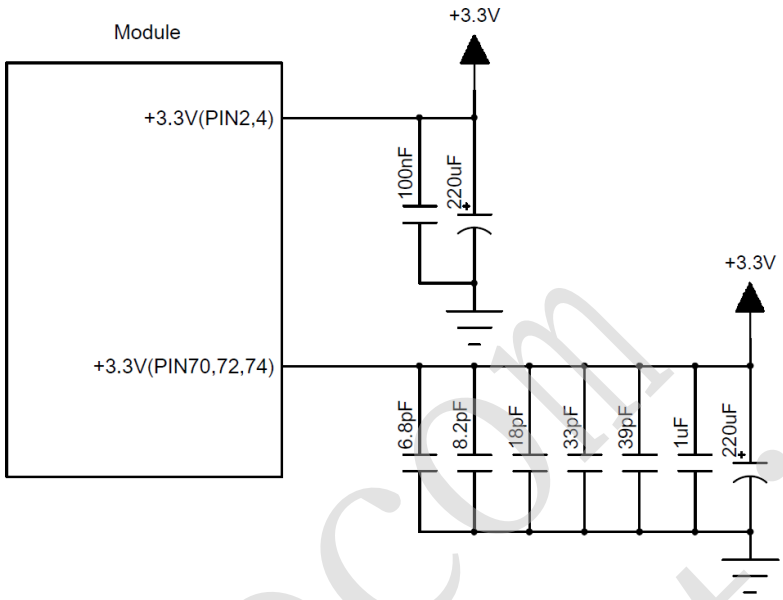

Figure 3-2 Power supply design

The filter capacitor design for power supply is shown in the following table:

Recommended Capacitance	Application	Description
220uFx2	Voltage-stabilizing capacitors	Reduce power fluctuations of the module in operation, requiring capacitors with low ESR. ● LDO or DC/DC power supply requires the capacitor of no less than 440uF ● The capacitor for battery power supply can be reduced to 100-200uF
1uF, 100nF	Digital signal noise	Filter out the interference generated from the clock and digital signals
39pF, 33pF	700/800, 850/900 MHz frequency band	Filter out low frequency band RF interference
18pF, 10pF, 8.2pF, 6.8pF, 3.3pF	1500/1700/1800/1900, 2100/2300, 2500/2600MHz, 3500/3700MHz, 5GHz frequency band	Filter out medium/high frequency band RF interference

Fibocom Confidential

Reproduction forbidden without Fibocom Wireless Inc. written authorization - All Rights Reserved.

The stable power supply can ensure the normal operation of L860 module. The ripple of the power supply should be less than 300mV in design. Because module support 5CA download. When module operates with the maximum data transfer throughput, the peak current can reach to upper 2500mA. It requests the power source voltage should not be lower than 3.135V, otherwise module may shut down or restart. The power supply requirement is shown in Figure 3-3:

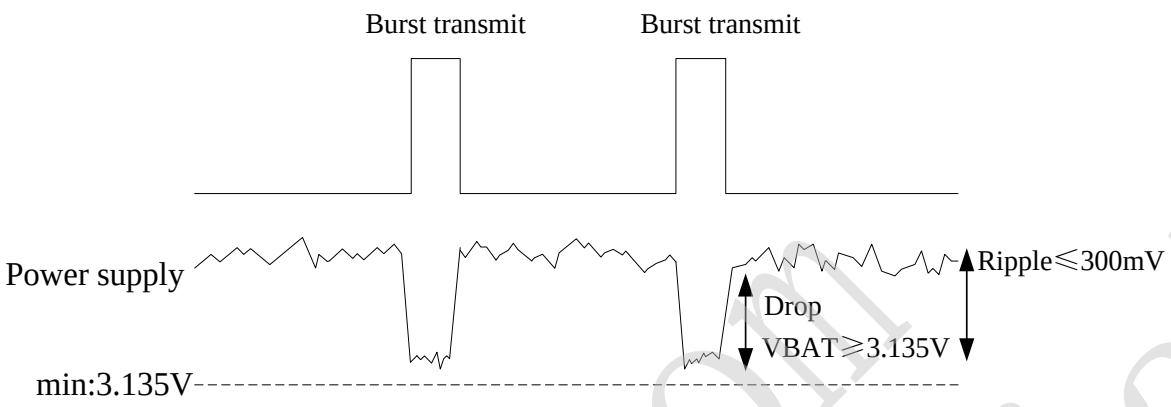

Figure 3-3 Power supply requirement

3.2.2 Logic Level

The L860 module 1.8V logic level definition is shown in the following table:

Parameter	Minimum	Typical	Maximum	Unit
1.8V logic level	1.71	1.8	1.89	V
V_{IH}	1.3	1.8	1.89	V
V_{IL}	-0.3	0	0.3	V

The L860 module 3.3V logic level definition is shown in the following table:

Parameter	Minimum	Typical	Maximum	Unit
3.3V logic level	3.135	3.3	3.465	V
V_{IH}	2.3	3.3	3.465	V
V_{IL}	-0.3	0	0.3	V

Fibocom Confidential

Reproduction forbidden without Fibocom Wireless Inc. written authorization - All Rights Reserved.

3.2.3 Power Consumption

In the condition of 3.3V power supply, the L860 power consumption is shown in the following table:

Parameter	Mode	Condition	Typical Current (mA)
I_{off}	Power off	Power supply, module power off	0.02
I_{Sleep}	WCDMA	DRX=6	5.5
		DRX=8	3.5
		DRX=9	3.3
	LTE FDD	Paging cycle #128 frames (1.28s DRx cycle)	5.3
	LTE TDD	Paging cycle #128 frames (1.28s DRx cycle)	5.3
	Radio Off	AT+CFUN=4, flight mode	2.8
$I_{WCDMA-RMS}$	WCDMA	WCDMA Data call Band 2 @+23.5dBm	730
		WCDMA Data call Band 4 @+23.5dBm	800
		WCDMA Data call Band 5 @+23.5dBm	580
$I_{LTE-RMS}$	LTE FDD	LTE FDD Data call Band 2 @+23dBm	960
		LTE FDD Data call Band 4 @+23dBm	830
		LTE FDD Data call Band 5 @+23dBm	680
		LTE FDD Data call Band 7 @+23dBm	800
		LTE FDD Data call Band 12 @+23dBm	600
		LTE FDD Data call Band 13 @+23dBm	750
		LTE FDD Data call Band 14 @+23dBm	650
		LTE FDD Data call Band 17 @+23dBm	630
		LTE FDD Data call Band 25 @+23dBm	950
		LTE FDD Data call Band 26 @+23dBm	680
		LTE FDD Data call Band 30 @+22dBm	1050
		LTE FDD Data call Band 66 @+23dBm	850
		LTE FDD Data call Band 71 @+23dBm	750
	LTE TDD	LTE TDD Data call Band 38 @+23dBm	980

Fibocom Confidential

Reproduction forbidden without Fibocom Wireless Inc. written authorization - All Rights Reserved.

Parameter	Mode	Condition	Typical Current (mA)
		LTE TDD Data call Band 41 @+23dBm	620
		LTE TDD Data call Band 48 @+21dBm	400

Note:

The above data is the average value obtained by testing the sample for high/medium/low channels.

In 5CA mode, the L860 power consumption is shown in the following table:

5CA Combination	Condition (Max Data Transfer)	Typical Current (mA)
2+46+46+46+46, 46+46+46+46+66, 2+5+5+30+66, 2+5+5+66+66, 2+2+46+46+46, 2+5+46+46+46, 2+13+46+46+46, 2+46+46+46+46, 2+46+46+46+66, 4+46+46+46+46, 5+46+46+46+66, 13+46+46+46+66, 46+46+46+66+66, 2+46+46+46+46, 5+46+46+46+46, 13+46+46+46+46, 41+41+41+41+41	Band 2 @+22dBm	1650
	Band 5 @+22dBm	1300
	Band 7 @+22dBm	1600
	Band 13 @+22dBm	1350
	Band 30 @+22dBm	1350
	Band 41 @+22dBm	1000
	Band 66 @+22dBm	1500

Note:

The data above is an average value tested on some samples at 25°C temperature.

3.3 Control Signal

The L860 module provides two control signals for power on/off and reset operations. The pin is defined in the following table:

Pin	Pin Name	I/O	Reset Value	Function	Type
6	FULL_CARD_POWER_OFF#	I	PU	Module power on/off input, internal pull up Power on: High/Floating Power off: Low	3.3/1.8V
67	RESET#	I	PU	WWAN reset input, internal pull up (10KΩ), active low	1.8V

Fibocom Confidential

Reproduction forbidden without Fibocom Wireless Inc. written authorization - All Rights Reserved.

Pin	Pin Name	I/O	Reset Value	Function	Type
50	PERST#	I	PU	Asserted to reset module PCIe interface default. If module went into core dump, it will reset whole module, not only PCIe interface. Active low, internal pull up (10KΩ)	3.3V

Note:

RESET# and PERST# need to be controlled by independent GPIO, and not shared with other devices on the host. RESET# and PERST# are sensitive signals, so they should keep away from RF interference and be protected by GND. It should be neither near PCB edge nor route on surface layer to avoid module abnormal reset caused by ESD.

3.3.1 Module Start-Up

3.3.1.1 Start-up Circuit

The FCPO# (FULL_CARD_POWER_OFF #) pin needs an external 3.3V or 1.8V pull up for booting up. AP (Application Processor) controls the module start-up. The recommended design is using a default PD port to control FCPO#. It also should reserve a 100K pull down resistor on AP side. The circuit design is shown in Figure3-4:

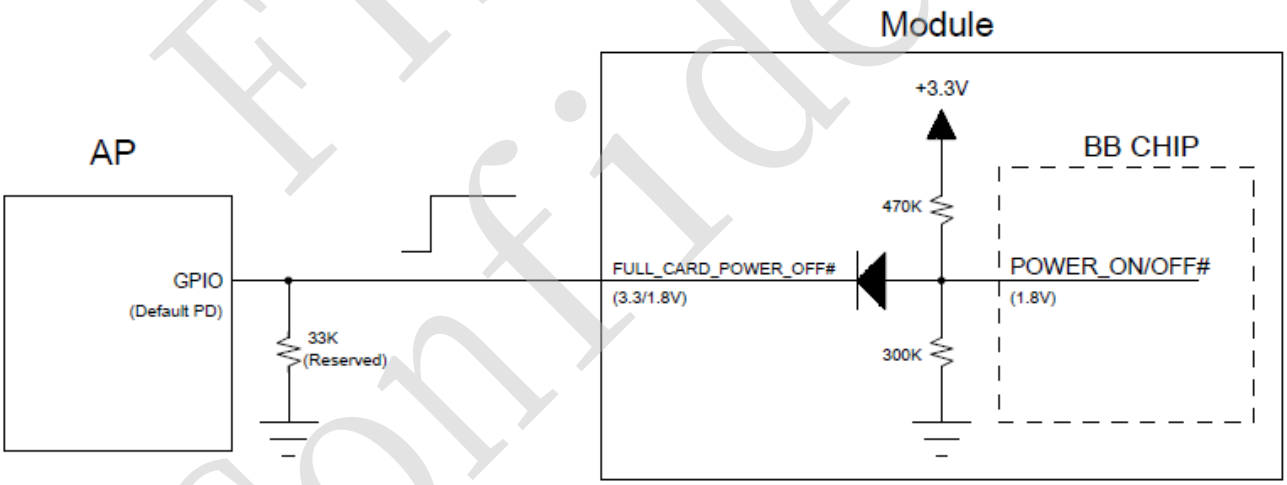

Figure 3-4 Circuit for module start-up controlled by AP

3.3.1.2 Start-up Timing Sequence

When power supply is ready, the PMU of module will power on and start initialization process by pulling high FCPO# signal. After about 15s, module will complete initialization process. The start-up timing is shown in Figure 3-5:

Reproduction forbidden without Fibocom Wireless Inc. written authorization - All Rights Reserved.

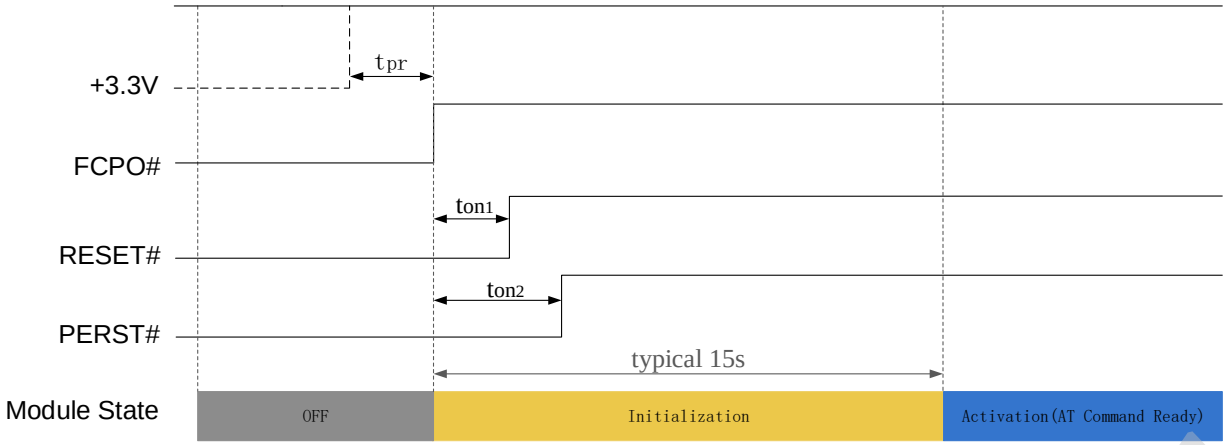

Figure 3-5 Timing control for start-up

Index	Min.	Recommended	Max.	Comment
t_{pr}	0ms	-	-	The delay time of power supply rising from 0V up to 3.135V. If power supply always ready, it can be ignored
t_{on1}	8ms	20ms	-	RESET# should be de-asserted after FCPO#
t_{on2}	50ms	100ms	-	The time delay of PERST# de-asserted after FCPO#, PERST# must always be the last to get de-asserted

3.3.2 Module Shutdown

The module can be shut down by the following controls:

Shutdown Control	Action	Condition
Software	Sending AT+CFUN=0 command	Normal shutdown (recommend)
Hardware	Pull down FCPO# pin	Only used when a hardware exception occurs and the software control cannot be used.

Module can be shut down by sending AT+CFUN=0 command. When the module receives the software shutdown command, the module will start the finalization process (the reverse process of initialization), and it will be completed after t_{sd} time (t_{sd} is the time which AP receive OK of “AT+CFUN=0”, if there is no response, the max t_{sd} is 5s). In the finalization process, the module will save the network, SIM card and some other parameters from memory, and then clear the memory and shut down PMU. The control timing is shown in Figure 3-6:

Fibocom Confidential

Reproduction forbidden without Fibocom Wireless Inc. written authorization - All Rights Reserved.

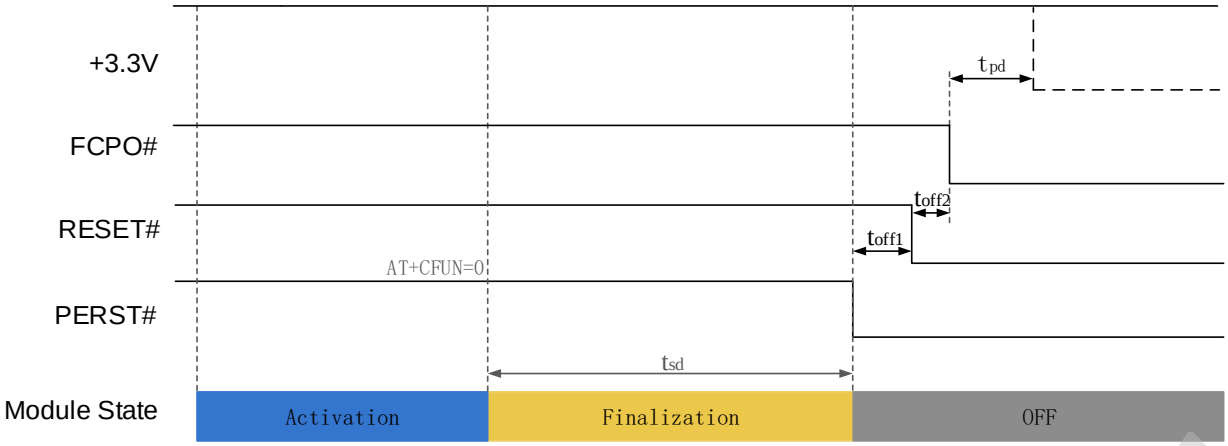

Figure 3-6 Shutdown timing control

Index	Min.	Recommended	Max.	Comment
t_{off1}	16ms	20ms	-	RESET# should be asserted after PERST#
t_{off2}	2ms	10ms	-	FCPO# should be asserted after RESET#
t_{pd}	10ms	100ms	-	+3.3V power supply goes down time. If power supply is always on, it can be ignored

3.3.3 Module Reset

The L860 module can reset to its initial status by pulling down the RESET# signal for more than 2ms (10ms is recommended), and module will restart after RESET# signal is released. When customer executes RESET# function, the PMU remains its power inside the module. The recommended circuit design is shown in the Figure 3-7:

Fibocom Confidential

Reproduction forbidden without Fibocom Wireless Inc. written authorization - All Rights Reserved.

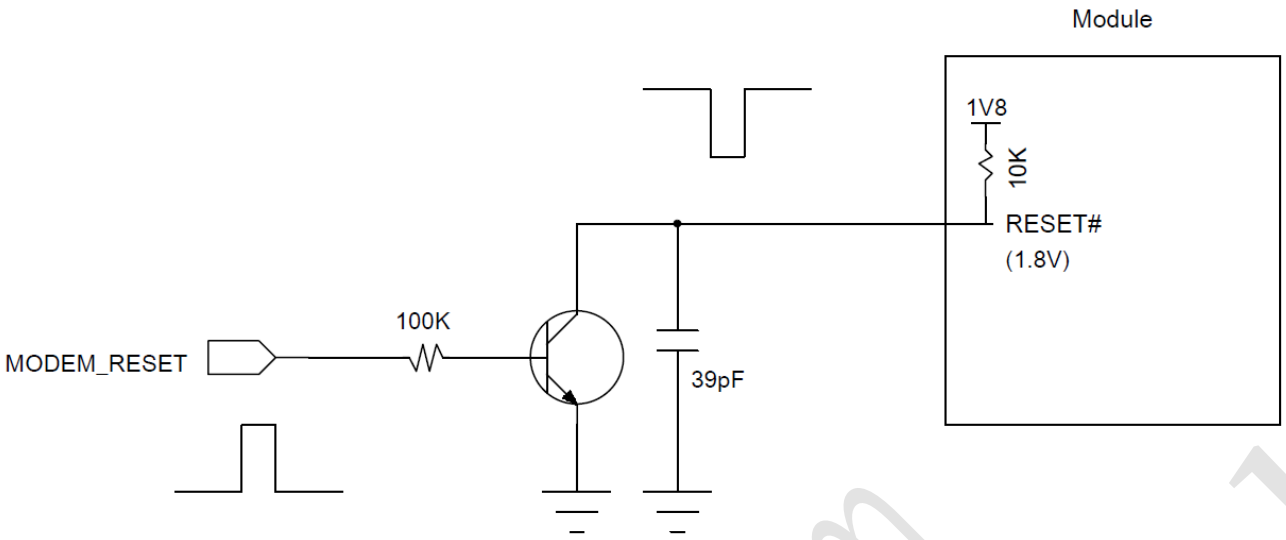

Figure 3-7 Recommended design for reset circuit

There are two reset control timings as below:

- Reset timing 1st in Figure 3-8, PMU of module internal always on in reset sequence, recommend using in FW upgrade and module recovery;
- Reset timing 2nd in Figure 3-9, PMU of module internal will be off in reset sequence (including whole power off and power on sequence, t_{sd} can refer section 3.3.2), recommend using in system warm boot.

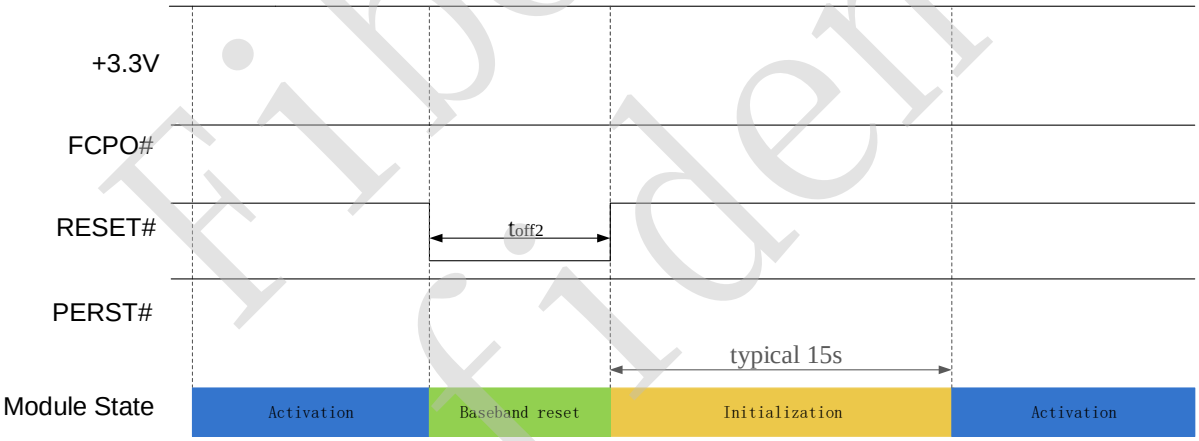

Figure 3-8 Reset control timing1st

Fibocom Confidential

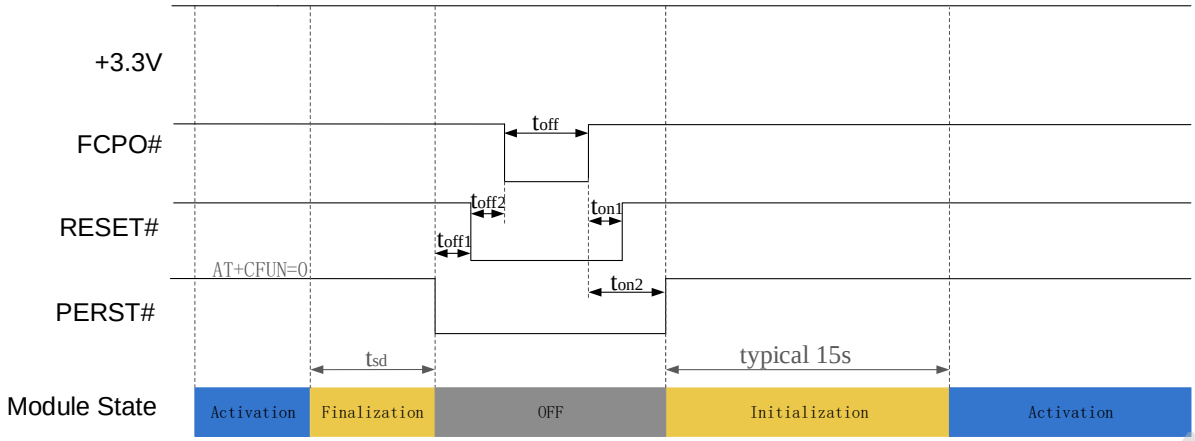

Figure 3-9 Reset control timing2nd

Index	Min.	Recommended	Max.	Comment
t_{off1}	16ms	20ms	-	RESET# should be asserted after PERST#, refer section 3.3.2
t_{off2}	2ms	10ms	-	FCPO# should be asserted after RESET#, refer section 3.3.2
t_{off}	500ms	500ms	-	Time to allow the WWAN module to fully discharge any residual voltages before the pin could be de-asserted again. This is required for both Pre-OS as well as Runtime flow
t_{on1}	8ms	20ms	-	RESET# should be de-asserted after FCPO#, refer section 3.3.1.2
t_{on2}	50ms	100ms	-	The time delay of PERST# de-asserted after FCPO#, PERST# must always be the last to get de-asserted. refer section 3.3.1.2

3.3.4 PCIe Link State

Modem has the lowest power consumption in D0 L1.2 PCIe link state. $D3_{cold}$ L2 will increase extra about 0.5mA power consumption. CLKREQ# can assert or de-assert in $D3_{cold}$ L2, but CLKREQ# shouldn't be changed again during $D3_{cold}$ L2. When CLKREQ# asserts in $D3_{cold}$ L2, it will increase extra 0.3mA power consumption compared with CLKREQ# de-asserted in $D3_{cold}$ L2. We recommend keep CLKREQ# de-asserted in $D3_{cold}$ L2.

PCIe Link State	PERST#	CLKREQ#	Power Consumption (mA)	Description
D0 L1.2	H	H	I_{sleep}	Refer 3.2.3 Power Consumption
$D3_{cold}$ L2	L	H	I_{sleep}+0.5	The extra 0.5mA is consumed on PERST# pull down

Fibocom confidential

Reproduction forbidden without Fibocom Wireless Inc. written authorization - All Rights Reserved.

PCIe Link State	PERST#	CLKREQ#	Power Consumption (mA)	Description
	L	L	I_{sleep}+0.8	The extra 0.3mA is consumed on CLKREQ# pull down

3.3.4.1 D0 L1.2

Module supports PCIe goes into D0 L1.2 state in Win10 system. The D0->D0 L1.2@S0/S0ix->D0 timing is shown in Figure 3-10:

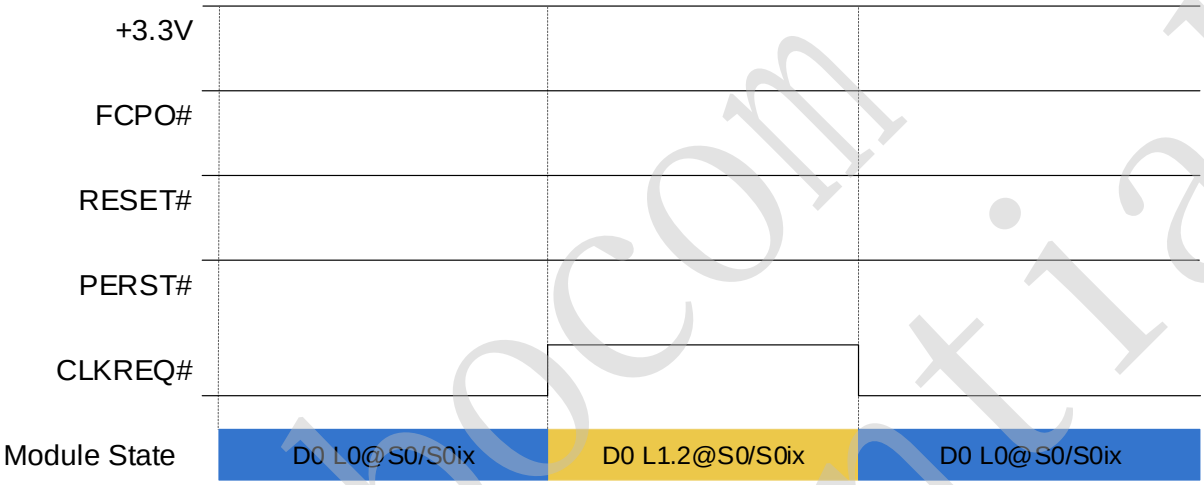

Figure 3-10 D0 L1.2 timing

3.3.4.2 $D3_{cold}$ L2

Module supports PCIe goes into $D3_{cold}$ L2 state in Win10 system. The D0->$D3_{cold}$ L2@S0/S0ix ->D0 timing is shown in Figure 3-11 and Figure 3-12:

Fibocom Confidential

Reproduction forbidden without Fibocom Wireless Inc. written authorization - All Rights Reserved.

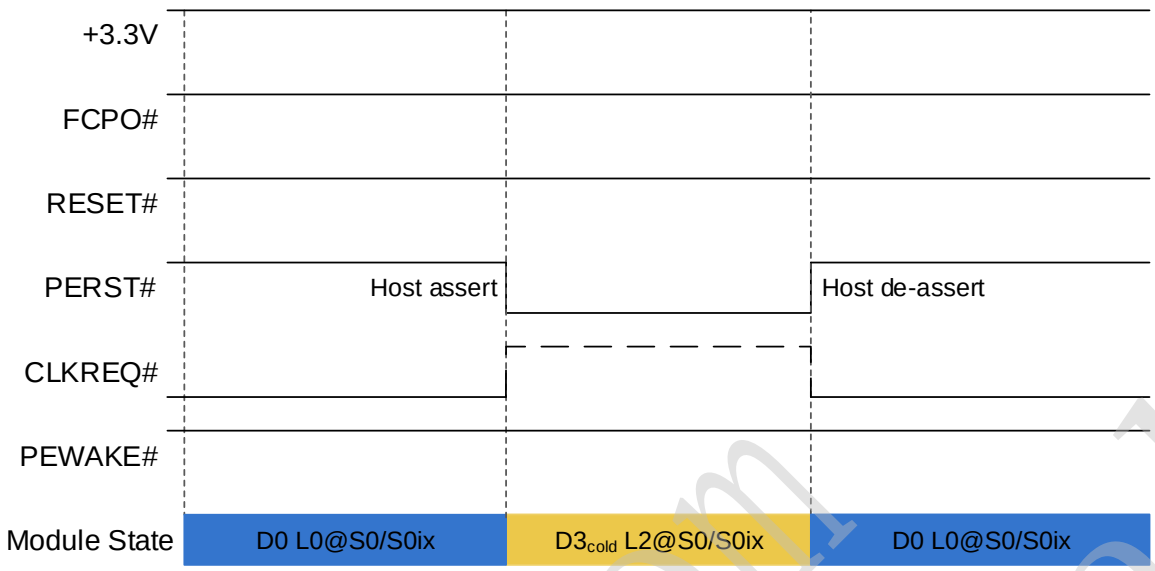

Figure 3-11 $D3_{cold}$ L2 timing (Host wakeup)

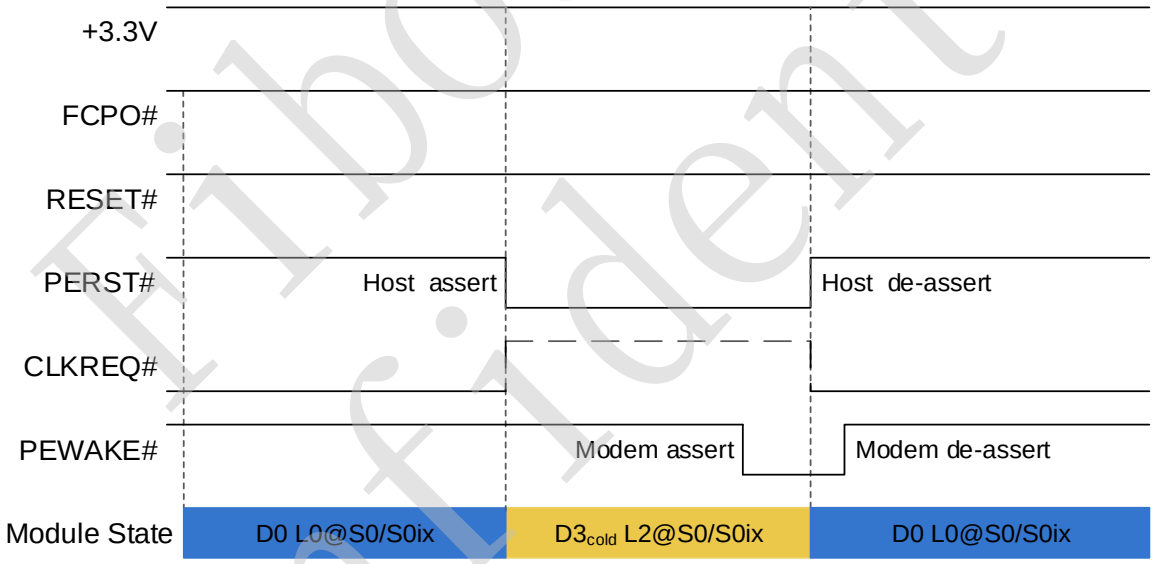

Figure 3-12 $D3_{cold}$ L2 timing (Modem wakeup)

Fibocom Confidential

Reproduction forbidden without Fibocom Wireless Inc. written authorization - All Rights Reserved.

3.3.5 Timing Application

The recommended timing application in Win10 OS is as below table:

System status		Timing Application
S0ix (Modem standby)	D0 L1.2	Refer to section 3.3.4.1 Figure 3-10 D0 L1.2 timing
	$D3_{cold}$ L2	Refer to section 3.3.4.2 Figure 3-11/3-12 $D3_{cold}$ L2 timing
S3, S4, S5	Power on (back to S0)	Refer to section 3.3.1.2 Figure 3-5 Timing control for start-up
	Power off (out of S0)	Refer to section 3.3.2 Figure 3-6 Shutdown timing control
G3 boot	Power on	Refer to section 3.3.1.2 Figure 3-5 Timing control for start-up
Warm boot		Refer to section 3.3.3 Figure 3-9 Reset control timing2nd
Modem FW upgrade / Modem recovery		Refer to section 3.3.3 Figure 3-8 Reset control timing1st

Intel X86 platforms must follow the table above. AMD X86 platforms should follow the table above and meet the special request of platform itself.

The recommended timing application in Chrome/Android/Linux OS is as below table:

System status	Timing Application
Power on	Refer to section 3.3.1.2 Figure 3-5 Timing control for start-up
Shut down	Refer to section 3.3.2 Figure 3-6 Shutdown timing control
Connect standby	Refer to section 3.3.4.1 Figure 3-10 D0 L1.2 timing / section 3.3.4.2 Figure 3-11/12 $D3_{cold}$ L2 timing
Restart	Refer to section 3.3.3 Figure 3-9 Reset control timing2nd
Modem FW upgrade / Modem recovery	Refer to section 3.3.3 Figure 3-8 Reset control timing1st

3.4 PCIe Interface

L860 module supports PCIe Gen2, one lane for data transmission channel. It is also compatible with PCIe Gen1. After L860 module is inserted into PC, PCIe interface can work with the driver, and then map a MBIM port and a GNSS port in Win10 & Linux system. MBIM interface is used for initiating data service in Win10 & Linux system and GNSS interface is used for receiving GNSS data.

Fibocom Confidential

Reproduction forbidden without Fibocom Wireless Inc. written authorization - All Rights Reserved.

3.4.1 PCIe Interface Definition

Pin#	Pin Name	I/O	Reset Value	Description	Type
41	PETn0	O	-	PCIe TX differential signal Negative	-
43	PETP0	O	-	PCIe TX differential signal Positive	-
47	PERn0	I	-	PCIe RX differential signal Negative	-
49	PERP0	I	-	PCIe RX differential signal Positive	-
53	REFCLKN	I	-	PCIe reference clock signal Negative	-
55	REFCLKP	I	-	PCIe reference clock signal Positive	-
50	PERST#	I	PU	Asserted to reset module PCIe interface default. If module went into coredump, it will reset whole module, not only PCIe interface. Active low, internal pull up (10KΩ)	3.3V
52	CLKREQ#	I/O	PU	Asserted by device to request a PCIe reference clock be available (active clock state) in order to transmit data. It also used by L1 PM Sub states mechanism, asserted by either host or device to initiate an L1 exit. Active low, internal pull up (10KΩ)	3.3V
54	PEWAKE#	O	L	Asserted to wake up system and reactivate PCIe link from L2 to L0, it depends on system whether supports wake up functionality. Active low, open drain output and should add external pull up (100KΩ) on platform	3.3V

Fibocom Confidential

Reproduction forbidden without Fibocom Wireless Inc. written authorization - All Rights Reserved.

3.4.2 PCIe Interface Application

The reference circuit is shown in Figure 3-12:

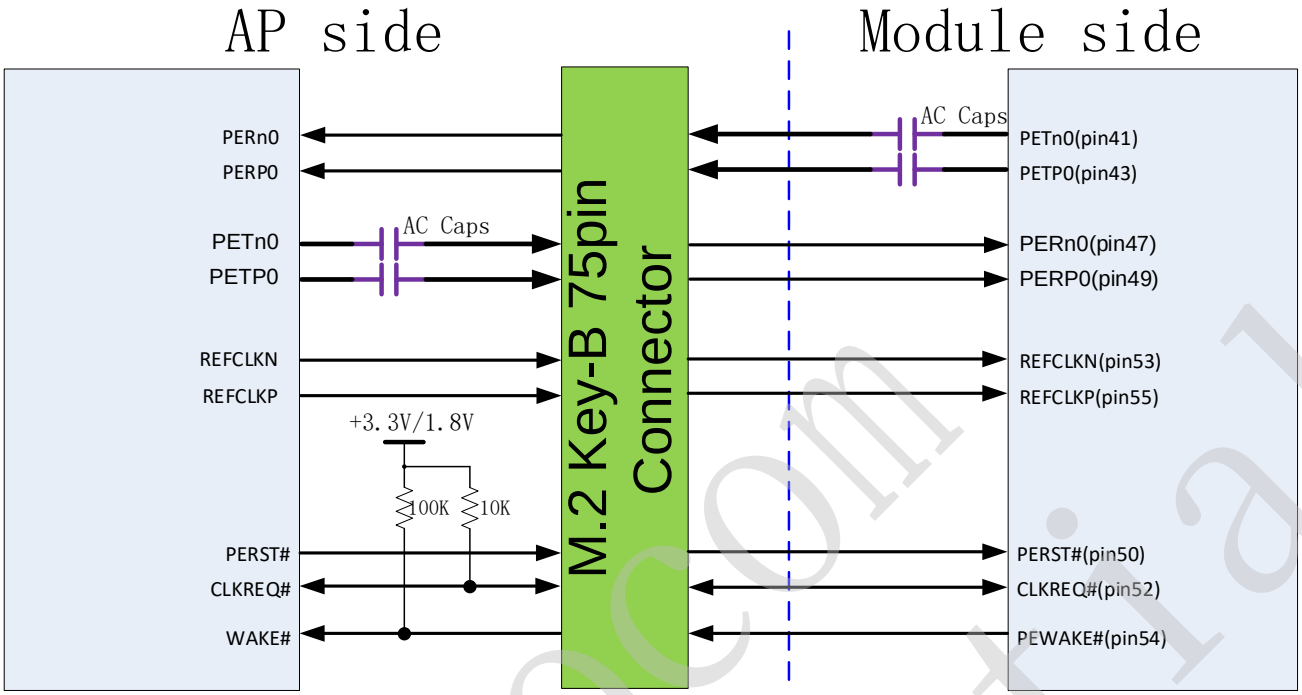

Figure 3-12 Reference circuit for PCIe interface

L860 module supports PCIe Gen2 interface, including three differential pairs: transmit pair TXP/N, receiving pair RXP/N and clock pair CLKP/N.

PCIe can achieve the maximum transmission rate of 5 GT/s, and must strictly follow the rules below in PCB Layout:

- The differential signal pair lines should be parallel and equal in length.
- The differential signal pair lines should be short if possible and be controlled within 15 inches (380 mm) for AP end.
- The impedance of differential signal pair lines is recommended to be 100Ω, and can be controlled to 80-120Ω in accordance with PCIe protocol.
- Try to avoid the discontinuous reference ground, such as segment and space;
- When the differential signal lines go through different layers, the via hole of grounding signal should be in close to that of signal, and generally, each pair of signals require 1-3 grounding signal via holes and the lines should never cross the segment of plane.
- Try to avoid bended lines and avoid introducing common-mode noise in the system, which will influence the signal integrity and EMI of difference pair. As shown in Figure 3-13, the bending angle of all lines should be equal or greater than 135°, the spacing between difference pair lines should be larger than 20mil, and the line caused by bending should be greater than 1.5 times line width at least. When a serpentine line is used for length match with another line, the bended length of each segment should be at least 3 times the line width (≥ 3W). The largest spacing between the bended part of the

Fibocom Confidential

Reproduction forbidden without Fibocom Wireless Inc. written authorization - All Rights Reserved.

serpentine line and another one of the differential lines must be less than 2 times the spacing of normal differential lines (S1 < 2S).

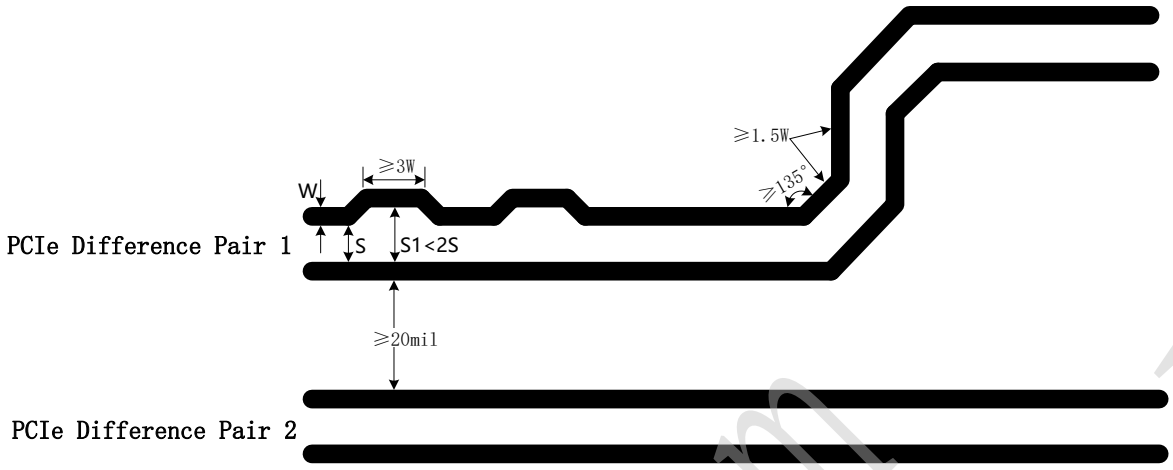

Figure 3-13 Requirement of PCIe line

The difference in length of two data lines in difference pair should be within 5mil, and the length match is required for all parts. When the length match is conducted for the differential lines, the designed position of correct match should be close to that of incorrect match, as shown in Figure 3-14. However, there is no specific requirements for the length match of transmit pair and receiving pair, which means the length match is only required by intra differential pair rather than inter differential pair.

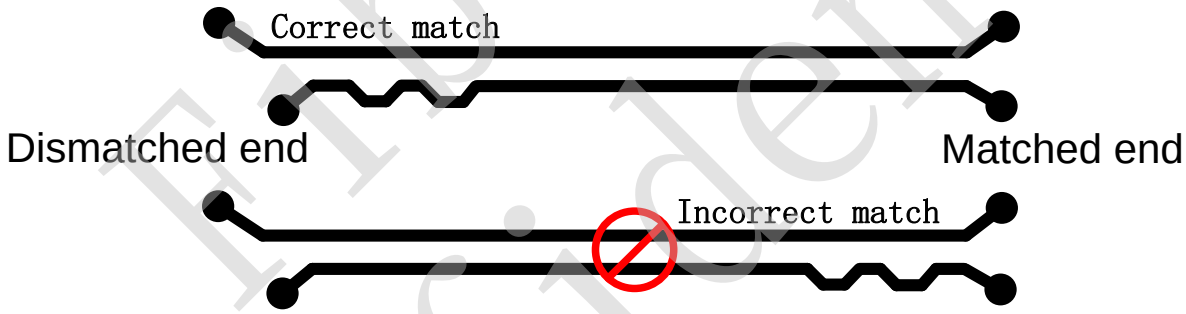

Figure 3-14 Length match design of PCIe differential pair

3.5 USIM Interface

The L860 module support dual SIM card single standby, with one built-in USIM card interface, which supports 1.8V and 3V SIM cards.

Fibocom Confidential

Reproduction forbidden without Fibocom Wireless Inc. written authorization - All Rights Reserved.

3.5.1 USIM1 Pins

The USIM1 pins description is shown in the following table:

Pin	Pin Name	I/O	Reset Value	Description	Type
36	UIM_PWR	PO	-	USIM power supply	1.8V/3V
30	UIM_RESET	O	L	USIM reset	1.8V/3V
32	UIM_CLK	O	L	USIM clock	1.8V/3V
34	UIM_DATA	I/O	L	USIM data, internal pull up (4.7KΩ)	1.8V/3V
66	SIM_DETECT	I	PD	USIM card detect, internal 390K pull-up. Active high, and high level indicates SIM card is inserted; and low level indicates SIM card is detached.	1.8V

3.5.2 USIM Interface Circuit

3.5.2.1 N.C. SIM Card Slot

The reference circuit design for N.C. (Normally Closed) SIM card slot is shown in Figure 3-15:

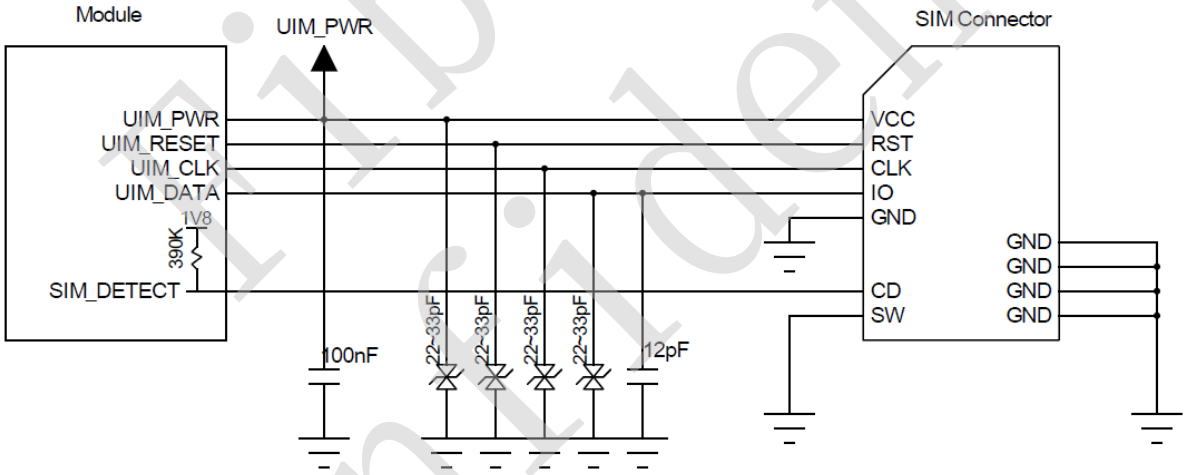

Figure 3-15 Reference circuit for N.C. SIM card slot

The principles of the N.C.SIM card slot are described as follows:

- When the SIM card is detached, it connects the short circuit between CD and SW pins, and drives the SIM_DETECT pin low.
- When the SIM card is inserted, it connects an open circuit between CD and SW pins, and drives the SIM_DETECT pin high.

Fibocom Confidential

Reproduction forbidden without Fibocom Wireless Inc. written authorization - All Rights Reserved.

3.5.2.2 N.O. SIM Card Slot

The reference circuit design for N.O. (Normally Open) SIM card slot is shown in Figure 3-16:

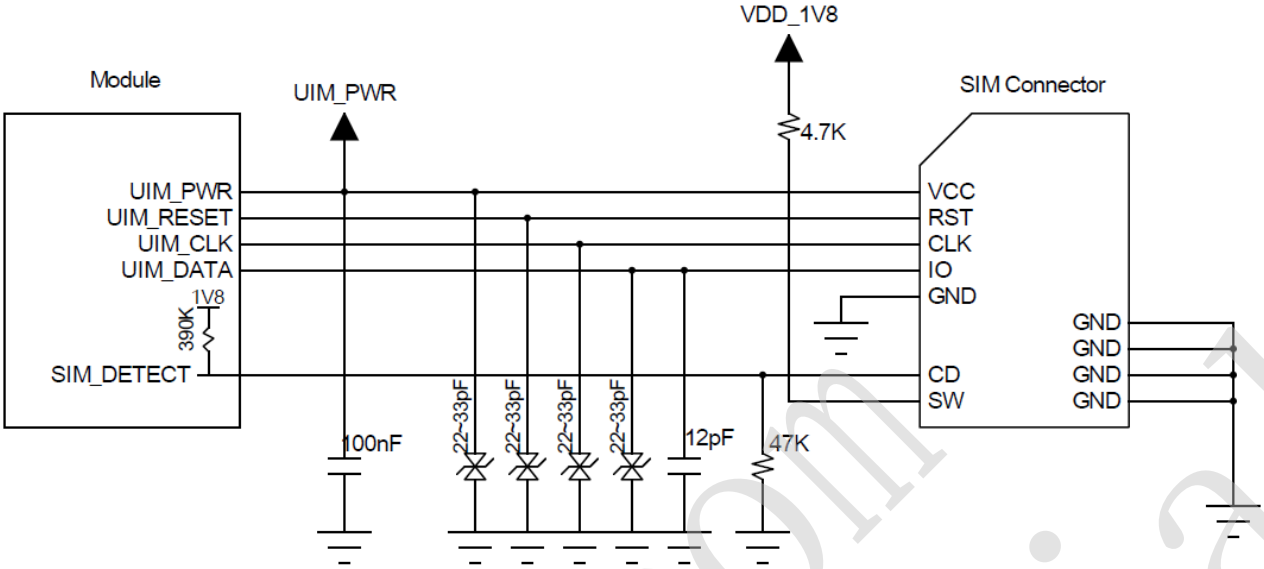

Figure 3-16 Reference circuit for N.O. SIM card slot

The principles of the N.O.SIM card slot are described as follows:

- When the SIM card is detached, it connects an open circuit between CD and SW pins, and drives the SIM_DETECT pin low.
- When the SIM card is inserted, it connects the short circuit between CD and SW pins, and drives the SIM_DETECT pin high.

3.5.3 USIM Hot-Plug

The L860 module supports the SIM card hot-plug function, which determines whether the SIM card is inserted or detached by detecting the SIM_DETECT pin state of the SIM card slot.

The SIM card hot-plug function can be configured by “AT+MSMPD” command, and the description for AT command is shown in the following table:

AT Command	Hot-plug Detection	Function Description
AT+MSMPD=1	Enable	Default value, the SIM card hot-plug detection function is enabled. The module can detect whether the SIM card is inserted or not through the SIM_DETECT pin state.
AT+MSMPD=0	Disable	The SIM card hot-plug detect function is disabled. The module reads the SIM card when starting up, and the SIM_DETECT status will not be detected.

After the SIM card hot-plug detection function is enabled, the module detects that the SIM card is inserted

Reproduction forbidden without Fibocom Wireless Inc. written authorization - All Rights Reserved.

when the SIM_DETECT pin is high, then executes the initialization program and finish the network registration after reading the SIM card information. When the SIM_DETECT pin is low, the module determines that the SIM card is detached and does not read the SIM card.

Note:
SIM_DETECT is active high. It can be swapped to active low by AT CMD.

3.5.4 USIM Design

The SIM card circuit design should meet the EMC standards and ESD requirements with the improved capability to resist interference, to ensure that the SIM card can work stably. The following guidelines should be noted in design:

- The SIM card slot should be placed as close as possible to the module, and away from the RF antenna, DC/DC power supply, clock signal lines, and other strong interference sources.
- The SIM card slot with a metal shielding housing can improve the anti-interference ability.
- The trace length between the SIM card slot and the module should not exceed 100mm, or it could reduce the signal quality.
- The UIM_CLK and UIM_DATA signal lines should be isolated by GND to avoid crosstalk interference. If it is difficult for the layout, the whole SIM signal lines should be wrapped with GND as a group at least.
- The filter capacitors and ESD devices for SIM card signals should be placed near to the SIM card slot, and the ESD devices with 22-33pF capacitance should be used.

3.6 Status Indicator

The L860 module provides two signals to indicate the operating status of the module, and the status indicator pins are shown in the following table:

Pin	Pin Name	I/O	Reset Value	Pin Description	Type
10	LED1#	O	T	System status LED, drain output.	3.3V
23	WOWWAN#	O	PD	Module wakes up Host (AP), reserved	1.8V

3.6.1 LED#1 Signal

The LED#1 signal is used to indicate the operating status of the module, and the detailed description is shown in the following table:

Module Status	LED1# Signal
RF function ON	Low level (LED on)
RF function OFF	High level (LED off)

Fibocom Confidential

Reproduction forbidden without Fibocom Wireless Inc. written authorization - All Rights Reserved.

The LED driving circuit is shown in Figure 3-17:

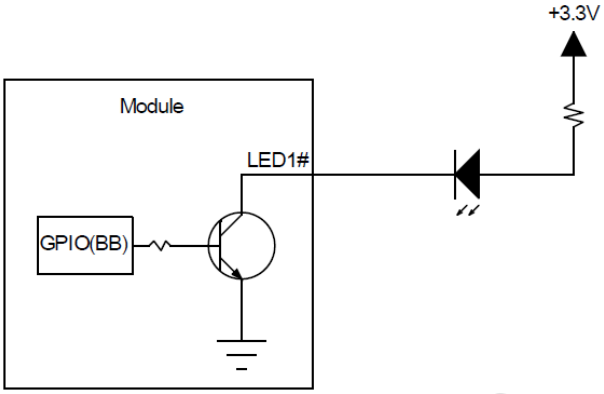

Figure 3-17 LED driving circuit

Note:

The resistance of LED current-limiting resistor is selected according to the driving voltage and the driving current.

3.6.2 WOWWAN#

The WOWWAN# signal is used to wake the Host (AP) when there comes the data request. The definition of WOWWAN# signal is as follows:

Operating Mode	WOWWAN# Signal
SMS or data requests	Pull low 1s then pull high (pulse signal).
Idle/Sleep	High level

The WOWWAN# timing is shown in Figure 3-18:

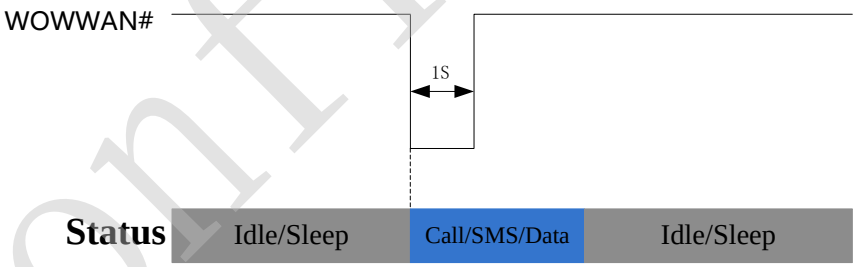

Figure 3-18 WOWWAN# timing

Note:

SMS wake-up host need send AT command: AT+GTSMSFILTERWUPEN=1 to enable this function.

Fibocom Confidential

Reproduction forbidden without Fibocom Wireless Inc. written authorization - All Rights Reserved.

3.7 Interrupt Control

The L860 module provides four interrupt signals, and the pin definition is as follows:

Pin	Pin Name	I/O	Reset Value	Pin Description	Type
8	W_DISABLE1#	I	PD	Enable/Disable RF network	3.3/1.8V
25	DPR	I	PD	BodySAR detection	3.3/1.8V
26	W_DISABLE2#	I	PD	GNSS disable signal Reserved	3.3/1.8V
68	ANT_CONFIG	I	PD	Host antenna configuration detection Reserved	1.8V

3.7.1 W_DISABLE1#

The module provides a hardware pin to enable/disable WWAN RF function, and the function can also be controlled by the AT command. The module enters into the flight mode after the RF function is disabled. The definition of W_DISABLE1# signal is as below table:

W_DISABLE1# Signal	Function
High/Floating	WWAN function is enabled, the module exits the flight mode.
Low	WWAN function is disabled, the module enters flight mode.

Note:

The function of W_DISABLE1# is enabled by default. It can be disabled by customer's request.

3.7.2 BODYSAR

The L860 module supports BodySAR function by detecting the DPR pin. The voltage level of DPR is high by default, and when the SAR sensor detects the closing human body, the DPR signal will be pulled down. As the result, the module then lowers down its emission power to its default threshold value, thus reducing the RF radiation on the human body. The threshold of emission power can be set by the AT Commands. The definition of DPR signal is shown in the following table:

DPR Signal	Function
High/Floating	The module keeps the default emission power
Low	Lower the maximum emission power to the threshold value of the module.

Fibocom confidential

Reproduction forbidden without Fibocom Wireless Inc. written authorization - All Rights Reserved.

3.7.3 ANT_CONFIG

L860 module can be configured to support dual antennas or 4 antennas by detecting the ANT_CONFIG pin. ANT_CONFIG is an input port which is pulled high internal in default. When ANT_CONFIG is high level, then module supports dual antennas (Main & D/G ANT). When module detects low level of ANT_CONFIG, then module will be configured to support 4 antennas. The definition of ANT_CONFIG signal is shown as below table:

ANT_CONFIG Signal	Function
High/Floating	Support dual antennas (Main & D/G ANT)，Reserved
Low	Support 4 antennas (Reserved)

3.8 ANT Tunable Interface

The module supports ANT Tunable interfaces with two different control modes, i.e. MIPI interface and 4bit GPO interface. Through cooperating with external antenna adapter switch via ANT Tunable, it can flexibly configure the bands of LTE antenna to improve the antenna's working efficiency and save space for the antenna.

Pin	Pin Name	I/O	Pin Description	Type
56	RFFE_SCLK	O	Tunable ANT control, MIPI Interface, RFFE clock	1.8V
58	RFFE_SDATA	I/O	Tunable ANT control, MIPI Interface, RFFE data	1.8V
59	ANTCTL0	O	Tunable ANT control, GPO interface, Bit0	1.8V
61	ANTCTL1	O	Tunable ANT control, GPO interface, bit1	1.8V
63	ANTCTL2	O	Tunable ANT control, GPO interface, Bit2	1.8V
65	ANTCTL3	O	Tunable ANT control, GPO interface, Bit3	1.8V

Fibocom Confidential

Reproduction forbidden without Fibocom Wireless Inc. written authorization - All Rights Reserved.

3.9 Configuration Interface

The L860 module provides four pins for the configuration as the WWAN-PCIe, type M.2 module:

Pin	Pin Name	I/O	Reset Value	Pin Description	Type
1	CONFIG_3	O	-	NC	-
21	CONFIG_0	O	-	NC	-
69	CONFIG_1	O	L	Internally connected to GND	-
75	CONFIG_2	O	-	NC	-

The M.2 module configuration is shown in the following table:

Config_0 (pin21)	Config_1 (pin69)	Config_2 (pin75)	Config_3 (pin1)	Module Type and Main Host Interface	Port Configuration
NC	GND	NC	NC	WWAN - PCIe Gen2	Vendor defined

Please refer to PCI Express M.2 Specification Rev1.2" for more details.

3.10 I2C Interface

The L860 module support I2C interface.

3.10.1 I2C Pins

Pin	Pin Name	I/O	Reset Value	Description	Type
40	I2C_SCL	I	PU	Master I2C1 CLK	1.8V
42	I2C_SDA	I/O	PU	Master I2C1 DATA	1.8V
44	I2C_IRQ#	O	PD	I2C1 INT, Wake up I2C HOST	1.8V

Note: L860 works as a slave device.

Fibocom Confidential

Reproduction forbidden without Fibocom Wireless Inc. written authorization - All Rights Reserved.

4 Radio Frequency

4.1 RF Interface

4.1.1 RF Interface Functionality

The L860 module supports four RF connectors used for external antenna connection. As the Figure 4-1 shows, “M” is for Main antenna, which is used to receive and transmit RF signal; “D/G” is for Diversity antenna, which is used to receive the diversity RF signal. “M1” and “M2” are used for support 4x4 MIMO data transfer.

Figure 4-1 RF connectors

4.1.2 RF Connector Characteristic

Rated Condition		Environment Condition
Frequency Range	DC-6GHz	Temperature Range: –40°C-+85°C
Characteristic Impedance	50Ω	

4.1.3 RF Connector Dimension

L860 module uses standard M.2 RF connectors. The RF connector part number is 818004607 manufactured by ECT corporation, and the size is 2×2×0.6mm. The connector dimension is shown as

Fibocom Confidential

Reproduction forbidden without Fibocom Wireless Inc. written authorization - All Rights Reserved.

following picture:

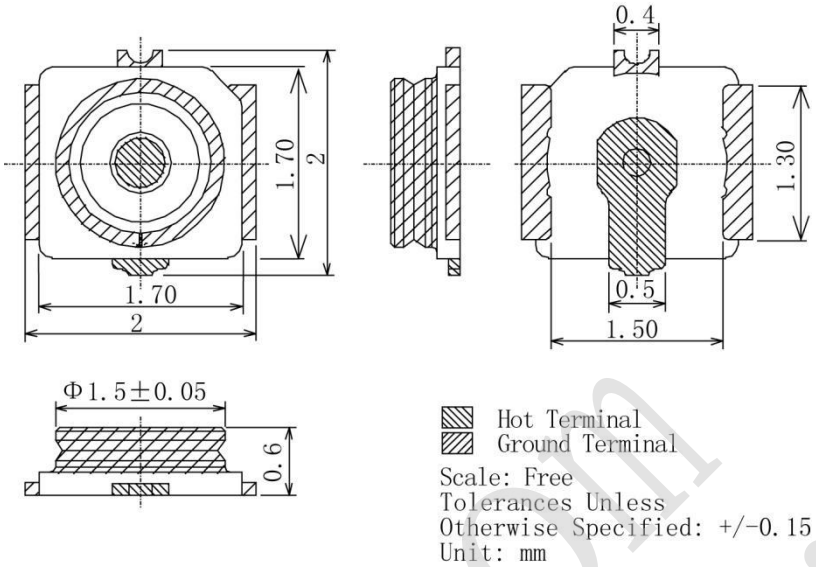

Figure 4-2 RF connector dimensions

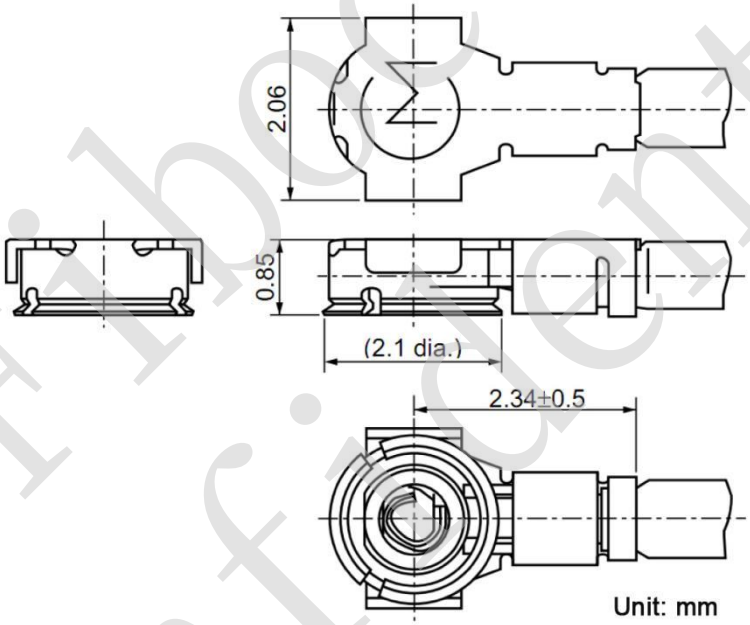

Figure 4-3 0.81mm coaxial antenna dimensions

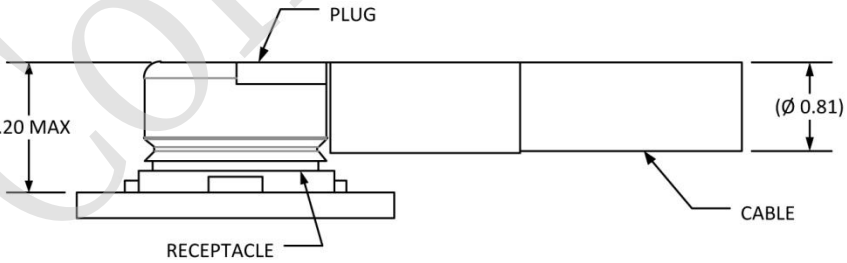

Figure 4-4 Schematic diagram of 0.81mm coaxial antenna connected to the RF connector

Fibocom Confidential

Reproduction forbidden without Fibocom Wireless Inc. written authorization - All Rights Reserved.

4.1.4 RF Connector Assembly

Mate RF connector parallel refer Figure 4-5, do not slant mate with strong force.

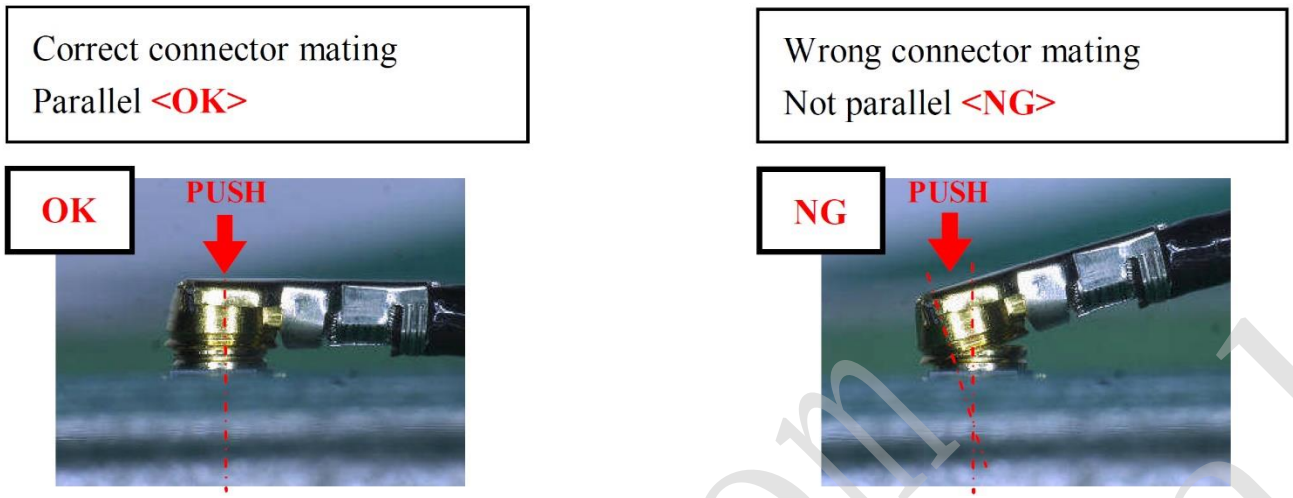

Figure 4-5 Mate RF connector

To avoid damage in RF connector unmating, it is recommended using pulling JIG as Figure 4-6, and the pulling JIG must be lifted up vertically to PCB surface (see Figure 4-7 and 4-8).

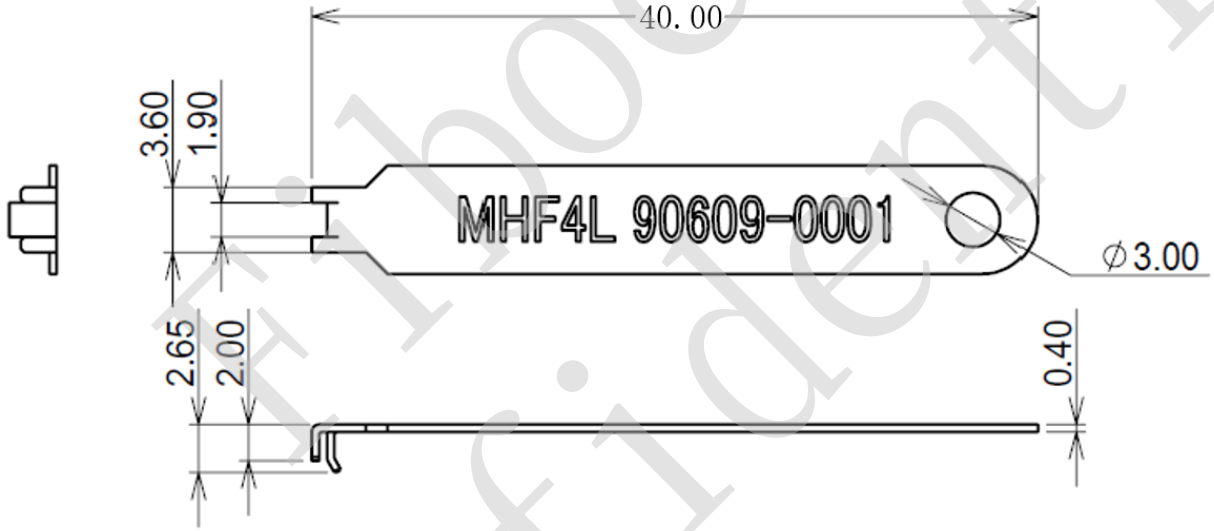

Figure 4-6 Pulling JIG

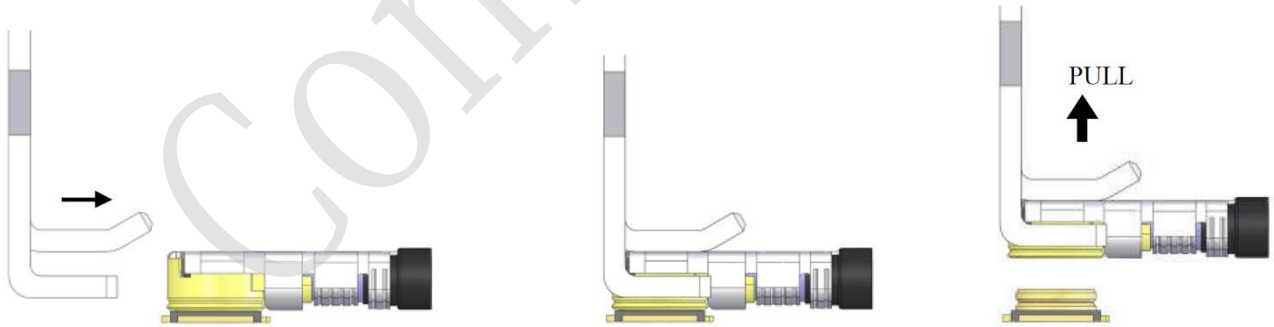

Figure 4-7 Lift up pulling JIG

Fibocom Confidential

Reproduction forbidden without Fibocom Wireless Inc. written authorization - All Rights Reserved.

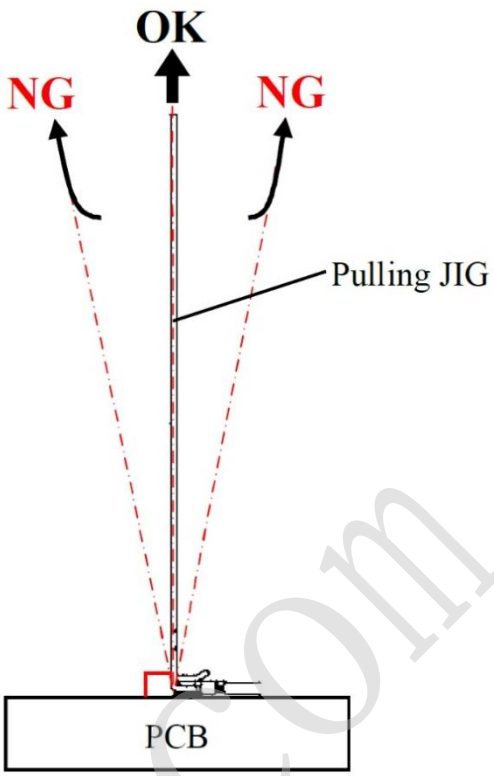

Figure 4-8 Pulling direction

4.2 Operating Band

The operating bands of L860 module are shown in the following table:

Operating Band	Description	Mode	Tx (MHz)	Rx (MHz)
Band 2	1900MHz	LTE FDD/WCDMA	1850-1910	1930-1990
Band 4	1700MHz	LTE FDD/WCDMA	1710-1755	2110-2155
Band 5	850MHz	LTE FDD/WCDMA	824-849	869-894
Band 7	2600Mhz	LTE FDD	2500-2570	2620-2690
Band 12	700MHz	LTE FDD	699-716	729-746
Band 13	700MHz	LTE FDD	777-787	746-756
Band 14	700MHz	LTE FDD	788-798	758-768
Band 17	700MHz	LTE FDD	704-716	734-746
Band 25	1900MHz	LTE FDD	1850-1915	1930-1995
Band 26	850MHz	LTE FDD	814-849	859-894
Band 29	700MHz	LTE FDD	N/A	716-728
Band 30	2300MHz	LTE FDD	2305-2315	2350-2360

Fibocom Confidential

Reproduction forbidden without Fibocom Wireless Inc. written authorization - All Rights Reserved.

Operating Band	Description	Mode	Tx (MHz)	Rx (MHz)
Band 66	1700MHz	LTE FDD	1710-1780	2110-2200
Band 71	680MHz	LTE FDD	663-698	617-652
Band 38	2600MHz	LTE TDD	2570-2620	
Band 41	2500MHZ	LTE TDD	2496-2690	
Band 48	3600MHZ	LTE TDD	3550-3700	
Band 46	5200MHZ	LTE TDD	N/A	5150-5925
GPS L1	-	-	-	1575.42±1.023
GLONASS L1	-	-	-	1602.5625±4
BDS	-	-	-	1561.098±2.046
Galileo	-	-	-	1575.42±1.023

4.3 Transmitting Power

The transmitting power for each band of L860 module is shown in the following table:

Mode	Band	3GPP Requirement (dBm)	Tx Power (dBm)	Note
WCDMA	Band 2	24+1.7/-3.7	23.5±1	-
	Band 4	24+1.7/-3.7	23.5±1	-
	Band 5	24+1.7/-3.7	23.5±1	-
LTE FDD	Band 2	23±2.7	23±1	10MHz Bandwidth, 1 RB
	Band 4	23±2.7	23±1	10MHz Bandwidth, 1 RB
	Band 5	23±2.7	23+2/-1	10MHz Bandwidth, 1 RB
	Band 7	23±2.7	23±1	10MHz Bandwidth, 1 RB
	Band 12	23±2.7	23+2/-1	10MHz Bandwidth, 1 RB
	Band 13	23±2.7	23+2/-1	10MHz Bandwidth, 1 RB
	Band 14	23±2.7	23+2/-1	10MHz Bandwidth, 1 RB
	Band 17	23±2.7	23+2/-1	10MHz Bandwidth, 1 RB
	Band 25	23±2.7	23±1	10MHz Bandwidth, 1 RB
	Band 26	23±2.7	23+2/-1	10MHz Bandwidth, 1 RB
	Band 30	23±2.7	22±1	10MHz Bandwidth, 1 RB

Fibocom Confidential

Reproduction forbidden without Fibocom Wireless Inc. written authorization - All Rights Reserved.

Mode	Band	3GPP Requirement (dBm)	Tx Power (dBm)	Note
	Band 66	23±2.7	23±1	10MHz Bandwidth, 1 RB
	Band 71	23+2.7/-3.2	23+2/-1	10MHz Bandwidth, 1 RB
LTE TDD	Band 38	23±2.7	23±1	10MHz Bandwidth, 1 RB
	Band 41	23±2.7	23±1	10MHz Bandwidth, 1 RB
	Band 41 HPUE	26±2.7	25+2/-1	10MHz Bandwidth, 1 RB
	Band 48	23+3/-4	21±1	10MHz Bandwidth, 1 RB

4.4 Receiver Sensitivity

4.4.1 Dual Antennas Receiver Sensitivity

All bands support dual antennas, the receiver sensitivity for each band of L860 module is shown in below table:

Mode	Band	3GPP Requirement (dBm)	Rx Sensitivity (dBm) Typical	Note
WCDMA	Band 2	-104.7	-110.6	BER < 0.1%
	Band 4	-106.7	-110	BER < 0.1%
	Band 5	-104.7	-111.4	BER < 0.1%
LTE FDD	Band 2	-94.3	-100.6	10MHz Bandwidth
	Band 4	-96.3	-101.5	10MHz Bandwidth
	Band 5	-94.3	-103.1	10MHz Bandwidth
	Band 7	-94.3	-99	10MHz Bandwidth
	Band 12	-93.3	-103.2	10MHz Bandwidth
	Band 13	-93.3	-103.1	10MHz Bandwidth
	Band 14	-93.3	-102.4	10MHz Bandwidth
	Band 17	-93.3	-103.5	10MHz Bandwidth
	Band 25	-92.8	-98.5	10MHz Bandwidth
	Band 26	-93.8	-103.0	10MHz Bandwidth
	Band 29	-93.3	-101	10MHz Bandwidth
	Band 30	-95.3	-101	10MHz Bandwidth

Fibocom Confidential

Reproduction forbidden without Fibocom Wireless Inc. written authorization - All Rights Reserved.

Mode	Band	3GPP Requirement (dBm)	Rx Sensitivity (dBm) Typical	Note
	Band 66	-95.8	-101.5	10MHz Bandwidth
	Band 71	-93.5	-101.4	10MHz Bandwidth
LTE TDD	Band 38	-96.3	-100.2	10MHz Bandwidth
	Band 41	-94.3	-99.4	10MHz Bandwidth
	Band 46	-88.5	-95.5	20MHz Bandwidth
	Band 48	-95	-101.3	10MHz Bandwidth

Note:

The above values are measured in dual antennas condition (Main+Diversity). For single main antenna (without Diversity), the sensitivity will drop about 3dBm for each band of LTE.

4.4.2 Four Antennas Receiver Sensitivity

Some middle/high bands support four antennas. The receiver sensitivity for some middle/high bands of L860 module is shown in below table:

Mode	Band	Middle/High Band	3GPP Requirement (dBm)	Rx Sensitivity Typical (dBm)	Note
LTE FDD	Band 2	Middle Band	-97	-103.5	10MHz Bandwidth
	Band 4	Middle Band	-99	-103.5	10MHz Bandwidth
	Band 7	High Band	-97	-103	10MHz Bandwidth
	Band 25	Middle Band	-95.5	-103	10MHz Bandwidth
	Band 30	High Band	-98	-103	10MHz Bandwidth
	Band 66	Middle Band	-98.5	-103.5	10MHz Bandwidth
LTE TDD	Band 41	High Band	-97	-103	10MHz Bandwidth
	Band 48	High Band	-97.2	-103.8	10MHz Bandwidth

Note:

The above values are measured in four antennas condition (Main+Diversity+M1+M2). If only use dual antennas (Main+Diversity), the sensitivity will drop about 3dBm for each band of LTE.

Fibocom Confidential

Reproduction forbidden without Fibocom Wireless Inc. written authorization - All Rights Reserved.

4.5 GNSS

L860 module supports GPS/GLONASS/BDS/Galileo and adopts RF Diversity and GNSS integrated antenna.

Description		Condition	Test Result	
			Max	Typical
Current		GPS fixing	80mA @ -130dBm	65mA @ -130dBm
		GPS tracking	80mA@ -130dBm	65mA@ -130dBm
		GPS+GLONASS+ BDS fixing	80mA @ -130dBm	65mA @ -130dBm
		GPS+GLONASS+ BDS tracking	80mA @ -130dBm	65mA @ -130dBm
		GPS Sleep	3.5mA	2mA
		GPS+GLONASS+ BDS Sleep	3.5mA	2mA
TTFF	GPS	Cold start	45s	35s / -130dBm
		Warm start	45s	33s / -130dBm
		Hot Start	3s	1s / -130dBm
	GPS+GLONASS+BDS	Cold start	45s	35s /-130dBm
		Warm start	45s	33s/-130dBm
		Hot Start	3s	1s/-130dBm
Sensitivity	GPS	Tracking	-156dBm	-158dBm
		Acquisition	-144dBm	-148dBm
	GPS+GLONASS+BDS	Tracking	-156dBm	-158dBm
		Acquisition	-144dBm	-148dBm

Note:
GNSS current is tested with RF disabled at 25°C temperature.

4.6 Antenna Design

The L860 module provides main and diversity antenna interfaces, and the antenna design requirements are shown in the following table:

Fibocom Confidential

Reproduction forbidden without Fibocom Wireless Inc. written authorization - All Rights Reserved.

L860 Module Main Antenna Requirement	
Frequency range	The most proper antenna to adapt the frequencies should be used.
Bandwidth (WCDMA)	WCDMA band 2 (1900): 140 MHz WCDMA band 4 (1700): 445 MHz WCDMA band 5 (850): 70 MHz
Bandwidth (LTE)	LTE band 2 (1900): 140MHz LTE band 4 (1700): 445MHz LTE band 5 (850): 70 MHz LTE band 7 (2600): 190 MHz LTE Band 12 (700): 47 MHz LTE Band 13 (700): 41 MHz LTE Band 14 (700): 40 MHz LTE Band 17 (700): 42 MHz LTE band 25 (1900):145 MHz LTE band 26 (850): 80 MHz LTE band 29 (700): 12 MHz LTE band 30 (2300): 55 MHz LTE band 66 (1700): 490MHz LTE band 38 (2600): 50 MHz LTE band 41 (2500): 194 MHz LTE band 48 (3600):150MHz LTE band 46 (5GHz): 775 MHz
Bandwidth (GNSS)	GPS: 2 MHz GLONASS: 8 MHz BDS: 4 MHz Galileo: 2 MHz
Impedance	50Ω
Input power	> 28 dBm average power WCDMA & LTE
Recommended standing-wave ratio (SWR)	≤ 2:1

Note:

ANT on B30 suggestion: Peak gain < 1dBi, for FCC EIRP requirement, Efficient > 50% for carrier TRP requirement. If integrator doesn't follow the instruction, may cause FCC EIRP or carrier TRP certification fail.

Fibocom Confidential

Reproduction forbidden without Fibocom Wireless Inc. written authorization - All Rights Reserved.

5 ESD Characteristics

The module is generally not protected against Electrostatic Discharge (ESD). ESD handling precautions that apply to ESD sensitive components should be strictly followed. Proper ESD handling procedures must be applied throughout the processing, handling, assembly and operation of any application with module. The ESD characteristics are shown in the following table (Temperature: 25°C, Relative Humidity: 40%).

Interface	Contact Discharge	Air Discharge
GND	±8 kV	±15 kV
Antenna Interface	±8 kV	NA
Golden Finger	±2 kV	NA

Note:

ESD performance is based on EVB-M2 development board.

Fibocom Confidential

Reproduction forbidden without Fibocom Wireless Inc. written authorization - All Rights Reserved.

6 Structure Specification

6.1 Product Appearance

The product appearance for L860 module is shown in Figure6-1:

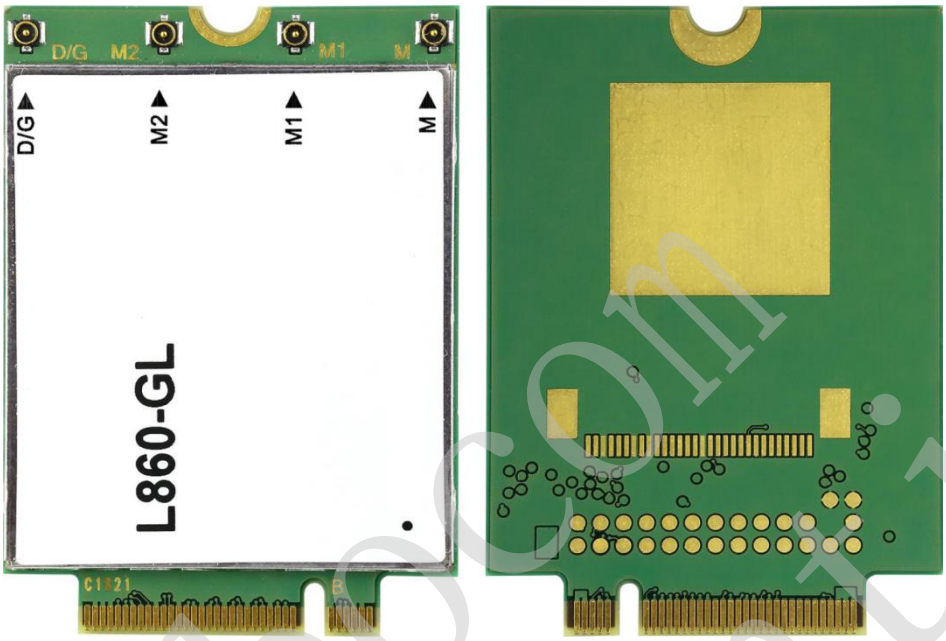

Figure 6-1 Module appearance

Note

The label of each module is subject to the good shipped.

6.2 Dimension of Structure

The structural dimension of the L860 module is shown in Figure 6-2:

Fibocom Confidential

Reproduction forbidden without Fibocom Wireless Inc. written authorization - All Rights Reserved.

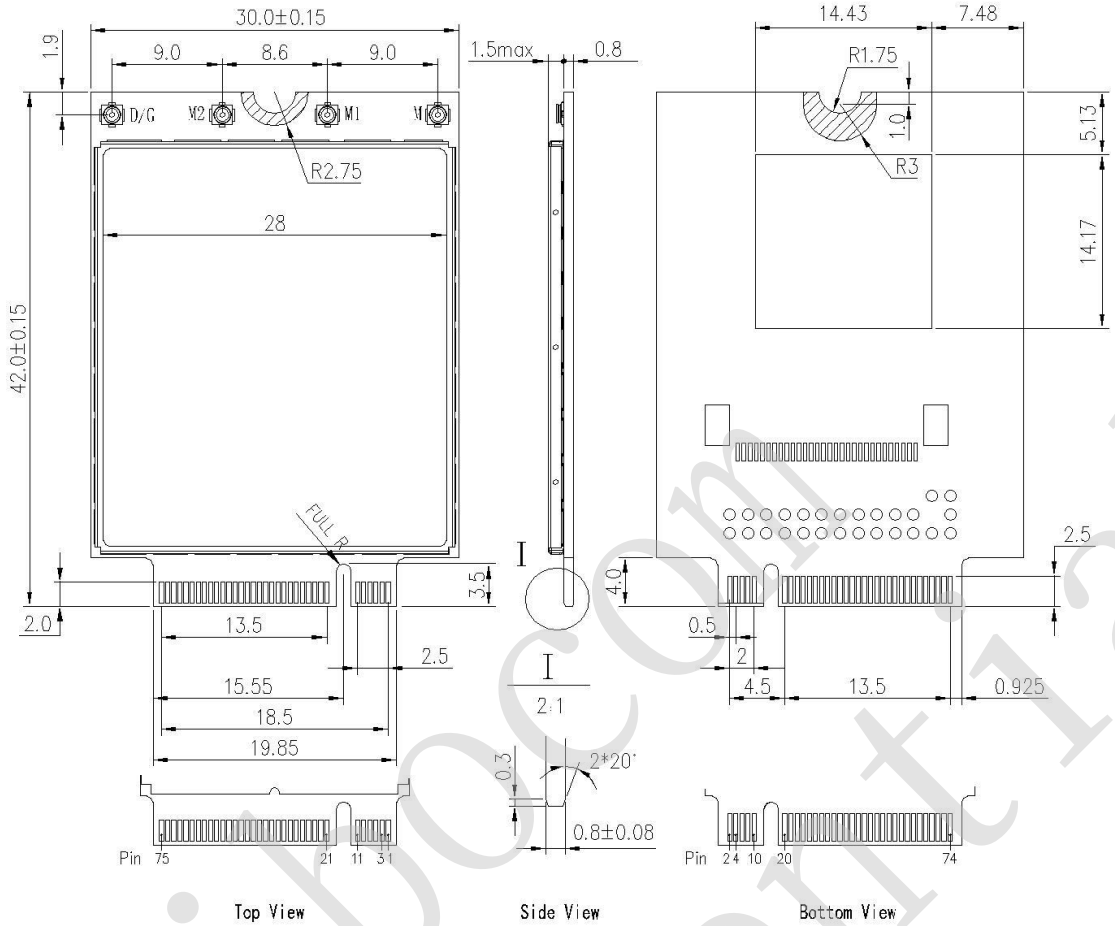

Figure 6-2 Dimension of structure

6.3 M.2 Interface Model

The L860 M.2 module adopts 75-pin gold finger as external interface, where 67 pins are signal pins and 8 pins are notch pins as shown in Figure 3-1. For module dimension, please refer to 6.2 Dimension of Structure. Based on the M.2 interface definition, L860 module adopts Type 3042-S3-B interface (30x42mm, the component maximum height on t top layer is 1.5mm, PCB thickness is 0.8mm, and KEY ID is B).

Fibocom Confidential

Reproduction forbidden without Fibocom Wireless Inc. written authorization - All Rights Reserved.

Module Nomenclature
Sample type 3042-S3-B

Type XX XX - XX - X - X[illegible]

Width (mm)
12
16
22
30

Length (mm)
16
26
30
38
42
60
80
110

	Component Max Ht (mm)	
	Top Max[illegible]	Bottom Max[illegible]
S1	1.2	0****
S2	1.35	0****
S3	1.5	0****
D1	1.2	1.35
D2	1.35	1.35
D3	1.5	1.35
D4	1.5	0.7
D5	1.5	1.5

Key ID	Pin	Interface
A	8-15	2x PCIe x1 / USB 2.0 / I2C / DP x4
B	12-19	PCIe x2/SATA/USB 2.0/USB 3.0/HSIC/SSIC/Audio/UIM/I2C
C	16-23	Reserved for Future Use
D	20-27	Reserved for Future Use
E	24-31	2x PCIe x1 / USB 2.0 / I2C / SDIO / UART / PCM
F	28-35	Future Memory Interface (FMI)
G	39-46	Generic (Not used for M.2)***
H	43-50	Reserved for Future Use
J	47-54	Reserved for Future Use
K	51-58	Reserved for Future Use
L	55-62	Reserved for Future Use
M	59-66	PCIe x4 / SATA

☒ Use ONLY when a double slot is being specified
☒☒ Label included in height dimension
☒☒☒ Key G is intended for custom use. Devices with this key will not be M.2-compliant. Use at your own risk!
☒☒☒☒ Insulating label allowed on connector-based designs

Figure 6-3 M.2 interface model

6.4 M.2 Connector

L860 module connects with host by M.2 connector which is built in host. The recommended part number is APCI0026-P001A manufactured by LOTES Corporation, and the dimension is shown in Figure 6-4. The package of connector, please refer to the specification.

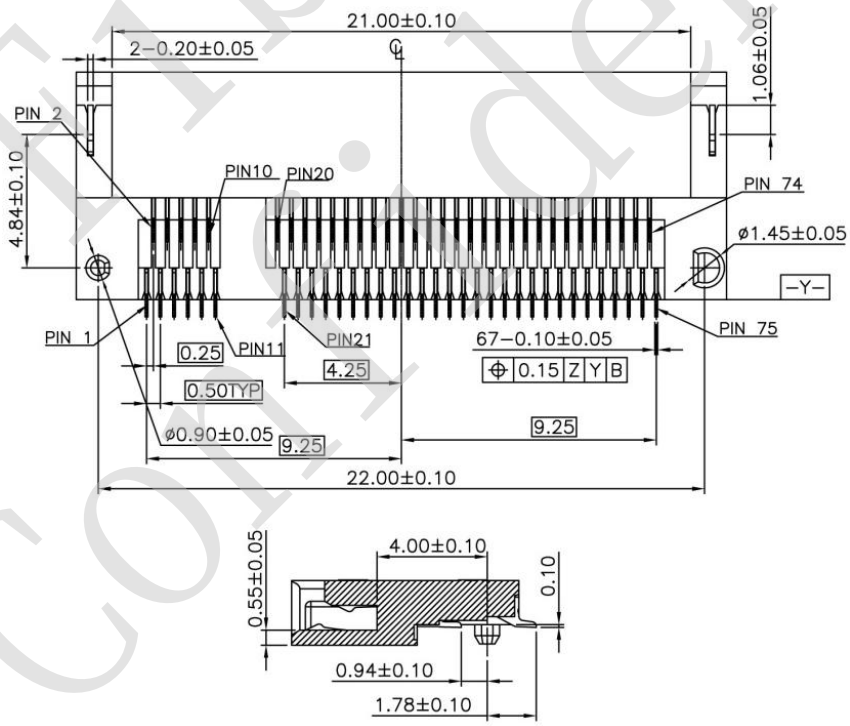

Figure 6-4 M.2 dimension of structure

Fibocom Confidential

Reproduction forbidden without Fibocom Wireless Inc. written authorization - All Rights Reserved.

6.5 Storage

Storage Conditions (recommended): Temperature is 23±5°C, relative humidity is less than RH 60%.
Storage period: Under the recommended storage conditions, the storage life is 12 months.

6.6 Packing

The L860 module uses the tray sealed packing, combined with the outer packing method using the hard cartoon box, so that the storage, transportation and the usage of modules can be protected to the greatest extent.

Note:
The module is a precision electronic product, and may suffer permanent damage if no correct electrostatic protection measures are taken.

6.6.1 Tray Package

The L860 module uses tray package, 20 pcs are packed in each tray, with 5 trays including one empty tray on top in each box and 5 boxes in each case. Tray packaging process is shown in Figure 6-5:

Fibocom Confidential

Reproduction forbidden without Fibocom Wireless Inc. written authorization - All Rights Reserved.

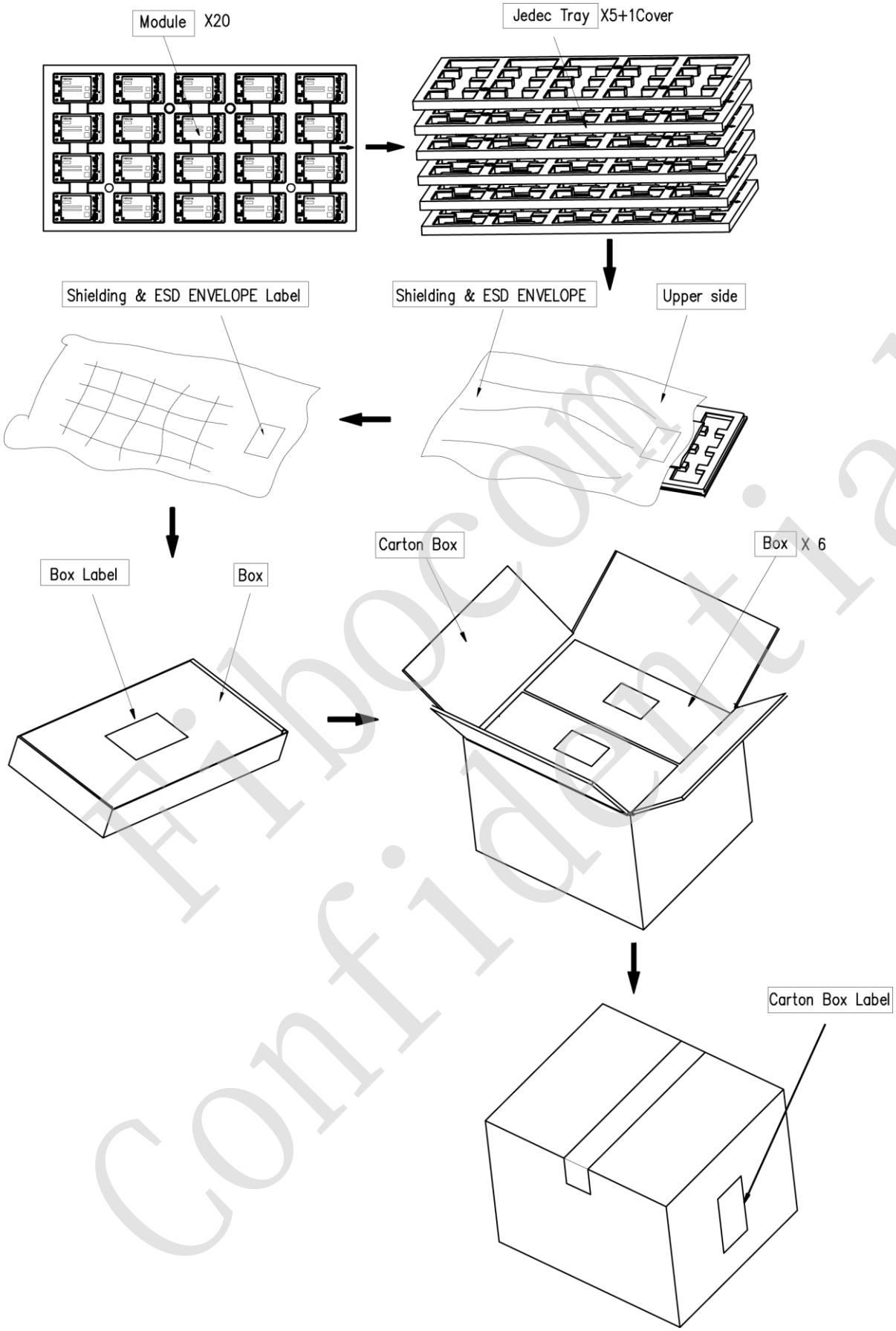

Figure 6-5 Tray packaging process

Fibocom Confidential

Reproduction forbidden without Fibocom Wireless Inc. written authorization - All Rights Reserved.

6.6.2 Tray Size

The pallet size is 315×170×6.5mm, and is shown in Figure 6-6:

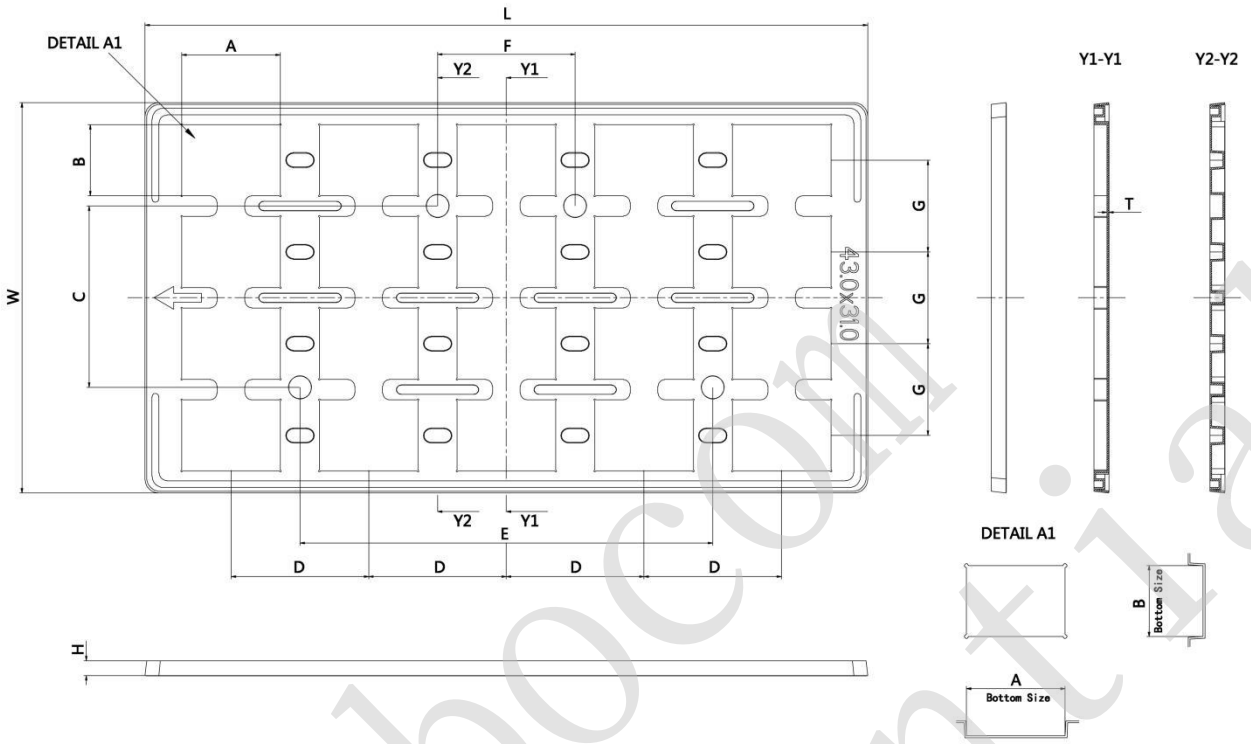

Figure 6-6 Tray size (unit: mm)

ITEM	DIM (Unit: mm)
L	315.0±2.0
W	170.0±2.0
H	6.5±0.3
T	0.8±0.1
A	43.0±0.3
B	31.0±0.3
C	79.0±0.2
D	60.0±0.2
E	180.0±0.2
F	60.0±0.2
G	40.0±0.2

Fibocom Confidential

Reproduction forbidden without Fibocom Wireless Inc. written authorization - All Rights Reserved.