中认信通
CHINA CERTIFICATION ICT CO., LTD (DONGGUAN)

ACCREDITED
TESTING LABORATORY
CERTIFICATE # 6356.01

TEST REPORT

Applicant: **Fibocom Wireless Inc.**

Address: 1101,Tower A, Building 6, Shenzhen International Innovation Valley, Dashi 1st Rd, Nanshan, ShenZhen,China

FCC ID: **ZMOSQ808NA**

Product Name: **LTE Module**

Standard(s): **47 CFR Part 2**
47 CFR Part 22, Subpart H
47 CFR Part 24, Subpart E
47 CFR Part 27
47 CFR Part 90
ANSI C63.26-2015

The above device has been tested and found compliant with the requirement of the relative standards by China Certification ICT Co., Ltd (Dongguan)

Report Number: **CR231167139-00D**

Date Of Issue: **2024/1/15**

Reviewed By: **Calvin Chen**
Title: RF Engineer

Approved By: **Sun Zhong**
Title: Manager

Test Laboratory: **China Certification ICT Co., Ltd (Dongguan)**
No. 113, Pingkang Road, Dalang Town, Dongguan,
Guangdong, China
Tel: +86-769-82016888

Test Facility

The Test site used by China Certification ICT Co., Ltd (Dongguan) to collect test data is located on the No. 113, Pingkang Road, Dalang Town, Dongguan, Guangdong, China.

The lab has been recognized as the FCC accredited lab under the KDB 974614 D01 and is listed in the FCC Public Access Link (PAL) database, FCC Registration No. : 442868, the FCC Designation No. : CN1314.

Declarations

China Certification ICT Co., Ltd (Dongguan) is not responsible for the authenticity of any test data provided by the applicant. Data included from the applicant that may affect test results are marked with a triangle symbol "▲". Customer model name, addresses, names, trademarks etc. are not considered data.

Unless otherwise stated the results shown in this test report refer only to the sample(s) tested.

This report cannot be reproduced except in full, without prior written approval of the Company.

This report is valid only with a valid digital signature. The digital signature may be available only under the Adobe software above version 7.0.

This report may contain data that are not covered by the accreditation scope and shall be marked with an asterisk "★".

CONTENTS

DOCUMENT REVISION HISTORY **5**

1. GENERAL INFORMATION **6**

1.1 PRODUCT DESCRIPTION FOR EQUIPMENT UNDER TEST (EUT) **6**

1.2 DESCRIPTION OF TEST CONFIGURATION **8**

1.2.1 EUT Operation Condition: 8
1.2.2 Support Equipment List and Details 11
1.2.3 Support Cable List and Details 11
1.2.4 Block Diagram of Test Setup 12

1.3 MEASUREMENT UNCERTAINTY **13**

2. SUMMARY OF TEST RESULTS **14**

3. REQUIREMENTS AND TEST PROCEDURES **16**

3.1 APPLICABLE STANDARD FOR PART 22 SUBPART H: **16**

3.1.1 RF Output Power 16
3.1.2 Spurious Emissions 16
3.1.3 Frequency stability 16

3.2 APPLICABLE STANDARD FOR PART 24 SUBPART E: **18**

3.2.1 RF Output Power 18
3.2.2 Spurious Emissions 18
3.2.3 Frequency stability 18

3.3 APPLICABLE STANDARD FOR PART 27: **19**

3.3.1 RF Output Power 19
3.3.2 Spurious Emissions 19
3.3.3 Frequency stability 21

3.4 APPLICABLE STANDARD FOR PART 90: **22**

3.4.1 RF Output Power 22
3.4.2 Spurious Emissions 22
3.4.3 Frequency stability 22

3.5 TEST METHOD: **23**

3.5.1 RF Output Power 23
Test Setup Block: 23
3.5.2 Occupied Bandwidth 24
Test Setup Block: 24
3.5.3 Transmitter unwanted emissions-at antenna terminals 25
Test Setup Block: 25
3.5.4 Out of band emission 26
Test Setup Block: 26
3.5.5 Frequency stability 27
Test Setup Block: 27
3.5.6 Transmitter unwanted emissions- Radiated Spurious emissions 28

4. Test DATA AND RESULTS **30**

4.1 ANTENNA PORT TEST DATA AND RESULTS FOR GSM 850 BAND: **30**

4.2 ANTENNA PORT TEST DATA AND RESULTS FOR GSM 1900 BAND: **32**

4.3 ANTENNA PORT TEST DATA AND RESULTS FOR WCDMA BAND 2: 34
4.4 ANTENNA PORT TEST DATA AND RESULTS FOR WCDMA BAND 4: 36
4.5 ANTENNA PORT TEST DATA AND RESULTS FOR WCDMA BAND 5: 38
4.6ANTENNA PORT TEST DATA AND RESULTS FOR LTE BAND 2 40
4.7 ANTENNA PORT TEST DATA AND RESULTS FOR LTE BAND 4 43
4.8 ANTENNA PORT TEST DATA AND RESULTS FOR LTE BAND 5 46
4.9 ANTENNA PORT TEST DATA AND RESULTS FOR LTE BAND 7 49
4.10 ANTENNA PORT TEST DATA AND RESULTS FOR LTE BAND 12 52
4.11 ANTENNA PORT TEST DATA AND RESULTS FOR LTE BAND 13 55
4.12 ANTENNA PORT TEST DATA AND RESULTS FOR LTE BAND 17 57
4.13 ANTENNA PORT TEST DATA AND RESULTS FOR LTE BAND 25 59
4.14 ANTENNA PORT TEST DATA AND RESULTS FOR LTE BAND 26 62
4.15 ANTENNA PORT TEST DATA AND RESULTS FOR LTE BAND 41 67
4.16 ANTENNA PORT TEST DATA AND RESULTS FOR LTE BAND 66 70
4.17 RADIATED SPURIOUS EMISSIONS 73
5. EUT PHOTOGRAPHS 90
6. TEST SETUP PHOTOGRAPHS 91

DOCUMENT REVISION HISTORY

Revision Number	Report Number	Description of Revision	Date of Revision
1.0	CR231167139-00D	Class II Permissive Change Report	2024/1/15

1. GENERAL INFORMATION

1.1 Product Description for Equipment under Test (EUT)

General:

EUT Name:	LTE Module
EUT Model:	SQ808-NA
Operation Bands and modes:	GPRS/EDGE: 850/1900 WCDMA: Band 2/4/5 LTE: Band 2/4/5/7/12/13/17/25/26/41/66
Modulation Type:	GMSK, 8PSK, BPSK, QPSK, 16QAM, 64QAM
Rated Input Voltage:	5Vdc from Adapter or 7.4Vdc from battery
Serial Number:	2DS1-1 (For RF Conducted Test&Screen 1#) 2DS1-6 (For RE Test&Screen 1#)
EUT Received Date:	2023/11/17
EUT Received Status:	Good
Test Purpose:	
This is Class II permissive Change application for FCC ID: ZMOSQ808NA ,certified on 08/05/2020. The change was below, which was provided by manufacturer▲: 1. Build the module into the certified host, host FCC ID: XKB-DX4CL4GWBT. Per Spot check with the RF output power, the change not affect the RF parameters, so Radiated spurious emission was tested in this report.	

Operation Voltage(V_{DC}) ▲:

Lowest:	6.95	Normal:	7.4	Highest:	8.4

Antenna Information▲:

Antenna	Antenna Manufacturer	Antenna Type	Operation Bands	Antenna Frequency Range(MHz)	Antenna Gain (G_T) (dBi)	L_C (dB)
Main	Fuzhou ZHONGTIANXUN communication technology Co., Ltd	Omni	GSM850	824-849	-1.29	0.2
			PCS1900	1850-1910	2.31	0.2
			WCDMA B2	1850-1910	2.31	0.2
			WCDMA B4	1710-1755	1.7	0.2
			WCDMA B5	824-849	-1.29	0.2
			LTE B2	1850-1910	2.31	0.2
			LTE B4	1710-1755	1.7	0.2
			LTE B5	824-849	-1.29	0.2
			LTE B7	2500-2570	2.87	0.2
			LTE B12	699-716	-1.39	0.2
			LTE B13	777-787	-3.71	0.2
			LTE B17	704-716	-1.39	0.2
			LTE B25	1850-1915	2.31	0.2
			LTE B26	814-824	-2.1	0.2
			LTE B26	824-849	-1.29	0.2
			LTE B41	2496-2690	2.87	0.2
			LTE B66	1710-1785	1.82	0.2
Note: Lc= Signal Attenuation in the connecting cable between the transmitter and antenna, in dB.						

Host Configuration Detail:

Configuration	Item	Manufacturer	Model
1#	Screen	GuangDonghongbosheng Optoelectronic Technology Co.,Ltd.	MDT0500L
2#	Screen	GuangDonghongbosheng Optoelectronic Technology Co.,Ltd.	MDT0500M
3#	Screen	Shenzhen Great Prospect Optoelectronics Co.,Ltd.	MDT0500N

Accessory Information:

Accessory Description	Manufacturer	Model	Parameters
Adapter 1#	Xiamen Keli Electronics Co.,Ltd.	SW-0983	Input: 100-240V~50/60Hz, 0.5A Output: 5.0V, 2.0A
Adapter 2#	Jiangxi Jian Aohai Technology Co.,Ltd.	A319-050200U-US2	Input: 100-240V~50/60Hz,0.3A Output: 5.0V, 2.0A
Adapter 3#	SHENZHEN KEYU POWER SUPPLY TECHNOLOGY CO.,LTD.	KA12C-0502000US	Input: 100-240V~50/60Hz, 0.35A Output: 5.0V, 2000mA

1.2 Description of Test Configuration

1.2.1 EUT Operation Condition:

EUT Operation Mode:	The system was configured for testing in each operation mode. Tests was performed with the Screen 1#+Adapter 1# , because it was the worst which was base on Host test report:CR231167140-00B.
Equipment Modifications:	No
EUT Exercise Software:	No

The maximum power was configured per 3GPP Standard for each operation modes as below setting:

GPRS/EGPRS

Function: Menu select > GSM Mobile Station > GSM 850/1900
Press Connection control to choose the different menus
Press RESET > choose all the reset all settings
Connection Press Signal Off to turn off the signal and change settings
Network Support > GPRS or EGSM
Main Service > Packet Data
Service selection > Test Mode A – Auto Slot Config. off
MS Signal Press Slot Config Bottom on the right twice to select and change the number of time slots and power setting
> Slot configuration > Uplink/Gamma
> 33 dBm for GPRS 850
> 30 dBm for GPRS 1900
> 27 dBm for EGPRS 850
> 26 dBm for EGPRS 1900
BS Signal Enter the same channel number for TCH channel (test channel) and BCCH channel
Frequency Offset > + 0 Hz
Mode > BCCH and TCH

BCCH Level > -85 dBm (May need to adjust if link is not stable)
BCCH Channel > choose desire test channel [Enter the same channel number for TCH channel (test channel) and BCCH channel]

Channel Type > Off
P0 > 4 dB
Slot Config > Unchanged (if already set under MS signal)
TCH > choose desired test channel
Hopping > Off
Main Timeslot > 3
Network Coding Scheme > CS4 (GPRS) and MCS5 (EGPRS)

Bit Stream > 2E9-1 PSR Bit Stream
AF/RF Enter appropriate offsets for Ext. Att. Output and Ext. Att. Input
Connection Press Signal on to turn on the signal and change settings

WCDMA

The following tests were conducted according to the test requirements outlines in section 5.2 of the 3GPP TS34.121-1 specification.

	Mode	**HSUPA**	**HSUPA**	**HSUPA**	**HSUPA**	**HSUPA**
	Subset	**1**	**2**		**4**	**5**
WCDMA General Settings	Loopback Mode	Test Mode 1				
	Rel99 RMC	12.2kbps RMC				
	HSDPA FRC	H-Set1				
	HSUPA Test	HSUPA Loopback				
	Power Control Algorithm	Algorithm2				
	β	11/15	6/15	1 /15	2/15	15/15
	βd	15/15	15/15	9/15	15/15	0
	βec	209/225	12/15	30 15	2/15	5/15
	βc/ βd	11/15	6/15	15/9	2/15	-
	βhs	22/1	2/15	30/15	4/15	5/15
	CM(dB)	1.0	3.	2.0	3.0	1.0
	MPR(dB)	0	2	1	2	0
HSDPA Specific Settings	DACK	8				
	DNAK	8				
	DCQI	8				
	Ack-Nack repetition factor	3				
	CQI Feedback	4ms				
	CQI Repetition Factor	2				
	Ahs=βhs/ βc	30/15				
HSUPA Specific Settings	DE- PCCH		8	8	5	7
	DHARQ	0	0	0	0	0
	A Index	20	12	1	17	21
	ETFCI	75	67	92	71	81
	Associated Max UL Data Rate k ps	242.1	174.9	82.8	205.8	308.9
	Reference E_FCls	E-TFCI 11 E E-TFCI PO 4 E-TFCI 67 E-TFCI PO 18 E-TFCI 71 E-TFCI PO23 E-TFCI 75 E-TFCI PO26 E-TFCI 81 E-TFCI PO 27		E-TFCI 11 E-TFCI PO4 E-TFCI 92 E-TFCI PO 18	E-TFCI 11 E E-TFCI PO 4 E-TFCI 67 E-TFCI PO 18 E-TFCI 71 E-TFCI PO23 E-TFCI 75 E-TFCI PO26 E-TFCI 81 E-TFCI PO 27	

LTE (FDD):

The following tests were conducted according to the test requirements in 3GPP TS36.101

The following tests were conducted according to the test requirements outlined in section 6.2 of the 3GPP TS36.101 specification.

UE Power Class: 3 (23 +/- 2dBm). The allowed Maximum Power Reduction (MPR) for the maximum output power due to higher order modulation and transmit bandwidth configuration (resource blocks) is specified in Table 6.2.3-1 of the 3GPP TS36.101.

Table 6.2.3-1: Maximum Power Reduction (MPR) for Power Class 3

Modulation	Channel bandwidth / Transmission bandwidth (RB)						MPR (dB)
	1.4 MHz	3.0 MHz	5 MHz	10 MHz	15 MHz	20 MHz	
QPSK	> 5	> 4	> 8	> 12	> 16	> 18	≤ 1
16 QAM	≤ 5	≤ 4	≤ 8	≤ 12	≤ 16	≤ 18	≤ 1
16 QAM	> 5	> 4	> 8	> 12	> 16	> 18	≤ 2

The allowed A-MPR values specified below in Table 6.2.4.-1 of 3GPP TS36.101 are in addition to the allowed MPR requirements. All the measurements below were performed with A-MPR disabled, by using Network Signaling Value of "NS_01".

Table 6.2.4-1: Additional Maximum Power Reduction (A-MPR)

Network Signalling value	Requirements (sub-clause)	E-UTRA Band	Channel bandwidth (MHz)	Resources Blocks (N_{RB})	A-MPR (dB)
NS_01	6.6.2.1.1	Table 5.5-1	1.4, 3, 5, 10, 15, 20	Table 5.6-1	NA
NS_03	6.6.2.2.1	2, 4,10, 23, 25, 35, 36	3	>5	≤ 1
			5	>6	≤ 1
			10	>6	≤ 1
			15	>8	≤ 1
			20	>10	≤ 1
NS_04	6.6.2.2.2	41	5	>6	≤ 1
			10, 15, 20	See Table 6.2.4-4	
NS_05	6.6.3.3.1	1	10,15,20	≥ 50	≤ 1
NS_06	6.6.2.2.3	12, 13, 14, 17	1.4, 3, 5, 10	Table 5.6-1	n/a
NS_07	6.6.2.2.3 6.6.3.3.2	13	10	Table 6.2.4-2	Table 6.2.4-2
NS_08	6.6.3.3.3	19	10, 15	> 44	≤ 3
NS_09	6.6.3.3.4	21	10, 15	> 40	≤ 1
				> 55	≤ 2
NS_10		20	15, 20	Table 6.2.4-3	Table 6.2.4-3
NS_11	6.6.2.2.1	23[1]	1.4, 3, 5, 10	Table 6.2.4-5	Table 6.2.4-5
..					
NS_32	-	-	-	-	-
Note 1: Applies to the lower block of Band 23, i.e. a carrier placed in the 2000-2010 MHz region.					

LTE(TDD):

Table 4.2-1: Configuration of special subframe (lengths of DwPTS/GP/UpPTS).

Special subframe configuration	Normal cyclic prefix in downlink			Extended cyclic prefix in downlink		
	DwPTS	UpPTS		DwPTS	UpPTS	
		Normal cyclic prefix in uplink	Extended cyclic prefix in uplink		Normal cyclic prefix in uplink	Extended cyclic prefix in uplink
0	$6592 \cdot T_s$	$2192 \cdot T_s$	$2560 \cdot T_s$	$7680 \cdot T_s$	$2192 \cdot T_s$	$2560 \cdot T_s$
1	$19760 \cdot T_s$			$20480 \cdot T_s$		
2	$21952 \cdot T_s$			$23040 \cdot T_s$		
3	$24144 \cdot T_s$			$25600 \cdot T_s$		
4	$26336 \cdot T_s$			$7680 \cdot T_s$	$4384 \cdot T_s$	$5120 \cdot T_s$
5	$6592 \cdot T_s$	$4384 \cdot T_s$	$5120 \cdot T_s$	$20480 \cdot T_s$		
6	$19760 \cdot T_s$			$23040 \cdot T_s$		
7	$21952 \cdot T_s$			$12800 \cdot T_s$		
8	$24144 \cdot T_s$			-	-	-
9	$13168 \cdot T_s$			-	-	-

Table 4.2-2: Uplink-downlink configurations.

Uplink-downlink configuration	Downlink-to-Uplink Switch-point periodicity	Subframe number									
		0	1	2	3	4	5	6	7	8	9
0	5 ms	D	S	U	U	U	D	S	U	U	U
1	5 ms	D	S	U	U	D	D	S	U	U	D
2	5 ms	D	S	U	D	D	D	S	U	D	D
3	10 ms	D	S	U	U	U	D	D	D	D	D
4	10 ms	D	S	U	U	D	D	D	D	D	D
5	10 ms	D	S	U	D	D	D	D	D	D	D
6	5 ms	D	S	U	U	U	D	S	U	U	D

Calculated Duty Cycle

Uplink-Downlink Configuration	Downlink-to-Uplink Switch-point Periodicity	Subframe Number										Calculated Duty Cycle (%)
		0	1	2	3	4	5	6	7	8	9	
0	5 ms	D	S	U	U	U	D	S	U	U	U	63.33
1	5 ms	D	S	U	U	D	D	S	U	U	D	43.33
2	5 ms	D	S	U	D	D	D	S	U	D	D	23.33
3	10 ms	D	S	U	U	U	D	D	D	D	D	31.67
4	10 ms	D	S	U	U	D	D	D	D	D	D	21.67
5	10 ms	D	S	U	D	D	D	D	D	D	D	11.67
6	5 ms	D	S	U	U	U	D	S	U	U	D	53.33

Calculated Duty Cycle = Extended cyclic prefix in uplink x (T_s) x # of S + # of U

Example for Calculated Duty Cycle for Uplink-Downlink Configuration 0:
Calculated Duty Cycle = 5120 x [1/(15000 x 2048)] x 2 + 6 ms = 63.33%
where
T_s = 1/(15000 x 2048) seconds

1.2.2 Support Equipment List and Details

Manufacturer	Description	Model	Serial Number
R&S	Wideband Radio Communication Tester	CMW500	149218
Unknown	ANTENNA	Unknown	Unknown

1.2.3 Support Cable List and Details

Cable Description	Shielding Type	Ferrite Core	Length (m)	From Port	To
USB Cable	No	No	1.2	Adapter 1#	EUT

1.2.4 Block Diagram of Test Setup

Radiation Test:

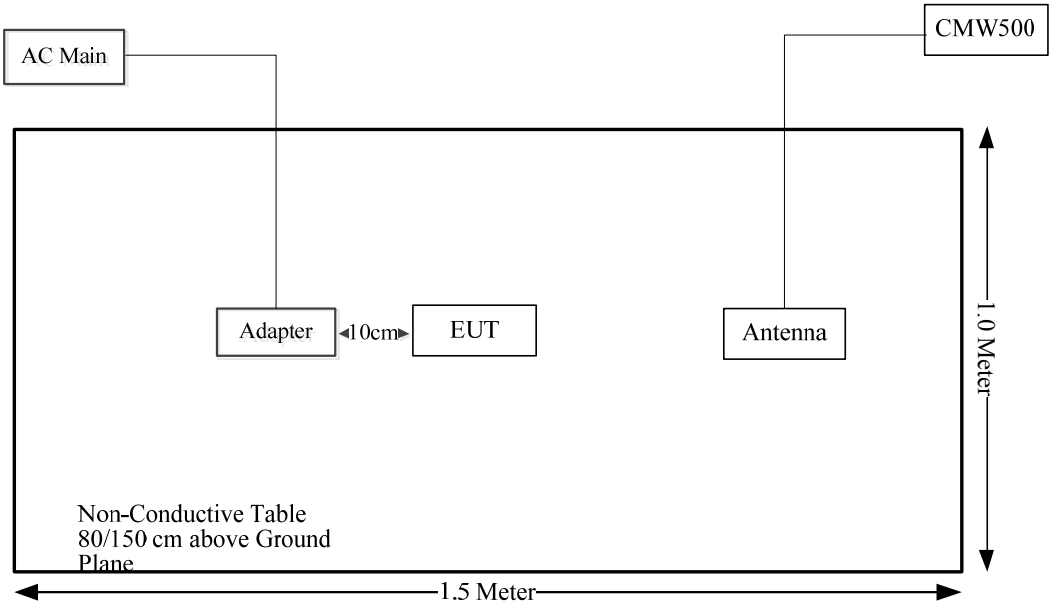

1.3 Measurement Uncertainty

Otherwise required by the applicant or Product Regulations, Decision Rule in this report did not consider the uncertainty. The extended uncertainty given in this report is obtained by combining the standard uncertainty times the coverage factor K with the 95% confidence interval.

Parameter	Measurement Uncertainty
Occupied Channel Bandwidth	±5 %
RF output power, conducted	±0.61dB
Power Spectral Density, conducted	±0.61 dB
Unwanted Emissions, radiated	30M~200MHz: 4.15 dB,200M~1GHz: 5.61 dB,1G~6GHz: 5.14 dB, 6G~18GHz: 5.93 dB,18G~26.5G:5.47 dB,26.5G~40G:5.63 dB
Unwanted Emissions, conducted	±1.26 dB
Temperature	±1℃
Humidity	±5%
DC and low frequency voltages	±0.4%
Duty Cycle	1%
RF Frequency	$\pm 0.082\times 10^{-6}$

2. SUMMARY OF TEST RESULTS

Rules	Description of Test	Result	Note
FCC§2.1046; § 22.913; § 24.232; §27.50 §90.635	RF Output Power	Compliant	Reporting
FCC§ 2.1047	Modulation Characteristics	Not Applicable	/
FCC§ 2.1049; § 22.905 § 22.917; § 24.238; §27.53 §90.209	Occupied Bandwidth	Note*	Original report Appendix B.1 page 23-29/ Appendix B.2 page 17-21/ Appendix B.3 page 17-36/ Appendix B.4 page 17-36/ Appendix B.5 page 15-27/ Appendix B.6 page 15-27/ Appendix B.7 page 15-27/ Appendix B.8 page 9-13/ Appendix B.9 page 13-19/ Appendix B.10 page 18-37/ Appendix B.11 page 12-22/ Appendix B.12 page 16-31/ Appendix B.13 page 15-27/ Appendix B.14 page 17-36
FCC§ 2.1051, § 22.917; § 24.238; §27.53 §90.691	Spurious Emissions at Antenna Terminal	Note*	Original report Appendix B.1 page 34-63 /Appendix B.2 page 62-68/ Appendix B.3 page 17-36/ Appendix B.4 page 62-68/ Appendix B.5 page 45-51/ Appendix B.6 page 46-52/ Appendix B.7 page 45-51/ Appendix B.8 page 22-23/ Appendix B.9 page 29-35/ Appendix B.10 page 63-69/ Appendix B.11 page 24-26/ Appendix B.12 page 53-59/ Appendix B.13 page 45-57/ Appendix B.14 page 62-68
FCC§ 22.917; § 24.238; §27.53 §90.691	Out of band emission, Band Edge	Note*	Original report Appendix B.1 page 30-33/ Appendix B.2 page 37-61/ Appendix B.3 page 17-36/ Appendix B.4 page 37-61/ Appendix B.5 page 28-44/ Appendix B.6 page 28-44/ Appendix B.7 page 28-44/ Appendix B.8 page 14-21/ Appendix B.9 page 20-28/ Appendix B.10 page 38-62/ Appendix B.11 page 23/ Appendix B.12 page 32-52/ Appendix B.13 page 28-44/ Appendix B.14 page 37-61

FCC§ 2.1055 § 22.355; § 24.235; §27.54 §90.213	Frequency stability vs. temperature Frequency stability vs. voltage	Note*	Original report Appendix B.1 page 67-70 /Appendix B.2 page 56-59/ Appendix B.3 page 71-73/ Appendix B.4 page 71-73/ Appendix B.5 page 54-56/ Appendix B.6 page 55-57/ Appendix B.7 page 54-56/ Appendix B.8 page 25-26/ Appendix B.9 page 38-40/ Appendix B.10 page 72-74/ Appendix B.11 page 28/ Appendix B.12 page 62-64/ Appendix B.13 page 60-62/ Appendix B.14 page 71-72
FCC§ 2.1053 § 22.917; § 24.238; §27.53 §90.691	Field Strength of Spurious Radiation	Compliant	/

Note*: per spot check with the output power, the RF parameters identical with the original module, the result please refer to the original report: ZR/2020/6002801, which was released by SGS-CSTC Standards Technical Services Co., Ltd. Shenzhen Branch

China Certification ICT Co., Ltd (Dongguan) is not responsible for the authenticity of any test data provided in the original report.

3. REQUIREMENTS AND TEST PROCEDURES

3.1 Applicable Standard For Part 22 Subpart H:

3.1.1 RF Output Power

FCC §22.913
(a)(5) The ERP of mobile transmitters and auxiliary test transmitters must not exceed 7watts.

(d) *Power measurement.* Measurement of the ERP of Cellular base transmitters and repeaters must be made using an average power measurement technique. The peak-toaverage ratio (PAR) of the transmission must not exceed 13 dB. Power measurements for base transmitters and repeaters must be made in accordance with either of the following:
(1) A Commission-approved average power technique (*see* FCC Laboratory's Knowledge Database); or
(2) For purposes of this section, peak transmit power must be measured over an interval of continuous transmission using instrumentation calibrated in terms of an rmsequivalent voltage. The measurement results shall be properly adjusted for any instrument limitations, such as detector response times, limited resolution bandwidth capability when compared to the emission bandwidth, sensitivity, *etc.,* so as to obtain a true peak measurement for the emission in question over the full bandwidth of the channel.

3.1.2 Spurious Emissions

FCC §22.917

(a) Out of band emissions. The power of any emission outside of the authorized operating frequency ranges must be attenuated below the transmitting power (P) by a factor of at least 43 + 10 log(P) dB.

(b) Measurement procedure. Compliance with these rules is based on the use of measurement instrumentation employing a reference bandwidth as follows:
(1) In the spectrum below 1 GHz, instrumentation should employ a reference bandwidth of 100 kHz or greater. In the 1 MHz bands immediately outside and adjacent to the frequency block, a resolution bandwidth of at least one percent of the emission bandwidth of the fundamental emission of the transmitter may be employed. A narrower resolution bandwidth is permitted in all cases to improve measurement accuracy, provided that the measured power is integrated over the full required reference bandwidth (i.e., 100 kHz or 1 percent of emission bandwidth, as specified). The emission bandwidth is defined as the width of the signal between two points, one below the carrier center frequency and one above the carrier center frequency, outside of which all emissions are attenuated at least 26 dB below the transmitter power.
(2) In the spectrum above 1 GHz, instrumentation should employ a reference bandwidth of 1 MHz

3.1.3 Frequency stability

FCC §22.355

Except as otherwise provided in this part, the carrier frequency of each transmitter in the Public Mobile Services must be maintained within the tolerances given in Table C-1 of this section.

Table C-1 - Frequency Tolerance for Transmitters in the Public Mobile Services

Frequency range (MHz)	**Base, fixed (ppm)**	**Mobile >3 watts (ppm)**	**Mobile ≤3 watts (ppm)**
25 to 50	20	20	50
50 to 450	5	5	50
450 to 512	2.5	5	5
821 to 896	1.5	**2.5**	**2.5**
928 to 929	5	n/a	n/a
929 to 960	1.5	n/a	n/a
2110 to 2220	10	n/a	n/a

3.2 Applicable Standard For Part 24 Subpart E:

3.2.1 RF Output Power

FCC §24.232
(c)Mobile and portable stations are limited to 2 watts EIRP and the equipment must employ a means for limiting power to the minimum necessary for successful communications.

(d)Power measurements for transmissions by stations authorized under this section may be made either in accordance with a Commission-approved average power technique or in compliance with paragraph (e) of this section. In both instances, equipment employed must be authorized in accordance with the provisions of § 24.51. In measuring transmissions in this band using an average power technique, the peak-to-average ratio (PAR) of the transmission may not exceed 13 dB.

3.2.2 Spurious Emissions

FCC §24.238

The rules in this section govern the spectral characteristics of emissions in the Broadband Personal Communications Service.

(a) Out of band emissions. The power of any emission outside of the authorized operating frequency ranges must be attenuated below the transmitting power (P) by a factor of at least 43 + 10 log(P) dB.

(b) Measurement procedure. Compliance with these rules is based on the use of measurement instrumentation employing a resolution bandwidth of 1 MHz or greater. However, in the 1 MHz bands immediately outside and adjacent to the frequency block a resolution bandwidth of at least one percent of the emission bandwidth of the fundamental emission of the transmitter may be employed. A narrower resolution bandwidth is permitted in all cases to improve measurement accuracy provided the measured power is integrated over the full required measurement bandwidth (i.e. 1 MHz or 1 percent of emission bandwidth, as specified). The emission bandwidth is defined as the width of the signal between two points, one below the carrier center frequency and one above the carrier center frequency, outside of which all emissions are attenuated at least 26 dB below the transmitter power.

(c) Alternative out of band emission limit. Licensees in this service may establish an alternative out of band emission limit to be used at specified band edge(s) in specified geographical areas, in lieu of that set forth in this section, pursuant to a private contractual arrangement of all affected licensees and applicants. In this event, each party to such contract shall maintain a copy of the contract in their station files and disclose it to prospective assignees or transferees and, upon request, to the FCC.

(d) Interference caused by out of band emissions. If any emission from a transmitter operating in this service results in interference to users of another radio service, the FCC may require a greater attenuation of that emission than specified in this section.

3.2.3 Frequency stability

FCC §24.235

The frequency stability shall be sufficient to ensure that the fundamental emission stays within the authorized frequency block.

3.3 Applicable Standard For Part 27:

3.3.1 RF Output Power

FCC §27.50

(a)(3) *Mobile and portable stations.*
(i) For mobile and portable stations transmitting in the 2305-2315 MHz band or the 2350-2360 MHz band, the average EIRP must not exceed 50 milliwatts within any 1 megahertz of authorized bandwidth, *except that* for mobile and portable stations compliant with 3GPP LTE standards or another advanced mobile broadband protocol that avoids concentrating energy at the edge of the operating band the average EIRP must not exceed 250 milliwatts within any 5 megahertz of authorized bandwidth but may exceed 50 milliwatts within any 1 megahertz of authorized bandwidth. For mobile and portable stations using time division duplexing (TDD) technology, the duty cycle must not exceed 38 percent in the 2305-2315 MHz and 2350-2360 MHz bands. Mobile and portable stations using FDD technology are restricted to transmitting in the 2305-2315 MHz band. Power averaging shall not include intervals in which the transmitter is off.
(ii) Mobile and portable stations are not permitted to transmit in the 2315-2320 MHz and 2345-2350 MHz bands.
(iii) *Automatic transmit power control.* Mobile and portable stations transmitting in the 2305-2315 MHz band or in the 2350-2360 MHz band must employ automatic transmit power control when operating so the stations operate with the minimum power necessary for successful communications.
(iv) *Prohibition on external vehicle-mounted antennas.* The use of external vehicle-mounted antennas for mobile and portable stations transmitting in the 2305-2315 MHz band or the 2350-2360 MHz band is prohibited.

(b)(10) Portable stations (hand-held devices) transmitting in the 746-757 MHz, 776-788 MHz, and 805-806 MHz bands are limited to 3 watts ERP.

(c)(10) Portable stations (hand-held devices) in the 600 MHz uplink band and the 698-746 MHz band, and fixed and mobile stations in the 600 MHz uplink band are limited to 3 watts ERP.

(d)(4) Fixed, mobile, and portable (hand-held) stations operating in the 1710-1755 MHz band and mobile and portable stations operating in the 1695-1710 MHz and 1755-1780 MHz bands are limited to 1 watt EIRP. Fixed stations operating in the 1710-1755 MHz band are limited to a maximum antenna height of 10 meters above ground. Mobile and portable stations operating in these bands must employ a means for limiting power to the minimum necessary for successful communications.

(h) The following power limits shall apply in the BRS and EBS:
(2)Mobile and other user stations. Mobile stations are limited to 2.0 watts EIRP. All user stations are limited to 2.0 watts transmitter output power.

3.3.2 Spurious Emissions

FCC §27.53

(a) For operations in the 2305-2320 MHz band and the 2345-2360 MHz band, the power of any emission outside a licensee's frequency band(s) of operation shall be attenuated below the transmitter power P (with averaging performed only during periods of transmission) within the licensed band(s) of operation, in watts, by the following amounts:
(4)For mobile and portable stations operating in the 2305-2315 MHz and 2350-2360 MHz bands:

(i) By a factor of not less than: 43 + 10 log (P) dB on all frequencies between 2305 and 2320 MHz and on all frequencies between 2345 and 2360 MHz that are outside the licensed band(s) of operation, not less than 55 + 10 log (P) dB on all frequencies between 2320 and 2324 MHz and on all frequencies between 2341 and 2345 MHz, not less than 61 + 10 log (P) dB on all frequencies between 2324 and 2328 MHz and on all frequencies between 2337 and 2341 MHz, and not less than 67 + 10 log (P) dB on all frequencies between 2328 and 2337 MHz;

(ii) By a factor of not less than 43 + 10 log (P) dB on all frequencies between 2300 and 2305 MHz, 55 + 10 log (P) dB on all frequencies between 2296 and 2300 MHz, 61 + 10 log (P) dB on all frequencies between 2292 and 2296 MHz, 67 + 10 log (P) dB on all frequencies between 2288 and 2292 MHz, and 70 + 10 log (P) dB below 2288 MHz;

(iii) By a factor of not less than 43 + 10 log (P) dB on all frequencies between 2360 and 2365 MHz, and not less than 70 + 10 log (P) dB above 2365 MHz.

(c)For operations in the 746-758 MHz band and the 776-788 MHz band, the power of any emission outside the licensee's frequency band(s) of operation shall be attenuated below the transmitter power (P) within the licensed band(s) of operation, measured in watts, in accordance with the following:

(1) On any frequency outside the 746-758 MHz band, the power of any emission shall be attenuated outside the band below the transmitter power (P) by at least 43 + 10 log (P) dB;

(2) On any frequency outside the 776-788 MHz band, the power of any emission shall be attenuated outside the band below the transmitter power (P) by at least 43 + 10 log (P) dB;

(3) On all frequencies between 763-775 MHz and 793-805 MHz, by a factor not less than 76 + 10 log (P) dB in a 6.25 kHz band segment, for base and fixed stations;

(4) On all frequencies between 763-775 MHz and 793-805 MHz, by a factor not less than 65 + 10 log (P) dB in a 6.25 kHz band segment, for mobile and portable stations;

(5) Compliance with the provisions of paragraphs (c)(1) and (c)(2) of this section is based on the use of measurement instrumentation employing a resolution bandwidth of 100 kHz or greater. However, in the 100 kHz bands immediately outside and adjacent to the frequency block, a resolution bandwidth of at least 30 kHz may be employed;

(6) Compliance with the provisions of paragraphs (c)(3) and (c)(4) of this section is based on the use of measurement instrumentation such that the reading taken with any resolution bandwidth setting should be adjusted to indicate spectral energy in a 6.25 kHz segment.

(f) For operations in the 746-758 MHz, 775-788 MHz, and 805-806 MHz bands, emissions in the band 1559-1610 MHz shall be limited to – 70 dBW/MHz equivalent isotropically radiated power (EIRP) for wideband signals, and – 80 dBW EIRP for discrete emissions of less than 700 Hz bandwidth. For the purpose of equipment authorization, a transmitter shall be tested with an antenna that is representative of the type that will be used with the equipment in normal operation.

(g) For operations in the 600 MHz band and the 698-746 MHz band, the power of any emission outside a licensee's frequency band(s) of operation shall be attenuated below the transmitter power (P) within the licensed band(s) of operation, measured in watts, by at least 43 + 10 log (P) dB. Compliance with this provision is based on the use of measurement instrumentation employing a resolution bandwidth of 100 kilohertz or greater. However, in the 100 kilohertz bands immediately outside and adjacent to a licensee's frequency block, a resolution bandwidth of at least 30 kHz may be employed.

(h) AWS emission limits

(1) ***General protection levels.*** Except as otherwise specified below, for operations in the 1695-1710 MHz, 1710-1755 MHz, 1755-1780 MHz, 1915-1920 MHz, 1995-2000 MHz, 2000-2020 MHz, 2110-2155 MHz, 2155-2180 MHz, and 2180-2200 bands, the power of any emission outside a licensee's frequency block shall be attenuated below the transmitter power (P) in watts by at least 43 + 10 $\log_{10}$ (P) dB.

(m)(4) For mobile digital stations, the attenuation factor shall be not less than 40 + 10 log (P) dB on all frequencies between the channel edge and 5 megahertz from the channel edge, 43 + 10 log (P) dB on all frequencies between 5 megahertz and X megahertz from the channel edge, and 55 + 10 log (P) dB on all frequencies more than X megahertz from the channel edge, where X is the greater of 6 megahertz or the actual emission bandwidth as defined in paragraph (m)(6) of this section. In addition, the attenuation factor shall not be less that 43 + 10 log (P) dB on all frequencies between 2490.5 MHz and 2496 MHz and 55 + 10 log (P) dB at or below 2490.5 MHz. Mobile Satellite Service licensees operating on frequencies below 2495 MHz may also submit a documented interference complaint against BRS licensees operating on channel BRS Channel 1 on the same terms and conditions as adjacent channel BRS or EBS licensees.

3.3.3 Frequency stability

FCC §27.54

The frequency stability shall be sufficient to ensure that the fundamental emissions stay within the authorized bands of operation.

3.4 Applicable Standard For Part 90:

3.4.1 RF Output Power

FCC §90.635

(b) The maximum output power of the transmitter for mobile stations is 100 watts (20 dBw).

3.4.2 Spurious Emissions

FCC §90.691

(a) Out-of-band emission requirement shall apply only to the “outer” channels included in an EA license and to spectrum adjacent to interior channels used by incumbent licensees. The emission limits are as follows:
(1) For any frequency removed from the EA licensee's frequency block by up to and including 37.5 kHz, the power of any emission shall be attenuated below the transmitter power (P) in watts by at least 116 Log10(f/6.1) decibels or 50 + 10 Log10(P) decibels or 80 decibels, whichever is the lesser attenuation, where f is the frequency removed from the center of the outer channel in the block in kilohertz and where f is greater than 12.5 kHz.
(2) For any frequency removed from the EA licensee's frequency block greater than 37.5 kHz, the power of any emission shall be attenuated below the transmitter power (P) in watts by at least 43 + 10Log10(P) decibels or 80 decibels, whichever is the lesser attenuation, where f is the frequency removed from the center of the outer channel in the block in kilohertz and where f is greater than 37.5 kHz.
(b) When an emission outside of the authorized bandwidth causes harmful interference, the Commission may, at its discretion, require greater attenuation than specified in this section.

3.4.3 Frequency stability

FCC §90.213

809-824 MHz band, 2.5ppm for 2W or less output power.

3.5 Test Method:

3.5.1 RF Output Power

According to CFR Part 2.1046, ANSI C63.26-2015 Section 5.2.5.5:

The relevant equation for determining the ERP or EIRP from the conducted RF output power measured using the guidance provided above is:

$$\text{ERP or EIRP} = P_{Meas} + G_T - L_C$$

where:

ERP or EIRP = effective radiated power or equivalent isotropically radiated power, respectively (expressed in the same units as P_{Meas}, typically dBW or dBm);
P_{Meas} = measured transmitter output power or PSD, in dBm or dBW;
G_T = gain of the transmitting antenna, in dBd (ERP) or dBi (EIRP);
L_C = signal attenuation in the connecting cable between the transmitter and antenna, in dB.

Test Setup Block:

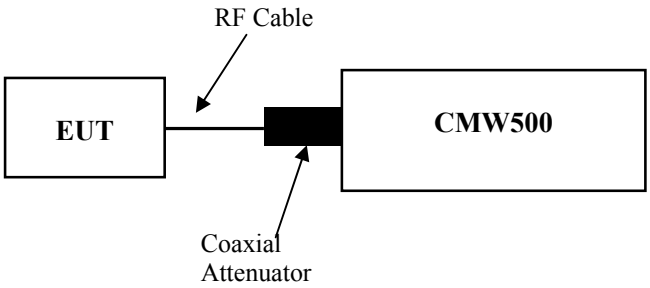

Note: The Insertion loss of the RF cable and coaxial Attenuator was offset into the Reading of CMW500.

3.5.2 Occupied Bandwidth

According to CFR Part 2.1049, ANSI C63.26-2015 Section 5.4.4

The OBW is the frequency bandwidth such that, below its lower and above its upper frequency limits, the mean powers are each equal to 0.5% of the total mean power of the given emission.

The following procedure shall be used for measuring (99%) power bandwidth:

a) The spectrum analyzer center frequency is set to the nominal EUT channel center frequency. The frequency span for the spectrum analyzer shall be set wide enough to capture all modulation products including the emission skirts (typically a span of 1.5 × OBW is sufficient).

b) The nominal IF filter 3 dB bandwidth (RBW) shall be in the range of 1% to 5% of the anticipated OBW, and the VBW shall be set ≥ 3 × RBW.

c) Set the reference level of the instrument as required to prevent the signal amplitude from exceeding the maximum spectrum analyzer input mixer level for linear operation. See guidance provided in 4.2.3. NOTE—Step a), step b), and step c) may require iteration to adjust within the specified tolerances.

d) Set the detection mode to peak, and the trace mode to max-hold.

e) If the instrument does not have a 99% OBW function, recover the trace data points and sum directly in linear power terms. Place the recovered amplitude data points, beginning at the lowest frequency, in a running sum until 0.5% of the total is reached. Record that frequency as the lower OBW frequency. Repeat the process until 99.5% of the total is reached and record that frequency as the upper OBW frequency. The 99% power OBW can be determined by computing the difference these two frequencies.

f) The OBW shall be reported and plot(s) of the measuring instrument display shall be provided with the test report. The frequency and amplitude axis and scale shall be clearly labeled. Tabular data can be reported in addition to the plot(s).

Test Setup Block:

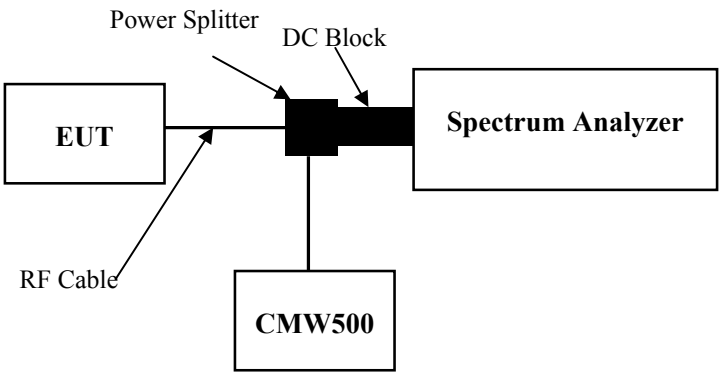

3.5.3 Transmitter unwanted emissions-at antenna terminals

According to ANSI C63.26-2015 Section 5.7.4:

the applicable rule part specifies the reference bandwidth for measuring unwanted emission levels (typically, 100 kHz if the authorized frequency band/block is at or below 1 GHz and 1 MHz if the authorized frequency band/block is above 1 GHz),8 effectively depicting the unwanted emission limit in terms of a power spectral density. In those cases where no reference bandwidth is explicitly specified, the values in the preceding sentence should be used.

Test Setup Block:

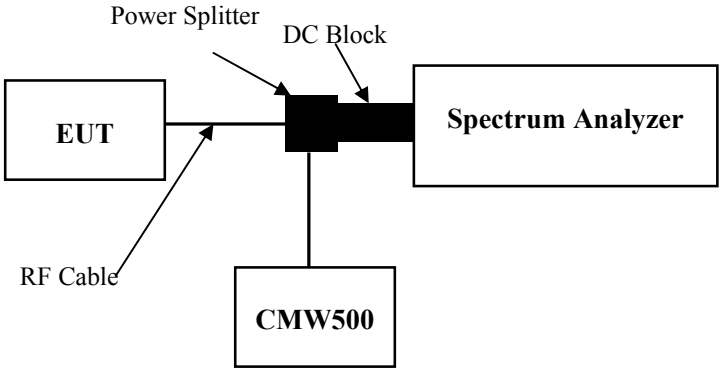

3.5.4 Out of band emission

According to ANSI C63.26-2015 Section 5.7.3:

Typically, a measurement (resolution) bandwidth smaller than the reference bandwidth is allowed for measurements within a specified frequency range at the edge of the authorized frequency block/band (e.g., within the first Y MHz outside of the authorized frequency band/block, where the value of Y is specified in the relevant rule part). Some FCC out-of-band emission rules permit the use of a narrower RBW (typically limited to a minimum RBW of 1 % of the OBW) for measuring the out-of-band emissions without a requirement to integrate the result over the full reference bandwidth. Beyond the specified frequency range in which this relaxation of the uniform reference bandwidth is permitted, it typically is also acceptable to use a narrower RBW (again limited to a minimum of 1 % of OBW) to increase accuracy, but the measurement result must subsequently be integrated over the full reference bandwidth.

Test Setup Block:

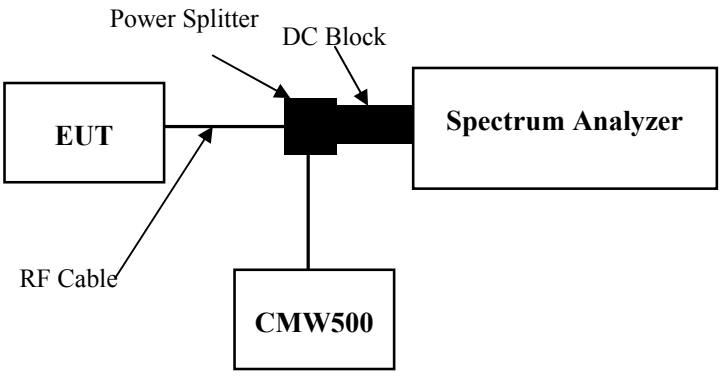

3.5.5 Frequency stability

According to ANSI C63.26-2015 Section 5.6:

Frequency stability is a measure of the frequency drift due to temperature and supply voltage variations, with reference to the frequency measured at +20 °C and rated supply voltage.

The operating carrier frequency shall be set up in accordance with the manufacturer's published operation and instruction manual prior to the commencement of these tests. No adjustment of any frequency determining circuit element shall be made subsequent to this initial set-up. Frequency stability is tested:

a) At 10 °C intervals of temperatures between −30 °C and +50 °C at the manufacturer's rated supply voltage, and

b) At +20 °C temperature and ±15% supply voltage variations. If a product is specified to operate over a range of input voltage then the −15% variation is applied to the lowermost voltage and the +15% is applied to the uppermost voltage.

During the test all necessary settings, adjustments and control of the EUT have to be performed without disturbing the test environment, i.e., without opening the environmental chamber. The frequency stabilities can be maintained to a lesser temperature range provided that the transmitter is automatically inhibited from operating outside the lesser temperature range. For handheld equipment that is only capable of operating from internal batteries and the supply voltage cannot be varied, the frequency stability tests shall be performed at the nominal battery voltage and the battery end point voltage specified by the manufacturer. An external supply voltage can be used and set at the internal battery nominal voltage, and again at the battery operating end point voltage which shall be specified by the equipment manufacturer.

If an unmodulated carrier is not available, the mean frequency of a modulated carrier can be obtained by using a frequency counter with gating time set to an appropriately large multiple of bit periods (gating time depending on the required accuracy). Full details on the choice of values shall be included in the test report.

Test Setup Block:

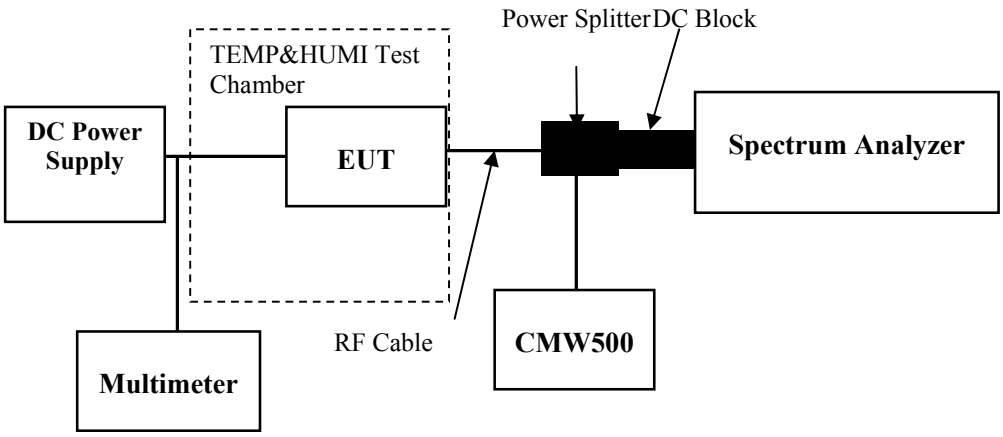

3.5.6 Transmitter unwanted emissions- Radiated Spurious emissions

According to ANSI C63.26-2015 Section 5.5.3:

Test setup:

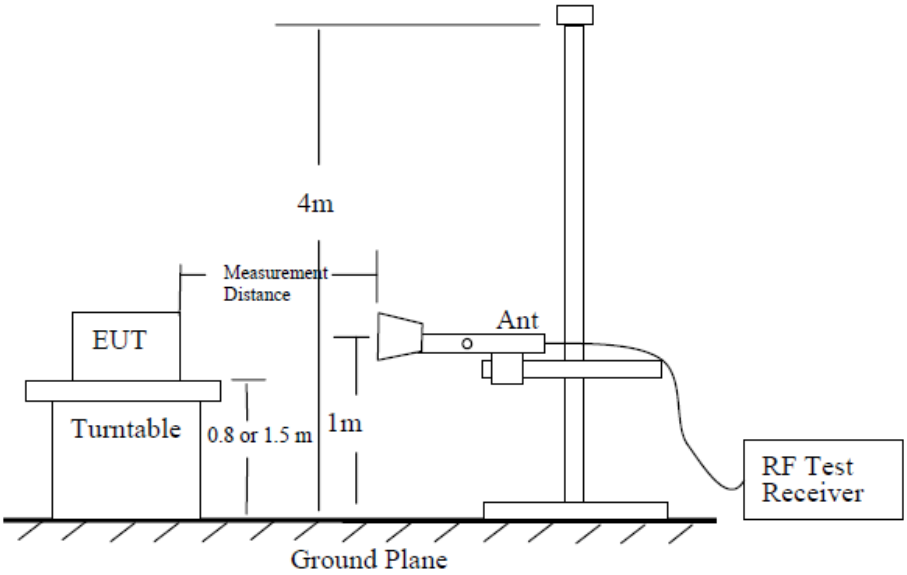

Figure 6 —Test site-up for radiated ERP and/or EIRP measurements

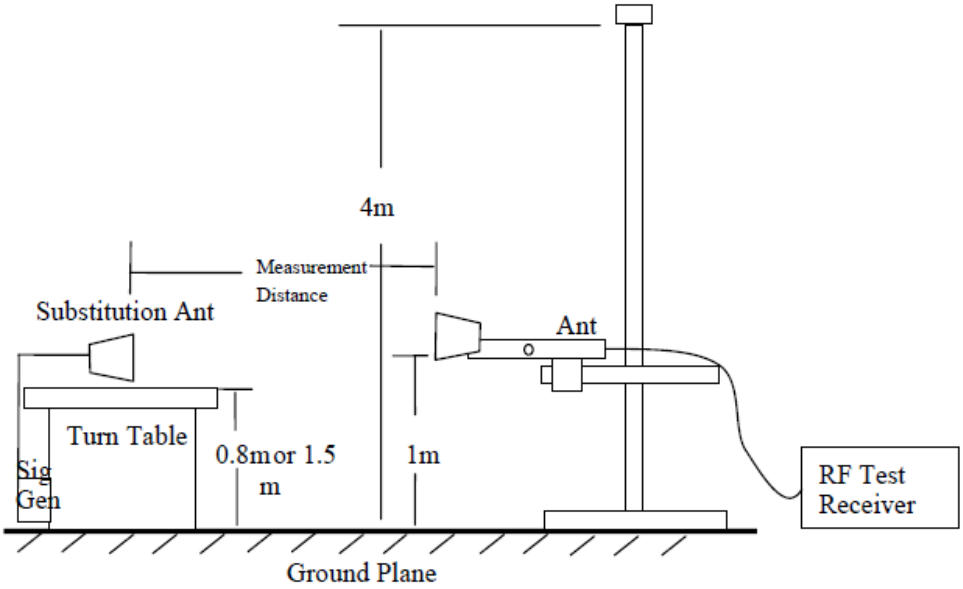

Figure 7 —Substitution method set-up for radiated emission

Test Procedure:

a) Place the EUT in the center of the turntable. The EUT shall be configured to transmit into the standard non-radiating load (for measuring radiated spurious emissions), connected with cables of minimal length unless specified otherwise. If the EUT uses an adjustable antenna, the antenna shall be positioned to the length that produces the worst case emission at the fundamental operating frequency.

b) Each emission under consideration shall be evaluated:

1) Raise and lower the measurement antenna in accordance 5.5.2, as necessary to enable detection of the maximum emission amplitude relative to measurement antenna height.

2) Rotate the EUT through 360° to determine the maximum emission level relative to the axial position.

3) Return the turntable to the azimuth where the highest emission amplitude level was observed.

4) Vary the measurement antenna height again through 1 m to 4 m again to find the height associated with the maximum emission amplitude.

5) Record the measured emission amplitude level and frequency using the appropriate RBW.

c) Repeat step b) for each emission frequency with the measurement antenna oriented in both the horizontal and vertical polarizations to determine the orientation that gives the maximum emissions amplitude.

d) Set-up the substitution measurement with the reference point of the substitution antenna located as near as possible to where the center of the EUT radiating element was located during the initial EUT measurement.

e) Maintain the previous measurement instrument settings and test set-up, with the exception that the EUT is removed and replaced by the substitution antenna.

f) Connect a signal generator to the substitution antenna; locate the signal generator so as to minimize any potential influences on the measurement results. Set the signal generator to the frequency where emissions are detected, and set an output power level such that the radiated signal can be detected by the measurement instrument, with sufficient dynamic range relative to the noise floor.

g) For each emission that was detected and measured in the initial test [i.e., in step b) and step c)]:

1) Vary the measurement antenna height between 1 m to 4 m to maximize the received (measured) signal amplitude.

2) Adjust the signal generator output power level until the amplitude detected by the measurement instrument equals the amplitude level of the emission previously measured directly in step b) and step c).

3) Record the output power level of the signal generator when equivalence is achieved in step 2).

h) Repeat step e) through step g) with the measurement antenna oriented in the opposite polarization.

i) Calculate the emission power in dBm referenced to a half-wave dipole using the following equation:

$$Pe = Ps(dBm) - \text{cable loss (dB)} + \text{antenna gain (dBd)}$$

where

Pe = equivalent emission power in dBm
Ps = source (signal generator) power in dBm

NOTE—dBd refers to the measured antenna gain in decibels relative to a half-wave dipole.

j) Correct the antenna gain of the substitution antenna if necessary to reference the emission power to a half-wave dipole. When using measurement antennas with the gain specified in dBi, the equivalent dipole-referenced gain can be determined from: gain (dBd) = gain (dBi) − 2.15 dB. If necessary, the antenna gain can be calculated from calibrated antenna factor information

k) Provide the complete measurement results as a part of the test report.

4. Test DATA AND RESULTS

4.1 Antenna Port Test Data and Results for GSM 850 band:

Serial Number:	2DS1-1	Test Date:	2023/11/30~2023/12/1
Test Site:	RF	Test Mode:	Transmitting
Tester:	One Luo	Test Result:	**Pass**

Environmental Conditions:					
Temperature: (℃)	25.2~25.9	Relative Humidity: (%)	39~42	ATM Pressure: (kPa)	101.2~101.3

Test Equipment List and Details:

Manufacturer	Description	Model	Serial Number	Calibration Date	Calibration Due Date
zhuoxiang	Coaxial Cable	SMA-178	211001	Each time	N/A
YINSAIGE	Coaxial Cable	SS402	SJ0100001	Each time	N/A
Mini-Circuits	DC Block	BLK-18-S+	6155/10/22	Each time	N/A
R&S	Wideband Radio Communication Tester	CMW500	2292/10/8	2023/3/31	2024/3/30

** Statement of Traceability: China Certification ICT Co., Ltd (Dongguan) attests that all calibrations have been performed, traceable to National Primary Standards and International System of Units (SI).*

EUT Information@ GSM 850 Band▲:					
Antenna Gain (dBi):	-1.29	Antenna Gain (dBd):	-3.44	Cable Loss (dB):	0.2
Operation Voltage(V_{DC}):					
Lowest:	6.95	Normal:	7.4	Highest:	8.4

Test Frequency For Each Mode:

Operation Modes	Lowest Frequency (MHz)	Middle Frequency (MHz)	Highest Frequency (MHz)
GPRS	824.2	836.6	848.8
EDGE	824.2	836.6	848.8

Test Data:

FCC§2.1046;§ 22.913 (a):RF Output Power					
Test Mode	Conducted Peak Output Power(dBm)			Maximum ERP (dBm)	ERP Limit (dBm)
	Lowest Channel	Middle Channel	Highest Channel		
GPRS 1 Slot	31.36	31.62	31.53	27.98	38.45
GPRS 2 Slots	29.37	29.68	29.57	26.04	38.45
GPRS 3 Slots	27.36	27.6	27.58	23.96	38.45
GPRS 4 Slots	25.39	25.53	25.54	21.9	38.45
EDGE 1 Slot	27.41	27.53	27.33	23.89	38.45
EDGE 2 Slots	25.45	25.57	25.28	21.93	38.45
EDGE 3 Slots	23.39	23.5	23.22	19.86	38.45
EDGE 4 Slots	21.34	21.43	21.31	17.79	38.45
Note: ERP=Conducted Power(dBm) - Cable loss(dB) + Antenna Gain(dBd)					

4.2 Antenna Port Test Data and Results for GSM 1900 band:

Serial Number:	2DS1-1	Test Date:	2023/11/30~2023/12/1
Test Site:	RF	Test Mode:	Transmitting
Tester:	One Luo	Test Result:	**Pass**

Environmental Conditions:					
Temperature: (℃)	25.2~25.9	Relative Humidity: (%)	39~42	ATM Pressure: (kPa)	101.2~101.3

Test Equipment List and Details:

Manufacturer	Description	Model	Serial Number	Calibration Date	Calibration Due Date
zhuoxiang	Coaxial Cable	SMA-178	211001	Each time	N/A
YINSAIGE	Coaxial Cable	SS402	SJ0100001	Each time	N/A
Mini-Circuits	DC Block	BLK-18-S+	1554403	Each time	N/A
R&S	Wideband Radio Communication Tester	CMW500	143458	2023-03-31	2024-03-30

** Statement of Traceability: China Certification ICT Co., Ltd (Dongguan) attests that all calibrations have been performed, traceable to National Primary Standards and International System of Units (SI).*

Test Frequency For Each Mode:

Operation Modes	Lowest Frequency (MHz)	Middle Frequency (MHz)	Highest Frequency (MHz)
GPRS	1850.2	1880	1909.8
EDGE	1850.2	1880	1909.8

Test Data:

FCC§2.1046;§ 24.232 (c):RF Output Power					
Test Mode	Conducted Peak Output Power(dBm)			Maximum EIRP (dBm)	EIRP Limit (dBm)
	Lowest Channel	Middle Channel	Highest Channel		
GPRS 1 Slot	29.21	29.41	29.38	31.52	33
GPRS 2 Slots	27.29	27.35	27.47	29.58	33
GPRS 3 Slots	25.32	25.26	25.49	27.6	33
GPRS 4 Slots	23.26	23.23	23.45	25.56	33
EDGE 1 Slot	27.28	27.62	27.24	29.73	33
EDGE 2 Slots	25.38	25.63	25.24	27.74	33
EDGE 3 Slots	23.38	23.67	23.24	25.78	33
EDGE 4 Slots	21.39	21.75	21.18	23.86	33
Note: EIRP=Conducted Power(dBm) - Cable loss(dB) + Antenna Gain(dBi)					
				Result:	**Pass**

4.3 Antenna Port Test Data and Results for WCDMA Band 2:

Serial Number:	2DS1-1	Test Date:	2023/11/30~2023/12/1
Test Site:	RF	Test Mode:	Transmitting
Tester:	One Luo	Test Result:	**Pass**

Environmental Conditions:					
Temperature: (℃)	25.2~25.9	Relative Humidity: (%)	39~42	ATM Pressure: (kPa)	101.2~101.3

Test Equipment List and Details:

Manufacturer	Description	Model	Serial Number	Calibration Date	Calibration Due Date
zhuoxiang	Coaxial Cable	SMA-178	211001	Each time	N/A
YINSAIGE	Coaxial Cable	SS402	SJ0100001	Each time	N/A
Mini-Circuits	DC Block	BLK-18-S+	1554403	Each time	N/A
R&S	Wideband Radio Communication Tester	CMW500	143458	2023-03-31	2024-03-30

** Statement of Traceability: China Certification ICT Co., Ltd (Dongguan) attests that all calibrations have been performed, traceable to National Primary Standards and International System of Units (SI).*

Test Frequency For Each Mode:

Operation Modes	Lowest Frequency (MHz)	Middle Frequency (MHz)	Highest Frequency (MHz)
WCDMA	1852.4	1880	1907.6

Test Data:

FCC§2.1046;§ 24.232 (c)
RF Output Power:

Test Mode	Conducted Average Output Power(dBm)			Maximum EIRP(dBm)	EIRP Limit(dBm)
	Lowest Channel	Middle Channel	Highest Channel		
WCDMA R99	23.79	24.04	24.01	26.15	33
HSDPA Subtest 1	23.62	23.84	24.21	26.32	33
HSDPA Subtest 2	23.45	23.65	23.71	25.82	33
HSDPA Subtest 3	23.41	23.65	23.66	25.77	33
HSDPA Subtest 4	23.32	23.79	23.37	25.9	33
HSUPA Subtest 1	23.21	23.3	23.71	25.82	33
HSUPA Subtest 2	23.07	23.46	23.47	25.58	33
HSUPA Subtest 3	23.02	23.54	23.6	25.71	33
HSUPA Subtest 4	22.82	23.31	23.41	25.52	33
HSUPA Subtest 5	22.65	22.68	23.25	25.36	33
DC-HSDPA Subtest 1	22.48	22.71	22.97	25.08	33
DC-HSDPA Subtest 2	22.43	22.38	22.74	24.85	33
DC-HSDPA Subtest 3	22.37	22.8	22.61	24.91	33
DC-HSDPA Subtest 4	22.24	22.3	22.35	24.46	33
HSPA+ Subtest 1	22.08	22.42	22.16	24.53	33
Note: EIRP=Conducted Power(dBm) - Cable loss(dB) + Antenna Gain(dBi)					
				Result:	**Pass**

4.4 Antenna Port Test Data and Results for WCDMA Band 4:

Serial Number:	2DS1-1	Test Date:	2023/11/30~2023/12/1
Test Site:	RF	Test Mode:	Transmitting
Tester:	One Luo	Test Result:	**Pass**

Environmental Conditions:					
Temperature: (℃)	25.2~25.9	Relative Humidity: (%)	39~42	ATM Pressure: (kPa)	101.2~101.3

Test Equipment List and Details:

Manufacturer	Description	Model	Serial Number	Calibration Date	Calibration Due Date
zhuoxiang	Coaxial Cable	SMA-178	211001	Each time	N/A
YINSAIGE	Coaxial Cable	SS402	SJ0100001	Each time	N/A
Mini-Circuits	DC Block	BLK-18-S+	1554403	Each time	N/A
R&S	Wideband Radio Communication Tester	CMW500	143458	2023-03-31	2024-03-30

** Statement of Traceability: China Certification ICT Co., Ltd (Dongguan) attests that all calibrations have been performed, traceable to National Primary Standards and International System of Units (SI).*

Test Frequency For Each Mode:

Operation Modes	Lowest Frequency (MHz)	Middle Frequency (MHz)	Highest Frequency (MHz)
WCDMA	1712.4	1732.6	1752.6

Test Data:

FCC§2.1046;§27.50(d)(4)
RF Output Power:

Test Mode	Conducted Average Output Power(dBm)			Maximum EIRP(dBm)	EIRP Limit(dBm)
	Lowest Channel	Middle Channel	Highest Channel		
WCDMA R99 Subtest 1	23.65	24.05	23.92	25.55	30
HSDPA Subtest 1	23.63	23.64	23.93	25.43	30
HSDPA Subtest 2	23.49	23.88	23.85	25.38	30
HSDPA Subtest 3	23.49	23.97	24.08	25.58	30
HSDPA Subtest 4	23.49	23.67	23.55	25.17	30
HSUPA Subtest 1	23.37	23.38	23.48	24.98	30
HSUPA Subtest 2	23.21	23.17	23.42	24.92	30
HSUPA Subtest 3	23.05	23.45	23.19	24.95	30
HSUPA Subtest 4	22.95	23.18	23.4	24.9	30
HSUPA Subtest 5	22.85	23.07	23.07	24.57	30
DC-HSDPA Subtest 1	22.83	23.19	22.94	24.69	30
DC-HSDPA Subtest 2	22.76	22.98	23.25	24.75	30
DC-HSDPA Subtest 3	22.76	22.8	23.21	24.71	30
DC-HSDPA Subtest 4	22.59	22.66	22.75	24.25	30
HSPA+ Subtest 1	22.49	22.77	22.91	24.41	30
Note: EIRP=Conducted Power(dBm) - Cable loss(dB) + Antenna Gain(dBi)					
				Result:	**Pass**

4.5 Antenna Port Test Data and Results for WCDMA Band 5:

Serial Number:	2DS1-1	Test Date:	2023/11/30~2023/12/1
Test Site:	RF	Test Mode:	Transmitting
Tester:	One Luo	Test Result:	**Pass**

Environmental Conditions:					
Temperature: (℃)	25.2~25.9	Relative Humidity: (%)	39~42	ATM Pressure: (kPa)	101.2~101.3

Test Equipment List and Details:

Manufacturer	Description	Model	Serial Number	Calibration Date	Calibration Due Date
zhuoxiang	Coaxial Cable	SMA-178	211001	Each time	N/A
YINSAIGE	Coaxial Cable	SS402	SJ0100001	Each time	N/A
Mini-Circuits	DC Block	BLK-18-S+	1554403	Each time	N/A
R&S	Wideband Radio Communication Tester	CMW500	143458	2023-03-31	2024-03-30

** Statement of Traceability: China Certification ICT Co., Ltd (Dongguan) attests that all calibrations have been performed, traceable to National Primary Standards and International System of Units (SI).*

Test Frequency For Each Mode:

Operation Modes	Lowest Frequency (MHz)	Middle Frequency (MHz)	Highest Frequency (MHz)
WCDMA	826.4	836.6	846.6

Test Data:

FCC§2.1046;§ 22.913 (a)
RF Output Power:

Test Mode	Conducted Average Output Power(dBm)			Maximum ERP(dBm)	ERP Limit(dBm)
	Lowest Channel	Middle Channel	Highest Channel		
WCDMA R99 Subtest 1	23.6	23.68	24.07	20.43	38.45
HSDPA Subtest 1	23.52	23.61	23.69	20.05	38.45
HSDPA Subtest 2	23.37	23.61	23.67	20.03	38.45
HSDPA Subtest 3	23.23	23.59	23.79	20.15	38.45
HSDPA Subtest 4	23.16	23.15	23.33	19.69	38.45
HSUPA Subtest 1	23.1	23.18	23.51	19.87	38.45
HSUPA Subtest 2	22.99	22.99	23.12	19.48	38.45
HSUPA Subtest 3	22.89	23.12	23.24	19.6	38.45
HSUPA Subtest 4	22.72	23.04	23.15	19.51	38.45
HSUPA Subtest 5	22.69	23.1	22.99	19.46	38.45
DC-HSDPA Subtest 1	22.54	22.59	22.74	19.1	38.45
DC-HSDPA Subtest 2	22.41	22.85	22.84	19.21	38.45
DC-HSDPA Subtest 3	22.35	22.88	22.76	19.24	38.45
DC-HSDPA Subtest 4	22.27	22.77	22.83	19.19	38.45
HSPA+ Subtest 1	22.26	22.76	22.26	19.12	38.45
Note: ERP=Conducted Power(dBm) - Cable loss(dB) + Antenna Gain(dBd)					
				Result:	**Pass**

4.6Antenna Port Test Data and Results for LTE Band 2

Serial Number:	2DS1-1	Test Date:	2023/11/30~2023/12/1
Test Site:	RF	Test Mode:	Transmitting
Tester:	One Luo	Test Result:	**Pass**

Environmental Conditions:					
Temperature: (℃)	25.2~25.9	Relative Humidity: (%)	39~42	ATM Pressure: (kPa)	101.2~101.3

Test Equipment List and Details:

Manufacturer	Description	Model	Serial Number	Calibration Date	Calibration Due Date
zhuoxiang	Coaxial Cable	SMA-178	211001	Each time	N/A
YINSAIGE	Coaxial Cable	SS402	SJ0100001	Each time	N/A
Mini-Circuits	DC Block	BLK-18-S+	1554403	Each time	N/A
R&S	Wideband Radio Communication Tester	CMW500	143458	2023-03-31	2024-03-30

** Statement of Traceability: China Certification ICT Co., Ltd (Dongguan) attests that all calibrations have been performed, traceable to National Primary Standards and International System of Units (SI).*

Test Frequency For Each Mode:

Operation Bandwidth	Lowest Frequency (MHz)	Middle Frequency (MHz)	Highest Frequency (MHz)
1.4MHz	1850.7	1880	1909.3
3MHz	1851.5	1880	1908.5
5MHz	1852.5	1880	1907.5
10MHz	1855	1880	1905
15MHz	1857.5	1880	1902.5
20MHz	1860	1880	1900

Test Data:

FCC§2.1046;§ 24.232

RF Output Power:

Test Bandwidth & Modulation	Resource Block & RB offset	Conducted Average Output Power(dBm)			Maximum EIRP (dBm)	EIRP Limit (dBm)
		Lowest Channel	Middle Channel	Highest Channel		
1.4MHz QPSK	RB1#0	22.99	23.44	22.73	25.55	33
	RB1#3	22.86	23.24	22.67		
	RB1#5	23.1	23.27	22.61		
	RB3#0	22.91	23.31	22.83		
	RB3#3	23.05	23.34	22.78		
	RB6#0	22.05	22.37	21.78		
1.4MHz 16QAM	RB1#0	22.06	22.43	22.76	24.87	33
	RB1#3	22.12	22.64	22.58		
	RB1#5	22.09	22.47	22.52		
	RB3#0	22.2	22.37	21.8		
	RB3#3	22.19	22.3	21.57		
	RB6#0	20.95	21.58	20.86		
3MHz QPSK	RB1#0	23.02	23.2	23.19	25.59	33
	RB1#8	22.91	23.48	22.9		
	RB1#14	22.86	23.06	22.76		
	RB6#0	22.14	22.39	22		
	RB6#9	22.05	22.1	21.79		
	RB15#0	21.98	22.27	22.08		
3MHz 16QAM	RB1#0	22.26	22.64	22	25.02	33
	RB1#8	22.29	22.91	21.97		
	RB1#14	21.96	22.46	21.56		
	RB6#0	20.99	21.39	21.24		
	RB6#9	21.02	21.32	20.87		
	RB15#0	20.97	21.49	21.13		
5MHz QPSK	RB1#0	23.04	23.33	22.71	25.63	33
	RB1#13	22.98	23.52	22.74		
	RB1#24	23.12	22.91	22.46		
	RB15#0	22.05	22.32	22		
	RB15#10	21.99	22.15	22.02		
	RB25#0	21.98	22.24	22.02		
5MHz 16QAM	RB1#0	22.3	22.42	21.89	24.63	33
	RB1#13	22.4	22.25	21.59		
	RB1#24	22.52	22.01	21.28		
	RB15#0	21.35	21.46	20.93		
	RB15#10	21.3	21.2	20.97		
	RB25#0	21.05	21.41	21.08		
10MHz QPSK	RB1#0	23.01	23.17	22.77	25.51	33
	RB1#25	23.27	23.4	23.05		

	RB1#49	22.86	22.56	22.69		
	RB25#0	22.04	22.21	21.77		
	RB25#25	21.87	21.84	21.95		
	RB50#0	21.97	21.98	21.87		
10MHz 16QAM	RB1#0	22.38	22.79	21.76	25.13	33
	RB1#25	22.49	23.02	22.13		
	RB1#49	22.24	22.17	21.51		
	RB25#0	21.05	21.19	20.9		
	RB25#25	20.9	20.8	21.21		
	RB50#0	20.96	21.14	20.97		
15MHz QPSK	RB1#0	23.12	23.26	22.44	25.46	33
	RB1#38	23.1	23.35	22.73		
	RB1#74	23.11	22.3	22.54		
	RB36#0	22.02	22.2	21.51		
	RB36#39	22.03	21.6	21.97		
	RB75#0	22.04	21.95	21.79		
15MHz 16QAM	RB1#0	22.28	22.55	21.52	24.77	33
	RB1#38	22.01	22.66	22.07		
	RB1#74	22.16	21.78	21.73		
	RB36#0	21.04	21.27	20.4		
	RB36#39	21.06	20.67	21.04		
	RB75#0	21.08	20.96	20.65		
20MHz QPSK	RB1#0	23.17	23.09	22.34	25.67	33
	RB1#50	23.04	23.56	23.14		
	RB1#99	23.28	22.6	22.7		
	RB50#0	22.2	22.3	21.58		
	RB50#50	22.36	21.79	21.96		
	RB100#0	22.19	21.94	21.77		
20MHz 16QAM	RB1#0	22.08	22.73	22.14	25.45	33
	RB1#50	22.12	23.34	22.61		
	RB1#99	22.11	21.69	22.34		
	RB50#0	21.17	21.11	20.6		
	RB50#50	21.17	20.72	21.11		
	RB100#0	21.12	20.9	20.69		
Note: EIRP=Conducted Power(dBm) - Cable loss(dB) + Antenna Gain(dBi)						
					Result:	**Pass**

4.7 Antenna Port Test Data and Results for LTE Band 4

Serial Number:	2DS1-1	Test Date:	2023/11/30~2023/12/1
Test Site:	RF	Test Mode:	Transmitting
Tester:	One Luo	Test Result:	**Pass**

Environmental Conditions:					
Temperature: (℃)	25.2~25.9	Relative Humidity: (%)	39~42	ATM Pressure: (kPa)	101.2~101.3

Test Equipment List and Details:

Manufacturer	Description	Model	Serial Number	Calibration Date	Calibration Due Date
zhuoxiang	Coaxial Cable	SMA-178	211001	Each time	N/A
YINSAIGE	Coaxial Cable	SS402	SJ0100001	Each time	N/A
Mini-Circuits	DC Block	BLK-18-S+	1554403	Each time	N/A
R&S	Wideband Radio Communication Tester	CMW500	143458	2023-03-31	2024-03-30

** Statement of Traceability: China Certification ICT Co., Ltd (Dongguan) attests that all calibrations have been performed, traceable to National Primary Standards and International System of Units (SI).*

Test Frequency For Each Mode:

Operation Bandwidth	Lowest Frequency (MHz)	Middle Frequency (MHz)	Highest Frequency (MHz)
1.4MHz	1710.7	1732.5	1754.3
3MHz	1711.5	1732.5	1753.5
5MHz	1712.5	1732.5	1752.5
10MHz	1715	1732.5	1750
15MHz	1717.5	1732.5	1747.5
20MHz	1720	1732.5	1745

Test Data:

FCC§2.1046;§ 27.50(d)(4)

RF Output Power:

Test Bandwidth & Modulation	Resource Block & RB offset	Conducted Average Output Power(dBm)			Maximum EIRP (dBm)	EIRP Limit (dBm)
		Lowest Channel	Middle Channel	Highest Channel		
1.4MHz QPSK	RB1#0	22.99	22.79	23.38	25.2	30
	RB1#3	23.04	22.88	23.5		
	RB1#5	22.89	23.06	23.57		
	RB3#0	23.01	22.99	23.7		
	RB3#3	22.96	22.98	23.42		
	RB6#0	22.2	22.08	22.54		
1.4MHz 16QAM	RB1#0	22.48	21.93	22.49	24.39	30
	RB1#3	22.89	21.64	22.87		
	RB1#5	22.32	21.99	22.79		
	RB3#0	21.99	22.04	22.59		
	RB3#3	22.06	22.11	22.63		
	RB6#0	21.12	20.87	21.54		
3MHz QPSK	RB1#0	23.2	22.81	23.34	25.21	30
	RB1#8	23.31	23.06	23.4		
	RB1#14	23.37	23.07	23.71		
	RB6#0	22.11	22.08	22.41		
	RB6#9	22.23	21.96	22.5		
	RB15#0	22.19	22.03	22.59		
3MHz 16QAM	RB1#0	22.33	21.74	22.62	24.34	30
	RB1#8	22.84	21.49	22.74		
	RB1#14	22.8	21.62	22.75		
	RB6#0	21.35	20.99	21.38		
	RB6#9	21.31	20.87	21.77		
	RB15#0	21.26	21.01	21.53		
5MHz QPSK	RB1#0	22.92	22.81	23.65	25.15	30
	RB1#13	22.93	22.97	23.26		
	RB1#24	22.97	22.87	23.28		
	RB15#0	22.26	22.08	22.42		
	RB15#10	22.28	22.13	22.5		
	RB25#0	22.29	22.08	22.41		
5MHz 16QAM	RB1#0	22.37	22.14	21.85	24.14	30
	RB1#13	22.63	21.83	21.85		
	RB1#24	22.64	21.8	21.88		
	RB15#0	21.25	21.01	21.18		
	RB15#10	21.08	20.88	21.41		
	RB25#0	21.12	21.05	21.23		
10MHz QPSK	RB1#0	23.18	22.76	23.25	24.94	30
	RB1#25	23.27	22.52	23.42		

	RB1#49	23.32	22.42	23.44		
	RB25#0	22.18	21.33	22.3		
	RB25#25	22.38	21.61	22.36		
	RB50#0	22.19	21.75	22.28		
10MHz 16QAM	RB1#0	22.23	21.76	22.45	24.2	30
	RB1#25	22.33	21.57	22.7		
	RB1#49	22.2	21.3	22.6		
	RB25#0	20.92	20.85	21.3		
	RB25#25	21.15	20.82	21.42		
	RB50#0	20.77	20.89	21.3		
15MHz QPSK	RB1#0	23.01	22.48	22.76	24.67	30
	RB1#38	23.17	22.42	22.81		
	RB1#74	23.01	22.56	22.68		
	RB36#0	22.14	21.4	21.64		
	RB36#39	22.29	21.45	21.63		
	RB75#0	22.11	21.54	21.54		
15MHz 16QAM	RB1#0	22.87	21.38	21.78	24.6	30
	RB1#38	23.1	21.37	22.25		
	RB1#74	22.19	21.2	21.78		
	RB36#0	20.87	20.38	20.23		
	RB36#39	20.92	20.41	20.33		
	RB75#0	20.98	20.25	20.43		
20MHz QPSK	RB1#0	23.05	23.11	23.21	25.14	30
	RB1#50	23.57	23.03	23.64		
	RB1#99	23.23	23.36	23.54		
	RB50#0	22.27	22.19	22.48		
	RB50#50	22.13	22.24	22.63		
	RB100#0	22.22	22.24	22.58		
20MHz 16QAM	RB1#0	22.29	22.79	22.69	24.86	30
	RB1#50	22.58	22.96	23.36		
	RB1#99	22.13	22.51	22.73		
	RB50#0	21.22	21.05	21.57		
	RB50#50	21.18	21.14	21.76		
	RB100#0	21.2	21.16	21.64		
Note: EIRP=Conducted Power(dBm) - Cable loss(dB) + Antenna Gain(dBi)						
					Result:	**Pass**

4.8 Antenna Port Test Data and Results for LTE Band 5

Serial Number:	2DS1-1	Test Date:	2023/11/30~2023/12/1
Test Site:	RF	Test Mode:	Transmitting
Tester:	One Luo	Test Result:	**Pass**

Environmental Conditions:					
Temperature: (℃)	25.2~25.9	Relative Humidity: (%)	39~42	ATM Pressure: (kPa)	101.2~101.3

Test Equipment List and Details:

Manufacturer	Description	Model	Serial Number	Calibration Date	Calibration Due Date
zhuoxiang	Coaxial Cable	SMA-178	211001	Each time	N/A
YINSAIGE	Coaxial Cable	SS402	SJ0100001	Each time	N/A
Mini-Circuits	DC Block	BLK-18-S+	1554403	Each time	N/A
R&S	Wideband Radio Communication Tester	CMW500	143458	2023-03-31	2024-03-30

** Statement of Traceability: China Certification ICT Co., Ltd (Dongguan) attests that all calibrations have been performed, traceable to National Primary Standards and International System of Units (SI).*

Test Frequency For Each Mode:

Operation Bandwidth	Lowest Frequency (MHz)	Middle Frequency (MHz)	Highest Frequency (MHz)
1.4MHz	824.7	836.5	848.3
3MHz	825.5	836.5	847.5
5MHz	826.5	836.5	846.5
10MHz	829	836.5	844

Test Data:

FCC§2.1046;§ 22.913 (a)

RF Output Power:

Test Bandwidth & Modulation	Resource Block & RB offset	Conducted Average Output Power(dBm)			Maximum ERP (dBm)	ERP Limit (dBm)
		Lowest Channel	Middle Channel	Highest Channel		
1.4MHz QPSK	RB1#0	23.54	23.86	23.56	20.28	38.45
	RB1#3	23.35	23.88	23.28		
	RB1#5	23.38	23.92	23.53		
	RB3#0	23.69	23.85	23.63		
	RB3#3	23.35	23.46	23.78		
	RB6#0	23.14	23.19	23.26		
1.4MHz 16QAM	RB1#0	23.68	23.1	23.3	20.15	38.45
	RB1#3	23.53	23.2	23.79		
	RB1#5	23.56	23.14	23.35		
	RB3#0	23.23	23.16	22.95		
	RB3#3	23.11	23.16	23.24		
	RB6#0	22.07	22.18	22.31		
3MHz QPSK	RB1#0	23.95	23.86	23.87	20.31	38.45
	RB1#8	23.83	23.57	23.63		
	RB1#14	23.51	23.84	23.65		
	RB6#0	23.17	23.18	23.33		
	RB6#9	23.27	23.13	23.2		
	RB15#0	23.16	23.14	23.35		
3MHz 16QAM	RB1#0	23.55	23	23.53	19.96	38.45
	RB1#8	23.6	22.98	23.45		
	RB1#14	23.33	23.17	23.46		
	RB6#0	22.41	22.23	22.22		
	RB6#9	22.17	22.1	22.36		
	RB15#0	22.31	22.27	22.5		
5MHz QPSK	RB1#0	23.62	23.56	23.6	20.28	38.45
	RB1#13	23.63	23.25	23.44		
	RB1#24	23.71	23.85	23.92		
	RB15#0	23.23	23.07	23.36		
	RB15#10	23.26	23.2	23.37		
	RB25#0	23.22	23.17	23.25		
5MHz 16QAM	RB1#0	23.39	23.04	22.77	19.91	38.45
	RB1#13	23.45	23.12	22.77		
	RB1#24	23.55	23.3	22.82		
	RB15#0	22.12	22.34	22.28		
	RB15#10	22.24	22.28	22.28		
	RB25#0	22.22	22.16	22.2		
10MHz QPSK	RB1#0	23.9	23.76	23.92	20.28	38.45
	RB1#25	23.83	23.65	23.34		

	RB1#49	23.89	23.59	23.83		
	RB25#0	23.33	23.18	23.27		
	RB25#25	23.3	23.35	23.27		
	RB50#0	23.3	23.21	23.25		
10MHz 16QAM	RB1#0	23.31	23.65	23.24	20.23	38.45
	RB1#25	23.73	23.87	23.39		
	RB1#49	23.55	23.84	23.3		
	RB25#0	22.38	22.25	22.34		
	RB25#25	22.37	22.32	22.33		
	RB50#0	22.34	22.1	22.23		
Note: ERP=Conducted Power(dBm) - Cable loss(dB) + Antenna Gain(dBd)						
					Result:	**Pass**

4.9 Antenna Port Test Data and Results for LTE Band 7

Serial Number:	2DS1-1	Test Date:	2023/11/30~2023/12/1
Test Site:	RF	Test Mode:	Transmitting
Tester:	One Luo	Test Result:	**Pass**

Environmental Conditions:					
Temperature: (℃)	25.2~25.9	Relative Humidity: (%)	39~42	ATM Pressure: (kPa)	101.2~101.3

Test Equipment List and Details:

Manufacturer	Description	Model	Serial Number	Calibration Date	Calibration Due Date
zhuoxiang	Coaxial Cable	SMA-178	211001	Each time	N/A
YINSAIGE	Coaxial Cable	SS402	SJ0100001	Each time	N/A
Mini-Circuits	DC Block	BLK-18-S+	1554403	Each time	N/A
R&S	Wideband Radio Communication Tester	CMW500	143458	2023-03-31	2024-03-30

** Statement of Traceability: China Certification ICT Co., Ltd (Dongguan) attests that all calibrations have been performed, traceable to National Primary Standards and International System of Units (SI).*

Test Frequency For Each Mode:

Operation Bandwidth	Lowest Frequency (MHz)	Middle Frequency (MHz)	Highest Frequency (MHz)
5MHz	2502.5	2535	2567.5
10MHz	2505	2535	2565
15MHz	2507.5	2535	2562.5
20MHz	2510	2535	2560

Test Data:

FCC§2.1046;§ 27.50(h)(2)

RF Output Power:

Test Bandwidth & Modulation	Resource Block & RB offset	Conducted Average Output Power(dBm)			Maximum EIRP (dBm)	EIRP Limit (dBm)
		Lowest Channel	Middle Channel	Highest Channel		
5MHz QPSK	RB1#0	23.07	23.32	22.79	25.99	33
	RB1#13	23.05	23.28	22.92		
	RB1#24	23.09	23.19	22.76		
	RB15#0	22.21	22.19	21.97		
	RB15#10	22.31	22.24	21.8		
	RB25#0	22.23	22.21	21.96		
5MHz 16QAM	RB1#0	22.56	22.01	21.37	25.63	33
	RB1#13	22.96	21.85	21.45		
	RB1#24	22.66	21.98	21.03		
	RB15#0	20.99	21.12	20.95		
	RB15#10	21.07	21.17	20.77		
	RB25#0	21.21	21.15	20.95		
10MHz QPSK	RB1#0	21.77	21.46	21.53	24.63	33
	RB1#25	21.96	21.4	21.47		
	RB1#49	21.63	21.3	21.38		
	RB25#0	20.62	20.35	20.39		
	RB25#25	20.76	20.48	20.19		
	RB50#0	20.68	20.44	20.35		
10MHz 16QAM	RB1#0	20.84	21.19	20.35	24.05	33
	RB1#25	21.29	21.38	20.22		
	RB1#49	20.68	21.02	19.88		
	RB25#0	19.52	19.67	19.73		
	RB25#25	19.71	19.43	19.23		
	RB50#0	19.48	19.47	19.34		
15MHz QPSK	RB1#0	21.62	21.39	20.93	24.42	33
	RB1#38	21.75	21.18	21.09		
	RB1#74	21.48	21.07	20.84		
	RB36#0	20.62	20.34	20.13		
	RB36#39	20.54	20.34	19.96		
	RB75#0	20.43	20.27	20.08		
15MHz 16QAM	RB1#0	20.96	21.18	20.2	23.85	33
	RB1#38	20.79	20.66	20.2		
	RB1#74	20.73	20.67	20.05		
	RB36#0	19.44	19.23	19.31		
	RB36#39	19.36	19.25	19.06		
	RB75#0	19.36	19.2	19.14		
20MHz QPSK	RB1#0	21.51	21.92	21.13	24.66	33
	RB1#50	21.99	21.8	21.23		

	RB1#99	21.54	21.47	20.84		
	RB50#0	20.76	20.31	20.1		
	RB50#50	20.64	20.43	20.07		
	RB100#0	20.75	20.36	20.09		
20MHz 16QAM	RB1#0	20.93	20.4	20.84	24.13	33
	RB1#50	21.46	20.51	20.96		
	RB1#99	20.5	20.26	20.61		
	RB50#0	19.68	19.29	19.09		
	RB50#50	19.41	19.36	19.08		
	RB100#0	19.53	19.07	19.19		
Note: EIRP=Conducted Power(dBm) - Cable loss(dB) + Antenna Gain(dBi)						
					Result:	**Pass**

4.10 Antenna Port Test Data and Results for LTE Band 12

Serial Number:	2DS1-1	Test Date:	2023/11/30~2023/12/1
Test Site:	RF	Test Mode:	Transmitting
Tester:	One Luo	Test Result:	**Pass**

Environmental Conditions:					
Temperature: (℃)	25.2~25.9	Relative Humidity: (%)	39~42	ATM Pressure: (kPa)	101.2~101.3

Test Equipment List and Details:

Manufacturer	Description	Model	Serial Number	Calibration Date	Calibration Due Date
zhuoxiang	Coaxial Cable	SMA-178	211001	Each time	N/A
YINSAIGE	Coaxial Cable	SS402	SJ0100001	Each time	N/A
Mini-Circuits	DC Block	BLK-18-S+	1554403	Each time	N/A
R&S	Wideband Radio Communication Tester	CMW500	143458	2023-03-31	2024-03-30

** Statement of Traceability: China Certification ICT Co., Ltd (Dongguan) attests that all calibrations have been performed, traceable to National Primary Standards and International System of Units (SI).*

Test Frequency For Each Mode:

Operation Bandwidth	Lowest Frequency (MHz)	Middle Frequency (MHz)	Highest Frequency (MHz)
1.4MHz	699.7	707.5	715.3
3MHz	700.5	707.5	714.5
5MHz	701.5	707.5	713.5
10MHz	704	707.5	711

Test Data:

FCC§2.1046;§ 27.50(c) (10)						
RF Output Power:						
Test Bandwidth & Modulation	Resource Block & RB offset	Conducted Average Output Power(dBm)			Maximum ERP (dBm)	ERP Limit (dBm)
		Lowest Channel	Middle Channel	Highest Channel		
1.4MHz QPSK	RB1#0	22.89	22.34	22.63	19.23	34.77
	RB1#3	22.8	22.2	22.97		
	RB1#5	22.81	22.27	22.71		
	RB3#0	22.43	22.5	22.64		
	RB3#3	22.44	22.4	22.79		
	RB6#0	21.41	21.5	21.73		
1.4MHz 16QAM	RB1#0	21.69	21.91	21.69	18.37	34.77
	RB1#3	21.9	21.85	21.82		
	RB1#5	21.76	21.69	21.76		
	RB3#0	21.11	21.79	21.7		
	RB3#3	21.14	21.61	22.11		
	RB6#0	20.61	20.27	20.7		
3MHz QPSK	RB1#0	22.95	22.75	23.17	19.43	34.77
	RB1#8	22.8	22.62	22.73		
	RB1#14	22.86	22.64	23.11		
	RB6#0	21.84	21.66	21.86		
	RB6#9	21.9	21.69	21.96		
	RB15#0	21.83	21.72	21.91		
3MHz 16QAM	RB1#0	21.77	22.06	22.4	18.66	34.77
	RB1#8	21.64	21.77	22.12		
	RB1#14	21.77	21.37	22.39		
	RB6#0	20.62	20.81	20.75		
	RB6#9	20.69	20.49	21.05		
	RB15#0	20.72	20.67	20.86		
5MHz QPSK	RB1#0	22.88	22.71	22.85	19.4	34.77
	RB1#13	23.08	22.64	23.07		
	RB1#24	23.02	22.6	23.14		
	RB15#0	21.82	21.86	21.92		
	RB15#10	21.94	21.8	22.11		
	RB25#0	21.78	21.8	21.97		
5MHz 16QAM	RB1#0	21.53	22.1	22.11	18.37	34.77
	RB1#13	21.4	22.11	21.75		
	RB1#24	21.46	22.05	21.81		
	RB15#0	20.77	20.57	20.99		
	RB15#10	20.67	20.5	21.08		
	RB25#0	20.75	20.65	20.86		
10MHz QPSK	RB1#0	22.92	22.72	22.78	19.52	34.77
	RB1#25	23.26	22.93	23.2		

	RB1#49	22.77	23.1	22.94		
	RB25#0	21.76	21.83	21.67		
	RB25#25	21.79	21.79	22.09		
	RB50#0	21.83	21.88	21.83		
10MHz 16QAM	RB1#0	21.82	22.01	22.06	18.78	34.77
	RB1#25	21.62	22.18	22.2		
	RB1#49	21.25	22.28	22.52		
	RB25#0	21.07	20.73	20.78		
	RB25#25	21.04	20.73	21.09		
	RB50#0	20.72	20.74	20.91		
Note: ERP=Conducted Power(dBm) - Cable loss(dB) + Antenna Gain(dBd)						
					Result:	**Pass**

4.11 Antenna Port Test Data and Results for LTE Band 13

Serial Number:	2DS1-1	Test Date:	2023/11/30~2023/12/1
Test Site:	RF	Test Mode:	Transmitting
Tester:	One Luo	Test Result:	**Pass**

Environmental Conditions:					
Temperature: (℃)	25.2~25.9	Relative Humidity: (%)	39~42	ATM Pressure: (kPa)	101.2~101.3

Test Equipment List and Details:

Manufacturer	Description	Model	Serial Number	Calibration Date	Calibration Due Date
zhuoxiang	Coaxial Cable	SMA-178	211001	Each time	N/A
YINSAIGE	Coaxial Cable	SS402	SJ0100001	Each time	N/A
Mini-Circuits	DC Block	BLK-18-S+	1554403	Each time	N/A
R&S	Wideband Radio Communication Tester	CMW500	143458	2023-03-31	2024-03-30

** Statement of Traceability: China Certification ICT Co., Ltd (Dongguan) attests that all calibrations have been performed, traceable to National Primary Standards and International System of Units (SI).*

Test Frequency For Each Mode:

Operation Bandwidth	Lowest Frequency (MHz)	Middle Frequency (MHz)	Highest Frequency (MHz)
5MHz	779.5	782	784.5
10MHz	/	782	/

Test Data:

FCC§2.1046;§ 27.50(c) (10)						
RF Output Power:						
Test Bandwidth & Modulation	Resource Block & RB offset	Conducted Average Output Power(dBm)			Maximum ERP (dBm)	ERP Limit (dBm)
		Lowest Channel	Middle Channel	Highest Channel		
5MHz QPSK	RB1#0	22.99	22.76	22.82	17.2	34.77
	RB1#13	22.88	22.78	23.12		
	RB1#24	22.94	22.93	23.26		
	RB15#0	22.01	22.03	22.16		
	RB15#10	22.06	21.99	22.19		
	RB25#0	22	22.04	22.07		
5MHz 16QAM	RB1#0	22.52	21.77	21.4	16.46	34.77
	RB1#13	22.33	21.74	21.66		
	RB1#24	22.19	21.81	21.58		
	RB15#0	20.98	20.98	20.83		
	RB15#10	20.87	20.85	21.31		
	RB25#0	20.79	20.84	21.25		
10MHz QPSK	RB1#0	/	23.05	/	17.2	34.77
	RB1#25	/	22.96	/		
	RB1#49	/	23.26	/		
	RB25#0	/	22.09	/		
	RB25#25	/	22.23	/		
	RB50#0	/	22.18	/		
10MHz 16QAM	RB1#0	/	22	/	15.94	34.77
	RB1#25	/	21.89	/		
	RB1#49	/	21.61	/		
	RB25#0	/	21.19	/		
	RB25#25	/	20.88	/		
	RB50#0	/	21.09	/		
Note: ERP=Conducted Power(dBm) - Cable loss(dB) + Antenna Gain(dBd)						
					Result:	**Pass**

4.12 Antenna Port Test Data and Results for LTE Band 17

Serial Number:	2DS1-1	Test Date:	2023/11/30~2023/12/1
Test Site:	RF	Test Mode:	Transmitting
Tester:	One Luo	Test Result:	**Pass**

Environmental Conditions:					
Temperature: (℃)	25.2~25.9	Relative Humidity: (%)	39~42	ATM Pressure: (kPa)	101.2~101.3

Test Equipment List and Details:

Manufacturer	Description	Model	Serial Number	Calibration Date	Calibration Due Date
zhuoxiang	Coaxial Cable	SMA-178	211001	Each time	N/A
YINSAIGE	Coaxial Cable	SS402	SJ0100001	Each time	N/A
Mini-Circuits	DC Block	BLK-18-S+	1554403	Each time	N/A
R&S	Wideband Radio Communication Tester	CMW500	143458	2023-03-31	2024-03-30

** Statement of Traceability: China Certification ICT Co., Ltd (Dongguan) attests that all calibrations have been performed, traceable to National Primary Standards and International System of Units (SI).*

Test Frequency For Each Mode:

Operation Bandwidth	Lowest Frequency (MHz)	Middle Frequency (MHz)	Highest Frequency (MHz)
5MHz	706.5	710	713.5
10MHz	709	710	711

Test Data:

FCC§2.1046;§ 27.50(c) (10)

RF Output Power:

Test Bandwidth & Modulation	Resource Block & RB offset	Conducted Average Output Power(dBm)			Maximum ERP (dBm)	ERP Limit (dBm)
		Lowest Channel	Middle Channel	Highest Channel		
5MHz QPSK	RB1#0	23.6	23.91	24.07	20.37	34.77
	RB1#13	23.53	23.48	24.11		
	RB1#24	23.38	23.88	23.92		
	RB15#0	23.25	23.65	23.58		
	RB15#10	23.15	23.59	23.2		
	RB25#0	23.13	23.19	23.37		
5MHz 16QAM	RB1#0	22.98	23.3	23.12	19.64	34.77
	RB1#13	22.9	23.09	23.34		
	RB1#24	22.86	23.38	23.11		
	RB15#0	22.67	23.12	23.12		
	RB15#10	22.58	22.82	22.78		
	RB25#0	22.39	22.4	22.46		
10MHz QPSK	RB1#0	22.34	22.5	22.48	19.49	34.77
	RB1#25	22.29	22.42	22.39		
	RB1#49	22.11	22.07	22.53		
	RB25#0	22.48	22.88	22.84		
	RB25#25	22.45	22.94	22.52		
	RB50#0	23.02	23.01	23.23		
10MHz 16QAM	RB1#0	22.85	22.96	23.07	19.33	34.77
	RB1#25	22.67	22.89	22.75		
	RB1#49	22.53	22.81	23.06		
	RB25#0	22.35	22.74	22.95		
	RB25#25	22.22	22.75	22.79		
	RB50#0	22.19	22.26	22.35		
Note: ERP=Conducted Power(dBm) - Cable loss(dB) + Antenna Gain(dBd)						
					Result:	**Pass**

4.13 Antenna Port Test Data and Results for LTE Band 25

Serial Number:	2DS1-1	Test Date:	2023/11/30~2023/12/1
Test Site:	RF	Test Mode:	Transmitting
Tester:	One Luo	Test Result:	**Pass**

Environmental Conditions:					
Temperature: (℃)	25.2~25.9	Relative Humidity: (%)	39~42	ATM Pressure: (kPa)	101.2~101.3

Test Equipment List and Details:

Manufacturer	Description	Model	Serial Number	Calibration Date	Calibration Due Date
zhuoxiang	Coaxial Cable	SMA-178	211001	Each time	N/A
YINSAIGE	Coaxial Cable	SS402	SJ0100001	Each time	N/A
Mini-Circuits	DC Block	BLK-18-S+	1554403	Each time	N/A
R&S	Wideband Radio Communication Tester	CMW500	143458	2023-03-31	2024-03-30

** Statement of Traceability: China Certification ICT Co., Ltd (Dongguan) attests that all calibrations have been performed, traceable to National Primary Standards and International System of Units (SI).*

Test Frequency For Each Mode:

Operation Bandwidth	Lowest Frequency (MHz)	Middle Frequency (MHz)	Highest Frequency (MHz)
1.4MHz	1850.7	1882.5	1914.3
3MHz	1851.5	1882.5	1913.5
5MHz	1852.5	1882.5	1912.5
10MHz	1855	1882.5	1910
15MHz	1857.5	1882.5	1907.5
20MHz	1860	1882.5	1905

Test Data:

FCC§2.1046;§ 24.232

RF Output Power:

Test Bandwidth & Modulation	Resource Block & RB offset	Conducted Average Output Power(dBm)			Maximum EIRP (dBm)	EIRP Limit (dBm)
		Lowest Channel	Middle Channel	Highest Channel		
1.4MHz QPSK	RB1#0	23.45	23.8	23.46	25.91	33
	RB1#3	23.37	23.42	23.36		
	RB1#5	23.54	23.55	23.53		
	RB3#0	23.47	23.04	23.49		
	RB3#3	23.31	23.39	23.13		
	RB6#0	22.9	23.18	23.18		
1.4MHz 16QAM	RB1#0	22.92	22.53	23.33	25.44	33
	RB1#3	22.95	22.83	22.82		
	RB1#5	22.48	22.45	22.99		
	RB3#0	22.69	22.52	22.24		
	RB3#3	22.48	22.39	22.65		
	RB6#0	22.67	22.64	22.53		
3MHz QPSK	RB1#0	22.67	22.21	22.22	25.57	33
	RB1#8	22.06	22.16	22.26		
	RB1#14	22.41	21.87	22.41		
	RB6#0	22.91	22.89	23.35		
	RB6#9	22.86	22.92	23.46		
	RB15#0	22.83	23.3	22.93		
3MHz 16QAM	RB1#0	22.65	22.71	22.72	25.4	33
	RB1#8	22.57	22.74	22.68		
	RB1#14	22.54	23.08	23.1		
	RB6#0	22.38	22.89	22.65		
	RB6#9	22.89	23.14	23.26		
	RB15#0	22.84	23.29	23.19		
5MHz QPSK	RB1#0	22.72	22.88	23.29	25.4	33
	RB1#13	22.63	22.82	22.65		
	RB1#24	22.46	22.5	22.96		
	RB15#0	22.4	22.59	22.64		
	RB15#10	22.33	22.32	22.75		
	RB25#0	22.95	23.08	22.96		
5MHz 16QAM	RB1#0	22.92	23.4	23.44	25.55	33
	RB1#13	22.88	23.06	23.11		
	RB1#24	22.84	22.98	23.37		
	RB15#0	22.65	23.16	23.02		
	RB15#10	22.63	22.73	23.09		
	RB25#0	22.57	23.11	22.96		
10MHz QPSK	RB1#0	22.51	23.05	22.91	25.16	33
	RB1#25	22.32	22.86	22.49		

	RB1#49	22.13	22.16	22.72		
	RB25#0	21.97	22.2	22.04		
	RB25#25	21.9	22.21	22.13		
	RB50#0	21.73	22.11	22.13		
10MHz 16QAM	RB1#0	21.65	21.73	21.89	25.24	33
	RB1#25	22.85	22.98	23.13		
	RB1#49	22.7	22.94	22.99		
	RB25#0	22.53	22.92	22.57		
	RB25#25	22.38	22.62	22.38		
	RB50#0	22.28	22.49	22.41		
15MHz QPSK	RB1#0	22.18	22.5	22.78	24.89	33
	RB1#38	22.1	22.41	22.67		
	RB1#74	22.12	21.14	21.36		
	RB36#0	21.07	20.97	20.5		
	RB36#39	21.06	20.39	20.52		
	RB75#0	21.08	20.59	20.5		
15MHz 16QAM	RB1#0	21.19	21.47	20.67	24.55	33
	RB1#38	21.23	21.04	20.79		
	RB1#74	21.95	22.04	22.44		
	RB36#0	21.85	21.95	22.35		
	RB36#39	21.71	21.76	22.19		
	RB75#0	21.57	21.83	21.83		
20MHz QPSK	RB1#0	21.44	21.94	21.52	24.71	33
	RB1#50	21.29	21.82	21.74		
	RB1#99	21.26	21.56	21.67		
	RB50#0	22.15	22.22	22.6		
	RB50#50	22.13	22.53	22.17		
	RB100#0	22.05	22.2	22.49		
20MHz 16QAM	RB1#0	21.91	22.44	22.07	24.55	33
	RB1#50	21.8	21.92	22.28		
	RB1#99	21.76	22.26	22.31		
	RB50#0	21.75	21.88	22.03		
	RB50#50	21.55	21.91	21.64		
	RB100#0	21.54	22.08	21.68		
Note: EIRP=Conducted Power(dBm) - Cable loss(dB) + Antenna Gain(dBi)						
					Result:	**Pass**

4.14 Antenna Port Test Data and Results for LTE Band 26

Serial Number:	2DS1-1	Test Date:	2023/11/30~2023/12/1
Test Site:	RF	Test Mode:	Transmitting
Tester:	One Luo	Test Result:	**Pass**

Environmental Conditions:					
Temperature: (℃)	25.2~25.9	Relative Humidity: (%)	39~42	ATM Pressure: (kPa)	101.2~101.3

Test Equipment List and Details:

Manufacturer	Description	Model	Serial Number	Calibration Date	Calibration Due Date
zhuoxiang	Coaxial Cable	SMA-178	211001	Each time	N/A
YINSAIGE	Coaxial Cable	SS402	SJ0100001	Each time	N/A
Mini-Circuits	DC Block	BLK-18-S+	1554403	Each time	N/A
R&S	Wideband Radio Communication Tester	CMW500	143458	2023-03-31	2024-03-30

** Statement of Traceability: China Certification ICT Co., Ltd (Dongguan) attests that all calibrations have been performed, traceable to National Primary Standards and International System of Units (SI).*

For 814-824MHz

Test Frequency For Each Mode:

Operation Bandwidth	Lowest Frequency (MHz)	Middle Frequency (MHz)	Highest Frequency (MHz)
1.4MHz	814.7	819	823.3
3MHz	815.5	819	822.5
5MHz	816.5	819	821.5
10MHz	/	819	/

For 824-849MHz

Test Frequency For Each Mode:

Operation Bandwidth	Lowest Frequency (MHz)	Middle Frequency (MHz)	Highest Frequency (MHz)
1.4MHz	824.7	836.5	848.3
3MHz	825.5	836.5	847.5
5MHz	826.5	836.5	846.5
10MHz	829	836.5	844
15MHz	831.5	836.5	841.5

Test Data:

FCC§2.1046;§ 22.913 (a),§ 90.542						
RF Output Power: 814-824						
Test Bandwidth & Modulation	Resource Block & RB offset	Conducted Average Output Power(dBm)			Maximum ERP (dBm)	ERP Limit (dBm)
		Lowest Channel	Middle Channel	Highest Channel		
1.4MHz QPSK	RB1#0	22.62	22.79	22.88	18.43	38.45
	RB1#3	22.63	22.35	22.38		
	RB1#5	22.55	22.37	22.4		
	RB3#0	22.39	22.31	22.52		
	RB3#3	22.28	22.32	22.48		
	RB6#0	21.44	21.4	21.6		
1.4MHz 16QAM	RB1#0	21.32	21.58	21.63	17.5	38.45
	RB1#3	21.65	21.66	21.85		
	RB1#5	21.7	21.66	21.51		
	RB3#0	21.39	21.38	21.79		
	RB3#3	21.3	21.33	21.95		
	RB6#0	20.25	20.4	20.83		
3MHz QPSK	RB1#0	22.53	22.35	22.51	18.18	38.45
	RB1#8	22.51	22.6	22.63		
	RB1#14	22.42	22.62	22.54		
	RB6#0	21.44	21.5	21.64		
	RB6#9	21.55	21.69	21.62		
	RB15#0	21.56	21.55	21.74		
3MHz 16QAM	RB1#0	22.05	21.5	21.86	17.6	38.45
	RB1#8	21.77	21.44	21.92		
	RB1#14	21.65	21.51	21.56		
	RB6#0	20.47	20.59	20.92		
	RB6#9	20.53	20.49	20.75		
	RB15#0	20.41	20.44	20.88		
5MHz QPSK	RB1#0	22.3	22.25	22.6	18.37	38.45
	RB1#13	22.48	22.44	22.82		
	RB1#24	22.5	22.41	22.55		
	RB15#0	21.48	21.41	21.77		
	RB15#10	21.59	21.58	21.85		
	RB25#0	21.45	21.52	21.76		
5MHz 16QAM	RB1#0	21.85	21.24	21.21	17.68	38.45
	RB1#13	22.13	21.42	21.22		
	RB1#24	21.85	21.41	21.29		
	RB15#0	20.4	20.54	20.94		
	RB15#10	20.69	20.65	20.64		
	RB25#0	20.47	20.55	20.71		
10MHz QPSK	RB1#0	/	22.63	/	18.31	38.45
	RB1#25	/	22.66	/		
	RB1#49	/	22.76	/		

	RB25#0	/	21.52	/		
	RB25#25	/	21.69	/		
	RB50#0	/	21.74	/		
10MHz 16QAM	RB1#0	/	22.15	/	17.7	38.45
	RB1#25	/	22.09	/		
	RB1#49	/	22.08	/		
	RB25#0	/	20.77	/		
	RB25#25	/	20.92	/		
	RB50#0	/	20.69	/		
Note: ERP=Conducted Power(dBm) - Cable loss(dB) + Antenna Gain(dBd)						
					Result:	**Pass**

RF Output Power:824-849						
Test Bandwidth & Modulation	Resource Block & RB offset	Conducted Average Output Power(dBm)			Maximum ERP (dBm)	ERP Limit (dBm)
		Lowest Channel	Middle Channel	Highest Channel		
1.4MHz QPSK	RB1#0	22.85	23.12	23.24	19.66	38.45
	RB1#3	22.95	23.15	23.3		
	RB1#5	22.99	23.09	23.3		
	RB3#0	23.15	23.1	23.11		
	RB3#3	23.14	23.19	23.15		
	RB6#0	22	22.22	22.18		
1.4MHz 16QAM	RB1#0	22.3	22.2	22.28	19.06	38.45
	RB1#3	22.7	22.19	22.43		
	RB1#5	22.37	22.16	22.23		
	RB3#0	21.86	22.34	22.13		
	RB3#3	21.85	22.09	22.13		
	RB6#0	20.94	21.18	20.96		
3MHz QPSK	RB1#0	22.96	23.07	23.06	19.63	38.45
	RB1#8	22.91	23.21	23.02		
	RB1#14	23.08	23.27	23.18		
	RB6#0	22.03	22.09	22.08		
	RB6#9	22.05	22.13	22.12		
	RB15#0	22.12	22.21	22.16		
3MHz 16QAM	RB1#0	21.84	22.39	22.66	19.02	38.45
	RB1#8	21.95	22.52	22.59		
	RB1#14	21.7	22.43	22.55		
	RB6#0	21.17	21.1	21.45		
	RB6#9	20.97	21.17	21.16		
	RB15#0	21.24	21.08	21.12		
5MHz QPSK	RB1#0	23.04	23.18	23.03	19.54	38.45
	RB1#13	22.98	23.04	23.05		
	RB1#24	22.96	22.95	22.92		
	RB15#0	22.16	22.16	22.21		
	RB15#10	22.07	22.25	22.13		
	RB25#0	22.1	22.12	22.2		
5MHz 16QAM	RB1#0	21.93	21.75	22.39	18.75	38.45
	RB1#13	21.92	21.83	22.37		
	RB1#24	21.83	21.53	22.33		
	RB15#0	21.18	21.08	21.13		
	RB15#10	21.11	21.15	21.01		
	RB25#0	21.16	21.25	21.18		
10MHz QPSK	RB1#0	23.13	23.26	23.04	19.79	38.45
	RB1#25	23.43	23.34	23.28		
	RB1#49	23.29	23.03	23.09		
	RB25#0	22.18	22.26	22.07		

	RB25#25	22.21	22.1	22.23		
	RB50#0	22.25	22.15	22.16		
10MHz 16QAM	RB1#0	22.08	22.45	22.5	18.86	38.45
	RB1#25	22.21	22.28	22.5		
	RB1#49	21.84	22.38	22.5		
	RB25#0	21.34	21.31	21.35		
	RB25#25	21.31	21	21.24		
	RB50#0	21.16	21.08	21.16		
15MHz QPSK	RB1#0	23.21	23.08	23.08	19.8	38.45
	RB1#38	23.44	23.07	22.98		
	RB1#74	23.15	23.04	22.94		
	RB36#0	22.1	22.26	22.17		
	RB36#39	22.2	22.08	22.12		
	RB75#0	22.1	22.05	22.12		
15MHz 16QAM	RB1#0	22.47	22.89	22.26	19.25	38.45
	RB1#38	22.24	22.51	22.16		
	RB1#74	22.42	22.82	22.15		
	RB36#0	21.03	21.35	21.15		
	RB36#39	21.25	21.17	21.12		
	RB75#0	21.07	21.08	21.07		
Note: ERP=Conducted Power(dBm) - Cable loss(dB) + Antenna Gain(dBd)						
					Result:	**Pass**

4.15 Antenna Port Test Data and Results for LTE Band 41

Serial Number:	2DS1-1	Test Date:	2023/11/30~2023/12/1
Test Site:	RF	Test Mode:	Transmitting
Tester:	One Luo	Test Result:	**Pass**

Environmental Conditions:					
Temperature: (℃)	25.2~25.9	Relative Humidity: (%)	39~42	ATM Pressure: (kPa)	101.2~101.3

Test Equipment List and Details:

Manufacturer	Description	Model	Serial Number	Calibration Date	Calibration Due Date
zhuoxiang	Coaxial Cable	SMA-178	211001	Each time	N/A
YINSAIGE	Coaxial Cable	SS402	SJ0100001	Each time	N/A
Mini-Circuits	DC Block	BLK-18-S+	1554403	Each time	N/A
R&S	Wideband Radio Communication Tester	CMW500	143458	2023-03-31	2024-03-30

** Statement of Traceability: China Certification ICT Co., Ltd (Dongguan) attests that all calibrations have been performed, traceable to National Primary Standards and International System of Units (SI).*

Test Frequency For Each Mode:

Operation Bandwidth	Lowest Frequency (MHz)	Middle Frequency (MHz)	Highest Frequency (MHz)
5MHz	2557.5	2605	2652.5
10MHz	2560	2605	2650
15MHz	2562.5	2605	2647.5
20MHz	2565	2605	2645

Test Data:2496-2690

FCC§2.1046;§ 27.50(h)(2)						
RF Output Power:						
Test Bandwidth & Modulation	Resource Block & RB offset	Conducted Average Output Power(dBm)			Maximum EIRP (dBm)	EIRP Limit (dBm)
		Lowest Channel	Middle Channel	Highest Channel		
5MHz QPSK	RB1#0	23.75	23.83	23.87	26.55	33
	RB1#13	23.56	23.88	23.85		
	RB1#24	23.37	23.43	23.7		
	RB15#0	23.17	23.7	23.43		
	RB15#10	23	23.03	23.36		
	RB25#0	22.88	23.18	23.03		
5MHz 16QAM	RB1#0	22.73	23.23	23.07	25.9	33
	RB1#13	22.7	22.84	22.99		
	RB1#24	22.66	23.12	23.15		
	RB15#0	22.55	23.05	22.78		
	RB15#10	22.45	22.66	22.79		
	RB25#0	22.3	22.33	22.71		
10MHz QPSK	RB1#0	22.11	22.51	22.38	26	33
	RB1#25	22.99	23.16	23.33		
	RB1#49	22.86	23.15	23.1		
	RB25#0	22.75	23.25	22.87		
	RB25#25	22.61	22.92	23.09		
	RB50#0	22.52	22.69	22.96		
10MHz 16QAM	RB1#0	22.38	22.59	22.86	25.54	33
	RB1#25	22.47	22.81	22.56		
	RB1#49	22.47	22.51	22.72		
	RB25#0	22.4	22.61	22.59		
	RB25#25	22.35	22.87	22.66		
	RB50#0	22.21	22.17	22.26		
15MHz QPSK	RB1#0	22.13	22.26	22.37	25.04	33
	RB1#38	21.96	22.18	22.21		
	RB1#74	21.89	22.05	21.94		
	RB36#0	21.74	22.03	22.32		
	RB36#39	21.61	21.75	21.69		
	RB75#0	21.51	21.55	22.05		
15MHz 16QAM	RB1#0	21.42	21.83	21.94	24.96	33
	RB1#38	21.82	21.88	22.29		
	RB1#74	21.7	21.88	21.8		
	RB36#0	21.63	21.86	21.9		
	RB36#39	21.46	21.78	21.64		
	RB75#0	21.37	21.89	21.97		
20MHz QPSK	RB1#0	21.17	21.45	21.27	24.87	33
	RB1#50	21.99	22.2	22.12		

	RB1#99	21.79	21.99	21.82		
	RB50#0	20.78	20.95	20.98		
	RB50#50	21.82	22.09	22.08		
	RB100#0	21.72	21.91	21.79		
20MHz 16QAM	RB1#0	21.79	21.74	22.11	24.83	33
	RB1#50	21.72	21.68	21.94		
	RB1#99	21.68	21.64	21.84		
	RB50#0	21.62	22.16	21.74		
	RB50#50	21.55	21.78	21.59		
	RB100#0	21.42	21.53	21.6		
Note: EIRP=Conducted Power(dBm) - Cable loss(dB) + Antenna Gain(dBi)						
					Result:	**Pass**

4.16 Antenna Port Test Data and Results for LTE Band 66

Serial Number:	2DS1-1	Test Date:	2023/11/30~2023/12/1
Test Site:	RF	Test Mode:	Transmitting
Tester:	One Luo	Test Result:	**Pass**

Environmental Conditions:					
Temperature: (℃)	25.2~25.9	Relative Humidity: (%)	39~42	ATM Pressure: (kPa)	101.2~101.3

Test Equipment List and Details:

Manufacturer	Description	Model	Serial Number	Calibration Date	Calibration Due Date
zhuoxiang	Coaxial Cable	SMA-178	211001	Each time	N/A
YINSAIGE	Coaxial Cable	SS402	SJ0100001	Each time	N/A
Mini-Circuits	DC Block	BLK-18-S+	1554403	Each time	N/A
R&S	Wideband Radio Communication Tester	CMW500	143458	2023-03-31	2024-03-30

** Statement of Traceability: China Certification ICT Co., Ltd (Dongguan) attests that all calibrations have been performed, traceable to National Primary Standards and International System of Units (SI).*

Test Frequency For Each Mode:

Operation Bandwidth	Lowest Frequency (MHz)	Middle Frequency (MHz)	Highest Frequency (MHz)
1.4MHz	1710.7	1745	1779.3
3MHz	1711.5	1745	1778.5
5MHz	1712.5	1745	1777.5
10MHz	1715	1745	1775
15MHz	1717.5	1745	1772.5
20MHz	1720	1745	1770

Test Data:

FCC§2.1046;§ 27.50(d)(4)

RF Output Power:

Test Bandwidth & Modulation	Resource Block & RB offset	Conducted Average Output Power(dBm)			Maximum EIRP (dBm)	EIRP Limit (dBm)
		Lowest Channel	Middle Channel	Highest Channel		
1.4MHz QPSK	RB1#0	23.84	24.3	24	25.92	30
	RB1#3	23.8	24.21	24.09		
	RB1#5	23.72	23.73	24.06		
	RB3#0	23.71	24.16	24.3		
	RB3#3	23.54	23.53	23.99		
	RB6#0	23.42	23.62	23.75		
1.4MHz 16QAM	RB1#0	23.34	23.48	23.46	25.26	30
	RB1#3	23.18	23.64	23.34		
	RB1#5	23.14	23.35	23.32		
	RB3#0	22.96	22.97	23.16		
	RB3#3	22.83	22.88	22.91		
	RB6#0	22.65	23.06	22.79		
3MHz QPSK	RB1#0	22.57	23.02	22.78	24.89	30
	RB1#8	22.51	22.63	23.04		
	RB1#14	22.37	22.53	22.44		
	RB6#0	22.86	23.27	23.21		
	RB6#9	22.73	23.12	22.83		
	RB15#0	22.67	23.17	22.9		
3MHz 16QAM	RB1#0	22.6	22.86	22.6	24.79	30
	RB1#8	22.51	22.69	22.96		
	RB1#14	22.48	22.53	22.81		
	RB6#0	22.82	23.08	23.17		
	RB6#9	22.75	22.81	22.87		
	RB15#0	22.61	22.74	22.85		
5MHz QPSK	RB1#0	22.51	22.82	23.02	25.2	30
	RB1#13	22.37	22.63	22.91		
	RB1#24	22.3	22.45	22.78		
	RB15#0	22.99	23.47	23.58		
	RB15#10	22.86	23.27	23.44		
	RB25#0	22.69	23.09	22.91		
5MHz 16QAM	RB1#0	22.64	22.74	22.77	24.85	30
	RB1#13	22.51	22.8	22.77		
	RB1#24	22.33	22.63	22.64		
	RB15#0	22.79	22.94	22.96		
	RB15#10	22.72	22.72	23.03		
	RB25#0	22.67	23.07	23.23		
10MHz QPSK	RB1#0	22.59	23.01	22.94	24.84	30
	RB1#25	22.49	22.89	22.52		

	RB1#49	22.3	22.52	22.61		
	RB25#0	22.84	22.81	23.22		
	RB25#25	22.69	22.74	23.18		
	RB50#0	22.54	23	23.07		
10MHz 16QAM	RB1#0	22.44	22.82	22.54	24.44	30
	RB1#25	22.27	22.5	22.59		
	RB1#49	22.1	22.46	22.69		
	RB25#0	21.95	21.95	22.23		
	RB25#25	21.76	22.2	22.3		
	RB50#0	21.57	21.75	22.05		
15MHz QPSK	RB1#0	21.54	22.05	21.68	23.85	30
	RB1#38	21.4	21.83	21.55		
	RB1#74	21.3	21.77	21.87		
	RB36#0	21.12	21.38	21.32		
	RB36#39	21.97	22.18	22.23		
	RB75#0	21.8	22.18	21.84		
15MHz 16QAM	RB1#0	21.71	22.01	22.27	23.92	30
	RB1#38	21.7	21.8	22.22		
	RB1#74	21.6	21.79	21.8		
	RB36#0	21.57	21.98	21.65		
	RB36#39	21.98	22.3	22.23		
	RB75#0	21.95	22.07	21.98		
20MHz QPSK	RB1#0	21.94	22.22	22.2	23.95	30
	RB1#50	21.82	22.31	22.33		
	RB1#99	21.78	22.17	22.31		
	RB50#0	21.66	22.15	22.08		
	RB50#50	21.72	22.18	21.81		
	RB100#0	21.57	21.58	22.14		
20MHz 16QAM	RB1#0	22.12	22.46	22.32	24.08	30
	RB1#50	22.02	22.27	22.35		
	RB1#99	21.91	22.36	22.23		
	RB50#0	21.84	22.33	21.95		
	RB50#50	21.79	22.2	22.29		
	RB100#0	21.75	21.87	21.94		
Note: EIRP=Conducted Power(dBm) - Cable loss(dB) + Antenna Gain(dBi)						
					Result:	**Pass**

4.17 Radiated Spurious Emissions

Serial Number:	2DS1-6	Test Date:	2024/1/4~2024/1/5
Test Site:	996-1/966-2	Test Mode:	Transmitting
Tester:	Vic Du, Mack Huang	Test Result:	Pass

Environmental Conditions:					
Temperature: (℃)	24.2~26.1	Relative Humidity: (%)	43~63	ATM Pressure: (kPa)	101.4~101.5

Test Equipment List and Details:

Manufacturer	Description	Model	Serial Number	Calibration Date	Calibration Due Date
Sunol Sciences	Antenna	JB6	A082520-5	2023/12/1	2026/11/30
R&S	EMI Test Receiver	ESR3	102724	2023/3/31	2024/3/30
TIMES MICROWAVE	Coaxial Cable	LMR-600-UltraFlex	C-0470-02	2023/7/16	2024/7/15
TIMES MICROWAVE	Coaxial Cable	LMR-600-UltraFlex	C-0780-01	2023/7/16	2024/7/15
Sonoma	Amplifier	310N	186165	2023/7/16	2024/7/15
EMCO	Adjustable Dipole Antenna	3121C	9109-756	N/A	N/A
AH	Double Ridge Guide Horn Antenna	SAS-571	1394	2023/2/22	2026/2/21
R&S	Spectrum Analyzer	FSV40	101591	2023/3/31	2024/3/30
MICRO-COAX	Coaxial Cable	UFA210A-1-1200-70U300	217423-008	2023/8/6	2024/8/5
MICRO-COAX	Coaxial Cable	UFA210A-1-2362-300300	235780-001	2023/8/6	2024/8/5
Mini	Pre-amplifier	ZVA-183-S+	5969001149	2023/11/8	2024/11/7
AH	Double Ridge Guide Horn Antenna	SAS-571	1396	2021/10/18	2024/10/17
MICRO-COAX	Coaxial Cable	UFA210B-0-0720-300300	99G1448	2023/7/16	2024/7/15
Agilent	Signal Generator	E8247C	MY43321352	2023/11/17	2024/11/16
PASTERNACK	Horn Antenna	PE9852/2F-20	112002	2021/2/5	2024/2/4
PASTERNACK	Horn Antenna	PE9852/2F-20	112001	2021/2/5	2024/2/4
Quinstar	Preamplifier	QLW-18405536-JO	15964001005	2023/9/15	2024/9/14
PASTERNACK	Horn Antenna	PE9850/2F-20	072001	2021/2/5	2024/2/4
PASTERNACK	Horn Antenna	PE9850/2F-20	072002	2021/2/5	2024/2/4
MICRO-COAX	Coaxial Cable	UFB142A-1-2362-200200	235772-001	2023/8/6	2024/8/5

**** Statement of Traceability:*** *China Certification ICT Co., Ltd (Dongguan) attests that all calibrations have been performed, traceable to National Primary Standards and International System of Units (SI).*

Test Data:
Please refer to the below table and plots.
After pre-scan in the X, Y and Z axes of orientation, the worst case is below:

Cellular Band (PART 22H)

30 MHz-10 GHz:

Frequency (MHz)	Polar (H/V)	Receiver Reading (dBμV)	Substituted Method			Absolute Level (dBm)	Limit (dBm)	Margin (dB)
			Substituted Level (dBm)	Antenna Gain (dBd/dBi)	Cable Loss (dB)			
GSM 850 Frequency:824.2MHz								
716.81	H	22.23	-50.75	0.00	0.50	-51.25	-13.00	38.25
636.32	V	21.24	-49.83	0.00	0.52	-50.35	-13.00	37.35
1648.400	H	75.01	-29.32	8.68	0.80	-21.44	-13.00	8.44
1648.400	V	70.26	-34.15	8.68	0.80	-26.27	-13.00	13.27
2472.600	H	62.54	-38.24	9.38	1.00	-29.86	-13.00	16.86
2472.600	V	64.24	-36.49	9.38	1.00	-28.11	-13.00	15.11
3296.800	H	54.40	-42.28	10.32	1.15	-33.11	-13.00	20.11
3296.800	V	56.68	-39.76	10.32	1.15	-30.59	-13.00	17.59
GSM 850 Frequency:836.6MHz								
437.41	H	21.20	-55.91	0.00	0.41	-56.32	-13.00	43.32
881.38	V	21.32	-45.11	0.00	0.59	-45.70	-13.00	32.70
1673.200	H	73.99	-30.32	8.71	0.85	-22.46	-13.00	9.46
1673.200	V	67.11	-37.30	8.71	0.85	-29.44	-13.00	16.44
2509.800	H	65.93	-34.68	9.42	1.01	-26.27	-13.00	13.27
2509.800	V	61.52	-39.10	9.42	1.01	-30.69	-13.00	17.69
3346.400	H	57.76	-39.41	10.34	1.16	-30.23	-13.00	17.23
3346.400	V	55.06	-41.97	10.34	1.16	-32.79	-13.00	19.79
GSM 850 Frequency:848.8MHz								
645.30	H	21.04	-52.58	0.00	0.52	-53.10	-13.00	40.10
721.85	V	20.76	-48.68	0.00	0.50	-49.18	-13.00	36.18
1697.600	H	75.65	-28.64	8.74	0.90	-20.80	-13.00	7.80
1697.600	V	70.24	-34.18	8.74	0.90	-26.34	-13.00	13.34
2546.400	H	61.19	-39.14	9.47	1.01	-30.68	-13.00	17.68
2546.400	V	60.92	-39.36	9.47	1.01	-30.90	-13.00	17.90
3395.200	H	57.45	-40.24	10.36	1.19	-31.07	-13.00	18.07
3395.200	V	57.86	-39.80	10.36	1.19	-30.63	-13.00	17.63

30 MHz-10 GHz:

Frequency (MHz)	Polar (H/V)	Receiver Reading (dBμV)	Substituted Method			Absolute Level (dBm)	Limit (dBm)	Margin (dB)
			Substituted Level (dBm)	Antenna Gain (dBd/dBi)	Cable Loss (dB)			
WCDMA Band 5 Frequency:826.4 MHz								
916.15	H	22.77	-45.60	0.00	0.58	-46.18	-13.00	33.18
813.11	V	21.17	-46.36	0.00	0.55	-46.91	-13.00	33.91
1652.800	H	35.80	-68.53	8.68	0.81	-60.66	-13.00	47.66
1652.800	V	35.91	-68.50	8.68	0.81	-60.63	-13.00	47.63
2479.200	H	36.64	-64.12	9.39	1.01	-55.74	-13.00	42.74
2479.200	V	36.95	-63.78	9.39	1.01	-55.40	-13.00	42.40
3305.600	H	35.92	-60.81	10.32	1.15	-51.64	-13.00	38.64
3305.600	V	35.31	-61.19	10.32	1.15	-52.02	-13.00	39.02
WCDMA Band 5 Frequency:836.6MHz								
915.28	H	22.34	-46.06	0.00	0.57	-46.63	-13.00	33.63
682.49	V	21.12	-49.12	0.00	0.52	-49.64	-13.00	36.64
1673.200	H	37.22	-67.09	8.71	0.85	-59.23	-13.00	46.23
1673.200	V	35.91	-68.50	8.71	0.85	-60.64	-13.00	47.64
2509.800	H	36.09	-64.52	9.42	1.01	-56.11	-13.00	43.11
2509.800	V	37.16	-63.46	9.42	1.01	-55.05	-13.00	42.05
3346.400	H	36.55	-60.62	10.34	1.16	-51.44	-13.00	38.44
3346.400	V	36.49	-60.54	10.34	1.16	-51.36	-13.00	38.36
WCDMA Band 5 Frequency:846.6MHz								
716.88	H	22.64	-50.34	0.00	0.50	-50.84	-13.00	37.84
675.33	V	21.55	-48.82	0.00	0.50	-49.32	-13.00	36.32
1693.200	H	38.07	-66.23	8.73	0.89	-58.39	-13.00	45.39
1693.200	V	36.79	-67.63	8.73	0.89	-59.79	-13.00	46.79
2539.800	H	37.39	-62.99	9.46	1.01	-54.54	-13.00	41.54
2539.800	V	37.41	-62.93	9.46	1.01	-54.48	-13.00	41.48
3386.400	H	37.31	-60.28	10.35	1.18	-51.11	-13.00	38.11
3386.400	V	37.52	-60.02	10.35	1.18	-50.85	-13.00	37.85

PCS Band (PART 24E)

30 MHz-20 GHz:

Frequency (MHz)	Polar (H/V)	Receiver Reading (dBμV)	Substituted Method			Absolute Level (dBm)	Limit (dBm)	Margin (dB)
			Substituted Level (dBm)	Antenna Gain (dBd/dBi)	Cable Loss (dB)			
GSM 1900 Frequency:1850.2MHz								
183.84	H	48.14	-64.43	0.00	0.25	-64.68	-13.00	51.68
183.20	V	45.13	-64.57	0.00	0.25	-64.82	-13.00	51.82
3700.400	H	49.39	-47.93	10.60	1.25	-38.58	-13.00	25.58
3700.400	V	54.63	-42.67	10.60	1.25	-33.32	-13.00	20.32
5550.600	H	51.44	-41.82	11.44	1.49	-31.87	-13.00	18.87
5550.600	V	43.27	-49.83	11.44	1.49	-39.88	-13.00	26.88
GSM 1900 Frequency:1880MHz								
182.26	H	47.95	-64.59	0.00	0.25	-64.84	-13.00	51.84
80.36	V	44.02	-64.59	0.00	0.16	-64.75	-13.00	51.75
3760.000	H	44.97	-51.44	10.66	1.24	-42.02	-13.00	29.02
3760.000	V	52.61	-43.68	10.66	1.24	-34.26	-13.00	21.26
5640.000	H	53.09	-40.36	11.33	1.54	-30.57	-13.00	17.57
5640.000	V	53.17	-40.16	11.33	1.54	-30.37	-13.00	17.37
GSM 1900 Frequency:1909.8MHz								
182.96	H	48.21	-64.34	0.00	0.25	-64.59	-13.00	51.59
80.27	V	44.23	-64.37	0.00	0.16	-64.53	-13.00	51.53
3819.600	H	45.89	-49.97	10.72	1.29	-40.54	-13.00	27.54
3819.600	V	49.93	-45.79	10.72	1.29	-36.36	-13.00	23.36
5729.400	H	51.62	-41.86	11.22	1.59	-32.23	-13.00	19.23
5729.400	V	50.30	-43.06	11.22	1.59	-33.43	-13.00	20.43

30 MHz-20 GHz:

Frequency (MHz)	Polar (H/V)	Receiver Reading (dBμV)	Substituted Method			Absolute Level (dBm)	Limit (dBm)	Margin (dB)
			Substituted Level (dBm)	Antenna Gain (dBd/dBi)	Cable Loss (dB)			
WCDMA Band II, Frequency:1852.4 MHz								
185.14	H	43.86	-68.73	0.00	0.25	-68.98	-13.00	55.98
78.97	V	42.37	-65.59	-0.52	0.16	-66.27	-13.00	53.27
3704.800	H	45.87	-51.39	10.60	1.25	-42.04	-13.00	29.04
3704.800	V	47.64	-49.59	10.60	1.25	-40.24	-13.00	27.24
5557.200	H	45.13	-48.15	11.43	1.49	-38.21	-13.00	25.21
5557.200	V	42.17	-50.96	11.43	1.49	-41.02	-13.00	28.02
WCDMA Band II, Frequency:1880 MHz								
187.75	H	41.25	-71.40	0.00	0.26	-71.66	-13.00	58.66
75.98	V	42.74	-63.44	-2.01	0.16	-65.61	-13.00	52.61
3760.000	H	43.84	-52.57	10.66	1.24	-43.15	-13.00	30.15
3760.000	V	46.26	-50.03	10.66	1.24	-40.61	-13.00	27.61
5640.000	H	39.13	-54.32	11.33	1.54	-44.53	-13.00	31.53
5640.000	V	42.00	-51.33	11.33	1.54	-41.54	-13.00	28.54
WCDMA Band II, Frequency:1907.6MHz								
181.92	H	41.79	-70.74	0.00	0.25	-70.99	-13.00	57.99
48.19	V	42.51	-56.94	-16.67	0.12	-73.73	-13.00	60.73
3815.200	H	40.19	-55.66	10.72	1.29	-46.23	-13.00	33.23
3815.200	V	45.41	-50.28	10.72	1.29	-40.85	-13.00	27.85
5722.800	H	38.53	-54.96	11.23	1.58	-45.31	-13.00	32.31
5722.800	V	39.17	-54.18	11.23	1.58	-44.53	-13.00	31.53

30 MHz-20 GHz:

Frequency (MHz)	Polar (H/V)	Receiver Reading (dBμV)	Substituted Method			Absolute Level (dBm)	Limit (dBm)	Margin (dB)
			Substituted Level (dBm)	Antenna Gain (dBd/dBi)	Cable Loss (dB)			
WCDMA Band IV, Frequency:1712.4 MHz								
183.84	H	46.54	-66.03	0.00	0.25	-66.28	-13.00	53.28
47.99	V	42.42	-56.83	-16.87	0.12	-73.82	-13.00	60.82
3424.800	H	44.34	-53.43	10.37	1.17	-44.23	-13.00	31.23
3424.800	V	45.39	-52.35	10.37	1.17	-43.15	-13.00	30.15
5137.200	H	37.91	-55.71	11.28	1.46	-45.89	-13.00	32.89
5137.200	V	37.58	-55.92	11.28	1.46	-46.10	-13.00	33.10
WCDMA Band IV, Frequency:1732.6 MHz								
184.49	H	46.67	-65.91	0.00	0.25	-66.16	-13.00	53.16
48.33	V	42.72	-56.86	-16.54	0.12	-73.52	-13.00	60.52
3465.200	H	47.01	-50.80	10.39	1.15	-41.56	-13.00	28.56
3465.200	V	48.86	-48.91	10.39	1.15	-39.67	-13.00	26.67
5197.800	H	38.59	-55.54	11.32	1.44	-45.66	-13.00	32.66
5197.800	V	37.12	-56.86	11.32	1.44	-46.98	-13.00	33.98
WCDMA Band IV, Frequency:1752.6MHz								
183.20	H	45.65	-66.90	0.00	0.25	-67.15	-13.00	54.15
47.66	V	42.74	-56.18	-17.19	0.12	-73.49	-13.00	60.49
3505.200	H	44.04	-53.79	10.41	1.18	-44.56	-13.00	31.56
3505.200	V	46.50	-51.27	10.41	1.18	-42.04	-13.00	29.04
5257.800	H	35.67	-58.06	11.35	1.47	-48.18	-13.00	35.18
5257.800	V	35.85	-57.66	11.35	1.47	-47.78	-13.00	34.78

LTE Bands:
(The Worst modulation and bandwidth was below)

LTE Band 2 (30MHz-20GHz):

Frequency (MHz)	Polar (H/V)	Receiver Reading (dBµV)	Substituted Method			Absolute Level (dBm)	Limit (dBm)	Margin (dB)
			Substituted Level (dBm)	Antenna Gain (dBd/dBi)	Cable Loss (dB)			
1.4MHz, QPSK,Frequency:1850.7 MHz								
250.30	H	37.36	-74.53	0.00	0.30	-74.83	-13.00	61.83
48.16	V	37.41	-62.01	-16.70	0.12	-78.83	-13.00	65.83
3701.400	H	45.33	-51.98	10.60	1.25	-42.63	-13.00	29.63
3701.400	V	45.82	-51.47	10.60	1.25	-42.12	-13.00	29.12
5552.100	H	37.64	-55.63	11.44	1.49	-45.68	-13.00	32.68
5552.100	V	38.53	-54.57	11.44	1.49	-44.62	-13.00	31.62
1.4MHz, QPSK,Frequency:1880 MHz								
184.55	H	37.81	-74.77	0.00	0.25	-75.02	-13.00	62.02
77.59	V	36.96	-70.18	-1.20	0.16	-71.54	-13.00	58.54
3760.000	H	41.54	-54.87	10.66	1.24	-45.45	-13.00	32.45
3760.000	V	46.46	-49.83	10.66	1.24	-40.41	-13.00	27.41
5640.000	H	38.99	-54.46	11.33	1.54	-44.67	-13.00	31.67
5640.000	V	39.43	-53.90	11.33	1.54	-44.11	-13.00	31.11
1.4MHz, QPSK,Frequency:1909.3 MHz								
237.00	H	37.06	-75.10	0.00	0.29	-75.39	-13.00	62.39
49.01	V	36.91	-63.34	-15.87	0.12	-79.33	-13.00	66.33
3818.600	H	39.24	-56.62	10.72	1.29	-47.19	-13.00	34.19
3818.600	V	43.21	-52.50	10.72	1.29	-43.07	-13.00	30.07
5727.900	H	37.59	-55.89	11.23	1.59	-46.25	-13.00	33.25
5727.900	V	38.47	-54.89	11.23	1.59	-45.25	-13.00	32.25

LTE Band 4 (30MHz-20GHz):

Frequency (MHz)	Polar (H/V)	Receiver Reading (dBµV)	Substituted Method			Absolute Level (dBm)	Limit (dBm)	Margin (dB)
			Substituted Level (dBm)	Antenna Gain (dBd/dBi)	Cable Loss (dB)			
1.4MHz, QPSK,Frequency:1710.7 MHz								
248.56	H	37.19	-74.74	0.00	0.30	-75.04	-13.00	62.04
170.19	V	37.68	-71.40	0.00	0.24	-71.64	-13.00	58.64
3421.400	H	46.98	-50.78	10.37	1.17	-41.58	-13.00	28.58
3421.400	V	46.92	-50.81	10.37	1.17	-41.61	-13.00	28.61
5132.100	H	36.92	-56.65	11.28	1.47	-46.84	-13.00	33.84
5132.100	V	36.54	-56.92	11.28	1.47	-47.11	-13.00	34.11
1.4MHz, QPSK,Frequency:1732.5 MHz								
252.95	H	36.80	-75.03	0.00	0.30	-75.33	-13.00	62.33
73.94	V	37.31	-67.65	-3.03	0.16	-70.84	-13.00	57.84
3465.000	H	49.14	-48.67	10.39	1.15	-39.43	-13.00	26.43
3465.000	V	50.37	-47.40	10.39	1.15	-38.16	-13.00	25.16
5197.500	H	36.55	-57.58	11.32	1.44	-47.70	-13.00	34.70
5197.500	V	36.29	-57.69	11.32	1.44	-47.81	-13.00	34.81
1.4MHz, QPSK,Frequency:1754.3MHz								
181.98	H	37.16	-75.37	0.00	0.25	-75.62	-13.00	62.62
172.60	V	37.32	-71.93	0.00	0.24	-72.17	-13.00	59.17
3508.600	H	45.96	-51.86	10.41	1.19	-42.64	-13.00	29.64
3508.600	V	48.47	-49.29	10.41	1.19	-40.07	-13.00	27.07
5262.900	H	35.61	-58.09	11.36	1.47	-48.20	-13.00	35.20
5262.900	V	34.95	-58.52	11.36	1.47	-48.63	-13.00	35.63

LTE Band 5(30MHz-10GHz):

Frequency (MHz)	Polar (H/V)	Receiver Reading (dBµV)	Substituted Method			Absolute Level (dBm)	Limit (dBm)	Margin (dB)
			Substituted Level (dBm)	Antenna Gain (dBd/dBi)	Cable Loss (dB)			
1.4MHz, QPSK, Frequency: 824.7 MHz								
716.68	H	22.04	-50.94	0.00	0.50	-51.44	-13.00	38.44
711.67	V	21.33	-48.34	0.00	0.51	-48.85	-13.00	35.85
1649.400	H	60.01	-44.32	8.68	0.80	-36.44	-13.00	23.44
1649.400	V	49.06	-55.35	8.68	0.80	-47.47	-13.00	34.47
2474.100	H	60.35	-40.43	9.38	1.00	-32.05	-13.00	19.05
2474.100	V	55.57	-45.16	9.38	1.00	-36.78	-13.00	23.78
3298.800	H	48.92	-47.76	10.32	1.15	-38.59	-13.00	25.59
3298.800	V	47.82	-48.62	10.32	1.15	-39.45	-13.00	26.45
1.4MHz, QPSK, Frequency: 836.5 MHz								
951.82	H	22.45	-45.05	0.00	0.59	-45.64	-13.00	32.64
629.55	V	21.59	-49.61	0.00	0.48	-50.09	-13.00	37.09
1673.000	H	59.77	-44.54	8.71	0.85	-36.68	-13.00	23.68
1673.000	V	49.90	-54.51	8.71	0.85	-46.65	-13.00	33.65
2509.500	H	60.09	-40.52	9.42	1.01	-32.11	-13.00	19.11
2509.500	V	58.46	-42.16	9.42	1.01	-33.75	-13.00	20.75
3346.000	H	47.99	-49.17	10.34	1.16	-39.99	-13.00	26.99
3346.000	V	50.44	-46.58	10.34	1.16	-37.40	-13.00	24.40
1.4MHz, QPSK, Frequency: 848.3 MHz								
830.28	H	22.49	-48.04	0.00	0.63	-48.67	-13.00	35.67
642.93	V	21.38	-49.57	0.00	0.52	-50.09	-13.00	37.09
1696.600	H	56.76	-47.53	8.74	0.89	-39.68	-13.00	26.68
1696.600	V	51.97	-52.45	8.74	0.89	-44.60	-13.00	31.60
2544.900	H	57.03	-43.31	9.47	1.01	-34.85	-13.00	21.85
2544.900	V	56.39	-43.91	9.47	1.01	-35.45	-13.00	22.45
3393.200	H	52.27	-45.40	10.36	1.19	-36.23	-13.00	23.23
3393.200	V	50.76	-46.87	10.36	1.19	-37.70	-13.00	24.70

LTE Band 7 (30MHz-26 GHz):

Frequency (MHz)	Polar (H/V)	Receiver Reading (dBµV)	Substituted Method			Absolute Level (dBm)	Limit (dBm)	Margin (dB)
			Substituted Level (dBm)	Antenna Gain (dBd/dBi)	Cable Loss (dB)			
5MHz, QPSK, Frequency: 2502.5 MHz								
170.20	H	37.67	-74.38	0.00	0.24	-74.62	-25.00	49.62
378.58	V	37.22	-69.55	0.00	0.38	-69.93	-25.00	44.93
5005.000	H	43.81	-49.15	11.20	1.47	-39.42	-25.00	14.42
5005.000	V	45.68	-47.14	11.20	1.47	-37.41	-25.00	12.41
7507.500	H	40.58	-49.21	10.90	1.95	-40.26	-25.00	15.26
7507.500	V	41.04	-49.25	10.90	1.95	-40.30	-25.00	15.30
5MHz, QPSK, Frequency:2535 MHz								
72.34	H	37.86	-67.32	-3.83	0.15	-71.30	-25.00	46.30
382.58	V	36.89	-69.77	0.00	0.38	-70.15	-25.00	45.15
5070.000	H	49.10	-44.09	11.24	1.47	-34.32	-25.00	9.32
5070.000	V	49.92	-43.17	11.24	1.47	-33.40	-25.00	8.40
7605.000	H	39.17	-50.30	10.88	2.01	-41.43	-25.00	16.43
7605.000	V	39.75	-50.44	10.88	2.01	-41.57	-25.00	16.57
5MHz, QPSK, Frequency: 2567.5 MHz								
181.92	H	36.77	-75.76	0.00	0.25	-76.01	-25.00	51.01
57.59	V	37.13	-67.73	-11.41	0.14	-79.28	-25.00	54.28
5135.000	H	47.51	-46.09	11.28	1.47	-36.28	-25.00	11.28
5135.000	V	49.76	-43.73	11.28	1.47	-33.92	-25.00	8.92
7702.500	H	38.10	-51.42	10.86	1.97	-42.53	-25.00	17.53
7702.500	V	38.90	-51.28	10.86	1.97	-42.39	-25.00	17.39

LTE Band 12 (30MHz-10GHz):

Frequency (MHz)	Polar (H/V)	Receiver Reading (dBµV)	Substituted Method			Absolute Level (dBm)	Limit (dBm)	Margin (dB)
			Substituted Level (dBm)	Antenna Gain (dBd/dBi)	Cable Loss (dB)			
QPSK, 1.4MHz, Frequency: 699.7 MHz								
948.76	H	22.15	-45.43	0.00	0.58	-46.01	-13.00	33.01
636.13	V	21.14	-49.94	0.00	0.52	-50.46	-13.00	37.46
1399.400	H	47.27	-56.43	8.22	0.71	-48.92	-13.00	35.92
1399.400	V	50.85	-52.90	8.22	0.71	-45.39	-13.00	32.39
2099.100	H	39.72	-62.16	9.16	0.91	-53.91	-13.00	40.91
2099.100	V	36.95	-64.88	9.16	0.91	-56.63	-13.00	43.63
2798.800	H	45.19	-54.74	9.88	1.04	-45.90	-13.00	32.90
2798.800	V	50.34	-49.46	9.88	1.04	-40.62	-13.00	27.62
QPSK, 1.4MHz, Frequency:707.5 MHz								
714.38	H	22.85	-50.18	0.00	0.50	-50.68	-13.00	37.68
699.24	V	21.50	-48.43	0.00	0.55	-48.98	-13.00	35.98
1415.000	H	47.06	-56.61	8.26	0.72	-49.07	-13.00	36.07
1415.000	V	50.44	-53.28	8.26	0.72	-45.74	-13.00	32.74
2122.500	H	38.47	-63.52	9.17	0.92	-55.27	-13.00	42.27
2122.500	V	38.68	-63.29	9.17	0.92	-55.04	-13.00	42.04
2830.000	H	42.75	-57.05	9.93	1.06	-48.18	-13.00	35.18
2830.000	V	46.76	-52.97	9.93	1.06	-44.10	-13.00	31.10
QPSK, 1.4MHz, Frequency: 715.3 MHz								
629.74	H	22.01	-51.69	0.00	0.48	-52.17	-13.00	39.17
551.03	V	21.13	-50.53	0.00	0.47	-51.00	-13.00	38.00
1430.600	H	45.58	-58.05	8.31	0.73	-50.47	-13.00	37.47
1430.600	V	41.15	-62.54	8.31	0.73	-54.96	-13.00	41.96
2145.900	H	41.11	-60.99	9.19	0.93	-52.73	-13.00	39.73
2145.900	V	36.72	-65.39	9.19	0.93	-57.13	-13.00	44.13
2861.200	H	45.34	-54.31	9.98	1.07	-45.40	-13.00	32.40
2861.200	V	50.47	-49.20	9.98	1.07	-40.29	-13.00	27.29

LTE Band 13 (30MHz-10GHz):

Frequency (MHz)	Polar (H/V)	Receiver Reading (dBµV)	Substituted Method			Absolute Level (dBm)	Limit (dBm)	Margin (dB)
			Substituted Level (dBm)	Antenna Gain (dBd/dBi)	Cable Loss (dB)			
QPSK, 5MHz, Frequency: 779.5 MHz								
903.31	H	22.16	-46.53	0.00	0.58	-47.11	-13.00	34.11
665.80	V	21.17	-49.37	0.00	0.50	-49.87	-13.00	36.87
1559.000	H	63.83	-40.16	8.57	0.80	-32.39	-13.00	19.39
1559.000	V	54.33	-49.72	8.57	0.80	-41.95	-13.00	28.95
2338.500	H	49.26	-52.33	9.30	0.97	-44.00	-13.00	31.00
2338.500	V	46.32	-55.04	9.30	0.97	-46.71	-13.00	33.71
3118.000	H	39.22	-58.27	10.25	1.13	-49.15	-13.00	36.15
3118.000	V	38.50	-58.85	10.25	1.13	-49.73	-13.00	36.73
QPSK, 5MHz, Frequency:784.5 MHz								
636.36	H	22.68	-50.98	0.00	0.52	-51.50	-13.00	38.50
721.67	V	20.91	-48.54	0.00	0.50	-49.04	-13.00	36.04
1569.000	H	63.09	-40.99	8.58	0.81	-33.22	-13.00	20.22
1569.000	V	52.73	-51.40	8.58	0.81	-43.63	-13.00	30.63
2353.500	H	48.61	-52.84	9.31	0.97	-44.50	-13.00	31.50
2353.500	V	46.44	-54.78	9.31	0.97	-46.44	-13.00	33.44
3138.000	H	40.19	-57.21	10.26	1.14	-48.09	-13.00	35.09
3138.000	V	38.75	-58.48	10.26	1.14	-49.36	-13.00	36.36

LTE Band 17 (30MHz-10GHz):

Frequency (MHz)	Polar (H/V)	Receiver Reading (dBµV)	Substituted Method			Absolute Level (dBm)	Limit (dBm)	Margin (dB)
			Substituted Level (dBm)	Antenna Gain (dBd/dBi)	Cable Loss (dB)			
5MHz, QPSK, Frequency: 706.5 MHz								
682.60	H	22.65	-50.76	0.00	0.53	-51.29	-13.00	38.29
505.00	V	21.04	-50.55	0.00	0.45	-51.00	-13.00	38.00
1413.000	H	42.16	-61.51	8.26	0.72	-53.97	-13.00	40.97
1413.000	V	43.52	-60.20	8.26	0.72	-52.66	-13.00	39.66
2119.500	H	36.81	-65.16	9.17	0.92	-56.91	-13.00	43.91
2119.500	V	36.66	-65.29	9.17	0.92	-57.04	-13.00	44.04
2826.000	H	40.41	-59.40	9.92	1.06	-50.54	-13.00	37.54
2826.000	V	41.91	-57.83	9.92	1.06	-48.97	-13.00	35.97
5MHz, QPSK, Frequency:710 MHz								
578.98	H	22.64	-51.63	0.00	0.46	-52.09	-13.00	39.09
704.40	V	21.65	-48.17	0.00	0.55	-48.72	-13.00	35.72
1420.000	H	40.60	-63.06	8.28	0.73	-55.51	-13.00	42.51
1420.000	V	47.89	-55.82	8.28	0.73	-48.27	-13.00	35.27
2130.000	H	39.24	-62.78	9.18	0.92	-54.52	-13.00	41.52
2130.000	V	37.91	-64.10	9.18	0.92	-55.84	-13.00	42.84
2840.000	H	41.49	-58.26	9.94	1.06	-49.38	-13.00	36.38
2840.000	V	46.50	-53.21	9.94	1.06	-44.33	-13.00	31.33
5MHz, QPSK, Frequency: 713.5 MHz								
982.62	H	22.51	-44.24	0.00	0.64	-44.88	-13.00	31.88
566.88	V	21.67	-50.01	0.00	0.46	-50.47	-13.00	37.47
1427.000	H	40.57	-63.07	8.30	0.73	-55.50	-13.00	42.50
1427.000	V	45.76	-57.93	8.30	0.73	-50.36	-13.00	37.36
2140.500	H	37.66	-64.41	9.18	0.93	-56.16	-13.00	43.16
2140.500	V	37.17	-64.91	9.18	0.93	-56.66	-13.00	43.66
2854.000	H	40.82	-58.87	9.97	1.07	-49.97	-13.00	36.97
2854.000	V	47.34	-52.34	9.97	1.07	-43.44	-13.00	30.44

LTE Band 25 (30MHz-20GHz):

Frequency (MHz)	Polar (H/V)	Receiver Reading (dBµV)	Substituted Method			Absolute Level (dBm)	Limit (dBm)	Margin (dB)
			Substituted Level (dBm)	Antenna Gain (dBd/dBi)	Cable Loss (dB)			
1.4MHz, QPSK, Frequency: 1850.7 MHz								
247.68	H	34.01	-77.94	0.00	0.30	-78.24	-13.00	65.24
40.56	V	36.37	-54.17	-25.66	0.12	-79.95	-13.00	66.95
3701.400	H	44.26	-53.05	10.60	1.25	-43.70	-13.00	30.70
3701.400	V	48.90	-48.39	10.60	1.25	-39.04	-13.00	26.04
5552.100	H	37.84	-55.43	11.44	1.49	-45.48	-13.00	32.48
5552.100	V	37.69	-55.41	11.44	1.49	-45.46	-13.00	32.46
1.4MHz, QPSK, Frequency:1882.5 MHz								
182.56	H	34.00	-78.54	0.00	0.25	-78.79	-13.00	65.79
170.20	V	35.88	-73.20	0.00	0.24	-73.44	-13.00	60.44
3765.000	H	41.76	-54.57	10.67	1.25	-45.15	-13.00	32.15
3765.000	V	49.04	-47.17	10.67	1.25	-37.75	-13.00	24.75
5647.500	H	38.37	-55.08	11.32	1.55	-45.31	-13.00	32.31
5647.500	V	39.37	-53.96	11.32	1.55	-44.19	-13.00	31.19
1.4MHz, QPSK, Frequency: 1914.3 MHz								
175.00	H	34.98	-77.29	0.00	0.25	-77.54	-13.00	64.54
75.18	V	35.53	-70.17	-2.41	0.16	-72.74	-13.00	59.74
3828.600	H	41.34	-54.56	10.73	1.28	-45.11	-13.00	32.11
3828.600	V	51.02	-44.75	10.73	1.28	-35.30	-13.00	22.30
5742.900	H	39.93	-53.55	11.21	1.60	-43.94	-13.00	30.94
5742.900	V	40.49	-52.87	11.21	1.60	-43.26	-13.00	30.26

LTE Band 26 (30MHz-10GHz):

Frequency (MHz)	Polar (H/V)	Receiver Reading (dBµV)	Substituted Method			Absolute Level (dBm)	Limit (dBm)	Margin (dB)
			Substituted Level (dBm)	Antenna Gain (dBd/dBi)	Cable Loss (dB)			
1.4MHz, QPSK, Frequency: 814.7MHz								
729.36	H	22.05	-50.68	0.00	0.53	-51.21	-13.00	38.21
839.18	V	21.21	-45.90	0.00	0.61	-46.51	-13.00	33.51
1629.400	H	61.28	-43.07	8.66	0.81	-35.22	-13.00	22.22
1629.400	V	47.05	-57.36	8.66	0.81	-49.51	-13.00	36.51
2444.100	H	59.11	-41.78	9.37	1.00	-33.41	-13.00	20.41
2444.100	V	52.94	-47.81	9.37	1.00	-39.44	-13.00	26.44
3258.800	H	48.27	-48.59	10.30	1.17	-39.46	-13.00	26.46
3258.800	V	47.83	-48.78	10.30	1.17	-39.65	-13.00	26.65
1.4MHz, QPSK, Frequency:831.5 MHz								
584.92	H	22.29	-51.87	0.00	0.46	-52.33	-13.00	39.33
692.12	V	21.71	-48.35	0.00	0.54	-48.89	-13.00	35.89
1648.000	H	59.17	-45.16	8.68	0.80	-37.28	-13.00	24.28
1648.000	V	47.80	-56.61	8.68	0.80	-48.73	-13.00	35.73
2472.000	H	58.72	-42.06	9.38	1.00	-33.68	-13.00	20.68
2472.000	V	54.12	-46.61	9.38	1.00	-38.23	-13.00	25.23
3296.000	H	49.85	-46.84	10.32	1.15	-37.67	-13.00	24.67
3296.000	V	49.10	-47.35	10.32	1.15	-38.18	-13.00	25.18
1.4MHz, QPSK, Frequency: 848.3 MHz								
899.96	H	22.63	-46.14	0.00	0.63	-46.77	-13.00	33.77
714.29	V	20.98	-48.63	0.00	0.50	-49.13	-13.00	36.13
1696.600	H	56.10	-48.19	8.74	0.89	-40.34	-13.00	27.34
1696.600	V	51.81	-52.61	8.74	0.89	-44.76	-13.00	31.76
2544.900	H	56.47	-43.87	9.47	1.01	-35.41	-13.00	22.41
2544.900	V	56.27	-44.03	9.47	1.01	-35.57	-13.00	22.57
3393.200	H	52.55	-45.12	10.36	1.19	-35.95	-13.00	22.95
3393.200	V	50.37	-47.26	10.36	1.19	-38.09	-13.00	25.09

LTE Band 41 (30MHz-27GHz):

Frequency (MHz)	Polar (H/V)	Receiver Reading (dBµV)	Substituted Method			Absolute Level (dBm)	Limit (dBm)	Margin (dB)
			Substituted Level (dBm)	Antenna Gain (dBd/dBi)	Cable Loss (dB)			
5MHz, QPSK, Frequency: 2498.5 MHz								
184.49	H	37.90	-74.68	0.00	0.25	-74.93	-25.00	49.93
40.28	V	36.03	-54.15	-26.04	0.11	-80.30	-25.00	55.30
4997.000	H	38.11	-54.83	11.20	1.48	-45.11	-25.00	20.11
4997.000	V	44.51	-48.29	11.20	1.48	-38.57	-25.00	13.57
7495.500	H	40.28	-49.51	10.90	1.94	-40.55	-25.00	15.55
7495.500	V	39.86	-50.43	10.90	1.94	-41.47	-25.00	16.47
5MHz, QPSK, Frequency:2593 MHz								
249.35	H	37.42	-74.49	0.00	0.30	-74.79	-25.00	49.79
63.06	V	35.79	-69.18	-8.68	0.14	-78.00	-25.00	53.00
5186.000	H	43.37	-50.66	11.31	1.44	-40.79	-25.00	15.79
5186.000	V	42.76	-51.13	11.31	1.44	-41.26	-25.00	16.26
7779.000	H	38.27	-51.22	10.84	1.99	-42.37	-25.00	17.37
7779.000	V	38.22	-51.72	10.84	1.99	-42.87	-25.00	17.87
5MHz, QPSK, Frequency: 2687.5 MHz								
380.24	H	37.57	-71.94	0.00	0.38	-72.32	-25.00	47.32
72.04	V	35.15	-68.68	-3.98	0.15	-72.81	-25.00	47.81
5375.000	H	41.51	-52.00	11.43	1.49	-42.06	-25.00	17.06
5375.000	V	45.65	-47.85	11.43	1.49	-37.91	-25.00	12.91
8062.500	H	38.96	-49.26	10.81	2.12	-40.57	-25.00	15.57
8062.500	V	38.16	-50.56	10.81	2.12	-41.87	-25.00	16.87

LTE Band 66(30MHz-20GHz):

Frequency (MHz)	Polar (H/V)	Receiver Reading (dBµV)	Substituted Method			Absolute Level (dBm)	Limit (dBm)	Margin (dB)
			Substituted Level (dBm)	Antenna Gain (dBd/dBi)	Cable Loss (dB)			
1.4MHz, QPSK, Frequency: 1710.7 MHz								
188.41	H	37.84	-74.82	0.00	0.26	-75.08	-13.00	62.08
173.81	V	36.23	-73.11	0.00	0.24	-73.35	-13.00	60.35
3421.400	H	46.26	-51.50	10.37	1.17	-42.30	-13.00	29.30
3421.400	V	47.57	-50.16	10.37	1.17	-40.96	-13.00	27.96
5132.100	H	38.06	-55.51	11.28	1.47	-45.70	-13.00	32.70
5132.100	V	37.48	-55.98	11.28	1.47	-46.17	-13.00	33.17
1.4MHz, QPSK, Frequency:1745 MHz								
182.57	H	36.59	-75.95	0.00	0.25	-76.20	-13.00	63.20
40.42	V	36.17	-54.19	-25.85	0.11	-80.15	-13.00	67.15
3490.000	H	47.07	-50.77	10.40	1.17	-41.54	-13.00	28.54
3490.000	V	49.45	-48.33	10.40	1.17	-39.10	-13.00	26.10
5235.000	H	37.36	-56.54	11.34	1.46	-46.66	-13.00	33.66
5235.000	V	37.27	-56.44	11.34	1.46	-46.56	-13.00	33.56
1.4MHz, QPSK, Frequency: 1779.3 MHz								
170.51	H	37.89	-74.18	0.00	0.24	-74.42	-13.00	61.42
61.11	V	34.54	-71.09	-9.71	0.14	-80.94	-13.00	67.94
3558.600	H	47.95	-49.72	10.46	1.22	-40.48	-13.00	27.48
3558.600	V	50.68	-46.89	10.46	1.22	-37.65	-13.00	24.65
5337.900	H	37.71	-55.76	11.40	1.47	-45.83	-13.00	32.83
5337.900	V	37.06	-56.27	11.40	1.47	-46.34	-13.00	33.34

Note:
1) The unit of Antenna Gain is dBd for frequency below 1GHz, and the unit of Antenna Gain is dBi for frequency above 1GHz.
2) Absolute Level = Substituted Level - Cable loss + Antenna Gain
3) Margin = Limit-Absolute Level

5. EUT PHOTOGRAPHS

Please refer to the attachment CR231167139-EXP EUT EXTERNAL PHOTOGRAPHS and CR231167139-INP EUT INTERNAL PHOTOGRAPHS

6. TEST SETUP PHOTOGRAPHS

Please refer to the attachment CR231167139-00D-TSP TEST SETUP PHOTOGRAPHS.

==== END OF REPORT =====