LTE TDD

Quick Start Guide

Issue 02

Date 2014-04-29

Contents

1 About This Document 1

2 Device Panel 2

3 What You Need 3

4 Requirements 4

5 How It Works 5

6 Set Up the Hardware 6

6.1 Choose a Location 6

6.2 Insert a USIM Card to the SIM Card Slot 6

6.3 LED Behavior 7

6.4 Grounding 8

6.5 Connect the ODU to the IDU 9

6.6 Connect the IDU 10

6.7 Mount the ODU 11

6.7.1 Recommended Scheme 13

7 Connect to the Internet 15

8 Wireless 18

8.1 Turn the Wireless On or Off 18

8.2 Activate WPS 19

9 Make Phone Calls 21

10 Troubleshooting 22

10.1 Power LED 22

10.2 Know RESET Button 23

10.3 LTE LED 23

10.4 WLAN/WPS LED 24

10.5 PHONE LED 24

10.6 ETHERNET 1~2 LEDs 25

1 About This Document

FCC Regulations:

This device complies with part 15 of the FCC Rules. Operation is subject to the following two conditions: (1) This device may not cause harmful interference, and (2) this device must accept any interference received, including interference that may cause undesired operation.

Changes or modifications not expressly approved by the party responsible for compliance could void the user‘s authority to operate the equipment.

****

This equipment has been tested and found to comply with the limits for a Class B digital device, pursuant to part 15 of the FCC Rules. These limits are designed to provide reasonable protection against harmful interference in a residential installation. This equipment generates, uses and can radiate radio frequency energy and, if not installed and used in accordance with the instructions, may cause harmful interference to radio communications. However, there is no guarantee that interference will not occur in a particular installation. If this equipment does cause harmful interference to radio or television reception, which can be determined by turning the equipment off and on, the user is encouraged to try to correct the interference by one or more of the following measures:

—Reorient or relocate the receiving antenna.

—Increase the separation between the equipment and receiver.

—Connect the equipment into an outlet on a circuit different from that to which the receiver is connected.

—Consult the dealer or an experienced radio/TV technician for help.

****

FCC RF Exposure Compliance

This equipment complies with radio frequency (RF) exposure limits adopted by the Federal Communications Commission for an uncontrolled environment. This equipment should be installed and operated with minimum distance 27 cm between the radiator & your body.

2 Device Panel

Figure 2-1 IDU Rear Panel

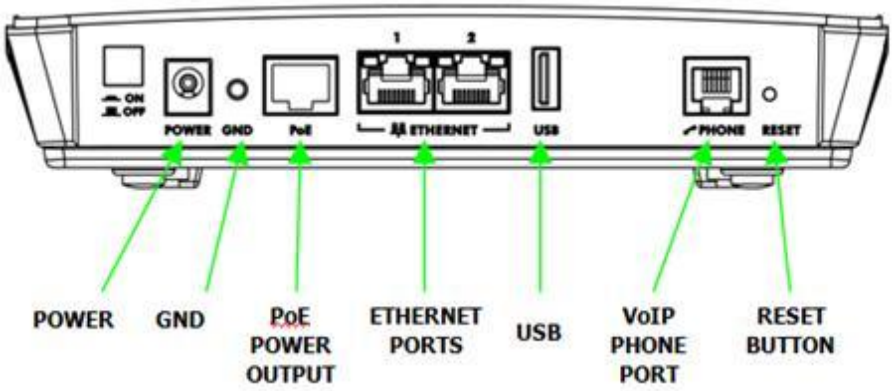

Figure 2-2 IDU Front Panel

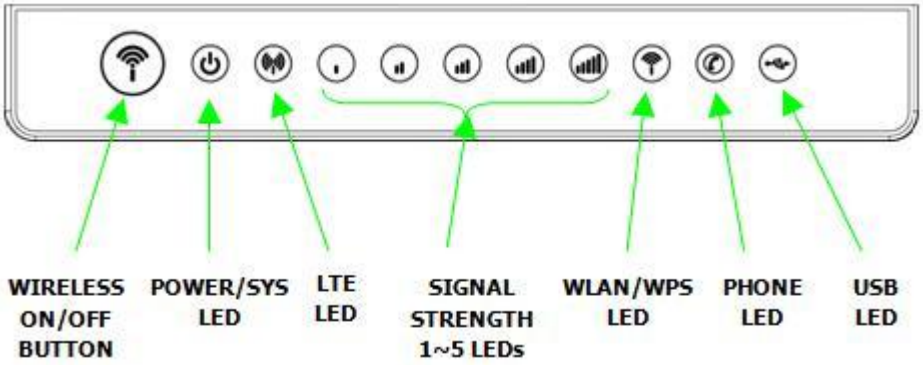

3 What You Need

Ensure that you have everything required to properly set up your device.

The LTE ODU	The LTE IDU	The Quick Start Guide	Power adapter and AC Power Cord
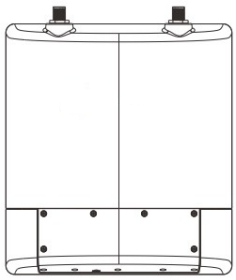	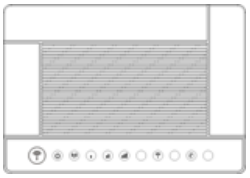	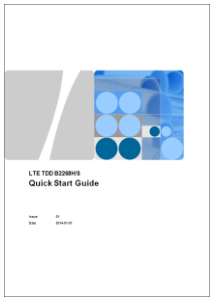	
One 1.8 meter long CAT5 Ethernet cable for connecting the IDU and your computer	Grounding Kit (One M4 Screw, One Ground Cable)	Mounting Kit (Six M6 Nuts, One Pole Bracket, One U Bolt)	One RJ-11 phone cable *(not included)* for connecting the IDU and a phone
		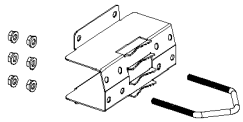	
Another CAT5 8-wire Ethernet cable *(not included)* for connecting the IDU and ODU			

4 Requirements

Make sure you have the following things before you start:

- **INTERNET ACCESS**: You need a USIM card from an LTE ISP (Internet Service Provider). You may also need a PIN code to use the USIM card.
- **VoIP ACCOUNT**: If you wish to make phone calls over the Internet, you need the account information provided by your VoIP service provider (the company that lets you make phone calls over the Internet).
- **WEB BROWSER**: Internet Explorer 6.0 and later versions, with JavaScript enabled, or Mozilla Firefox 3 and later versions, or Safari 2.0 and later versions. The browser will be used to access the Internet and/or access the LTE Device's Web Configurator.

5 How It Works

Figure 5-1 LAN and WAN

1. The outdoor unit (ODU) connects to the LTE network and the indoor unit (IDU).
2. Connects the IDU to your computer/local area network.
3. The IDU also functions as a WiFi access point.
4. The IDU can also be an analog-to-VoIP telephone adapter.

This Quick Start Guide shows you how to set up your outdoor and indoor units in order to access the Internet.

6 Set Up the Hardware

CAUTION

Before you begin, ensure that you are familiar with all safety and accident prevention procedures necessary for working at heights and with electricity.

CAUTION

Do NOT install the ODU during a lightning storm.

6.1 Choose a Location

The ODU can be mounted on a pole or antenna mast or on a wall using the supplied bracket mount.

- Choose a mounting point that is sturdy enough to hold the ODU, even during high winds.
- When choosing a location to install the ODU, remember that the ODU's front panel should point towards your service provider's nearest base station. You do not need to be able to see the base station from the ODU's position. However, if you experience difficulties with signal reception, a Line of Sight (LoS) connection may produce better results.
- It is suggested that you transport the ODU to its intended installation location in its original protective packaging.

6.2 Insert a USIM Card to the SIM Card Slot

CAUTION

Make sure the ODU is turned off before you insert your USIM card. It is recommended to NOT connect the PoE cable before you do this step. Otherwise, the USIM card may be damaged.

Step 1 Twist the SIM card slot's cover counterclockwise to remove it from the ODU.

Step 2 Insert your SIM card.

Figure 6-1 Insert USIM Card

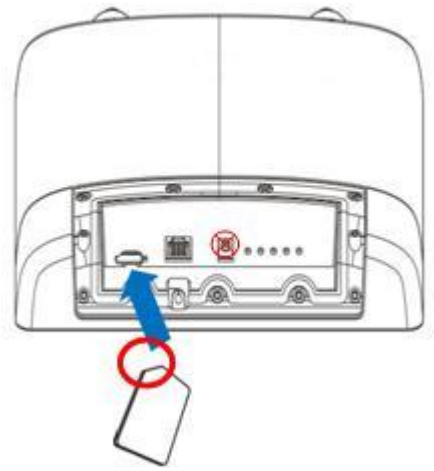

Step 3 Align and put the cover to protect it in the ODU.

----End

6.3 LED Behavior

When set up the CPE, the LED will have the following behavior.

LED name	Location	Color	LED Behavior	Status Indication
Main Power		Blue	Blinking	Power On
Usim Card		Blue	Fixed	USIM card inserted
LTE Search		Green	Blinking	Searching the network
Signal Strength		Green	Fixed	See Table 6-1.

LED name	Location	Color	LED Behavior	Status Indication

Table 6-1 Signal Strength LED Definition

RSRP: dBm SINR: dB	RSRP < -114	-114 <= RSRP< -109	-109 <= RSRP< -104	-104 <= RSRP < -94	-94 <= RSRP < -84	RSRP > = -84
SINR < -2.8	0	1	1	1	1	1
-2.8 <= SINR < 1.2	0	1	2	2	2	2
1.2 <= SINR < 4.8	0	1	2	3	3	3
4.8 <= SINR < 13.2	0	1	2	3	4	4
SINR >= 13.2	0	1	2	3	4	5

6.4 Grounding

Step 1 Use the M4 screw to connect the ground cable to the ground hole on the LTE Device's rear panel as shown.

Figure 6-2 Attach the Ground Cable to the ODU

Step 2 Attach the other endof theground cable to a wallor theground.

Figure 6-3 AttachGround Cable to the Ground

----End

6.5 Connect the ODU to the IDU

Lay a CAT5 Ethernet cable (not included) from your intended IDU location to your intended ODU location.

- The maximum distance of CAT5 cable is limited to 100 m (328 feet).

Signal attenuation may result if you use cable extenders to cover a greater distance.

- If you intend to use cable ties or other methods to secure the cable, do not tighten them yet. Leave the cable loose until after you finish installing the IDU and ODU.

To connect the CAT5 Ethernet cable:

Step 1 Open the cover of ODU by take of the screws on the housing.

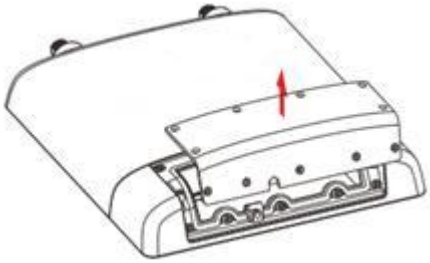

Step 2 Feed the end of the CAT5 Ethernet cable through the rubber, and connect the end of the cable to the ODU.

Figure 6-4 ConnectEthernet Cable to ODU

Step 3 Put the cover on the ODU housing and twist the screw.

----End

6.6 Connect the IDU

Figure 6-5 IDU Hardware Connections

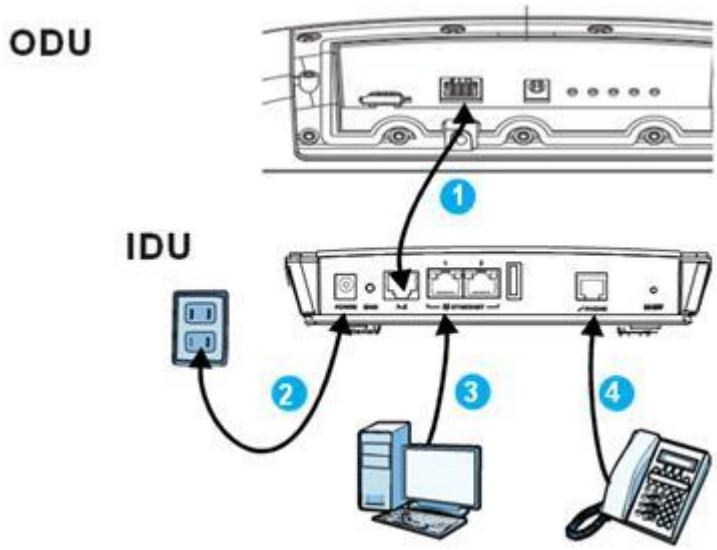

Make sure you have inserted your USIM card into the ODU.

Step 1 Connect the CAT5 Ethernet cable which is already connected to the ODU to the IDU's RJ-45 PoE port.

CAUTION

Do not connect a computer or a switch directly to the IDU's PoE port due to the high PoE power (48V).

Step 2 Connect the supplied power adapter to the IDU. The **POWER** LED shines a steady green once connected.

Step 3 Connect the included Ethernet cable from the computer to one of the IDU's **ETHERNET** ports.

Step 4 Connect an analog phone to the **PHONE** port to use VoIP. The **PHONE** LED should light on.

----End

6.7 Mount the ODU

See the installation instructions that came with your bracket mount for information on mounting the ODU correctly.

CAUTION

To keep rainwater from entering the device, install the ODU vertically with the connectors ointed down.

You can install the LTE Device vertically with a +15, 0, or -15 degree angle relative to the pole. The connectors should be pointed down. The following steps show you how to install it with a 0 degree angle.

Figure 6-6 Installation Angle

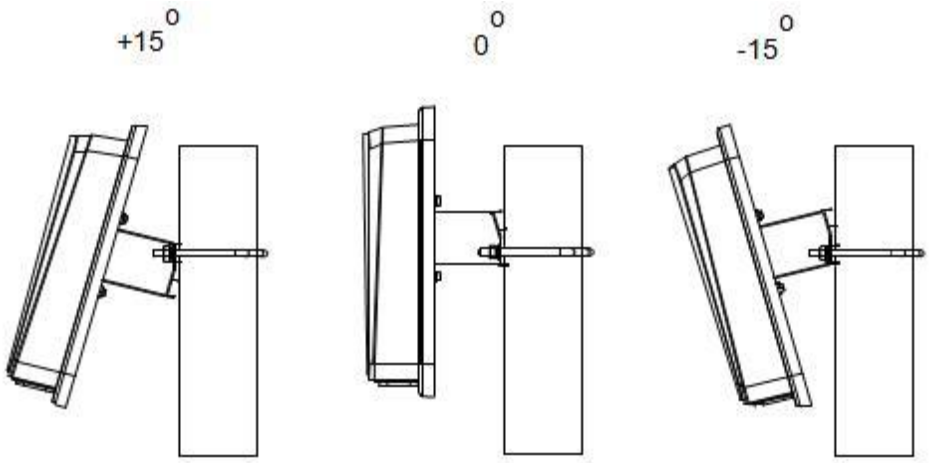

Step 1 For +15° and 0° angle installations, position the bracket with the +15° mark on the top.

- Use the two holes (marked as A) for +15° angle installation.
- Use the two holes (marked as B) for 0° angle installation.

Figure 6-7 Bracketanglemark

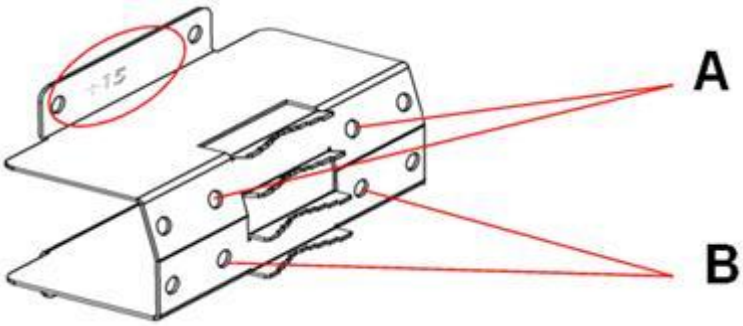

Step 2 Align two M6 nuts to the bottom two holes to attach the pole bracket to the U bolt on a pole or mast. Use a wrench to tighten the nuts with the U bolt.

Figure 6-8 Connect theUBolt

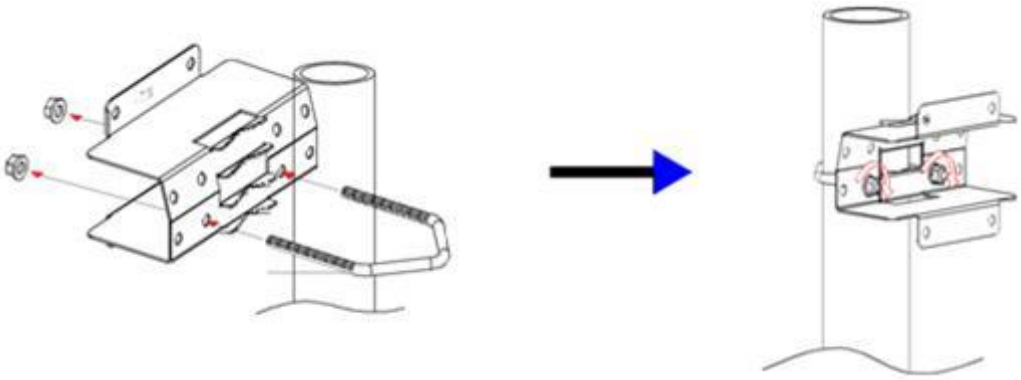

Step 3 Align the four edge holes on the mounting bracket with the screws on the rear of the LTE Device. Then use a wrench to tighten the four nuts with the screws.

Figure 6-9 Attach the ODU to the Bracket

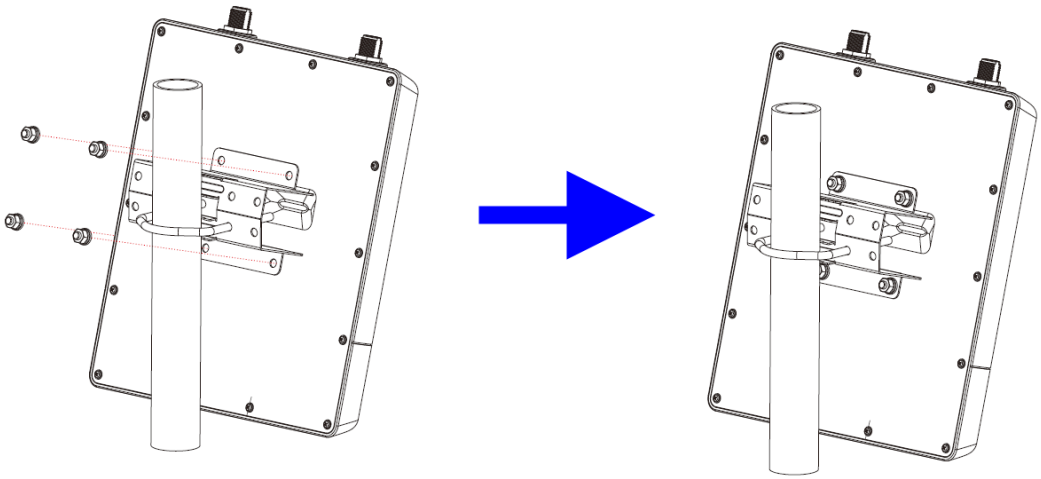

----End

6.7.1 Recommended Scheme

To avoid factitious damage to the equipment and ensure your personal safety and proper use of the product, stick to the following requirements:

- The ODU must be grounded.
- PoE lightning protector should be installed at the ODU side and the building entrance.
- The size of the grounding bar depends on the actual situations. The recommended size is 50 mm x 50 mm x 5 mm.
- The diameter of the pole ranges from 40 mm to 63 mm.
- The building must provide a grounding grid and a ground point for lightning rod and equipment grounding. In additional, the earth resistance must be less than 10 ohm.

- The length of the Pgnd conductor should be less than 1 m.
- The total length of the Ethernet cable between ODU and the IDU should be less than 100 m.
- The ODU should be installed within the protective angle of the lightning rod which is 45 degree as showed below.

CAUTION

The lightning protector is a PoE type, it can be purchased in the open market. The surge current rating of the protector is 300 A, 10/1000us per Bellcore 1089 and 3 kA, 8x20us per IEC 61000-4-5.

Figure 6-10 Lightning Protector

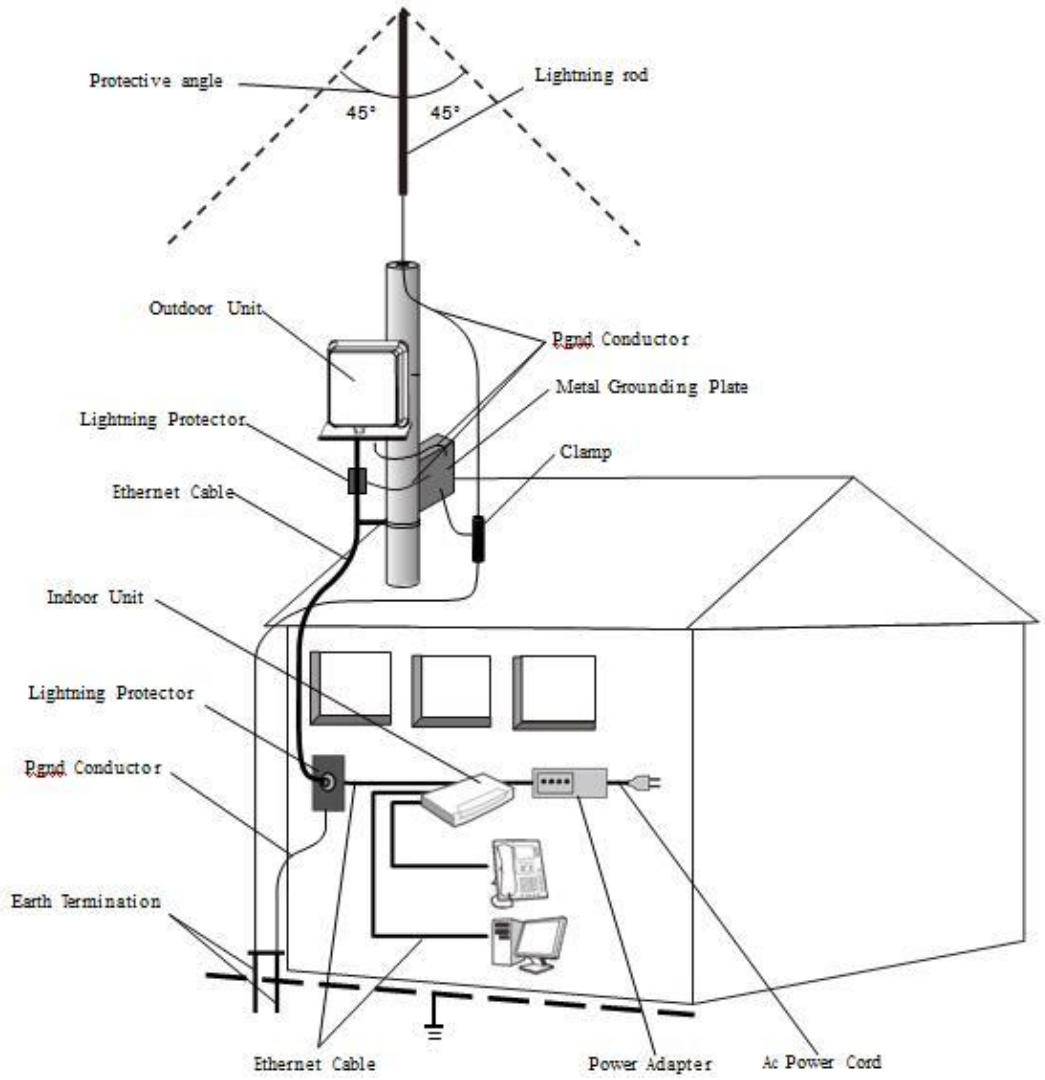

For the lightning rod's installation, please refer to the Quick Start Guide of your lightning rod.

7 Connect to the Internet

Step 1 Open a web browser and go to http://192.168.1.1.

- If your service provider's LTE login page appears instead of your default Home page then all you need to do is enter the login information that you were given and follow the on- screen instructions. The LTE Device (IDU+ODU) should then automatically update itself with the settings that you need to connect to the Internet.
- If your service provider's LTE login page does not appear, do the following:

Step 2 Enter the default **Username** (admin) and **Password** (LTEcpe), and then click **Login**.

Figure 7-1 Login Screen

NOTE

If the login screen does not open, make sure you allow web browser pop-up windows, JavaScript and Java permissions. Your computer should also be set to get an IP address automatically from a DHCP server. See your User's Guide for more information

The main screen displays.

Figure 7-2 Main Screen

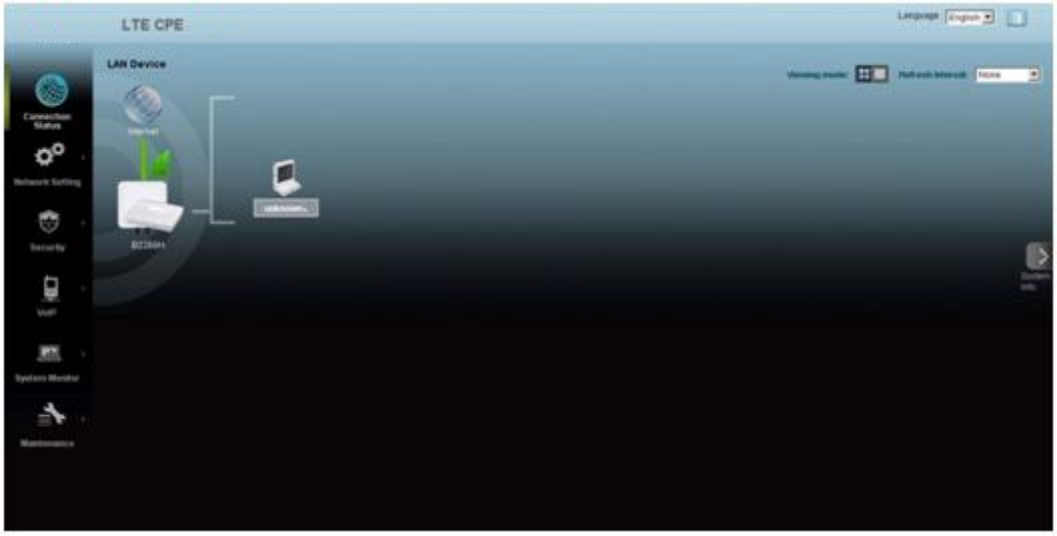

Step 3 If the **INTERNET** light is off, manually configure the Internet connection. Click **Network Setting > Broadband**. If the APN (Access Point Name) is not the same as what you were given, click the **Modify** icon.

Figure 7-3 Network Setting > Broadband

Internet Setup

#	Enabled	Name	APN	IPv6/IPv4 Mode	NAT	Modify
1	Enabled	LTE	Auto APN	IPv4 Only	Enabled	
2	Disabled	LTE2	Auto APN	IPv4 Only	Enabled	

NOTE

This device supports dual APN. If this function needs to be used you can click the Modify icon to enable.

Step 4 Change the APN, IP address server settings if necessary. Click **Apply**.

Figure 7-4 Network Setting > Broadband > Modify

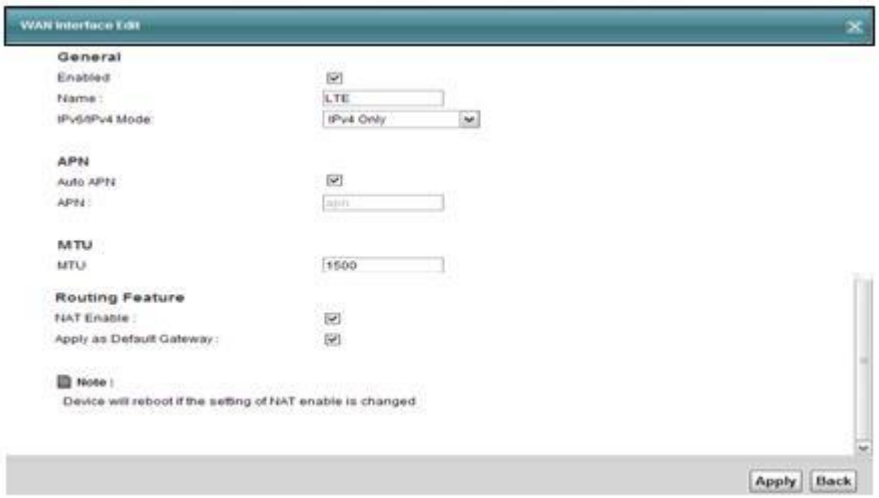

NOTE

The LTE settings should be provided by your Internet service provider.

Step 5 If a PIN code is required, click **Network Setting > Broadband > SIM**.

Enter it and then click **Apply**.

Figure 7-5 Network Setting > Broadband > SIM

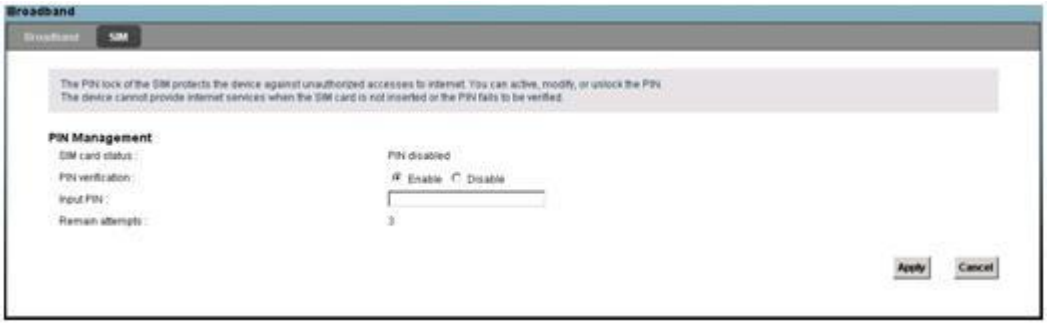

Step 6 Wait for the **INTERNET** light to turn on and then try browsing to a website. If you can see the website, your LTE connection is working properly. For more information, check the **Broadband** section in the User's Guide.

----End

8 Wireless

8.1 Turn the Wireless On or Off

Step 1 Make sure the **PWR/SYS** LED is on (not blinking).

Step 2 Press the **WIRELESS On/Off** button for one second and release it.

----End

The **WLAN/WPS** LED should change from on to off or vice versa.

Alternatively, you can go to **Network Setting > Wireless** in the Web Configurator, select **Enable Wireless LAN**, configure wireless settings and then click **Apply**. See the User's Guide for more information.

Figure 8-1 Network Setting > Wireless

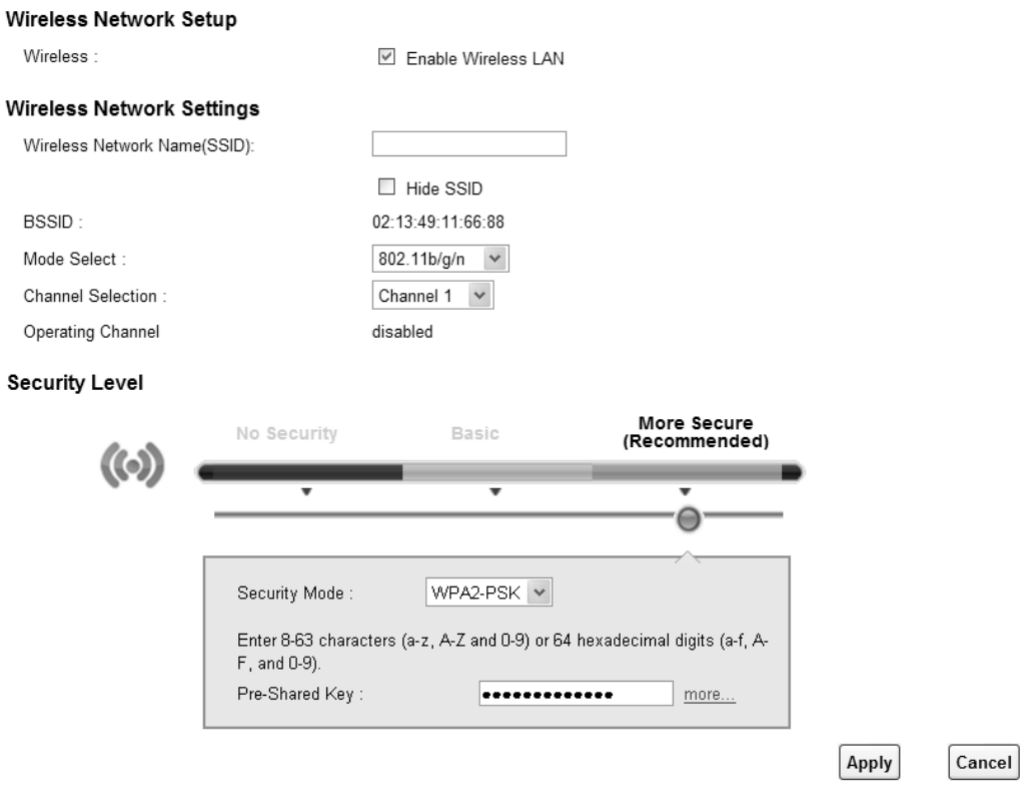

8.2 Activate WPS

You can set up a wireless network with WPS (WiFi Protected Setup) or manually add a client to your wireless network. Activating WPS helps you quickly set up a wireless network with strong security.

Using the physical WPS button:

Step 1 Make sure the **PWR/SYS** LED is on (not blinking).

Step 2 Press the **WIRELESS On/Off** button for more than five seconds and release it. Press the WPS button on another WPS-enabled device within range of the LTE Device. The **WLAN/ WPS** LED flashes while the LTE Device sets up a WPS connection with the wireless device.

----End

NOTE

You must activate WPS in the LTE Device and in another wireless device within two minutes of each other. See your User's Guide for more information.

Using the WPS button in the Web Configurator:

Step 1 Click **Network Setting** > **Wireless** > **WPS**, select **Enable**.

Step 2 Click the WPS button in the **Method 1 PBC** section and click **Apply**.

Figure 8-2 NetworkSetting >Wireless>WPS

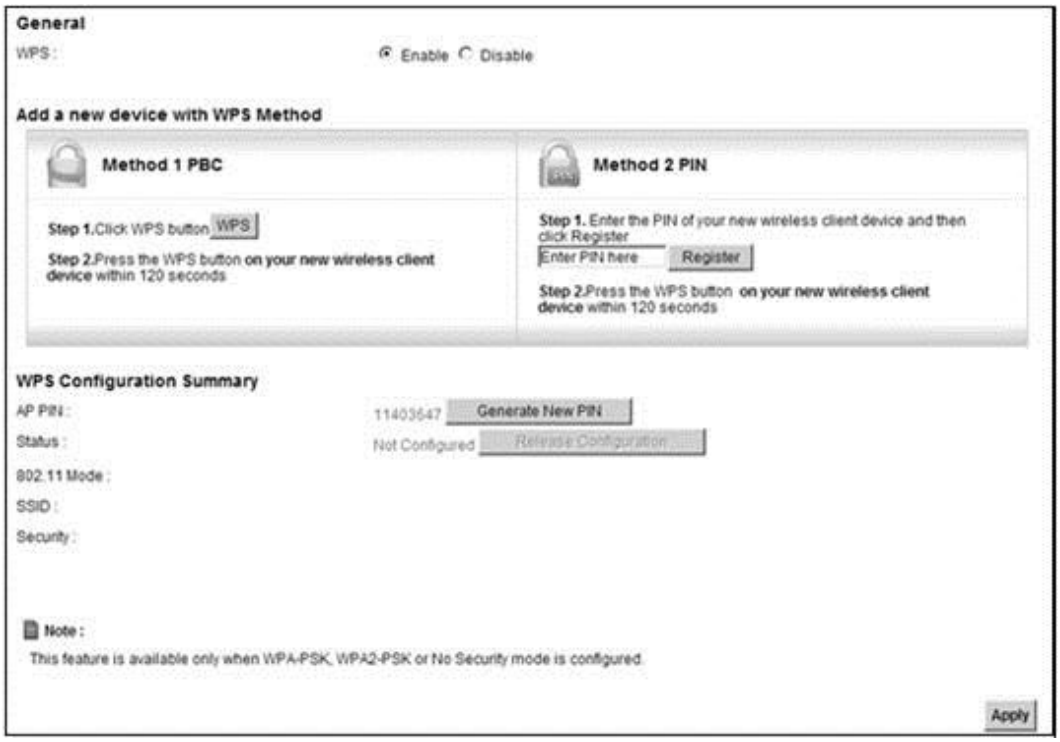

Step 3 Press the WPS button on your WPS-enabled wireless client nearby within 2 minutes.

The **WLAN/WPS** LED should flash while the LTE Device sets up a WPS connection with the wireless device.

NOTE

You must activate WPS in the LTE Device and in another wireless device within two minutes of each other. See your User's Guide for more information.

----End

9 Make Phone Calls

NOTE

The VoIP settings should be provided by your VoIP service provider.

Using a telephone connected to one of the IDU's **PHONE** port, place a call to another phone (either an Internet phone, or a regular PSTN number). If you can call the other number, your VoIP setup is working properly.

Follow these directions to make calls over the Internet.

Step 1 To dial a SIP number, press the numbers on your phone's keypad to make the call.

Step 2 To call regular telephone numbers, use your VoIP service provider's dialing plan.

Step 3 For call forward service, contact your service provider to know if they support this feature.

Step 4 To receive a call through the IDU, the other party must have your SIP number and a SIP account of their own.

----End

10 Troubleshooting

Use this section if you have problems with your LTE Device.

10.1 Power LED

Figure 10-1 PowerLED Symbol

Table 10-1 Power LED Definition

LED	COLOR	STATUS	DESCRIPTION
PWR/SYS	Green	On	The LTE Device is receiving power and ready for use.
		Blinking	The LTE Device is booting up.
	Red	On	The LTE Device detected an error while self-testing, or there is a device malfunction.
		Blinking	The LTE Device is upgrading the firmware.
	Off		The LTE Device is not receiving power.

If the power LED is off, please check:

Step 1 Power adapter MUST be plugged into device.

Step 2 If the problem still persists, device hardware component or power adapter may be defective.

Please contact your local vendor.

----End

10.2 Know RESET Button

Figure 10-2 RESET Button

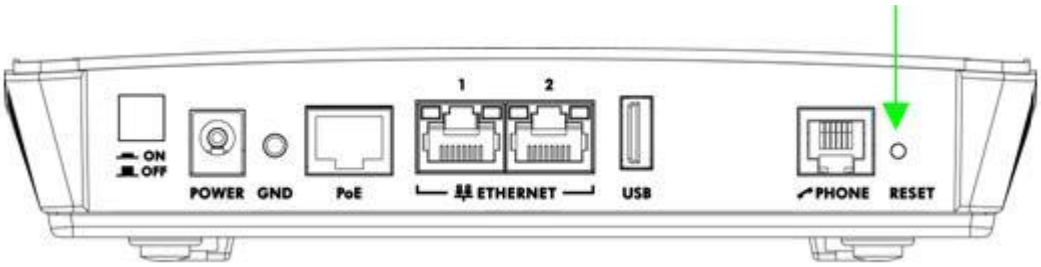

- To reset the device to default, press the RESET button until the power LED begins to blink. Then check the other LEDs.
- Based on the following definitions of the other LEDs, it can diagnose if there's any hardware defect.

10.3 LTE LED

Figure 10-3 LTE LED Symbol

Table 10-2 LTE LED Definition

LED	COLOR	STATUS	DESCRIPTION
LTE	Green	On	The LTE Device has an LTE connection on the WAN.
		Blinking	The LTE Device is searching for a frequency channel or is performing network entry.
	Off		The LTE Device does not have an LTE connection on the WAN.

If the LTE LED is off or blinking continuously, please check:

Step 1 PoE cable MUST be connected between IDU and ODU device.

Step 2 Re-power on the IDU device.

Step 3 You may need to configure your WAN connection. See the Connection to the Internet section of this guide for more information.

Step 4 If the problem still persists, device hardware component may be defective. Please contact your local vendor.

----End

10.4 WLAN/WPS LED

Figure 10-4 WLAN/WPSLED Symbol

Table 10-3 WLAN/WPS LED Definition

LED	COLOR	STATUS	DESCRIPTION
WLAN/ WPS	Green	On	The wireless network is activated and is operating in IEEE 802.11 "b", "g" or "n" mode.
		Blinking	The LTE Device is communicating with other wireless clients.
	Orange	Blinking	The LTE Device is setting up a WPS connection.
	Off		The wireless network is not activated.

If the WLAN/WPS LED is off, please check:

Step 1 WLAN: Enable wireless function and all configuration parameters MUST be correct. See the User's Guide for more information.

Step 2 WPS: You can use the WPS function to set up wireless connections. See the **Activate WPS** section of this guide for more information.

Step 3 If the problem still persists, device hardware component may be defective. Please contact your local vendor.

----End

10.5 PHONE LED

Figure 10-5 PHONE LED Symbol

Table 10-4 PHONE LED Definition

LED	COLOR	STATUS	DESCRIPTION
PHONE	Green	On	A SIP account is registered for the phone port.
		Blinking	A telephone connected to the phone port has its receiver off of the hook or there is an incoming call.
	Orange	On	A SIP account is registered for the phone port and there is a voice message in the corresponding SIP account.
		Blinking	A telephone connected to the phone port has its receiver off of the hook and there is a voice message in the corresponding SIP account.
	Off		The phone port does not have a SIP account registered.

If this LED is off or blinking continuously, please check:

Step 1 The parameters of VoIP configuration MUST be correct. See the User's Guide for more information.

Step 2 Phone cable MUST be connected to analog phone.

Step 3 If the problem still persists, device hardware component may be defective. Please contact your local vendor.

----End

10.6 ETHERNET 1~2 LEDs

Figure 10-6 ETHERNET 1~2LEDs Symbol

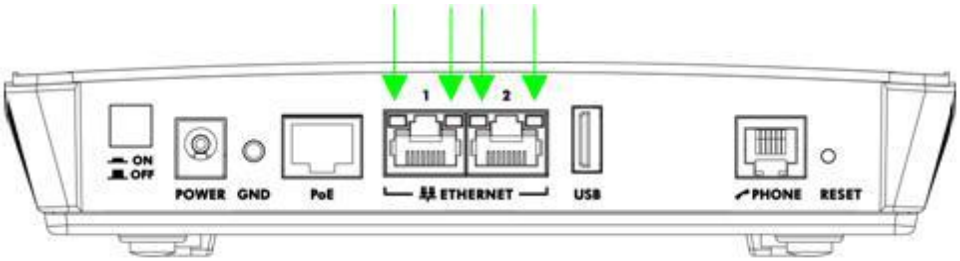

Table 10-5 ETHERNET 1~2 LEDs Definition

LED	COLOR	STATUS	DESCRIPTION

LED	COLOR	STATUS	DESCRIPTION
ETHERNET 1-2	Yellow (Giga Ethernet)	On	The LTE Device has a successful 1000 Mbps Ethernet connection with a device on the Local Area Network (LAN).
		Blinking	The LTE Device is sending or receiving data to/from the LAN at 1000 Mbps.
	Green (Fast Ethernet)	On	The LTE Device has a successful 10/100 Mbps Ethernet connection with a device on the Local Area Network (LAN).
		Blinking	The LTE Device is sending or receiving data to/from the LAN at 10/100 Mbps.
	Off		The LTE Device does not have an Ethernet connection with the LAN.

If the LED is off, please check:

Step 1 The LAN cable MUST be connected between device and PC.

Step 2 NIC function on the PC MUST be enabled.

Step 3 If the problem still persists, device hardware component may be defective. Please contact your local vendor.

----End

I cannot access the IDU from my LAN:

- Check the cable connection between the LTE Device and your computer or switch and ensure that both ends are secure.
- Make sure your computer has gotten an IP address (default is 192.168.1.x) in the same network as the LTE Device's LAN. If not, you can manually configure your computer by clicking **Start > Control Panel > Network Connections > Local Area Connection > Properties > Internet Protocol (TCP/IP)**.
- Ping the LTE Device from a LAN computer: Click **Start > (All) Programs > Accessories > Command Prompt**. When the command prompt window opens, type "ping 192.168.1.1" without quotes and press [ENTER]. The LTE Device should reply.
- Press and hold the **RESET** button for about 10 seconds to reset the device to its default factory settings, then try to connect to the IP 192.168.1.1 once more.

I cannot log into the Web Configurator:

- Check to see if anyone else is currently logged into the LTE Device. If so, you may not be able to log in until they log out first.
- If you've forgotten the LTE Device's user name, password, or IP address press and hold the Reset button for about 10 seconds. The LTE Device returns to the factory default settings listed on the first page of this book.