FCC CFR47 PART 22 SUBPART H
FCC CFR47 PART 24 SUBPART E

CERTIFICATION TEST REPORT

FOR

CDMA Phone

MODEL NUMBER: LG109C

FCC ID: ZNF109C

REPORT NUMBER: 15I20516-E1

ISSUE DATE: MAY 8, 2015

Prepared for
LG ELECTRONICS MOBILECOMM U.S.A., INC
1000 SYLVAN AVENUE
ENGLEWOOD CLIFFS,
NEW JERSEY, 07632, U.S.A

Prepared by
UL VERIFICATION SERVICES INC.
47173 BENICIA STREET
FREMONT, CA 94538, U.S.A.
TEL: (510) 771-1000
FAX: (510) 661-0888

NVLAP LAB CODE 200065-0

Revision History

Rev.	Issue Date	Revisions	Revised By
--	05/8/15	Initial Issue	D. Coronia

UL VERIFICATION SERVICES INC. FORM NO: CCSUP4701I
47173 BENICIA STREET, FREMONT, CA 94538, USA TEL: (510) 771-1000 FAX: (510) 661-0888

This report shall not be reproduced except in full, without the written approval of UL Verification Services Inc.

TABLE OF CONTENTS

1. ATTESTATION OF TEST RESULTS 5
2. TEST METHODOLOGY 6
3. FACILITIES AND ACCREDITATION 6
4. CALIBRATION AND UNCERTAINTY 6
4.1. MEASURING INSTRUMENT CALIBRATION 6
4.2. SAMPLE CALCULATION 6
4.3. MEASUREMENT UNCERTAINTY 7
5. EQUIPMENT UNDER TEST 8
5.1. DESCRIPTION OF EUT 8
5.2. MAXIMUM OUTPUT POWER 8
5.3. DESCRIPTION OF AVAILABLE ANTENNAS 9
5.4. DESCRIPTION OF TEST SETUP 10
6. TEST AND MEASUREMENT EQUIPMENT 13
7. SUMMARY TABLE 14
8. RF POWER OUTPUT VERIFICATION 15
8.1. CDMA2000 15
8.1.1. 1xRTT 15
8.1.2. CDMA2000 OUTPUT POWER RESULT 16
9. PEAK TO AVERAGE RATIO 17
9.1. CONDUCTED PEAK TO AVERAGE RESULT 18
10. LIMITS AND CONDUCTED RESULTS 19
10.1. OCCUPIED BANDWIDTH 19
10.1.1. OCCUPIED BANDWIDTH RESULTS 20
10.1.1. OCCUPIED BANDWIDTH PLOTS 21
10.2. BAND EDGE EMISSIONS 22
10.2.1. BAND EDGE PLOTS 23
10.3. OUT OF BAND EMISSIONS 24
10.3.1. OUT OF BAND EMISSIONS RESULT 25
10.3.2. OUT OF BAND EMISSIONS PLOTS 26
10.4. FREQUENCY STABILITY 27
10.4.1. FREQUENCY STABILITY RESULTS 28
11. RADIATED TEST RESULTS 30

UL VERIFICATION SERVICES INC. FORM NO: CCSUP4701I
47173 BENICIA STREET, FREMONT, CA 94538, USA TEL: (510) 771-1000 FAX: (510) 661-0888

This report shall not be reproduced except in full, without the written approval of UL Verification Services Inc.

11.1. RADIATED POWER (ERP & EIRP).....30
11.1.1. ERP/EIRP RESULTS.....31
11.1.2. LTE ERP/EIRP RESULTS.....32
11.2. FIELD STRENGTH OF SPURIOUS RADIATION.....34
11.2.1. SPURIOUS RADIATION PLOTS.....35
12. SETUP PHOTOS 37

This report shall not be reproduced except in full, without the written approval of UL Verification Services Inc.

1. ATTESTATION OF TEST RESULTS

COMPANY NAME:	LG ELECTRONICS MOBILECOMM U.S.A., INC
EUT DESCRIPTION:	CDMA Phone
MODEL:	LG109C
SERIAL NUMBER:	504CQVV0000183 (Conducted), 504CQRN0000182 (Radiated)
DATE TESTED:	APRIL 21-27, 2015

APPLICABLE STANDARDS	
STANDARD	**TEST RESULTS**
FCC PART 22H and 24E	PASS

UL Verification Services Inc. tested the above equipment in accordance with the requirements set forth in the above standards. All indications of Pass/Fail in this report are opinions expressed by UL Verification Services Inc. based on interpretations and/or observations of test results. Measurement Uncertainties were not taken into account and are published for informational purposes only. The test results show that the equipment tested is capable of demonstrating compliance with the requirements as documented in this report.

Note: The results documented in this report apply only to the tested sample, under the conditions and modes of operation as described herein. This document may not be altered or revised in any way unless done so by UL Verification Services Inc. and all revisions are duly noted in the revisions section. Any alteration of this document not carried out by UL Verification Services Inc. will constitute fraud and shall nullify the document. This report must not be used by the client to claim product certification, approval, or endorsement by NVLAP, NIST, any agency of the Federal Government, or any agency of any government.

Approved & Released For
UL Verification Services Inc. By:

DAN CORONIA
CONSUMER TECHNOLOGY DIVISION
WiSE PROJECT LEAD
UL VERIFICATION SERVICES INC

Tested By:

OREN STOELTING
CONSUMER TECHNOLOGY DIVISION
WiSE LAB EMC TECHNICIAN
UL VERIFICATION SERVICES INC

This report shall not be reproduced except in full, without the written approval of UL Verification Services Inc.

2. TEST METHODOLOGY

The tests documented in this report were performed in accordance with TIA-603-C, FCC CFR 47 Part 22, FCC CFR Part 24.

3. FACILITIES AND ACCREDITATION

The test sites and measurement facilities used to collect data are located at 47173 and 47266 Benicia Street, Fremont, California, USA. Line conducted emissions are measured only at the 47173 address. The following table identifies which facilities were utilized for radiated emission measurements documented in this report. Specific facilities are also identified in the test results sections.

47173 Benicia Street	47266 Benicia Street
☒ Chamber A(IC: 2324B-1)	☐ Chamber D(IC: 2324B-4)
☐ Chamber B(IC: 2324B-2)	☐ Chamber E(IC: 2324B-5)
☐ Chamber C(IC: 2324B-3)	☐ Chamber F(IC: 2324B-6)
	☐ Chamber G(IC: 2324B-7)
	☐ Chamber H(IC: 2324B-8)

UL Verification Services Inc. is accredited by NVLAP, Laboratory Code 200065-0. The full scope of accreditation can be viewed at http://ts.nist.gov/standards/scopes/2000650.htm.

4. CALIBRATION AND UNCERTAINTY

4.1. MEASURING INSTRUMENT CALIBRATION

The measuring equipment utilized to perform the tests documented in this report has been calibrated in accordance with the manufacturer's recommendations, and is traceable to recognized national standards

4.2. SAMPLE CALCULATION

Where relevant, the following sample calculation is provided:

EIRP = PSA reading with EUT worst orientation (dBm) + Path loss (dB) – cable loss(between the SG and substitution antenna) + Substitution Antenna Factor (dBi)

ERP = PSA reading with EUT worst orientation (dBm) + Path loss (dB) – cable loss(between the SG and substitution antenna)

(Path loss = Signal generator output – PSA reading with substitution antenna)

UL VERIFICATION SERVICES INC. FORM NO: CCSUP4701I
47173 BENICIA STREET, FREMONT, CA 94538, USA TEL: (510) 771-1000 FAX: (510) 661-0888

This report shall not be reproduced except in full, without the written approval of UL Verification Services Inc.

4.3. MEASUREMENT UNCERTAINTY

Where relevant, the following measurement uncertainty levels have been estimated for tests performed on the apparatus:

PARAMETER	UNCERTAINTY
Conducted Disturbance, 0.15 to 30 MHz	3.52 dB
Radiated Disturbance, 30 to 1000 MHz	4.94 dB
Radiated Disturbance, 1GHz to 40GHz	4.94 dB

Uncertainty figures are valid to a confidence level of 95%.

UL VERIFICATION SERVICES INC. FORM NO: CCSUP4701I
47173 BENICIA STREET, FREMONT, CA 94538, USA TEL: (510) 771-1000 FAX: (510) 661-0888

This report shall not be reproduced except in full, without the written approval of UL Verification Services Inc.

5. EQUIPMENT UNDER TEST

5.1. DESCRIPTION OF EUT

The EUT is a CDMA Phone

5.2. MAXIMUM OUTPUT POWER

The transmitter has a maximum peak conducted and radiated ERP / EIRP output powers as follows:

FCC Part 22/24						
Band	Frequency Range(MHz)	Modulation Peak	Conducted		Radiated	
			dBm	mW	dBm	mW
BC0	824~849	1xRTT	24.7	295.12	22.33	171.00
	824~849	EVDO REL. 0				
	824~849	EVDO REV. A				
BC1	1850~1910	1xRTT	25.3	338.84	23.68	233.35
	1850~1910	EVDO REL. 0				
	1850~1910	EVDO REV. A				

This report shall not be reproduced except in full, without the written approval of UL Verification Services Inc.

5.3. DESCRIPTION OF AVAILABLE ANTENNAS

The radio utilizes a PIFA antenna for the [List the bands supported] with a maximum peak gain as follow:

Frequency (MHz)	Peak Gain (dBi)
BC0, 824~849MHz	-1.4
BC1, 1850~1910MHz	2.9

UL VERIFICATION SERVICES INC. FORM NO: CCSUP4701I
47173 BENICIA STREET, FREMONT, CA 94538, USA TEL: (510) 771-1000 FAX: (510) 661-0888

This report shall not be reproduced except in full, without the written approval of UL Verification Services Inc.

5.4. DESCRIPTION OF TEST SETUP

SUPPORT EQUIPMENT

Support Equipment List				
Description	Manufacturer	Model	Serial Number	FCC ID
AC Adapter	LG	MCS-02WP	RB4Y2618606	N/A
Headset	LG	N/A	N/A	N/A

I/O CABLES (CONDUCTED SETUP)

I/O Cable List						
Cable No	Port	# of identical ports	Connector Type	Cable Type	Cable Length (m)	Remarks
1	RF Out	1	Spectrum Analyzer	Shielded	None	NA
2	Antenna Port	1	EUT	Shielded	0.1m	NA
3	RF In/Out	1	Communication Test Set	Shielded	1m	NA

I/O CABLES (RADIATED SETUP)

I/O CABLE LIST						
Cable No.	Port	# of Identical Ports	Connector Type	Cable Type	Cable Length	Remarks
1	USB	1	AC Adapter	Un-shielded	1.2m	NA
2	Jack	1	Headset	Shielded	1m	NA
3	RF In/out	1	Communication Test Set	Un-shielded	2m	NA

TEST SETUP

The EUT is continuously communicated to the call box during the tests.

UL VERIFICATION SERVICES INC. FORM NO: CCSUP4701I
47173 BENICIA STREET, FREMONT, CA 94538, USA TEL: (510) 771-1000 FAX: (510) 661-0888

This report shall not be reproduced except in full, without the written approval of UL Verification Services Inc.

SETUP DIAGRAM FOR TESTS (CONDUCTED TEST SETUP)

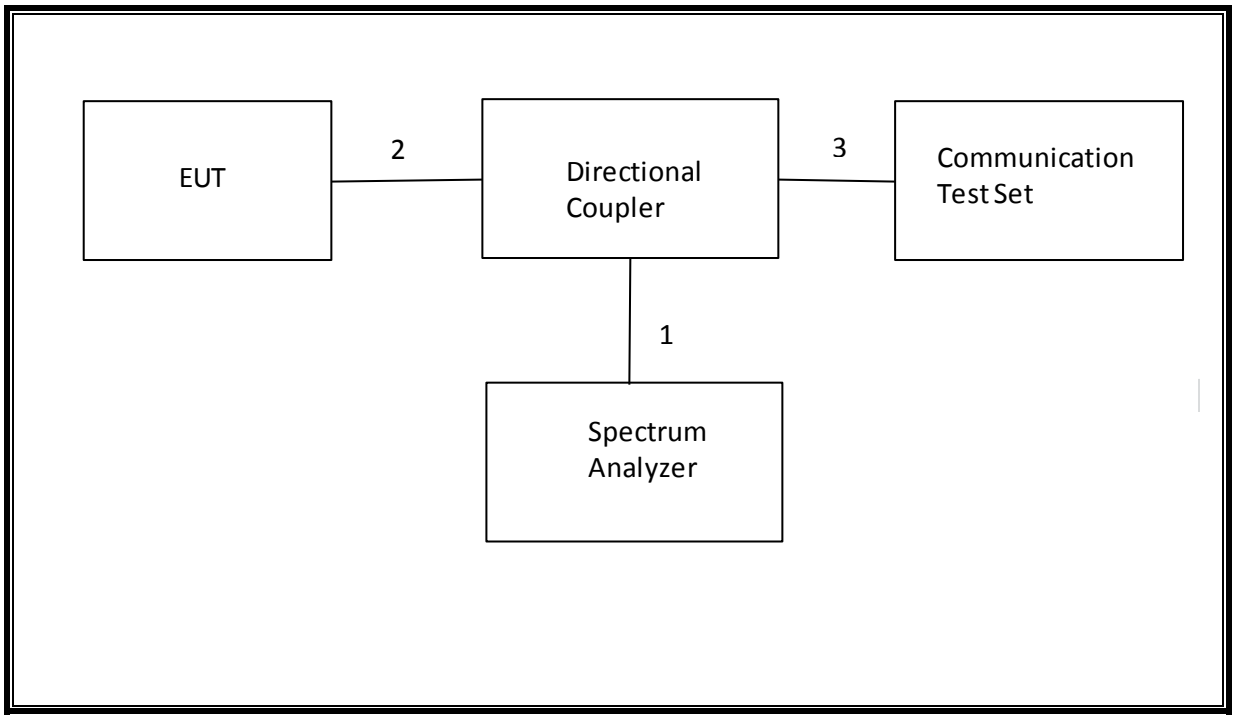

UL VERIFICATION SERVICES INC. FORM NO: CCSUP4701I
47173 BENICIA STREET, FREMONT, CA 94538, USA TEL: (510) 771-1000 FAX: (510) 661-0888

This report shall not be reproduced except in full, without the written approval of UL Verification Services Inc.

SETUP DIAGRAM FOR TESTS (RADIATED TEST SETUP)

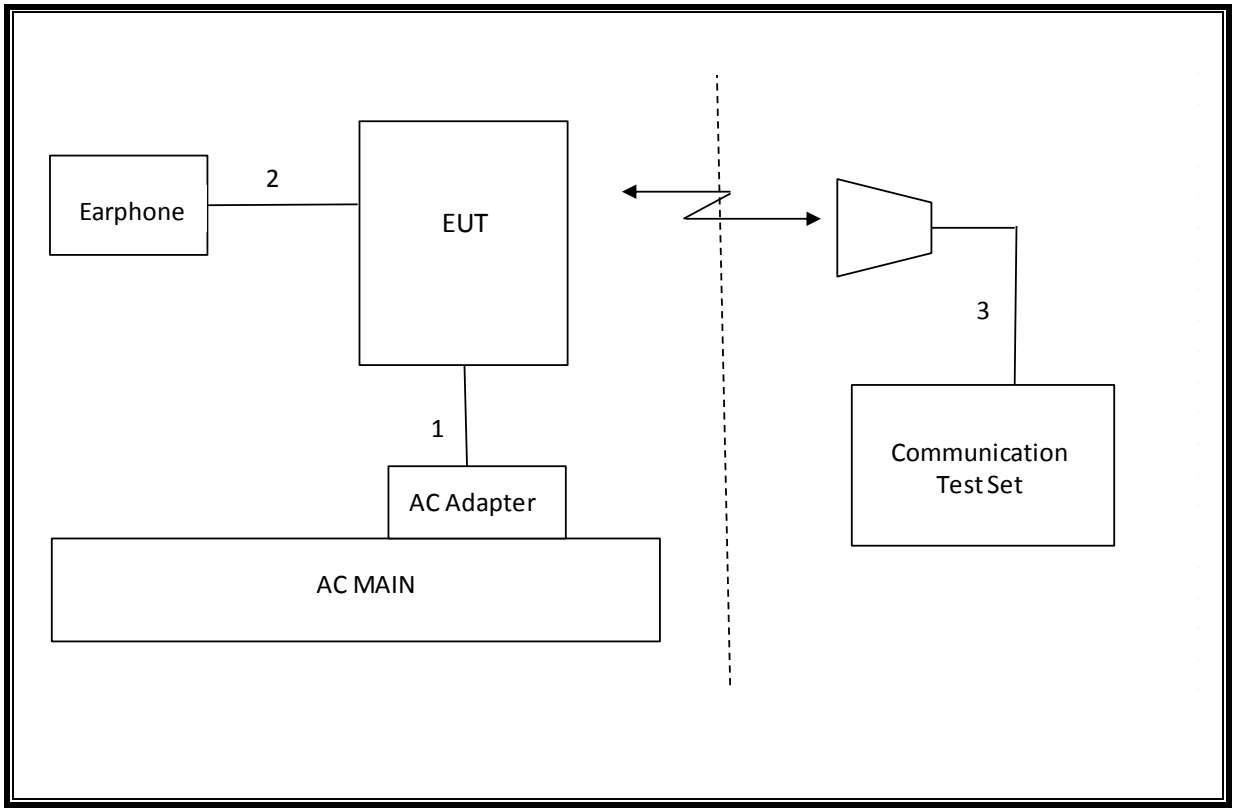

UL VERIFICATION SERVICES INC. FORM NO: CCSUP4701I
47173 BENICIA STREET, FREMONT, CA 94538, USA TEL: (510) 771-1000 FAX: (510) 661-0888

This report shall not be reproduced except in full, without the written approval of UL Verification Services Inc.

6. TEST AND MEASUREMENT EQUIPMENT

The following test and measurement equipment was utilized for the tests documented in this report:

TEST EQUIPMENT LIST				
Description	Manufacturer	Model	Asset	Cal Due
Spectrum Analyzer, 44 GHz	Agilent / HP	E4446A	C01179	05/01/15
Antenna, Bilog, 2 GHz	Sunol Sciences	JB1	T43	03/06/16
Antenna, Horn, 18 GHz	EMCO	3115	C00783	10/25/15
Antenna, Horn, 18 GHz	EMCO	3115	C00784	10/25/15
Highpass Filter, 2.7 GHz	Micro-Tronics	HPM13194	N02687	CNR
Highpass Filter, 1.5 GHz	Micro-Tronics	HPM13193	N02688	CNR
Temperature / Humidity Chamber	Thermotron	SE 600-10-10	C00930	05/12/15
Communications Test Set	R&S	CMW500	T159	07/02/15
DC power supply, 8 V @ 3 A or 15 V	Agilent / HP	E3610A	None	CNR
Vector signal generator, 6 GHz	Agilent / HP	E4438C	None	06/18/15
Antenna, Tuned Dipole 400~1000	ETS	3121C DB4	C00993	02/11/16
Directional Coupler	RF-Lambda	RFDC5M06G15	None	CNR
Antenna, Horn, 26.5 GHz	ARA	MWH-1826/B	C00589	12/17/15

Test Software List			
Description	Manufacturer	Model	Version
Radiated Software	UL	UL EMC	Version 9.5, 07/22/14
Conducted Software	UL	UL EMC	Version 9.5, 05/17/14
CLT Software	UL	UL RF	Version 1.0, 02/02/15
Antenna Port Software	UL	UL RF	Version 2.1.1.1, 1/20/15

This report shall not be reproduced except in full, without the written approval of UL Verification Services Inc.

7. SUMMARY TABLE

FCC Part Section	RSS Section(s)	Test Description	Test Limit	Test Condition	Test Result	Worst Case
2.1049	N/A	Occupied Band width (99%)	N/A	Conducted	Pass	1.2892MHz
22.917(a) 24.238(a)	RSS-132(4.5.1) RSS-133(6.5.1) RSS-139(6.5.1)	Band Edge / Conducted Spurious Emission	-13dBm		Pass	-13.278dBm
2.1046	N/A	Conducted output power	N/A		Pass	24.70dBm
22.355 24.235	RSS-132(4.3) RSS-133(6.3)	Frequency Stability	2.5PPM		Pass	0.018PPM
22.913(a)(2)	RSS-132(4.4)	Effective Radiated Power	38.5 dBm	Radiated	Pass	22.33dBm
24.232(c)	RSS-133(6.4)	Equivalent Isotropic Radiated Power	33dBm		Pass	23.68dBm
22.917(a) 24.238(a)	RSS-132(4.5.1) RSS-133(6.5.1)	Radiated Spurious Emission	-13dBm		Pass	-42.60dBm

UL VERIFICATION SERVICES INC. FORM NO: CCSUP4701I
47173 BENICIA STREET, FREMONT, CA 94538, USA TEL: (510) 771-1000 FAX: (510) 661-0888

This report shall not be reproduced except in full, without the written approval of UL Verification Services Inc.

8. RF POWER OUTPUT VERIFICATION

8.1. CDMA2000

8.1.1. 1xRTT

TEST PROCEDURE

This procedure assumes the Agilest 8960 Test Set has the following applications installed and with valid license.

Application	Rev, License
CDMA2000 Mobile Test	B.13.08, L

- Call Setup > Shift & Preset
- Cell Info > Cell Parameters > System ID (SID) > 7
  > Network ID (NID) > 1
- Protocol Rev > 6 (IS-2000-0)
- Radio Config (RC) > Please see following table or details
- FCH Service Option (SO) Setup > Please see following table or details
- Traffic Data Rate > Full
- TDSO SCH Info > F-SCH Parameters > F-SCH Data Rate > 153.6 kbps
  > R-SCH Parameters > R-SCH Data Rate > 153.6 kbps
- Rvs Power Ctrl > Active bits
  - Rvs Power Ctrl > All Up bits (Maximum TxPout)

UL VERIFICATION SERVICES INC. FORM NO: CCSUP4701I
47173 BENICIA STREET, FREMONT, CA 94538, USA TEL: (510) 771-1000 FAX: (510) 661-0888

This report shall not be reproduced except in full, without the written approval of UL Verification Services Inc.

8.1.2. CDMA2000 OUTPUT POWER RESULT

Band	Mode	Ch	Freq. (MHz)	Avg Pwr (dBm)
BC0	RC1, SO55 (Loopback)	1013	824.70	24.7
		384	836.52	24.7
		777	848.31	24.7
	RC3, SO55 (Loopback)	1013	824.70	24.7
		384	836.52	24.7
		777	848.31	24.7
	RC3, SO32 (+F-SCH)	1013	824.70	24.7
		384	836.52	24.7
		777	848.31	24.7

Band	Mode	Ch	Freq. (MHz)	Avg Pwr (dBm)
BC1	RC1, SO55 (Loopback)	25	1851.25	25.3
		600	1880.00	25.1
		1175	1908.75	25.2
	RC3, SO55 (Loopback)	25	1851.25	25.2
		600	1880.00	25.2
		1175	1908.75	25.2
	RC3, SO32 (+F-SCH)	25	1851.25	25.3
		600	1880.00	25.1
		1175	1908.75	25.2

UL VERIFICATION SERVICES INC. FORM NO: CCSUP4701I
47173 BENICIA STREET, FREMONT, CA 94538, USA TEL: (510) 771-1000 FAX: (510) 661-0888
This report shall not be reproduced except in full, without the written approval of UL Verification Services Inc.

9. PEAK TO AVERAGE RATIO

TEST PROCEDURE

Per KDB 971168 D01 Power Meas License Digital Systems v02r01

TEST SPEC

In addition, when the transmitter power is measured in terms of average value, the peak-to-average ratio of the power shall not exceed 13 dB.

MODES TESTED

CDMA BC0, CDMA BC1

RESULTS

This report shall not be reproduced except in full, without the written approval of UL Verification Services Inc.

9.1. CONDUCTED PEAK TO AVERAGE RESULT

Band BC0	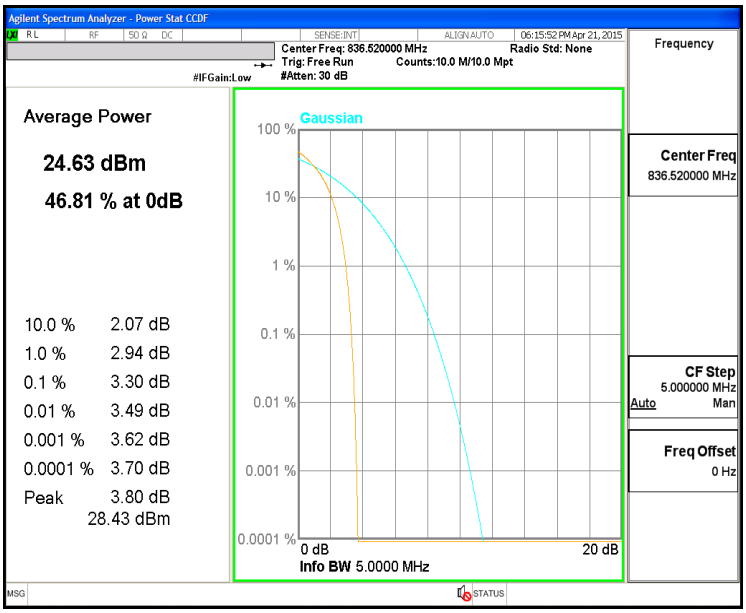 Band BC0 1xRTT OBW Mid channel
Band BC1	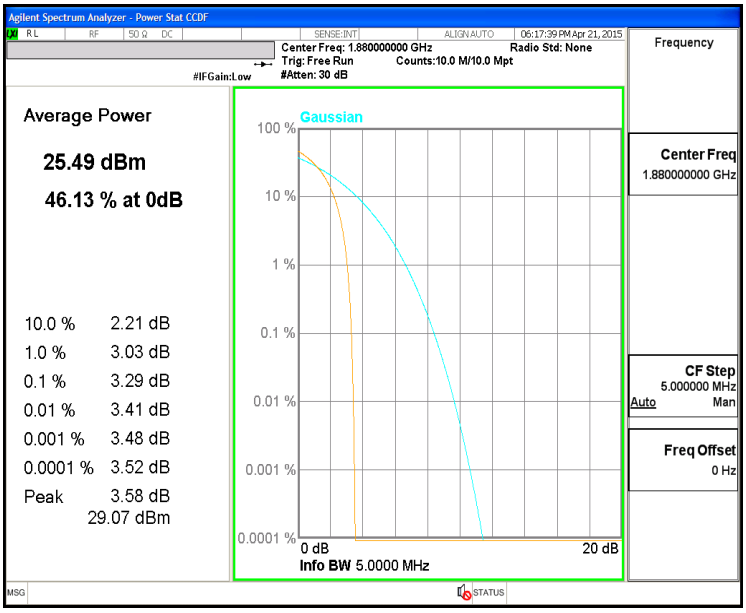 Band BC1 1xRTT OBW Mid channel

This report shall not be reproduced except in full, without the written approval of UL Verification Services Inc.

10. LIMITS AND CONDUCTED RESULTS

10.1. OCCUPIED BANDWIDTH

RULE PART(S)

FCC: §2.1049

LIMITS

For reporting purposes only

TEST PROCEDURE

The transmitter output was connected to a calibrated coaxial cable and coupler, the other end of which was connected to a spectrum analyzer. The occupied bandwidth was measured with the spectrum analyzer at the low, middle and high channel in each band. The -26dB bandwidth was also measured and recorded.

(KDB 971168 D01 Power Meas License Digital Systems v02r01)

MODES TESTED

CDMA BC0, CDMA BC1

RESULTS

UL VERIFICATION SERVICES INC. FORM NO: CCSUP4701I
47173 BENICIA STREET, FREMONT, CA 94538, USA TEL: (510) 771-1000 FAX: (510) 661-0888

This report shall not be reproduced except in full, without the written approval of UL Verification Services Inc.

10.1.1. OCCUPIED BANDWIDTH RESULTS

Band	Mode	Channel	f (MHz)	99% BW (MHz)	-26dB BW (MHz)
BC0	1xRTT	1013	824.7	1.28	1.41
		384	836.52	1.28	1.43
		777	848.31	1.28	1.42
	EVDO REL. 0	1013	824.7		
		384	836.52		
		777	848.31		
	EVDO REV. A	1013	824.7		
		384	836.52		
		777	848.31		
BC1	1xRTT	25	1851.25	1.28	1.44
		600	1880	1.29	1.43
		1175	1908.75	1.29	1.44
	EVDO REL. 0	25	1851.25		
		600	1880		
		1175	1908.75		
	EVDO REV. A	25	1851.25		
		600	1880		
		1175	1908.75		

UL VERIFICATION SERVICES INC. FORM NO: CCSUP4701I
47173 BENICIA STREET, FREMONT, CA 94538, USA TEL: (510) 771-1000 FAX: (510) 661-0888
This report shall not be reproduced except in full, without the written approval of UL Verification Services Inc.

10.1.1. OCCUPIED BANDWIDTH PLOTS

Band BC0	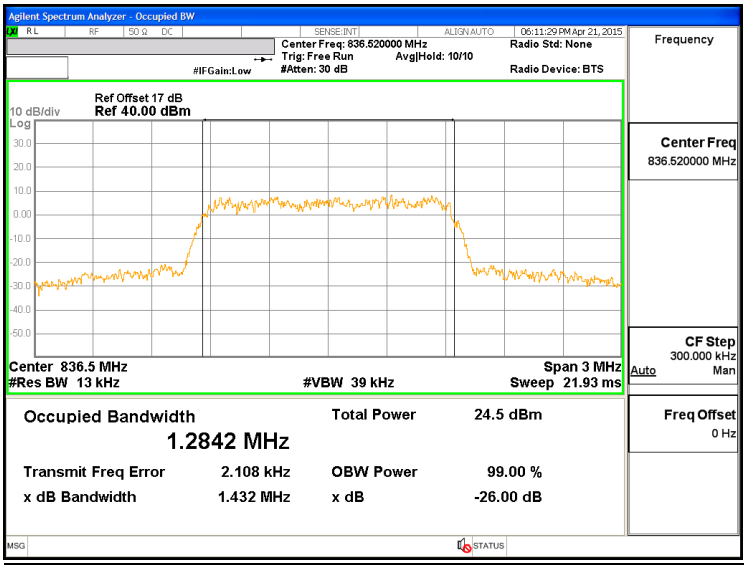 Band BC0 1xRTT OBW Mid channel
Band BC1	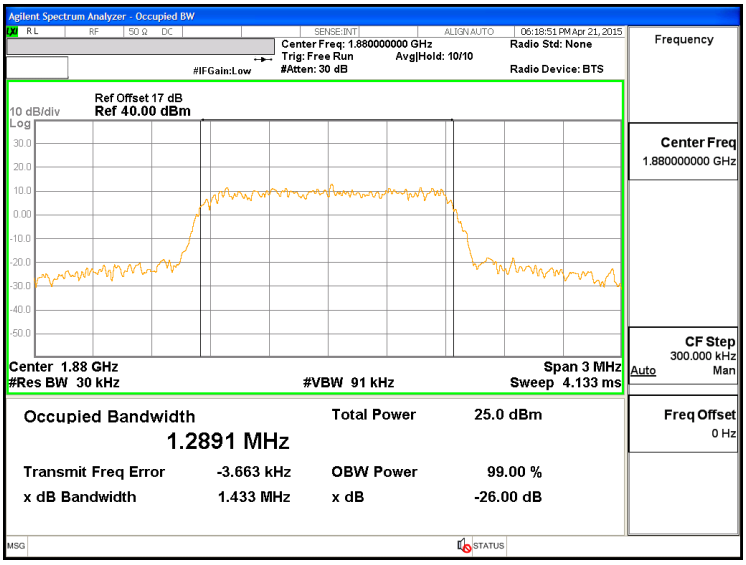 Band BC1 1xRTT OBW Mid channel

UL VERIFICATION SERVICES INC. FORM NO: CCSUP4701I
47173 BENICIA STREET, FREMONT, CA 94538, USA TEL: (510) 771-1000 FAX: (510) 661-0888

This report shall not be reproduced except in full, without the written approval of UL Verification Services Inc.

10.2. BAND EDGE EMISSIONS

RULE PART(S)

FCC: §22.359, §24.238

LIMITS

The power of any emission outside of the authorized operating frequency ranges must be attenuated below the transmitting power (P) by a factor of at least 43 + 10 log (P) dB.

TEST PROCEDURE

Per KDB 971168 D01 Power Meas License Digital Systems v02r01
The transmitter output was connected to an Agilent 8960 or a CMW500 Test Set and configured to operate at maximum power. The band edge emissions were measured at the required operating frequencies in each band on the Spectrum Analyzer.

MODES TESTED

CDMA BC0, CDMA BC1

RESULTS

UL VERIFICATION SERVICES INC. FORM NO: CCSUP4701I
47173 BENICIA STREET, FREMONT, CA 94538, USA TEL: (510) 771-1000 FAX: (510) 661-0888

This report shall not be reproduced except in full, without the written approval of UL Verification Services Inc.

10.2.1. BAND EDGE PLOTS

Band BC0	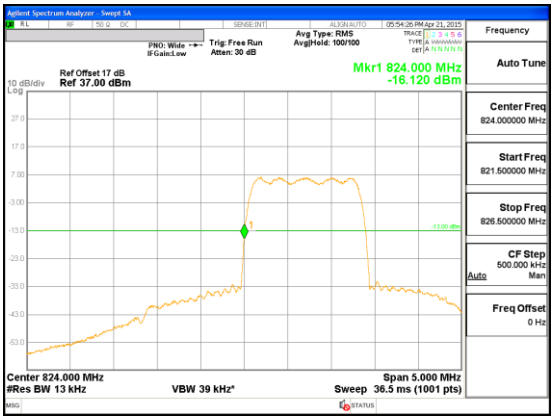 Band BC0 1xRTT CBE Low channel	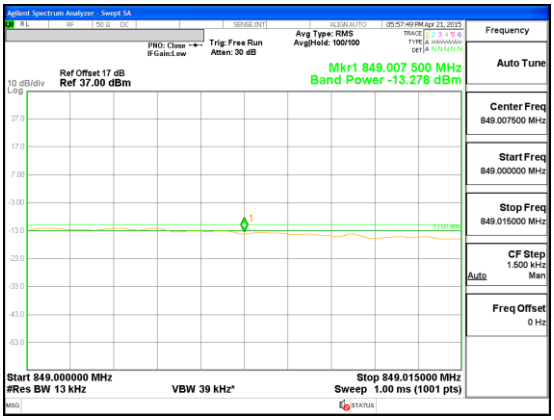 Band BC0 1xRTT CBE High channel
Band BC1	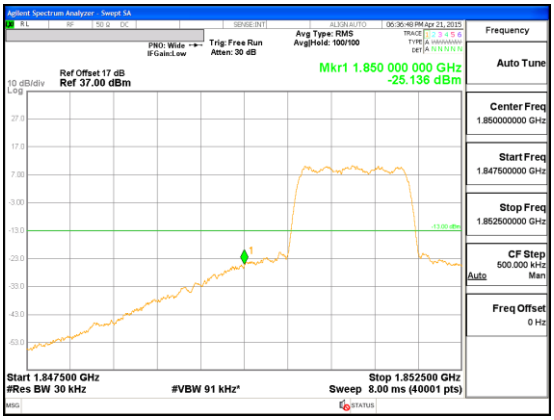 Band BC1 1xRTT CBE Low channel	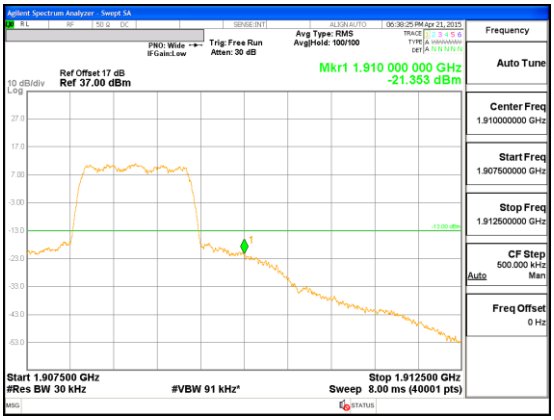 Band BC1 1xRTT CBE High channel

This report shall not be reproduced except in full, without the written approval of UL Verification Services Inc.

10.3. OUT OF BAND EMISSIONS

RULE PART(S)

FCC: §2.1051, §22.901, §22.917, §24.238

LIMITS

The power of any emission outside of the authorized operating frequency ranges must be attenuated below the transmitting power (P) by a factor of at least 43 + 10 log (P) dB.

TEST PROCEDURE

Per KDB 971168 D01 Power Meas License Digital Systems v02r01

The RF output of the transmitter was connected to a spectrum analyzer through a calibrated coaxial cable. Sufficient scans were taken to show the out-of-band Emissions, if any, up to 10th harmonic. Multiple sweeps were recorded in maximum hold mode using a peak detector to ensure that the worst-case emissions were caught.

MODES TESTED

CDMA BC0, CDMA BC1

RESULTS

UL VERIFICATION SERVICES INC. FORM NO: CCSUP4701I
47173 BENICIA STREET, FREMONT, CA 94538, USA TEL: (510) 771-1000 FAX: (510) 661-0888

This report shall not be reproduced except in full, without the written approval of UL Verification Services Inc.

10.3.1. OUT OF BAND EMISSIONS RESULT

Band	Mode	f (MHz)	Spur (dBm)	Spec (dBm)	Delta (dB)
BC0	1xRTT	824.7	-30.507	-13	-17.507
		836.52	-30.551	-13	-17.551
		848.31	-29.646	-13	-16.646
BC1	1xRTT	1851.25	-28.049	-13	-15.049
		1880	-28.103	-13	-15.103
		1908.75	-27.992	-13	-14.992

UL VERIFICATION SERVICES INC. FORM NO: CCSUP4701I
47173 BENICIA STREET, FREMONT, CA 94538, USA TEL: (510) 771-1000 FAX: (510) 661-0888
This report shall not be reproduced except in full, without the written approval of UL Verification Services Inc.

10.3.2. OUT OF BAND EMISSIONS PLOTS

Band

BC0

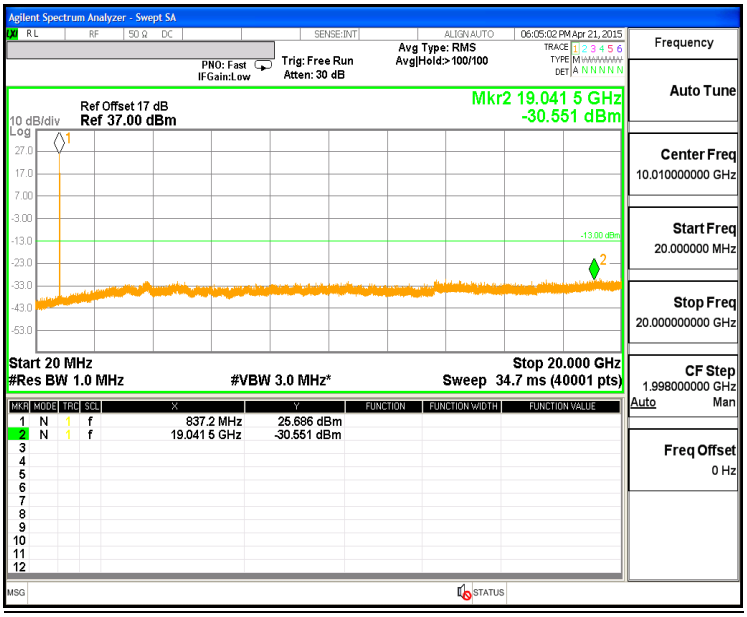

Band BC0 1xRTT CSE Mid channel

Band

BC1

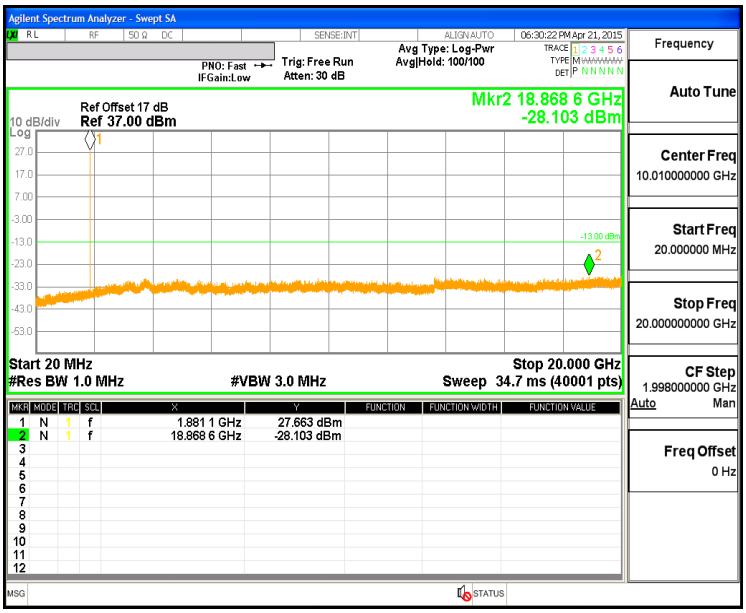

Band BC1 1xRTT CSE Mid channel

UL VERIFICATION SERVICES INC. FORM NO: CCSUP4701I
47173 BENICIA STREET, FREMONT, CA 94538, USA TEL: (510) 771-1000 FAX: (510) 661-0888

This report shall not be reproduced except in full, without the written approval of UL Verification Services Inc.

10.4. FREQUENCY STABILITY

RULE PART(S)

FCC: §2.1055, §22.355, §24.235

LIMITS

§22.355 - The carrier frequency shall not depart from the reference frequency in excess of ±2.5 ppm for mobile stations.

§24.235 - The frequency stability shall be sufficient to ensure that the fundamental emission stays within the authorized frequency block.

TEST PROCEDURE

Per KDB 971168 D01 Power Meas License Digital Systems v02r01

MODES TESTED

CDMA BC0, CDMA BC1

RESULTS

See the following pages.

UL VERIFICATION SERVICES INC. FORM NO: CCSUP4701I
47173 BENICIA STREET, FREMONT, CA 94538, USA TEL: (510) 771-1000 FAX: (510) 661-0888

This report shall not be reproduced except in full, without the written approval of UL Verification Services Inc.

10.4.1. FREQUENCY STABILITY RESULTS

BC0 CELL BAND, – MID CHANNEL 384, Frequency 836.52 MHz

Reference Frequency: PCS Mid Channel		836.52	MHz @ 20°C	
Limit: to stay +- 2.5 ppm =		2091.300	Hz	
Power Supply (Vdc)	**Environment Temperature (°C)**	**Frequency Deviation Measureed with Time Elapse (MHz)**	**Delta (ppm)**	**Limit (ppm)**
3.80	50	836.519994	0.014	2.5
3.80	40	836.520004	0.002	2.5
3.80	30	836.520005	0.001	2.5
3.80	***20***	**836.520006**	**0**	***2.5***
3.80	10	836.519993	0.015	2.5
3.80	0	836.519994	0.014	2.5
3.80	-10	836.520004	0.002	2.5
3.80	-20	836.519991	0.018	2.5
3.80	-30	836.519996	0.012	2.5

Reference Frequency: PCS Mid Channel		836.52	MHz @ 20°C	
Limit: to stay +- 2.5 ppm =		2091.300	Hz	
Power Supply (Vdc)	**Environment Temperature (°C)**	**Frequency Deviation Measureed with Time Elapse (MHz)**	**Delta (ppm)**	**Limit (ppm)**
3.80	***20***	***836.520006***	***0***	***2.5***
4.30	20	836.5200123	*-0.008*	2.5
3.20	20	836.5199954	*0.012*	2.5

UL VERIFICATION SERVICES INC. FORM NO: CCSUP4701I
47173 BENICIA STREET, FREMONT, CA 94538, USA TEL: (510) 771-1000 FAX: (510) 661-0888

This report shall not be reproduced except in full, without the written approval of UL Verification Services Inc.

BC1 CELL BAND, Mid Channel 600 Freq: 1880MHz

Reference Frequency: PCS Mid Channel		1880	MHz @ 20°C	
Limit: to stay +- 2.5 ppm =		4700.000	Hz	
Power Supply (Vdc)	**Environment Temperature (°C)**	**Frequency Deviation Measureed with Time Elapse (MHz)**	**Delta (ppm)**	**Limit (ppm)**
3.80	50	1879.999990	-0.001	2.5
3.80	40	1879.999989	-0.001	2.5
3.80	30	1879.999990	-0.002	2.5
3.80	***20***	**1879.999987**	**0**	***2.5***
3.80	10	1879.999991	-0.002	2.5
3.80	0	1879.999989	-0.001	2.5
3.80	-10	1879.999989	-0.001	2.5
3.80	-20	1879.999989	-0.001	2.5
3.80	-30	1879.999991	-0.002	2.5

Reference Frequency: PCS Mid Channel		1880	MHz @ 20°C	
Limit: to stay +- 2.5 ppm =		4700.000	Hz	
Power Supply (Vdc)	**Environment Temperature (°C)**	**Frequency Deviation Measureed with Time Elapse (MHz)**	**Delta (ppm)**	**Limit (ppm)**
3.80	***20***	***1879.999987***	***0***	***2.5***
4.30	20	1879.999991	*-0.002*	2.5
3.20	20	1879.999991	*-0.002*	2.5

UL VERIFICATION SERVICES INC. FORM NO: CCSUP4701I
47173 BENICIA STREET, FREMONT, CA 94538, USA TEL: (510) 771-1000 FAX: (510) 661-0888

This report shall not be reproduced except in full, without the written approval of UL Verification Services Inc.

11. RADIATED TEST RESULTS

11.1. RADIATED POWER (ERP & EIRP)

RULE PART(S)

FCC: §2.1046, §22.913, §24.232

LIMITS

22.913(a) - The ERP of mobile transmitters and auxiliary test transmitters must not exceed 7 Watts.

24.232(c) - Mobile/portable stations are limited to 2 watts e.i.r.p. peak power and the equipment must employ means to limit the power to the minimum necessary for successful communications.

In addition, when the transmitter power is measured in terms of average value, the peak-to-average ratio of the power shall not exceed 13dB.

TEST PROCEDURE

ANSI / TIA / EIA 603C Clause 2.2.17; PSA setting reference to 971168 D01 v02r01

For peak power measurement with a PSA:

a) Set the RBW ≥ OBW; b) Set VBW ≥ 3 × RBW; c) Set span ≥ 2 x RBW; d) Sweep time = auto couple; e) Detector = peak; f) Ensure that the number of measurement points ≥ span/RBW; g) Trace mode = max hold;

MODES TESTED

CDMA BC0, CDMA BC1

TEST RESULTS

UL VERIFICATION SERVICES INC. FORM NO: CCSUP4701I
47173 BENICIA STREET, FREMONT, CA 94538, USA TEL: (510) 771-1000 FAX: (510) 661-0888

This report shall not be reproduced except in full, without the written approval of UL Verification Services Inc.

11.1.1. ERP/EIRP RESULTS

CDMA BC0

Band	Mode	Channel	f(MHz)	ERP	
				dBm	mW
BC0	1xRTT	1013	824.7	20.91	123.31
		384	836.52	22.33	171.00
		777	848.31	22.16	164.44
	EVDO REL. 0	1013	824.7		
		384	836.52		
		777	848.31		
	EVDO REV. A	1013	824.7		
		384	836.52		
		777	848.31		

CDMA BC1

Band	Mode	Channel	f(MHz)	EIRP	
				dBm	mW
BC1	1xRTT	25	1851.25	22.79	190.11
		600	1880	23.68	233.35
		1175	1908.75	22.79	190.11
	EVDO REL. 0	25	1851.25		
		600	1880		
		1175	1908.75		
	EVDO REV. A	25	1851.25		
		600	1880		
		1175	1908.75		

UL VERIFICATION SERVICES INC. FORM NO: CCSUP4701I
47173 BENICIA STREET, FREMONT, CA 94538, USA TEL: (510) 771-1000 FAX: (510) 661-0888
This report shall not be reproduced except in full, without the written approval of UL Verification Services Inc.

11.1.2. LTE ERP/EIRP RESULTS

Band

BC0

High Frequency Substitution Measurement
UL Verification Services, Inc. Chamber A

Company: LG
Project #: 15I20516
Date: 4/27/2015
Test Engineer: O. Stoelting
Configuration: X-pos EUT Only
Mode: CDMA RTT BC1

Test Equipment:
Receiving: Sunol T130, and Chamber A SMA-type Cable
Substitution: Dipole T416, 6ft N-type Cable Warehouse.

f MHz	SG reading (dBm)	Ant. Pol. (H/V)	Cable Loss (dB)	Antenna Gain (dBd)	ERP (dBm)	Limit (dBm)	Margin (dB)	Notes
Low Ch								
824.70	13.91	V	0.9	0.0	13.01	38.5	-25.4	
824.70	21.80	H	0.9	0.0	20.91	38.5	-17.5	
Mid Ch								
836.52	12.43	V	0.9	0.0	11.53	38.5	-26.9	
836.52	23.22	H	0.9	0.0	22.33	38.5	-16.1	
High Ch								
848.31	12.77	V	0.9	0.0	11.87	38.5	-26.6	
848.31	23.06	H	0.9	0.0	22.16	38.5	-16.3	

Rev. 3.17.11
Note: For Band 13/17 ERP limit is 34.77dBm; For Band 26 limit is 50dBm

UL VERIFICATION SERVICES INC. FORM NO: CCSUP4701I
47173 BENICIA STREET, FREMONT, CA 94538, USA TEL: (510) 771-1000 FAX: (510) 661-0888
This report shall not be reproduced except in full, without the written approval of UL Verification Services Inc.

Band

BC1

High Frequency Substitution Measurement
UL Verification Services Chamber A

Company: LG
Project #: 15I20516
Date: 4/27/2015
Test Engineer: O. Stoelting
Configuration: X-pos EUT Only
Mode: CDMA RTT BC1

Test Equipment:
Receiving: Horn T136, and Chamber A SMA Cables
Substitution: Horn T59 Substitution, 6ft N-type Cable

f GHz	SG reading (dBm)	Ant. Pol. (H/V)	Cable Loss (dB)	Antenna Gain (dBi)	EIRP (dBm)	Limit (dBm)	Delta (dB)	Notes
Low Ch								
1.8513	12.9	V	0.85	8.05	20.06	33.0	-12.9	
1.8513	15.6	H	0.85	8.05	22.79	33.0	-10.2	
Mid Ch								
1.8800	10.4	V	0.85	8.03	17.54	33.0	-15.5	
1.8800	16.5	H	0.85	8.03	23.68	33.0	-9.3	
High Ch								
1.9088	14.1	V	0.85	8.05	21.27	33.0	-11.7	
1.9088	15.6	H	0.85	8.05	22.79	33.0	-10.2	

Rev. 3.17.11

UL VERIFICATION SERVICES INC. FORM NO: CCSUP4701I
47173 BENICIA STREET, FREMONT, CA 94538, USA TEL: (510) 771-1000 FAX: (510) 661-0888

This report shall not be reproduced except in full, without the written approval of UL Verification Services Inc.

11.2. FIELD STRENGTH OF SPURIOUS RADIATION

RULE PART(S)

FCC: §2.1053, §22.917, §24.238

LIMIT

The power of any emission outside of the authorized operating frequency ranges must be attenuated below the transmitting power (P) by a factor of at least 43 + 10 log (P) dB.

TEST PROCEDURE

For Cellular equipment - Compliance with these rules is based on the use of measurement instrumentation employing a resolution bandwidth of 100 kHz or greater. In the 1 MHz bands immediately outside and adjacent to the frequency block a resolution bandwidth of at least one percent of the emission bandwidth of the fundamental emission of the transmitter may be employed. A narrower resolution bandwidth is permitted in all cases to improve measurement accuracy provided the measured power is integrated over the full required measurement bandwidth (i.e. 100 kHz or 1 percent of emission bandwidth, as specified). The emission bandwidth is defined as the width of the signal between two points, one below the carrier center frequency and one above the carrier center frequency, outside of which all emissions are attenuated at least 26 dB below the transmitter power.

For PCS equipment - Compliance with these rules is based on the use of measurement instrumentation employing a resolution bandwidth of 1 MHz or greater. However, in the 1 MHz bands immediately outside and adjacent to the frequency block a resolution bandwidth of at least one percent of the emission bandwidth of the fundamental emission of the transmitter may be employed. A narrower resolution bandwidth is permitted in all cases to improve measurement accuracy provided the measured power is integrated over the full required measurement bandwidth (i.e. 1 MHz or 1 percent of emission bandwidth, as specified). The emission bandwidth is defined as the width of the signal between two points, one below the carrier center frequency and one above the carrier center frequency, outside of which all emissions are attenuated at least 26 dB below the transmitter power.

MODES TESTED

CDMA BC0, CDMA BC1

RESULTS

UL VERIFICATION SERVICES INC. FORM NO: CCSUP4701I
47173 BENICIA STREET, FREMONT, CA 94538, USA TEL: (510) 771-1000 FAX: (510) 661-0888

This report shall not be reproduced except in full, without the written approval of UL Verification Services Inc.

11.2.1. SPURIOUS RADIATION PLOTS

Band BC0

UL Verification Services, Inc.
Above 1GHz High Frequency Substitution Measurement

Company: LG
Project #: 15I20516
Date: 4/27/2015
Test Engineer: O. Stoelting
Configuration: X-pos EUT, AC Charger
Location: Chamber A
Mode: CDMA 1xRTT BC0 Harmonics

f MHz	SG reading (dBm)	Ant. Pol. (H/V)	Distance (m)	Preamp (dB)	Filter (dB)	EIRP (dBm)	Limit (dBm)	Delta (dB)	Notes
Low Ch, 824.7									
1649.40	-21.6	V	3.0	37.4	1.0	-58.0	-13.0	-45.0	
2474.10	-26.3	V	3.0	36.4	1.0	-61.7	-13.0	-48.7	
3298.80	-22.7	V	3.0	35.8	1.0	-57.5	-13.0	-44.5	
1649.40	-23.0	H	3.0	37.4	1.0	-59.4	-13.0	-46.4	
2474.10	-24.9	H	3.0	36.4	1.0	-60.3	-13.0	-47.3	
3298.80	-22.1	H	3.0	35.8	1.0	-56.9	-13.0	-43.9	
Mid Ch, 836.52									
1673.04	-18.7	V	3.0	37.3	1.0	-55.0	-13.0	-42.0	
2509.56	-26.3	V	3.0	36.4	1.0	-61.7	-13.0	-48.7	
3346.08	-22.1	V	3.0	35.8	1.0	-56.9	-13.0	-43.9	
1673.04	-19.9	H	3.0	37.3	1.0	-56.2	-13.0	-43.2	
2509.56	-23.8	H	3.0	36.4	1.0	-59.2	-13.0	-46.2	
3346.08	-22.4	H	3.0	35.8	1.0	-57.2	-13.0	-44.2	
High Ch, 848.31									
1696.62	-18.0	V	3.0	37.3	1.0	-54.3	-13.0	-41.3	
2544.93	-26.6	V	3.0	36.3	1.0	-61.9	-13.0	-48.9	
3393.24	-22.4	V	3.0	35.7	1.0	-57.1	-13.0	-44.1	
1696.62	-19.1	H	3.0	37.3	1.0	-55.4	-13.0	-42.4	
2544.93	-24.5	H	3.0	36.3	1.0	-59.8	-13.0	-46.8	
3393.24	-22.2	H	3.0	35.7	1.0	-56.9	-13.0	-43.9	

This report shall not be reproduced except in full, without the written approval of UL Verification Services Inc.

UL Verification Services, Inc.
Above 1GHz High Frequency Substitution Measurement

Company: LG
Project #: 15I20516
Date: 4/27/2015
Test Engineer: O. Stoelting
Configuration: X-pos EUT, AC Charger
Location: Chamber A
Mode: CDMA 1xRTT BC1 Harmonics

Band BC1

f MHz	SG reading (dBm)	Ant. Pol. (H/V)	Distance (m)	Preamp (dB)	Filter (dB)	EIRP (dBm)	Limit (dBm)	Delta (dB)	Notes
Low Ch, 1851.25									
3702.50	-16.2	V	3.0	35.9	1.0	-51.1	-13.0	-38.1	
5553.75	-18.5	V	3.0	35.5	1.0	-53.0	-13.0	-40.0	
7405.00	-17.4	V	3.0	35.7	1.0	-52.1	-13.0	-39.1	
3702.50	-8.0	H	3.0	35.9	1.0	-42.8	-13.0	-29.8	
5553.75	-17.9	H	3.0	35.5	1.0	-52.4	-13.0	-39.4	
7405.00	-16.5	H	3.0	35.7	1.0	-51.3	-13.0	-38.3	
Mid Ch, 1880									
3760.00	-7.8	V	3.0	35.8	1.0	-42.6	-13.0	-29.6	
5640.00	-18.2	V	3.0	35.5	1.0	-52.7	-13.0	-39.7	
7520.00	-16.9	V	3.0	35.7	1.0	-51.6	-13.0	-38.6	
3760.00	-9.9	H	3.0	35.8	1.0	-44.7	-13.0	-31.7	
5640.00	-17.8	H	3.0	35.5	1.0	-52.2	-13.0	-39.2	
7520.00	-16.1	H	3.0	35.7	1.0	-50.8	-13.0	-37.8	
High Ch, 1908.75									
3817.50	-12.7	V	3.0	35.8	1.0	-47.5	-13.0	-34.5	
5726.25	-17.9	V	3.0	35.5	1.0	-52.4	-13.0	-39.4	
7635.00	-16.4	V	3.0	35.8	1.0	-51.1	-13.0	-38.1	
3817.50	-17.7	H	3.0	35.8	1.0	-52.5	-13.0	-39.5	
5726.25	-17.8	H	3.0	35.5	1.0	-52.3	-13.0	-39.3	
7635.00	-15.6	H	3.0	35.8	1.0	-50.4	-13.0	-37.4	

UL VERIFICATION SERVICES INC. FORM NO: CCSUP4701I
47173 BENICIA STREET, FREMONT, CA 94538, USA TEL: (510) 771-1000 FAX: (510) 661-0888
This report shall not be reproduced except in full, without the written approval of UL Verification Services Inc.