LG
Life's Good

LG-D725
User Guide

All screen shots in this guide are simulated.
Actual displays and the color of the phone may vary.
Some of the contents in this manual may differ from your phone depending on the software of the phone or your service provider.

MFL00000000 (1.0)

BC

www.lg.com

LIMITED WARRANTY STATEMENT

1. WHAT THIS WARRANTY COVERS :

LG offers you a limited warranty that the enclosed subscriber unit and its enclosed accessories will be free from defects in material and workmanship, according to the following terms and conditions:

1. The limited warranty for the product extends for TWELVE (12) MONTHS beginning on the date of purchase of the product with valid proof of purchase, or absent valid proof of purchase, FIFTEEN (15) MONTHS from date of manufacture as determined by the unit's manufacture date code.

2. The limited warranty extends only to the original purchaser of the product and is not assignable or transferable to any subsequent purchaser/end user.

3. This warranty is good only to the original purchaser of the product during the warranty period as long as it is in the U.S, including Alaska, Hawaii, U.S. Territories and Canada.

4. The external housing and cosmetic parts shall be free of defects at the time of shipment and, therefore, shall not be covered under these limited warranty terms.

5. Upon request from LG, the consumer must provide information to reasonably prove the date of purchase.

6. The customer shall bear the cost of shipping the product to the Customer Service Department of LG. LG shall bear the cost of shipping the product back to the consumer after the completion of service under this limited warranty.

2. WHAT THIS WARRANTY DOES NOT COVER :

1. Defects or damages resulting from use of the product in other than its normal and customary manner.

2. Defects or damages from abnormal use, abnormal conditions, improper storage, exposure to moisture or dampness, unauthorized modifications, unauthorized connections, unauthorized repair, misuse, neglect, abuse, accident, alteration, improper installation, or other acts which are not the fault of LG, including damage caused by shipping, blown fuses, spills of food or liquid.

3. Breakage or damage to antennas unless caused directly by defects in material or workmanship.

4. That the Customer Service Department at LG was not notified by consumer of the alleged defect or malfunction of the product during the applicable limited warranty period.

5. Products which have had the serial number removed or made illegible.

6. This limited warranty is in lieu of all other warranties, express or implied either in fact or by operations of law, statutory or otherwise, including, but not limited to any implied warranty of marketability or fitness for a particular use.

7. Damage resulting from use of non-LG approved accessories.

8. All plastic surfaces and all other externally exposed parts that are scratched or damaged due to normal customer use.

9. Products operated outside published maximum ratings.

10. Products used or obtained in a rental program.

11. Consumables (such as fuses).

3. WHAT LG WILL DO:

LG will, at its sole discretion, either repair, replace or refund the purchase price of any unit that does not conform to this limited warranty. LG may choose at its discretion to use functionally equivalent reconditioned, refurbished or new units or parts or any units. In addition, LG will not re-install or back-up any data, applications or software that you have added to your phone. It is therefore recommended that you back-up any such data or information prior to sending the unit to LG to avoid the permanent loss of such information.

4. STATE LAW RIGHTS :

No other ex warranty is applicable to this product. THE DURATION OF ANY IMPLIED WARRANTIES, INCLUDING THE IMPLIED WARRANTY OF MARKETABILITY, IS LIMITED TO THE DURATION OF THE EXPRESS WARRANTY HEREIN. LG INFOCOMM INC. SHALL NOT BE LIABLE FOR THE LOSS OF THE USE OF THE PRODUCT, INCONVENIENCE, LOSS OR ANY OTHER DAMAGES, DIRECT OR CONSEQUENTIAL, ARISING OUT OF THE USE OF, OR INABILITY TO USE, THIS PRODUCT OR FOR ANY BREACH OF ANY EXPRESS OR IMPLIED WARRANTY, INCLUDING THE IMPLIED WARRANTY OF MARKETABILITY APPLICABLE TO THIS PRODUCT.

Some states do not allow the exclusive of limitation of incidental or consequential damages or limitations on how long an implied warranty lasts; so these limitations or exclusions may not apply to you. This warranty gives you specific legal rights and you may also have other rights which vary from state to state.

5. HOW TO GET WARRANTY SERVICE :

To obtain warranty service, please call or fax to the following telephone numbers from anywhere in the continental United States:

Tel. 1-800-793-8896 or Fax. 1-800-448-4026

Or visit www.lg.com.
Correspondence may also be mailed to:

LG Electronics MobileComm U.S.A., Inc.

201 James Record Road Huntsville, AL 35824

DO NOT RETURN YOUR PRODUCT TO THE ABOVE ADDRESS.
Please call or write for the location of the LG authorized service center nearest you and for the procedures for obtaining warranty claims.

Table of Contents

Important Notice.....8

Your Phone.....13

Installing the SIM card and battery..15

Getting Started.....15

Charging your phone.....16
Inserting a microSD card.....17
Removing the microSD card.....18
Formatting the microSD card.....18
Switching between and exiting applications.....18
Touch screen tips.....20
Proximity sensor.....20

Your Home screen.....20

Lock your phone.....21
KnockON.....21
Quick Switch to Silent/Vibrate Mode....22
Home Screen Overview.....22
Navigating Through the Home Screen Canvases.....22
Navigating Through the Sub-Menus.....22
Customizing your Home screen.....22
Customizing apps icons on the Home screen.....23
Creating Application Folders on the Home/Apps screen.....24
Customizing the Apps screen.....25
Home screen clean view.....25
Quick access.....26
Notifications.....26
On-screen Keyboard.....29
123 Mode.....31
Entering Special Characters.....31
Using Clip Tray.....31
Text Link.....32
Creating your Google account.....33
Signing into your Google account.....33

Google Account Setup.....33

Making a call.....35
Calling your contacts.....35
Answering and rejecting a call.....35
Adjusting the in-call volume.....35

Calls.....35

Making a second call.....36
Viewing your call logs.....36
Call settings.....36
Searching for a contact.....37
Adding a new contact.....37
Favorite Contacts.....37

Contacts.....37

Joining and Separating Contacts.....38

AT&T Address Book (AAB) 38
Messaging.....39

Messaging/Email 39

Email.....40
Adding an account to your phone 43
Adding a social networking widget on the Home screen 43

Social Networking 43

Viewing and updating your status ...44
Syncing accounts on your phone 44
Removing accounts on your phone ...44
Getting to know the viewfinder 45

Camera and Video 45

Take Pictures 46
Record Videos 46
Camera and Video Settings 46
Multi-point Auto Focus 47
Gesture shot.....47
View Your Pictures 47
Gallery Options.....47
Assign Pictures.....48
Video Options.....48
Play a Video.....49
Live Zoom 49
Dual Play 50
Gallery 51
Music.....51
How to save music/video files to the phone.....51
Playing a song 51

Multimedia.....51

Working with Playlists 52
About Google applications.....54
Launch Google Maps 54

Google Applications 54

Play Store 55
Gmail 56
Hangouts 56
QSlide.....58
QuickMemo+ 58

Utilities 58

QuickRemote 59
SmartShare 60
Setting the alarm 61
Using the calculator 61
Adding an event to your calendar.....61
LG SmartWorld.....61
Browser 63
Using options 63
Adding bookmarks.....63

Table of Contents

The Web 63
Changing the Browser settings.....64
Networks tab.....65
Airplane mode 65
Wi-Fi.....65

Settings.....65
Bluetooth.....67
Data Manager 69
Call 69
Share & connect.....70
Tethering & networks.....71
Sound tab 74
Sound profile 74
Volumes 74
Quiet mode.....74
Ringtone 74
Default notification sound.....74
Ringtone with vibration.....74
Vibration Type 74
Vibrate on tap.....74
Sound effects 74
Message/Call Voice Notifications 74
Display tab 74
Home screen 74
Lock screen.....75
Missed Calls & New Messages 76
Contact Info for Lost Phone.....76

Lock timer 76
Power button instantly locks 76
Home touch buttons.....76
Font type 76
Font size 76
Brightness 76
Notification LED 76
Auto-rotate screen 76
Screen timeout 77
Smart screen 77
Screen-off effect.....77
Daydream 77
General tab.....77
Language & input 77
Location 77
Accounts & sync.....78
Accessibility.....78
One-handed operation 79
Shortcut key 80
Security 80
Guest mode 80
Gestures 81
QuickCircle case.....81
Date & time 81
Storage.....81
Battery.....81
Smart cleaning 82

Browser Bar.....82
Apps 82
Default message app.....82
Backup & reset.....82
Printing.....83
About phone.....83

LG On-Screen Phone.....84

LG PC Suite 86

Phone Software Update.....87
LG Mobile Phone Software update via
Over-the-Air (OTA).....87

Software Update.....87

Trademarks.....88
DivX HD 88

Trademarks 88

Q&A 89

Accessories.....90

For Your Safety 91

Safety Guidelines 96

Important Notice

Please check to see if any problems you have encountered with your phone are described in this section before taking the phone in for service or calling a service representative.

1. Phone Memory

In order to make more memory available, you will have to manage your applications and delete some data, such as applications or messages.

Managing Applications

1 Tap > > **Settings** > **General** tab > **Apps**.

2 Tap one of the available tabs at the top of the screen and select the application you want to uninstall.

3 Tap **Uninstall** and then tap **OK** to confirm that you want to uninstall the desired application.

2. Optimizing Battery Life

You can extend your battery's life between charges by turning off features that you don't need to run constantly in the background. You can also monitor how applications and system resources consume battery power.

To extend the life of your battery

- Turn off radio communications that you aren't using, such as Wi-Fi, Bluetooth, or GPS.
- Wi-Fi will be set to on the first time you use your newly purchased phone.
- Lower screen brightness and set a shorter screen timeout.
- Turn off automatic syncing for Gmail, Calendar, Contacts, and other applications.
- Some applications you have downloaded may cause your battery power to be reduced.
- While using downloaded applications, check the battery charge level.

To view the battery charge level

1 Tap > > **Settings** > **General** tab > **Battery**.

2 The battery status (charging or discharging) and level are displayed on the screen.

To monitor and control what uses the battery

1 Tap > > **Settings** > **General** tab > **Battery** .

2 Tap the battery icon.

3 A list all of the applications or services using

battery power from the greatest amount of energy used to the least amount. You can also use it to turn off applications or services if they are consuming too much power. Tap any of the listed items for more options.

3. Installing an Open Source Operating System

Installing an open source operating system on your phone and not using the operating system provided by the manufacturer can cause your phone to malfunction.

Warning

- If you install and use an operating system other than the one provided by the manufacturer, your phone is no longer covered by the warranty.
- To protect your phone and personal data, download applications only from trusted sources, such as Play Store. If some applications are not properly installed on your phone, your phone may not work properly- or serious errors may occur. You will need to uninstall those applications and all of its data and settings from the phone.

4. Using a Screen Lock

Set a screen lock to secure your phone. To set the screen lock, follow the process below.

Tap > > **Settings** > **Display** tap > **Lock screen** > **Select screen lock** and select a desired screen lock from **Swipe, Face Unlock**, **Knock Code**, **Pattern**, **PIN** and **Password**.

NOTE

- In case that you have trouble with Face Unlock, you can unlock the screen a Backup Pattern or PIN.

Warning

- Take precautions when using an unlock Pattern, PIN, or Password. It is very important that you remember the screen unlock information you set. You are allowed 5 attempts to enter your screen unlock information. If you used up all 5 opportunities, you will have to wait 30 seconds to attempt unlocking the phone again.

When you can't recall your Unlock Pattern, PIN, or Password:

If you logged into a Google account on the phone and failed to use the correct pattern 5 times, tap the **Forgot pattern?**. You will be required to sign in with your Google account and prompted to create a new unlock pattern.

If you have set a backup PIN, you can unlock the screen with keying in the backup PIN.

If you haven't created a Google account on the phone and you forgot your PIN, Password, and the backup PIN, you need to perform a hard reset.

Caution

- If you perform a hard reset, all user applications and user data will be deleted. Please remember to back up any important data before performing a hard reset.

Read ALL steps before attempting.

1 Turn the phone off.

2 Press and hold the following keys at the same time: **Volume Down Key** + **Power/Lock Key** on the back of the phone.

3 Release the **Power/Lock Key** only when the LG logo is displayed, then immediately press and hold the **Power/Lock Key** again.

4 Release all keys when the Factory hard reset screen is displayed.

5 Press the **Volume Down Key** to scroll to **Yes**, then press the **Power/Lock Key** to confirm.

- To cancel the Factory hard reset, select **No (Exit)**.

6 Press the **Volume Down Key** to scroll to **Yes**, then press the **Power/Lock Key** to confirm once more.

7 Your device will perform a hard reset.

5. Using Safe Mode

Using Safe mode

To recover your phone when malfunctioning.

1 Turn off your phone and reboot. When you see the AT&T booting animation press and hold the **Volume Down Key** until you see the Home screen.

OR

While the phone is on, press and hold the **Power/Lock Key** until the Phone

options menu is displayed. Then tap **Power off** and tap **OK**.
Your Home screen will then be displayed with the words "Safe mode" in lower left corner.

2 Tap > > **Settings** > **General** tab > **Apps**.

3 Tap one of the available tabs at the top of the screen and select the application you wish to uninstall.

4 Tap **Uninstall** and **OK** to confirm.

5 After uninstalling the application, reboot your phone.

6. Connecting your phone to a computer via USB

1 Use the USB cable that was provided with your phone to connect the phone to a USB port on your computer. You'll receive a notification that the USB is connected and can see USB connection mode screen.

2 Tap **Media sync (MTP)** or **Send images (PTP)** to confirm that you want to transfer files between your phone and the computer.

When the phone is connected as USB storage, you receive a notification. Your phone is recognized as a device on your computer. You can now copy files to and from the phone.

7. Unlock screen when using data connection

Your screen will go dark if untouched for a period of time when using a data connection. To turn on your LCD screen, press the **Power/Lock Key** . To change the length of time the screen takes to turn off, tap > > **Settings** > **Display** tab > **Screen timeout** and select the desired amount.

8. Internal antenna

Please hold the mobile phone straight up as a regular phone.

While making/receiving calls or sending/receiving data, try to avoid holding the lower part of the phone where the antenna is located. It may affect call quality.

9. When the screen freezes

If the phone does not respond to user input or the screen freezes:

Press and hold the **Power/Lock Key** for 10 seconds to reboot it.

10. Do not connect your phone when you power on/off your PC

Make sure to disconnect your phone from the PC when powering your PC on or off as it might result in PC errors.

11. Hardware key control mode

If your phone display is damaged or broken, you can answer an incoming call, end a call, or turn off an alarm using the hardware keys.

1 Turn your phone off.

2 Press and hold the **Power/Lock Key** and the **Volume Keys** at the same time for more than 6 seconds to enter the Hardware key control mode.

3 Press the **Volume Keys** to scroll to the desired option, then press the **Power/Lock Key** to confirm.

- **Answer a call:** Press the **Volume Keys** at the same time.
- **End a call:** Press the **Power/Lock Key** during a call.
- **Stop an alarm:** When an alarm rings, press and hold the **Volume Up Key** or **Volume Down Key** to stop the alarm.

NOTE

- If you use your phone with a broken display glass, your phone can break even more or you can be injured. Make sure to visit the LG authorized service center to get your phone repaired.

Your Phone

To turn on the phone, press and hold the **Power/Lock Key** on the back side of the phone for 1.5 seconds.

To turn off the phone, press the **Power/Lock Key** on the back side of the phone for 1.5 seconds and tap **Power off** and **OK** to confirm.

Front view

Front Camera Lens

- Use to take a picture of yourself or to video chat on supported applications.

Quick Keys

- Gives you quick access to your most used applications.
- To add an icon, drag and drop it in the bar.
- To remove an icon, touch and hold it and remove it from the bar.

Back Key

- Returns to the previous screen.
- Closes pop-up menus and dialog boxes.

Home Key

- Returns to the Home screen from any screen.
- Touch and hold to access Google Now.

Earpiece

Notification LED

Proximity Sensor

- Senses proximity toward other objects, such as your head during a call, so that you do not accidentally activate unwanted features.

Recent Key

- Access your most recently used applications.
- Touch and hold to displays available options for the current screen or application.

Warning

- Placing a heavy object on the phone or sitting on it can damage its LCD and tap screen functionalities. Do not cover the LCD's proximity sensor with a protective film. This can cause the sensor to malfunction.

TIP

- Tap and hold the **Recent Key** whenever you open an application to check what options are available.

Side view

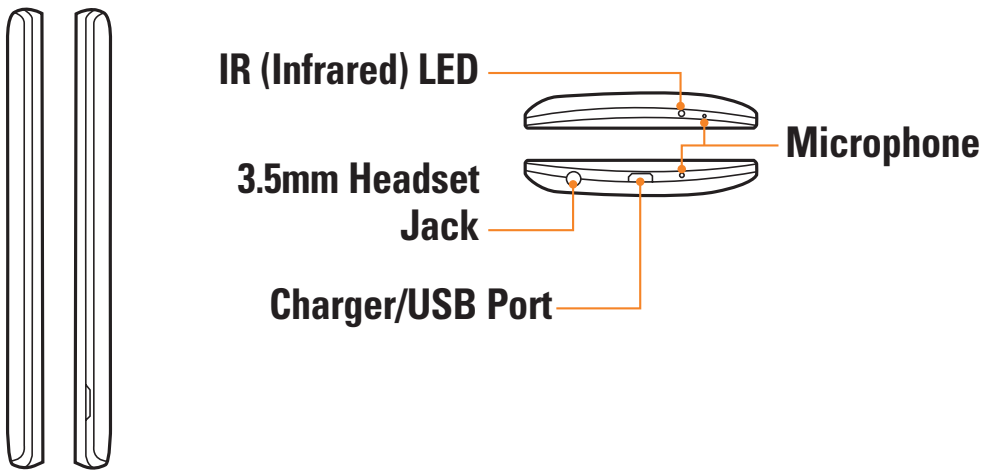

Rear view

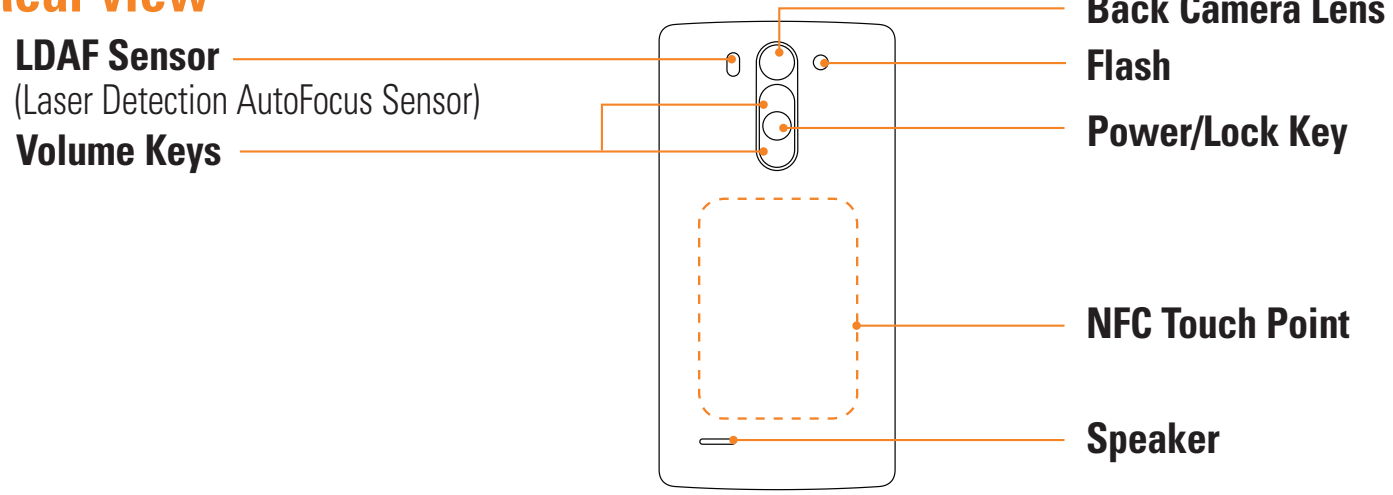

LDAF Sensor (Laser Detection AutoFocus Sensor): By detecting the distance with laser, when you recording with the rear camera lens, LDAF Sensor enables you to focus the long or close range more fast and accurately.

NOTE

- The NFC antenna for this model is on the back cover.

Installing the SIM card and battery

Before you can start exploring your new phone, you'll need to set it up. To insert the SIM card and battery:

1 Hold the phone on your hand firmly. With the other hand, lift the back cover using the fingertip cutout located on the side of the cover and remove it.

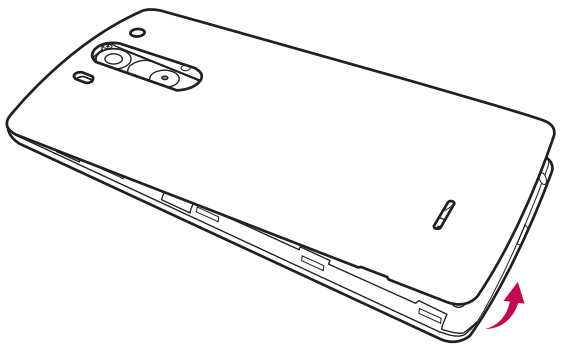

2 Slide the SIM card into the SIM card slot. Make sure the gold contact area on the card is facing downwards.

NOTE

Please insert the notched side of the SIM card first. Refer to the image inscribed below the SIM card slot.

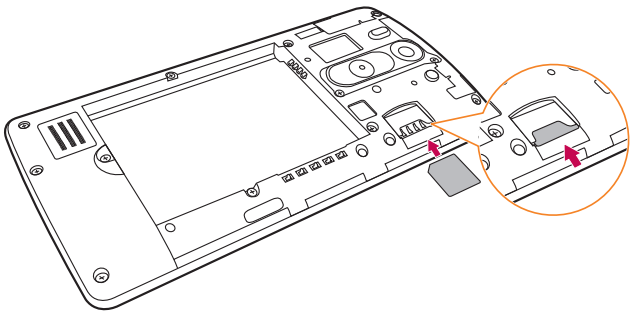

3 Insert the battery into place by aligning the gold contacts on the phone and the battery ❶ and press the battery down until it clicks into place ❷.

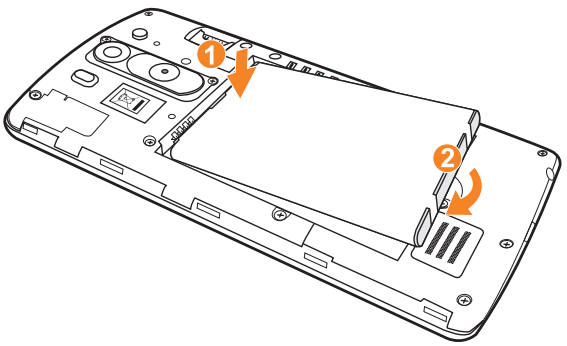

4 Replace the back cover of the phone ❶. Apply a steady downward pressure until the back cover clicks into place ❷.

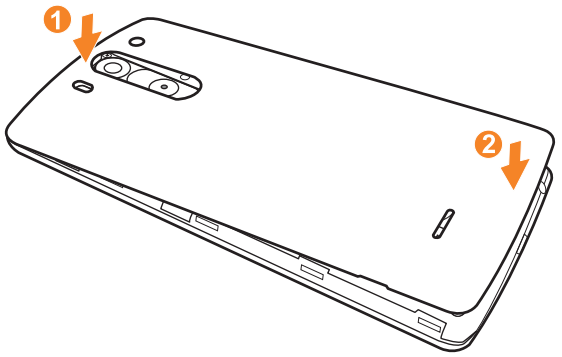

Charging your phone

1 Connect the wall adapter and USB cable as shown below. The USB symbol on the USB cable should face toward you.

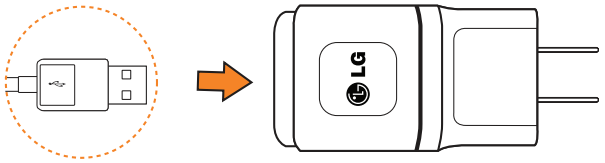

2 Plug the USB cable (as shown below) into the phone's Charger/USB Port. Make sure the USB symbol is facing upwards.

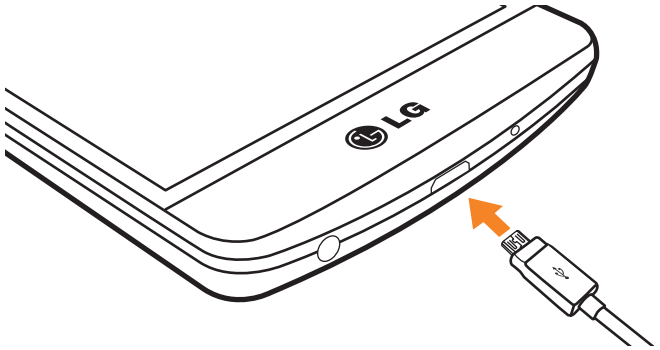

Always unplug the charger from the wall socket after the phone is fully charged to save unnecessary power consumption of the charger.

NOTE

- The battery must be fully charged initially to improve battery lifetime.
- Your phone has an internal antenna. Be careful not to scratch or damage this rear area, as that will cause loss of performance.

Warning

- Use only LG-approved chargers, batteries and cables. When using unapproved chargers or cables, it may cause slow charging. Or, unapproved chargers or cables can cause the battery to explode or damage the device, which are not covered by the warranty.
- Charging may be interrupted when you use a USB hub, which is not retained rated voltage.

Inserting a microSD card

NOTE

This device supports up to a 64GB microSD card.

1 Remove the back cover.

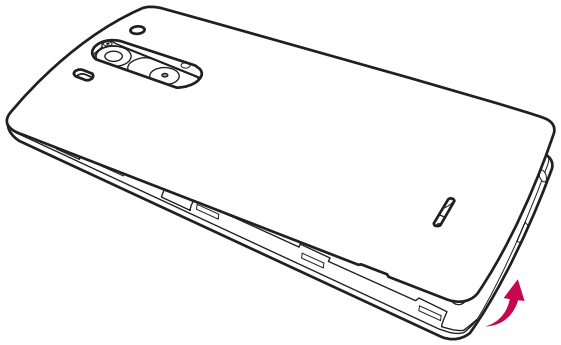

2 Gently insert the microSD card into the slot. Make sure the gold contact area is facing downwards.

NOTE

Please insert the notched side of the microSD card first. Refer to the image next to the microSD card slot.

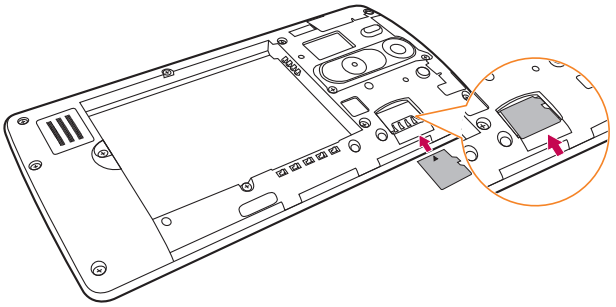

NOTE

Some downloaded applications store data on the microSD card as well as on the phone. Due to this feature, if you skip the unmount procedure, it can cause an error because information between the microSD card and the phone is not accorded properly. In the worst case, the microSD card can be corrupted or damaged.

Removing the microSD card

To safely remove the microSD card from your phone, you must first unmount it.

1 Tap > > **Settings** > **General** tab > **Storage** > **Unmount SD card** > **OK**.

2 Remove the back cover and gently pull the microSD card from the slot.

Warning

Do not remove the microSD card without unmounting it first. Otherwise, it may damage the microSD card as well as your phone, and the data stored on the microSD card may be corrupted.

Formatting the microSD card

Your microSD card may already be formatted. If it isn't, you must format it before you can use it.

NOTE

All files on the card are deleted when you format the microSD card.

1 Tap > > **Settings** > **General** tab > **Storage** > **Unmount SD card** > **OK**.

2 Tap **Erase SD card** twice.

3 If you set an unlock pattern, enter it and tap **Erase everything**. The card will then be formatted and ready to use.

NOTE

If there is content on your microSD card, the folder structure may be different after formatting since all the files will have been deleted.

Switching between and exiting applications

Multi-tasking is easy with Android because open applications keep running even when you open another application. There is no need to quit an application before opening another. Use and switch among several open applications. Android manages each application, stopping and starting them as needed, to ensure that idle applications don't consume resources unnecessarily.

Switching between applications

- Tap the **Recent Key** . A list of recently used applications will be displayed. Then tap the application you want to access.
- To remove an application from the list, swipe the app preview to the left or right.

To stop/exit an application

1 Tap > > **Settings** > **General** tab > **Apps**.

2 Tap one of the tabs at the top of the screen, choose the desired application and tap **Force stop** (or **Stop**) to stop the application.

Touch screen tips

With the tap of your finger, you can access available applications, make menu selections, and access data saved to your phone. The following terms are used for describing the different available actions using the touchscreen:

Tap - A single finger tap selects items, links, shortcuts and letters on the on-screen keyboard.

Touch and hold - Touch and hold an item on the screen by touching it and not lifting your finger until an action occurs. For example, to open a contact's available options, touch and hold the contact in the Contacts list until the context menu opens.

Drag - Touch and hold an item for a moment and then, without lifting your finger, move your finger on the screen until you reach the target position. You can drag items on the Home screen to reposition them.

Swipe or slide - To swipe or slide, quickly move your finger across the surface of the screen, without pausing when you first tap it (so you don't drag an item instead). For example, you can slide the screen up or down to scroll through a list, or browse through the different Home screens by swiping from left to right (and vice versa).

Double-tap - Double-tap to zoom on a Web page or a map. For example, quickly double-tap a section of a Web page to adjust that section to fit the width of the screen. You can also double-tap to zoom in and out when using Maps.

Pinch-to-Zoom - Use your index finger and thumb in a pinch or spread motion to zoom in or out when using the browser, Maps, Camera, or browsing pictures.

Rotate the screen - From many applications and menus, the orientation of the screen adjusts to the device's physical orientation.

NOTE

- To select an item, tap the center of the icon.
- Do not to press too hard; the tap screen is sensitive enough to pick up a light, firm touch.
- Use the tip of your finger to tap the option you want. Be careful not to tap any other keys or icons.

Proximity sensor

When receiving and making calls, this sensor automatically turns the backlight off and locks the tap keypad by sensing when the phone is near your ear. This extends battery life and prevents the tap keypad from activating unintentionally during calls.

Lock your phone

When you are not using the phone, press the **Power/Lock Key** to lock your phone. This helps prevent accidental presses and saves battery power.

Also, if you do not use the phone for a while, the Home screen, or other screen you are viewing, is automatically replaced with the lock screen after 30 seconds (depending on the screen timeout settings) of inactivity to conserve the battery and prevent pocket dialing.

To wake up your phone, press the **Power/Lock Key**. The lock screen will appear. Swipe the screen in any direction to unlock. The last screen you were working on opens.

NOTE

- The automatic screen timeout can be configured manually in Settings. To change it, tap > > **Settings** > **Display** tab > **Screen timeout**.
- If there are any programs running when you lock the phone, they may still be running in lock mode. It is recommended that you exit all programs before entering the lock mode to avoid unnecessary charges (e.g., phone call, web access and data communications).

KnockON

The KnockON feature allows you to double-tap the screen to easily turn it on or off. You can disable this feature in the Gestures settings.

To turn the screen on

1. Double-tap the center of the Lock screen to turn the screen on.
2. Unlock the screen or access any of the available shortcuts or widgets (if available).

To turn the screen off

1. Double-tap an empty area of the Home screen or the Status Bar.
2. The screen will turn off.

NOTE

- Tap on the center area of the screen. If you tap on the bottom or the top area, the recognition rate may decrease.

Quick Switch to Silent/Vibrate Mode

To quickly set your phone to silent or vibrate mode, slide the Status Bar down and tap until or appears.

Home Screen Overview

The main Home screen is the starting point for many applications and functions, and it allows you to add items like application icons, shortcuts, folders or widgets to give you instant access to information and applications. This is the default page and accessible from any menu by tapping the **Home Key**.

On your Home screen, you can view menu icons at the bottom of the screen. Menu icons provide easy and one-touch access to the functions you use the most.

Navigating Through the Home Screen Canvases

Your phone has several Home screen canvases. If you like, you can place different applications on each of the Home screen canvases.

From the main Home screen canvas, swipe the screen with your finger in either direction. The main Home screen canvas is located in the middle. To add more canvases, pinch in on the Home screen and tap +.

You can also customize each canvas with shortcuts, folders, and widgets.

Navigating Through the Sub-Menus

Sub-menus are available when you are at any Home screen or have selected a feature or application such as Phone, Contacts, Messaging or Browser.

1 Tap . A sub-menu displays at the bottom of the phone screen.

2 Tap an option.

Customizing your Home screen

You can customize your Home screen by adding quick access items, such as shortcuts to an application, widgets, or changing the wallpaper.

- **Apps**: Add shortcuts to applications on the Home screen.
- **Widgets**: Add dynamically updating widgets to your Home screen to allow quick access to applications without opening the full application

- **Wallpapers**: Change the Home screen wallpaper.

To add shortcuts to apps or widgets on the Home screen:

1 Select a location (Home screen canvas) to add an item by swiping the Home screen from left to right or vice versa.

2 Touch and hold an empty part of the Home screen.

3 Tap the type of item you want to add on the screen: **Apps** or **Widgets**.

4 Tap the desired app or widget.

5 You will see a new icon on the Home screen. To place it on a different canvas, touch and hold it to drag it to the desired location and release your finger from the screen.

TIP

- To add a preloaded application or an application you have downloaded from Play Store to the Home screen, simply touch and hold the icon you want in the Apps screen and drag it to the desired Home screen canvas.

NOTE

- If there is no available space on a particular Home screen panel, you must delete or remove an item before you can add another item. In this case, you have the option of switching to another Home screen panel.

To delete an application icon

Tap > touch and hold the shortcut icon or widget you want to delete and drag to **Remove** at the top of the screen. When changes to , lift your finger.
You cannot delete the preloaded applications. (Only their icons can be deleted from the screen).

Customizing apps icons on the Home screen

You can create your own custom application icon(s) using the images in your Gallery.

1 Touch and hold an application icon until it's unlocked from its current position. Then drop it on the screen. The editing icon will appear in the upper right corner of the application.

NOTE

- If an icon you placed can be resized, you will see a blue box around the icon after you touch, hold and release it. Drag the edges of the box to resize it.

2 Tap the application icon.

3 Tap the icon design you want from the available **ICON GALLERY** and change the size.

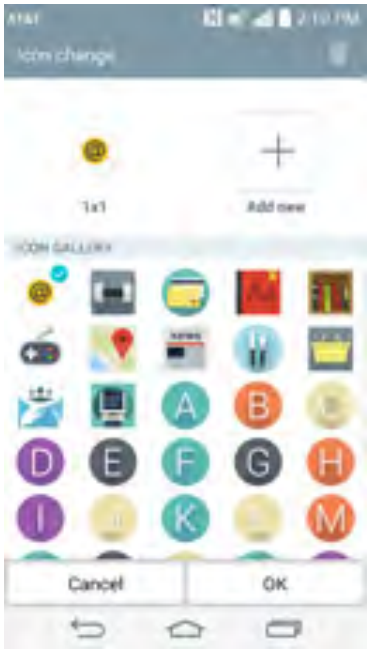

NOTE

- Your customized application icon(s) are only applied to icons on your Home screen. The Applications screen is not affected.
- Your custom photo icons are saved so you can easily select them for any of your icon images.

Creating Application Folders on the Home/Apps screen

You can create application folders to hold similar applications if you wish.

On the Home screen

1 Touch and hold an icon to unlock it from its positions. Then drag it over another icon and release it.

2 A folder will be created.

3 To rename the folder or change its color, open it and tap the folder name.

On the Apps screen

1 Tap > to open the Apps screen.

2 Tap > **Edit**.

NOTE

- A folder cannot be created when the apps are organized by Alphabetical order or Downloaded date.

3 Touch and hold the desired icon to release it from its position.

4 Drag the icon over another icon and release it to create a folder.

Customizing the Apps screen

1 Tap > .

2 Tap the **Apps** tab at the top of the screen to go to the Apps screen, if it is not already selected.

3 Tap to access the following Applications screen options:

- **View apps by:** Tap to sort your applications either in alphabetical order, by downloaded date, or user customized.
- **Show small/large icons:** Tap to change the application icons to either small or large, then tap **Yes** to set your choice.
- **Hide/Show apps:** Tap to set which application icons will be displayed in your Applications screen. Checkmark the icons you want to hide, then tap .
- **Edit/Uninstall apps:** Tap to directly access to Apps Editing screen.
- **Home screen settings:** Tap to directly access to the phone's Home screen settings menu.

Home screen clean view

You can see the wallpaper without items on the Home screen by placing two fingerso on the screen and pinching out. Pinch in or tap the **Back Key** to see applications and widgets again.