FCC CFR47 PART 22 SUBPART H
FCC CFR47 PART 24 SUBPART E
FCC CFR47 PART 27 SUBPART H
FCC CFR47 PART 27 SUBPART L

C2PC CERTIFICATION TEST REPORT

FOR

GSM/WCDMA/LTE PHONE + BLUETOOTH, DTS b/g/n

MODEL NUMBER: LG-H345, LGH345, H345

FCC ID: ZNFH345

REPORT NUMBER: 15I20243-E1

ISSUE DATE: MARCH 24, 2015

Prepared for
LG ELECTRONICS MOBILECOMM U.S.A., INC
1000 SYLVAN AVENUE
ENGLEWOOD CLIFFS,
NEW JERSEY, 07632, U.S.A

Prepared by
UL VERIFICATION SERVICES INC.
47173 BENICIA STREET
FREMONT, CA 94538, U.S.A.
TEL: (510) 771-1000
FAX: (510) 661-0888

NVLAP LAB CODE 200065-0

Revision History

Rev.	Issue Date	Revisions	Revised By
--	03/24/15	Initial Issue	D. Coronia

UL VERIFICATION SERVICES INC. FORM NO: CCSUP4701I
47173 BENICIA STREET, FREMONT, CA 94538, USA TEL: (510) 771-1000 FAX: (510) 661-0888

This report shall not be reproduced except in full, without the written approval of UL Verification Services Inc.

TABLE OF CONTENTS

1. ATTESTATION OF TEST RESULTS 5
2. TEST METHODOLOGY 6
3. FACILITIES AND ACCREDITATION 6
4. CALIBRATION AND UNCERTAINTY 6
4.1. MEASURING INSTRUMENT CALIBRATION 6
4.2. SAMPLE CALCULATION 6
4.3. MEASUREMENT UNCERTAINTY 7
5. EQUIPMENT UNDER TEST 8
5.1. DESCRIPTION OF EUT 8
5.2. MAXIMUM OUTPUT POWER 9
5.3. MAXIMUM OUTPUT POWER (LTE) 10
5.4. DESCRIPTION OF AVAILABLE ANTENNAS 12
5.5. DESCRIPTION OF TEST SETUP 13
6. TEST AND MEASUREMENT EQUIPMENT 16
7. SUMMARY TABLE 17
8. RF POWER OUTPUT VERIFICATION 18
8.1. GSM/GPRS/EDGE 18
8.1.1. GSM OUTPUT POWER RESULT 19
8.2. UMTS REL 99 21
8.2.1. UMTS REL 99 OUTPUT POWER RESULT 21
8.3. UMTS HSDPA 22
8.3.1. UMTS HSDPA OUTPUT POWER RESULT 23
8.4. UMTS HSUPA 25
8.4.1. UMTS HSUPA OUTPUT POWER RESULT 26
8.5. DC-HSDPA 28
8.5.1. UMTS DC-HSDPA OUTPUT POWER RESULT 31
8.6. LTE OUTPUT VERIFICATION 33
8.6.1. LTE OUTPUT RESULT 33
9. RADIATED TEST RESULTS 41
9.1. RADIATED POWER (ERP & EIRP) 41
9.1.1. ERP/EIRP RESULTS 42
9.1.2. LTE ERP/EIRP RESULTS 44

UL VERIFICATION SERVICES INC. FORM NO: CCSUP4701I
47173 BENICIA STREET, FREMONT, CA 94538, USA TEL: (510) 771-1000 FAX: (510) 661-0888

This report shall not be reproduced except in full, without the written approval of UL Verification Services Inc.

9.1.3. ERP/EIRP PLOTS 49
9.2. FIELD STRENGTH OF SPURIOUS RADIATION.....91
9.2.1. SPURIOUS RADIATION PLOTS 93
10. SETUP PHOTOS 135

This report shall not be reproduced except in full, without the written approval of UL Verification Services Inc.

1. ATTESTATION OF TEST RESULTS

COMPANY NAME:	LG ELECTRONICS MOBILECOMM U.S.A., INC.
EUT DESCRIPTION:	GSM/WCDMA/LTE PHONE + BLUETOOTH, DTS b/g/n
MODEL:	LG-H345, LGH345, H345
SERIAL NUMBER:	501KPSL818494, 401KPZK818493, 501KPGS818495
DATE TESTED:	MARCH 13-20, 2015

APPLICABLE STANDARDS	
STANDARD	**TEST RESULTS**
FCC PART 22H, 24E, 27H and 27L	PASS

UL Verification Services Inc. tested the above equipment in accordance with the requirements set forth in the above standards. All indications of Pass/Fail in this report are opinions expressed by UL Verification Services Inc. based on interpretations and/or observations of test results. Measurement Uncertainties were not taken into account and are published for informational purposes only. The test results show that the equipment tested is capable of demonstrating compliance with the requirements as documented in this report.

Note: The results documented in this report apply only to the tested sample, under the conditions and modes of operation as described herein. This document may not be altered or revised in any way unless done so by UL Verification Services Inc. and all revisions are duly noted in the revisions section. Any alteration of this document not carried out by UL Verification Services Inc. will constitute fraud and shall nullify the document. This report must not be used by the client to claim product certification, approval, or endorsement by NVLAP, NIST, any agency of the Federal Government, or any agency of any government.

Approved & Released For
UL Verification Services Inc. By:

DAN CORONIA
CONSUMER TECHNOLOGY DIVISION
WiSE PROJECT LEAD
UL VERIFICATION SERVICES INC

Tested By:

STEVEN TRAN
CONSUMER TECHNOLOGY DIVISION
WiSE LAB ENGINEER
UL VERIFICATION SERVICES INC

This report shall not be reproduced except in full, without the written approval of UL Verification Services Inc.

2. TEST METHODOLOGY

The tests documented in this report were performed in accordance with TIA-603-C, FCC CFR 47 Part 22, FCC CFR Part 24, and FCC CFR 47 Part 27.

3. FACILITIES AND ACCREDITATION

The test sites and measurement facilities used to collect data are located at 47173 and 47266 Benicia Street, Fremont, California, USA. Line conducted emissions are measured only at the 47173 address. The following table identifies which facilities were utilized for radiated emission measurements documented in this report. Specific facilities are also identified in the test results sections.

47173 Benicia Street	47266 Benicia Street
☒ Chamber A(IC: 2324B-1)	☐ Chamber D(IC: 2324B-4)
☐ Chamber B(IC: 2324B-2)	☐ Chamber E(IC: 2324B-5)
☒ Chamber C(IC: 2324B-3)	☐ Chamber F(IC: 2324B-6)
	☒ Chamber G(IC: 2324B-7)
	☐ Chamber H(IC: 2324B-8)

UL Verification Services Inc. is accredited by NVLAP, Laboratory Code 200065-0. The full scope of accreditation can be viewed at http://ts.nist.gov/standards/scopes/2000650.htm.

4. CALIBRATION AND UNCERTAINTY

4.1. MEASURING INSTRUMENT CALIBRATION

The measuring equipment utilized to perform the tests documented in this report has been calibrated in accordance with the manufacturer's recommendations, and is traceable to recognized national standards

4.2. SAMPLE CALCULATION

Where relevant, the following sample calculation is provided:

EIRP = PSA reading with EUT worst orientation (dBm) + Path loss (dB) – cable loss(between the SG and substitution antenna) + Substitution Antenna Factor (dBi)

ERP = PSA reading with EUT worst orientation (dBm) + Path loss (dB) – cable loss(between the SG and substitution antenna)

(Path loss = Signal generator output – PSA reading with substitution antenna)

This report shall not be reproduced except in full, without the written approval of UL Verification Services Inc.

4.3. MEASUREMENT UNCERTAINTY

Where relevant, the following measurement uncertainty levels have been estimated for tests performed on the apparatus:

PARAMETER	UNCERTAINTY
Conducted Disturbance, 0.15 to 30 MHz	3.52 dB
Radiated Disturbance, 30 to 1000 MHz	4.94 dB

Uncertainty figures are valid to a confidence level of 95%.

UL VERIFICATION SERVICES INC. FORM NO: CCSUP4701I
47173 BENICIA STREET, FREMONT, CA 94538, USA TEL: (510) 771-1000 FAX: (510) 661-0888

This report shall not be reproduced except in full, without the written approval of UL Verification Services Inc.

5. EQUIPMENT UNDER TEST

5.1. DESCRIPTION OF EUT

The EUT is a GSM/WCDMA/LTE PHONE + BLUETOOTH, DTS b/g/n

UL VERIFICATION SERVICES INC. FORM NO: CCSUP4701I
47173 BENICIA STREET, FREMONT, CA 94538, USA TEL: (510) 771-1000 FAX: (510) 661-0888

This report shall not be reproduced except in full, without the written approval of UL Verification Services Inc.

5.2. MAXIMUM OUTPUT POWER

The transmitter has a maximum peak conducted and radiated ERP / EIRP output powers as follows:

FCC Part 22/24						
Band	Frequency Range(MHz)	Modulation	Conducted		Radiated	
			AVG(dBm)	AVG(mW)	AVG(dBm)	AVG(mW)
GSM850	824~849	GMSK	33.2	2089.30		
	824~849	GPRS	33.2	2089.30	31.12	1294.20
	824~849	EGPRS	33.2	2089.30	26.08	405.51
GSM1900	1850~1910	GMSK	30.7	1174.90		
	1850~1910	GPRS	30.7	1174.90	31.20	1318.26
	1850~1910	EGPRS	30.7	1174.90	28.80	758.58
Band 5	824~849	REL99	24.1	257.04	20.92	123.59
	824~849	HSDPA	24.1	257.04	20.58	114.29
	824~849	HSUPA	23.3	213.80		
Band 4	1710~1755	REL99	23.6	229.09	26.68	465.46
	1710~1755	HSDPA	23.6	229.09	26.62	459.07
	1710~1755	HSUPA	23.6	229.09		
Band 2	1850~1910	REL99	23.5	223.87	26.40	436.52
	1850~1910	HSDPA	23.5	223.87	26.60	457.09
	1850~1910	HSUPA	22.2	165.96		

This report shall not be reproduced except in full, without the written approval of UL Verification Services Inc.

5.3. MAXIMUM OUTPUT POWER (LTE)

LTE Band 12

FCC Part 27							
Band	Frequency Range(MHz)	BandWidth (MHz)	Modulation	Conducted		Radiated	
				AVG(dBm)	AVG(mW)	AVG(dBm)	AVG(mW)
LTE12	699~716	10MHz	QPSK	24.2	263.03	21.40	138.04
			16QAM	22.7	186.21	20.00	100.00
		5MHz	QPSK	24.2	263.03	20.90	123.03
			16QAM	23.2	208.93	19.50	89.13
		3MHz	QPSK	24.2	263.03	21.30	134.90
			16QAM	23.2	208.93	20.20	104.71
		1.4MHz	QPSK	24.2	263.03	21.00	125.89
			16QAM	23.2	208.93	20.00	100.00

LTE Band 4

FCC Part 27							
Band	Frequency Range(MHz)	BandWidth (MHz)	Modulation	Conducted		Radiated	
				AVG(dBm)	AVG(mW)	AVG(dBm)	AVG(mW)
LTE4	1710~1755	20MHz	QPSK	23.7	234.42	26.24	420.73
			16QAM	22.7	186.21	24.94	311.89
		15MHz	QPSK	23.7	234.42	26.10	407.38
			16QAM	22.7	186.21	24.14	259.42
		10MHz	QPSK	23.7	234.42	26.34	430.53
			16QAM	22.7	186.21	25.24	334.20
		5MHz	QPSK	23.7	234.42	25.47	352.37
			16QAM	22.7	186.21	24.24	265.46
		3MHz	QPSK	23.7	234.42	25.38	345.14
			16QAM	22.7	186.21	24.34	271.64
		1.4MHz	QPSK	23.6	229.09	25.34	341.98
			16QAM	22.7	186.21	24.20	263.03

UL VERIFICATION SERVICES INC. FORM NO: CCSUP4701I
47173 BENICIA STREET, FREMONT, CA 94538, USA TEL: (510) 771-1000 FAX: (510) 661-0888
This report shall not be reproduced except in full, without the written approval of UL Verification Services Inc.

LTE Band 2

FCC Part 24							
Band	Frequency Range(MHz)	BandWidth (MHz)	Modulation	Conducted		Radiated	
				AVG(dBm)	AVG(mW)	AVG(dBm)	AVG(mW)
LTE2	1850~1910	20MHz	QPSK	23.6	229.09	27.24	529.66
			16QAM	22.7	186.21	26.44	440.55
		15MHz	QPSK	23.5	223.87	27.39	548.28
			16QAM	22.7	186.21	25.94	392.64
		10MHz	QPSK	23.7	234.42	27.17	521.19
			16QAM	22.4	173.78	26.37	433.51
		5MHz	QPSK	23.7	234.42	26.69	466.66
			16QAM	22.4	173.78	25.68	369.83
		3MHz	QPSK	23.7	234.42	27.34	542.00
			16QAM	22.7	186.21	26.24	420.73
		1.4MHz	QPSK	23.3	213.80	26.99	500.03
			16QAM	22.7	186.21	26.39	435.51

UL VERIFICATION SERVICES INC. FORM NO: CCSUP4701I
47173 BENICIA STREET, FREMONT, CA 94538, USA TEL: (510) 771-1000 FAX: (510) 661-0888
This report shall not be reproduced except in full, without the written approval of UL Verification Services Inc.

5.4. DESCRIPTION OF AVAILABLE ANTENNAS

The radio utilizes a PIFA antenna for the [List the bands supported] with a maximum peak gain as follow:

Frequency (MHz)	Peak Gain (dBi)
GSM850, 824~849MHz	-1.0
GSM1900, 1850~1910MHz	2.2
WCDMA B2, 1850~1910MHz	2.2
WCDMA B4, 1710~1755MHz	2.4
WCDMA B5, 824~849MHz	-1.0
LTE B2, 1850~1910MHz	2.2
LTE B4, 1710~1755MHz	2.4
LTE B12, 699~716MHz	-1.0

This report shall not be reproduced except in full, without the written approval of UL Verification Services Inc.

5.5. DESCRIPTION OF TEST SETUP

SUPPORT EQUIPMENT

Support Equipment List				
Description	Manufacturer	Model	Serial Number	FCC ID
AC Adapter	LG	MCS-02WR	RA4Y1031433	N/A
Earphone	LG	N/A	N/A	N/A

I/O CABLES (CONDUCTED SETUP)

I/O Cable List						
Cable No	Port	# of identical ports	Connector Type	Cable Type	Cable Length (m)	Remarks
1	RF Out	1	Spectrum Analyzer	Shielded	None	NA
2	Antenna Port	1	EUT	Shielded	0.1m	NA
3	RF In/Out	1	Communication Test Set	Shielded	1m	NA

I/O CABLES (RADIATED SETUP)

I/O CABLE LIST						
Cable No.	Port	# of Identical Ports	Connector Type	Cable Type	Cable Length	Remarks
1	USB	1	AC Adapter	Un-shielded	1.2m	NA
2	Jack	1	Headset	Shielded	1m	NA
3	RF In/out	1	Communication Test Set	Un-shielded	2m	NA

TEST SETUP

The EUT is continuously communicated to the call box during the tests.

This report shall not be reproduced except in full, without the written approval of UL Verification Services Inc.

SETUP DIAGRAM FOR TESTS (CONDUCTED TEST SETUP)

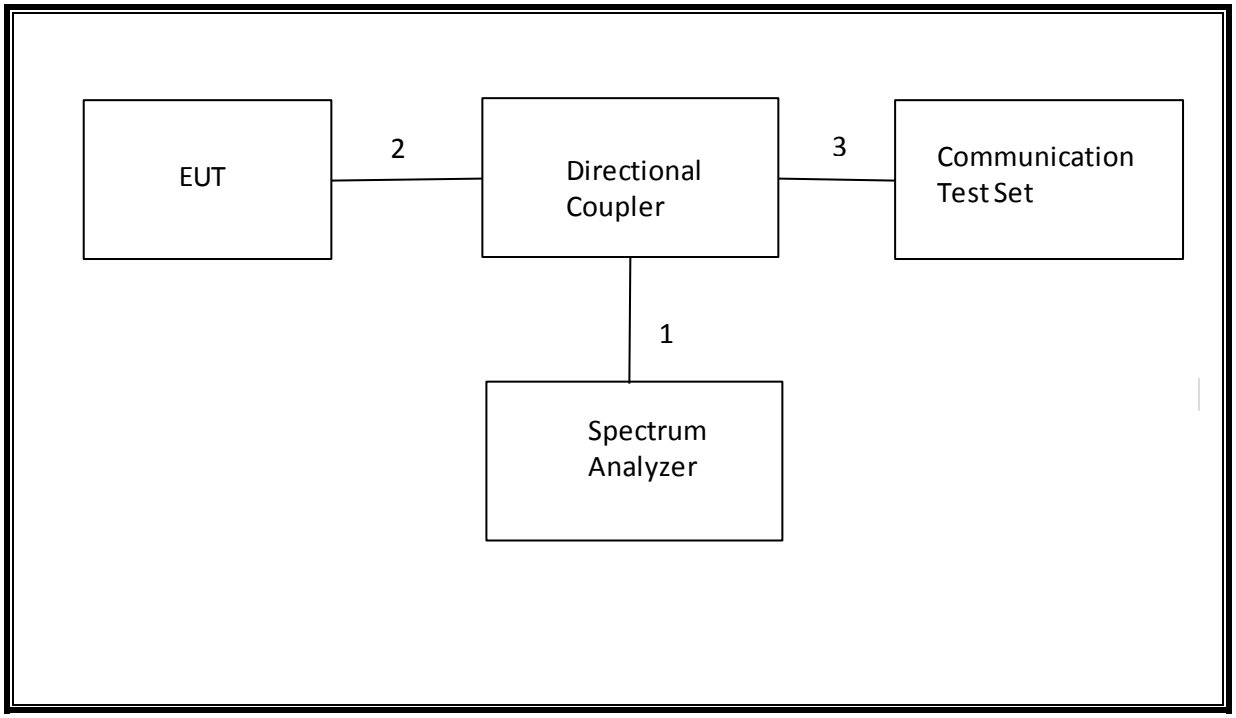

UL VERIFICATION SERVICES INC. FORM NO: CCSUP4701I
47173 BENICIA STREET, FREMONT, CA 94538, USA TEL: (510) 771-1000 FAX: (510) 661-0888
This report shall not be reproduced except in full, without the written approval of UL Verification Services Inc.

SETUP DIAGRAM FOR TESTS (RADIATED TEST SETUP)

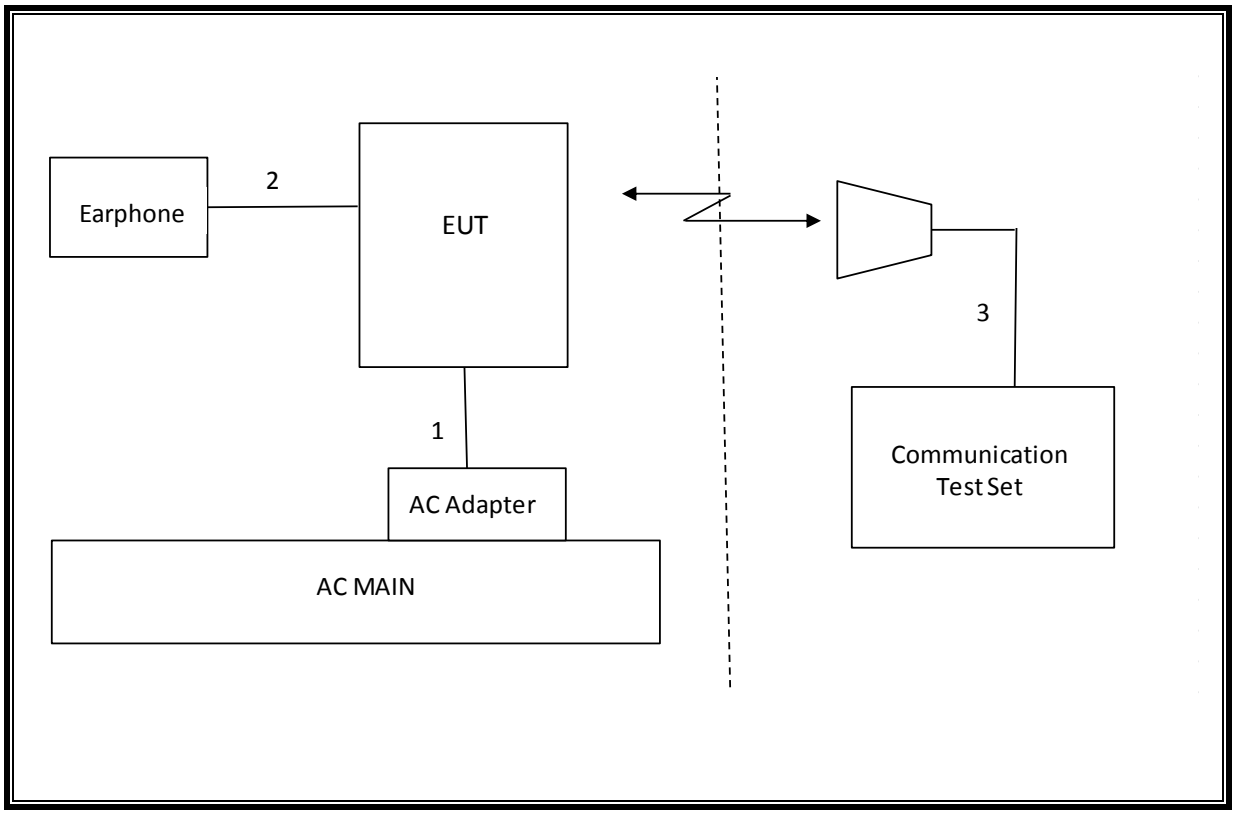

UL VERIFICATION SERVICES INC. FORM NO: CCSUP4701I
47173 BENICIA STREET, FREMONT, CA 94538, USA TEL: (510) 771-1000 FAX: (510) 661-0888
This report shall not be reproduced except in full, without the written approval of UL Verification Services Inc.

6. TEST AND MEASUREMENT EQUIPMENT

The following test and measurement equipment was utilized for the tests documented in this report:

TEST EQUIPMENT LIST				
Description	Manufacturer	Model	Asset	Cal Due
Spectrum Analyzer, 44 GHz	Agilent / HP	E4446A	123	10/28/15
Antenna, Bilog, 2 GHz	Sunol Sciences	JB1	C01011	04/22/15
Antenna, Horn, 18 GHz	EMCO	3115	C00783	10/25/15
Antenna, Horn, 18 GHz	EMCO	3115	C00784	10/25/15
Highpass Filter, 2.7 GHz	Micro-Tronics	HPM13194	N02687	CNR
Highpass Filter, 1.5 GHz	Micro-Tronics	HPM13193	N02688	CNR
Temperature / Humidity Chamber	Thermotron	SE 600-10-10	C00930	05/12/15
Communications Test Set	R&S	CMW500	T159	07/02/15
DC power supply, 8 V @ 3 A or 15 V	Agilent / HP	E3610A	None	CNR
Vector signal generator, 6 GHz	Agilent / HP	E4438C	None	06/18/15
Antenna, Tuned Dipole 400~1000	ETS	6502	158071	10/14/15
Directional Coupler	RF-Lambda	RFDC5M06G15	None	CNR
Antenna, Horn, 26.5 GHz	ARA	MWH-1826/B	C00589	12/17/15

Test Software List			
Description	Manufacturer	Model	Version
Radiated Software	UL	UL EMC	Version 9.5, 07/22/14
Conducted Software	UL	UL EMC	Version 9.5, 05/17/14
CLT Software	UL	UL RF	Version 1.0, 02/02/15
Antenna Port Software	UL	UL RF	Version 2.1.1.1, 1/20/15

This report shall not be reproduced except in full, without the written approval of UL Verification Services Inc.

7. SUMMARY TABLE

C2PC reason: Please see LG FCC Class II Change Description letter for details.

FCC Part Section	RSS Section(s)	Test Description	Test Limit	Test Condition	Test Result	Note
2.1049	N/A	Occupied Band width (99%)	N/A	Conducted	Pass	See Original
22.917(a) 24.238(a) 27.53(g) 90.691	RSS-132(4.5.1) RSS-133(6.5.1) RSS-139(6.5.1)	Band Edge / Conducted Spurious Emission	-13dBm		Pass	See Original
2.1046	N/A	Conducted output power	N/A		Pass	See Original
22.355 24.235 27.54 90.213	RSS-132(4.3) RSS-133(6.3) RSS-139(6.3) RSS-199(4.3)	Frequency Stability	2.5PPM		Pass	See Original
22.913(a)(2)	RSS-132(4.4)	Effective Radiated Power	38 dBm	Radiated	Pass	31.1 dBm
27.50(c)(10)	N/A		34.77 dBm		Pass	21.4 dBm
24.232(c) 27.50(h)(2)	RSS-133(6.4) RSS-199(4.4)	Equivalent Isotropic Radiated Power	33dBm		Pass	31.2 dBm
27.50(d)(4)	RSS-139(6.4)		30dBm		Pass	26.2 dBm
22.917(a) 24.238(a) 27.53(g)	RSS-132(4.5.1) RSS-133(6.5.1) RSS-139(6.5.1)	Radiated Spurious Emission	-13dBm		Pass	-22.6 dBm

UL VERIFICATION SERVICES INC. FORM NO: CCSUP4701I
47173 BENICIA STREET, FREMONT, CA 94538, USA TEL: (510) 771-1000 FAX: (510) 661-0888

This report shall not be reproduced except in full, without the written approval of UL Verification Services Inc.

8. RF POWER OUTPUT VERIFICATION

8.1. GSM/GPRS/EDGE

Function: Menu select > GSM Mobile Station > GSM 850/900/1800/1900

Press Connection control to choose the different menus

Press RESET > choose all to reset all settings

Connection Press Signal Off to turn off the signal and change settings

Network Support > GSM+GPRS or GSM+EGPRS

Main Service > Packet Data

Service selection > Test Mode A – Auto Slot Config. off

MS Signal Press Slot Config bottom on the right twice to select and change the number of time slots and power setting

> Slot configuration > Uplink/Gamma

> 33 dBm for GPRS 850/900

> 30 dBm for GPRS1800/1900

BS Signal Enter the same channel number for TCH channel (test channel) and BCCH channel

Frequency Offset > + 0 Hz

Mode > BCCH and TCH

BCCH Level > -85 dBm (May need to adjust if link is not stable)

BCCH Channel > choose desire test channel [Enter the same channel number for TCH channel (test channel) and BCCH channel]

Channel Type > Off

P0> 4 dB

Slot Config > Unchanged (if already set under MS Signal)

TCH > choose desired test channel

Hopping > Off

Main Timeslot > 3 (Default)

Network Coding Scheme > CS4 (GPRS) and MCS5 ~ MCS9 (EGPRS)

Bit Stream > 2E9-1PSR Bit Pattern

AF/RF Enter appropriate offsets for Ext. Att. Output and Ext. Att. Input

Connection Press Signal On to turn on the signal and change settings

UL VERIFICATION SERVICES INC. FORM NO: CCSUP4701I
47173 BENICIA STREET, FREMONT, CA 94538, USA TEL: (510) 771-1000 FAX: (510) 661-0888

This report shall not be reproduced except in full, without the written approval of UL Verification Services Inc.

8.1.1. GSM OUTPUT POWER RESULT

Mode	Coding Scheme	Time Slots	Ch No.	Freq. (MHz)	Burst Pwr (dBm)
GSM (Voice)	CS1	1	128	824.2	33.2
			190	836.6	33.2
			251	848.8	33.2
GPRS (GMSK)	CS1	1	128	824.2	33.2
			190	836.6	33.2
			251	848.8	33.2
		2	128	824.2	31.3
			190	836.6	31.2
			251	848.8	30.9
		3	128	824.2	29.0
			190	836.6	29.0
			251	848.8	28.9
		4	128	824.2	27.5
			190	836.6	27.5
			251	848.8	27.4
EGPRS (8PSK)	MCS5	1	128	824.2	27.5
			190	836.6	27.5
			251	848.8	27.4
		2	128	824.2	25.4
			190	836.6	25.4
			251	848.8	25.3
		3	128	824.2	23.9
			190	836.6	23.9
			251	848.8	23.8
		4	128	824.2	22.8
			190	836.6	22.8
			251	848.8	22.7

UL VERIFICATION SERVICES INC. FORM NO: CCSUP4701I
47173 BENICIA STREET, FREMONT, CA 94538, USA TEL: (510) 771-1000 FAX: (510) 661-0888
This report shall not be reproduced except in full, without the written approval of UL Verification Services Inc.

Mode	Coding Scheme	Time Slots	Ch No.	Freq. (MHz)	Burst Pwr (dBm)
GSM (Voice)	CS1	1	512	1850.2	30.7
			661	1880.0	30.7
			810	1909.8	30.7
GPRS (GMSK)	CS1	1	512	1850.2	30.7
			661	1880.0	30.7
			810	1909.8	30.7
		2	512	1850.2	28.7
			661	1880.0	28.7
			810	1909.8	28.7
		3	512	1850.2	26.7
			661	1880.0	26.7
			810	1909.8	26.7
		4	512	1850.2	25.1
			661	1880.0	25.3
			810	1909.8	25.1
EGPRS (8PSK)	MCS5	1	512	1850.2	26.1
			661	1880.0	26.2
			810	1909.8	26.1
		2	512	1850.2	24.0
			661	1880.0	24.0
			810	1909.8	24.0
		3	512	1850.2	22.4
			661	1880.0	22.4
			810	1909.8	22.3
		4	512	1850.2	21.2
			661	1880.0	21.2
			810	1909.8	21.2

UL VERIFICATION SERVICES INC. FORM NO: CCSUP4701I
47173 BENICIA STREET, FREMONT, CA 94538, USA TEL: (510) 771-1000 FAX: (510) 661-0888
This report shall not be reproduced except in full, without the written approval of UL Verification Services Inc.

8.2. UMTS REL 99

TEST PROCEDURE

The following summary of these settings are illustrated below:

	Mode	Rel99
	Subtest	-
WCDMA General Settings	Loopback Mode	Test Mode 1
	Rel99 RMC	12.2kbps RMC
	HSDPA FRC	Not Applicable
	HSUPA Test	Not Applicable
	Power Control Algorithm	Algorithm2
	βc	Not Applicable
	βd	Not Applicable
	βec	Not Applicable
	βc/βd	8/15
	βhs	Not Applicable
	βed	Not Applicable

8.2.1. UMTS REL 99 OUTPUT POWER RESULT

Band	Mode	UL Ch No.	Freq. (MHz)	MPR	Avg Pwr (dBm)
W-CDMA Band V	Rel 99 (RMC, 12.2 kbps)	4132	826.4	0	24.1
		4183	836.6	0	24.0
		4233	846.6	0	24.0

Band	Mode	UL Ch No.	Freq. (MHz)	MPR	Avg Pwr (dBm)
W-CDMA Band IV	Rel 99 (RMC, 12.2 kbps)	1312	1712.4	0	23.6
		1413	1732.6	0	23.6
		1513	1752.6	0	23.6

Band	Mode	UL Ch No.	Freq. (MHz)	MPR	Avg Pwr (dBm)
W-CDMA Band II	Rel 99 (RMC, 12.2 kbps)	9262	1852.4	0	23.5
		9400	1880.0	0	23.4
		9538	1907.6	0	23.5

UL VERIFICATION SERVICES INC. FORM NO: CCSUP4701I
47173 BENICIA STREET, FREMONT, CA 94538, USA TEL: (510) 771-1000 FAX: (510) 661-0888
This report shall not be reproduced except in full, without the written approval of UL Verification Services Inc.

8.3. UMTS HSDPA

The following 4 Sub-tests were completed according to Release 5 procedures in section 5.2 of 3GPP TS34.121. A summary of these settings are illustrated below:

	Mode	Rel5 HSDPA			
	Subtest	1	2	3	4
WCDMA General Settings	Loopback Mode	Test Mode 1			
	Rel99 RMC	12.2kbps RMC			
	HSDPA FRC	H-Set1			
	Power Control Algorithm	Algorithm 2			
	βc	2/15	12/15	15/15	15/15
	βd	15/15	15/15	8/15	4/15
	Bd (SF)	64			
	βc/βd	2/15	12/15	15/8	15/4
	βhs	4/15	24/15	30/15	30/15
	MPR (dB)	0	0	0.5	0.5
HSDPA Specific Settings	D_{ACK}	8			
	D_{NAK}	8			
	DCQI	8			
	Ack-Nack repetition factor	3			
	CQI Feedback (Table 5.2B.4)	4ms			
	CQI Repetition Factor (Table 5.2B.4)	2			
	Ahs =βhs/βc	30/15			

UL VERIFICATION SERVICES INC. FORM NO: CCSUP4701I
47173 BENICIA STREET, FREMONT, CA 94538, USA TEL: (510) 771-1000 FAX: (510) 661-0888
This report shall not be reproduced except in full, without the written approval of UL Verification Services Inc.

8.3.1. UMTS HSDPA OUTPUT POWER RESULT

Band	Mode	UL Ch No.	Freq. (MHz)	MPR	Avg Pwr (dBm)
W-CDMA Band V	Subtest 1	4132	826.4	0	24.1
		4183	836.6	0	24.0
		4233	846.6	0	24.1
	Subtest 2	4132	826.4	0	24.1
		4183	836.6	0	24.1
		4233	846.6	0	24.1
	Subtest 3	4132	826.4	0.5	23.7
		4183	836.6	0.5	23.5
		4233	846.6	0.5	23.7
	Subtest 4	4132	826.4	0.5	23.7
		4183	836.6	0.5	23.6
		4233	846.6	0.5	23.7

Band	Mode	UL Ch No.	Freq. (MHz)	MPR	Avg Pwr (dBm)
W-CDMA Band IV	Subtest 1	1312	1712.4	0	23.6
		1413	1732.6	0	23.6
		1513	1752.6	0	23.6
	Subtest 2	1312	1712.4	0	23.6
		1413	1732.6	0	23.6
		1513	1752.6	0	23.6
	Subtest 3	1312	1712.4	0.5	23.2
		1413	1732.6	0.5	23.2
		1513	1752.6	0.5	23.1
	Subtest 4	1312	1712.4	0.5	23.2
		1413	1732.6	0.5	23.2
		1513	1752.6	0.5	23.2

This report shall not be reproduced except in full, without the written approval of UL Verification Services Inc.

Band	Mode	UL Ch No.	Freq. (MHz)	MPR	Avg Pwr (dBm)
W-CDMA Band II	Subtest 1	9262	1852.4	0	23.5
		9400	1880.0	0	23.4
		9538	1907.6	0	23.5
	Subtest 2	9262	1852.4	0	23.5
		9400	1880.0	0	23.4
		9538	1907.6	0	23.5
	Subtest 3	9262	1852.4	0.5	23.0
		9400	1880.0	0.5	23.0
		9538	1907.6	0.5	23.0
	Subtest 4	9262	1852.4	0.5	23.0
		9400	1880.0	0.5	23.0
		9538	1907.6	0.5	23.1

This report shall not be reproduced except in full, without the written approval of UL Verification Services Inc.

8.4. UMTS HSUPA

TEST PROCEDURE

The following summary of these settings are illustrated below: (ETSI TS 134.121-1 Table C.11.1)

	Mode	Rel6 HSUPA	Rel6 HSUPA	Rel6 HSUPA	Rel6 HSUPA	Rel6 HSUPA
	Subtest	1	2	3	4	5
WCDMA General Settings	Loopback Mode	Test Mode 1				
	P-CPICH (dB)	-10				
	P-CCPCH (dB)	-12				
	SCH (dB)	-12				
	PICH(dB)	-15				
	DPCH (dB)	-9				
	HS-SCCH_1 (dB)	-8				
	HS-PDSCH (dB)	-3				
	Rel99 RMC	12.2kbps RMC				
	HSDPA FRC	H-Set1				
	HSUPA Test	HSUPA Loopback				
	Power Control Algorithm	Algorithm2				
	Bc	11/15	6/15	15/15	2/15	15/15
	Bd	15/15	15/15	9/15	15/15	15/15
	Bec	209/225	12/15	30/15	2/15	5/15
	βc/βd	11/15	6/15	15/9	2/15	15/15
	Bhs	22/15	12/15	30/15	4/15	30/15
	βed (note1)	1309/225	94/75	47/15 47/15	56/75	134/15
	MPR	0	2	1	2	0
HSDPA Specific Settings	DACK	8				
	DNAK	8				
	DCQI	8				
	Ack-Nack repetition factor	3				
	CQI Feedback (Table 5.2B.4)	4ms				
	CQI Repetition Factor (Table 5.2B.4)	2				
	Ahs = βhs/βc	30/15				
HSUPA Specific Settings	D E-DPCCH	6	8	8	5	7
	DHARQ	0	0	0	0	0
	AG Index	20	12	15	17	21
	Reference E-TFCIs	5	5	2	5	5
	ETFCI (from 34.121 Table C.11.1.3)	75	67	92	71	81
	Associated Max UL Data Rate kbps	242.1	174.9	482.8	205.8	308.9
	Reference E_TFCIs	E-TFCI 11 E-TFCI PO 4 E-TFCI 67 E-TFCI PO 18 E-TFCI 71 E-TFCI PO 23 E-TFCI 75 E-TFCI PO 26 E-TFCI 81 E-TFCI PO 27		E-TFCI 11 E-TFCI PO 4 E-TFCI 92 E-TFCI PO 18	E-TFCI 11 E-TFCI PO 4 E-TFCI 67 E-TFCI PO 18 E-TFCI 71 E-TFCI PO 23 E-TFCI 75 E-TFCI PO 26 E-TFCI 81 E-TFCI PO 27	

Note1: βed cannot be set directly, it is set by Absolute Grant Value.

UL VERIFICATION SERVICES INC. FORM NO: CCSUP4701I
47173 BENICIA STREET, FREMONT, CA 94538, USA TEL: (510) 771-1000 FAX: (510) 661-0888
This report shall not be reproduced except in full, without the written approval of UL Verification Services Inc.

8.4.1. UMTS HSUPA OUTPUT POWER RESULT

Band	Mode	UL Ch No.	Freq. (MHz)	MPR	Avg Pwr (dBm)
W-CDMA Band V	Subtest 1	4132	826.4	0	23.1
		4183	836.6	0	23.3
		4233	846.6	0	23.3
	Subtest 2	4132	826.4	2	22.2
		4183	836.6	2	22.2
		4233	846.6	2	21.9
	Subtest 3	4132	826.4	1	22.9
		4183	836.6	1	23.0
		4233	846.6	1	22.7
	Subtest 4	4132	826.4	2	22.2
		4183	836.6	2	22.2
		4233	846.6	2	22.2
	Subtest 5	4132	826.4	0	24.1
		4183	836.6	0	24.0
		4233	846.6	0	24.0

Band	Mode	UL Ch No.	Freq. (MHz)	MPR	Avg Pwr (dBm)
W-CDMA Band IV	Subtest 1	1312	1712.4	0	23.5
		1413	1732.6	0	23.6
		1513	1752.6	0	23.6
	Subtest 2	1312	1712.4	2	21.7
		1413	1732.6	2	21.7
		1513	1752.6	2	21.7
	Subtest 3	1312	1712.4	1	22.7
		1413	1732.6	1	22.5
		1513	1752.6	1	22.6
	Subtest 4	1312	1712.4	2	21.7
		1413	1732.6	2	21.7
		1513	1752.6	2	21.7
	Subtest 5	1312	1712.4	0	23.5
		1413	1732.6	0	23.6
		1513	1752.6	0	23.6

This report shall not be reproduced except in full, without the written approval of UL Verification Services Inc.

Band	Mode	UL Ch No.	Freq. (MHz)	MPR	Avg Pwr (dBm)
W-CDMA Band II	Subtest 1	9262	1852.4	0	22.7
		9400	1880.0	0	23.2
		9538	1907.6	0	22.7
	Subtest 2	9262	1852.4	2	21.7
		9400	1880.0	2	21.7
		9538	1907.6	2	21.7
	Subtest 3	9262	1852.4	1	22.1
		9400	1880.0	1	22.1
		9538	1907.6	1	22.2
	Subtest 4	9262	1852.4	2	21.7
		9400	1880.0	2	21.7
		9538	1907.6	2	21.7
	Subtest 5	9262	1852.4	0	23.5
		9400	1880.0	0	23.5
		9538	1907.6	0	23.5

UL VERIFICATION SERVICES INC. FORM NO: CCSUP4701I
47173 BENICIA STREET, FREMONT, CA 94538, USA TEL: (510) 771-1000 FAX: (510) 661-0888
This report shall not be reproduced except in full, without the written approval of UL Verification Services Inc.

8.5. DC-HSDPA

The following tests were completed according to procedures in section 7.3.13 of 3GPP TS34.108 v9.5.0. A summary of these settings are illustrated below:

Downlink Physical Channels are set as per 3GPP TS34.121-1 v9.0.0 E.5.0

Table E.5.0: Levels for HSDPA connection setup

Parameter During Connection setup	Unit	Value
P-CPICH_Ec/Ior	dB	-10
P-CCPCH and SCH_Ec/Ior	dB	-12
PICH _Ec/Ior	dB	-15
HS-PDSCH	dB	off
HS-SCCH_1	dB	off
DPCH_Ec/Ior	dB	-5
OCNS_Ec/Ior	dB	-3.1

Call is set up as per 3GPP TS34.108 v9.5.0 sub clause 7.3.13

The configurations of the fixed reference channels for HSDPA RF tests are described in 3GPP TS 34.121, annex C for FDD and 3GPP TS 34.122.

UL VERIFICATION SERVICES INC. FORM NO: CCSUP4701I
47173 BENICIA STREET, FREMONT, CA 94538, USA TEL: (510) 771-1000 FAX: (510) 661-0888

This report shall not be reproduced except in full, without the written approval of UL Verification Services Inc.

Table C.8.1.12: Fixed Reference Channel H-Set 12

Parameter	Unit	Value
Nominal Avg. Inf. Bit Rate	kbps	60
Inter-TTI Distance	TTI's	1
Number of HARQ Processes	Processes	6
Information Bit Payload (N_{INF})	Bits	120
Number Code Blocks	Blocks	1
Binary Channel Bits Per TTI	Bits	960
Total Available SML's in UE	SML's	19200
Number of SML's per HARQ Proc.	SML's	3200
Coding Rate		0.15
Number of Physical Channel Codes	Codes	1
Modulation		QPSK
Note 1: The RMC is intended to be used for DC-HSDPA mode and both cells shall transmit with identical parameters as listed in the table. Note 2: Maximum number of transmission is limited to 1, i.e., retransmission is not allowed. The redundancy and constellation version 0 shall be used.		

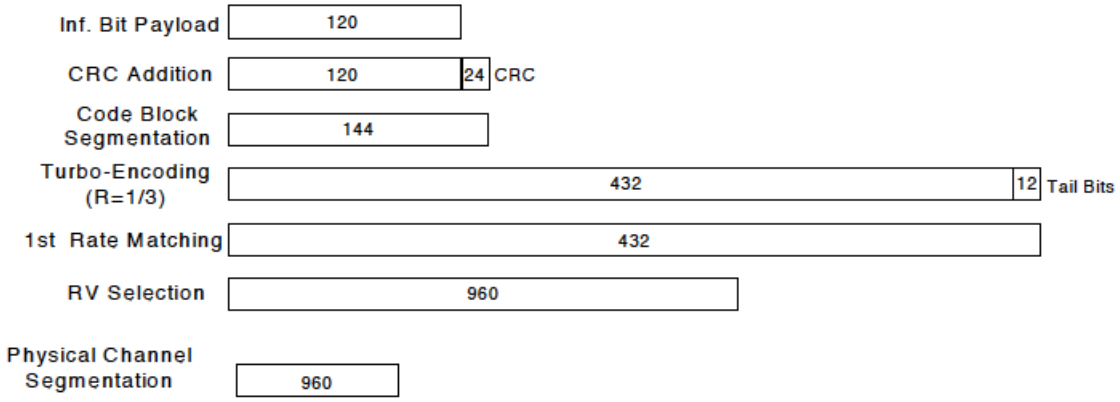

Figure C.8.19: Coding rate for Fixed reference Channel H-Set 12 (QPSK)

This report shall not be reproduced except in full, without the written approval of UL Verification Services Inc.

The following 4 Sub-tests for HSDPA were completed according to Release 6 procedures in section 5.2 of 3GPP TS34.121. A summary of subtest settings are illustrated below:

	Mode	Rel6 HSDPA	Rel6 HSDPA	Rel6 HSDPA	Rel6 HSDPA
	Subtest	1	2	3	4
WCDMA General Settings	Loopback Mode	Test Mode 1			
	Rel99 RMC	12.2kbps RMC			
	HSDPA FRC	H-Set1			
	Power Control Algorithm	Algorithm2			
	βc	2/15	12/15	15/15	15/15
	βd	15/15	15/15	8/15	4/15
	βd (SF)	64			
	βc/βd	2/15	12/15	15/8	15/4
	βhs	4/15	24/15	30/15	30/15
	MPR	0	0	0.5	0.5
HSDPA Specific Settings	DACK	8			
	DNAK	8			
	DCQI	8			
	Ack-Nack Repetition factor	3			
	CQI Feedback	4ms			
	CQI Repetition Factor	2			
	Ahs = βhs/ βc	30/15			

Up commands are set continuously to set the UE to Max power.

UL VERIFICATION SERVICES INC. FORM NO: CCSUP4701I
47173 BENICIA STREET, FREMONT, CA 94538, USA TEL: (510) 771-1000 FAX: (510) 661-0888

This report shall not be reproduced except in full, without the written approval of UL Verification Services Inc.

8.5.1. UMTS DC-HSDPA OUTPUT POWER RESULT

Band	Mode	UL Ch No.	Freq. (MHz)	MPR	Avg Pwr (dBm)
W-CDMA Band V	Subtest 1	4132	826.4	0	24.1
		4183	836.6	0	24.0
		4233	846.6	0	24.1
	Subtest 2	4132	826.4	0	24.1
		4183	836.6	0	24.1
		4233	846.6	0	24.1
	Subtest 3	4132	826.4	0.5	23.7
		4183	836.6	0.5	23.5
		4233	846.6	0.5	23.7
	Subtest 4	4132	826.4	0.5	23.7
		4183	836.6	0.5	23.6
		4233	846.6	0.5	23.7

Band	Mode	UL Ch No.	Freq. (MHz)	MPR	Avg Pwr (dBm)
W-CDMA Band IV	Subtest 1	1312	1712.4	0	23.6
		1413	1732.6	0	23.6
		1513	1752.6	0	23.6
	Subtest 2	1312	1712.4	0	23.6
		1413	1732.6	0	23.6
		1513	1752.6	0	23.6
	Subtest 3	1312	1712.4	0.5	23.2
		1413	1732.6	0.5	23.2
		1513	1752.6	0.5	23.1
	Subtest 4	1312	1712.4	0.5	23.2
		1413	1732.6	0.5	23.2
		1513	1752.6	0.5	23.2

UL VERIFICATION SERVICES INC. FORM NO: CCSUP4701I
47173 BENICIA STREET, FREMONT, CA 94538, USA TEL: (510) 771-1000 FAX: (510) 661-0888
This report shall not be reproduced except in full, without the written approval of UL Verification Services Inc.

Band	Mode	UL Ch No.	Freq. (MHz)	MPR	Avg Pwr (dBm)
W-CDMA Band II	Subtest 1	9262	1852.4	0	23.5
		9400	1880.0	0	23.4
		9538	1907.6	0	23.5
	Subtest 2	9262	1852.4	0	23.5
		9400	1880.0	0	23.4
		9538	1907.6	0	23.5
	Subtest 3	9262	1852.4	0.5	23.0
		9400	1880.0	0.5	23.0
		9538	1907.6	0.5	23.0
	Subtest 4	9262	1852.4	0.5	23.0
		9400	1880.0	0.5	23.0
		9538	1907.6	0.5	23.1

This report shall not be reproduced except in full, without the written approval of UL Verification Services Inc.

8.6. LTE OUTPUT VERIFICATION

8.6.1. LTE OUTPUT RESULT

LTE Band 2

Band	BW (MHz)	Mode	RB Allocation	RB offset	Target MPR	Avg Pwr (dBm)		
						18700	18900	19100
						1860 MHz	1880 MHz	1900 MHz
LTE Band 2	20	QPSK	1	0	0	23.6	23.6	23.6
			1	49	0	23.6	23.6	23.4
			1	99	0	23.4	23.5	23.4
			50	0	1	22.4	22.4	22.5
			50	25	1	22.4	22.4	22.4
			50	49	1	22.3	22.3	22.5
			100	0	1	22.3	22.3	22.3
		16QAM	1	0	1	22.0	22.0	22.7
			1	49	1	21.9	22.2	22.3
			1	99	1	21.8	22.3	22.1
			50	0	2	21.3	21.4	21.5
			50	25	2	21.4	21.4	21.4
			50	49	2	21.4	21.4	21.4
			100	0	2	21.4	21.3	21.3
Band	BW (MHz)	Mode	RB Allocation	RB offset	Target MPR	Avg Pwr (dBm)		
						18675	18900	19125
						1857.5 MHz	1880 MHz	1902.5 MHz
LTE Band 2	15	QPSK	1	0	0	23.3	23.5	23.6
			1	37	0	23.4	23.6	23.7
			1	74	0	23.4	23.6	23.5
			36	0	1	22.4	22.3	22.5
			36	18	1	22.4	22.4	22.5
			36	35	1	22.4	22.4	22.5
			75	0	1	22.3	22.3	22.4
		16QAM	1	0	1	22.1	22.5	22.6
			1	37	1	22.6	21.9	22.7
			1	74	1	22.4	22.0	22.2
			36	0	2	21.3	21.4	21.6
			36	18	2	21.3	21.4	21.5
			36	35	2	21.3	21.4	21.6
			75	0	2	21.3	21.4	21.5

UL VERIFICATION SERVICES INC. FORM NO: CCSUP4701I
47173 BENICIA STREET, FREMONT, CA 94538, USA TEL: (510) 771-1000 FAX: (510) 661-0888
This report shall not be reproduced except in full, without the written approval of UL Verification Services Inc.

Band	BW (MHz)	Mode	RB Allocation	RB offset	Target MPR	Avg Pwr (dBm)		
						18650	18900	19150
						1855 MHz	1880 MHz	1905 MHz
LTE Band 2	10	QPSK	1	0	0	23.5	23.3	23.5
			1	24	0	23.5	23.3	23.4
			1	49	0	23.3	23.2	23.4
			25	0	1	22.5	22.3	22.5
			25	12	1	22.4	22.3	22.5
			25	24	1	22.5	22.4	22.5
			50	0	1	22.4	22.3	22.5
		16QAM	1	0	1	22.7	22.7	22.6
			1	24	1	22.7	22.7	22.7
			1	49	1	22.5	22.6	22.7
			25	0	2	21.4	21.5	21.7
			25	12	2	21.3	21.4	21.7
			25	24	2	21.4	21.3	21.6
			50	0	2	21.3	21.5	21.5

Band	BW (MHz)	Mode	RB Allocation	RB offset	Target MPR	Avg Pwr (dBm)		
						18625	18900	19175
						1852.5 MHz	1880 MHz	1907.5 MHz
LTE Band 2	5	QPSK	1	0	0	23.2	23.1	23.6
			1	12	0	23.4	23.3	23.7
			1	24	0	23.2	23.2	23.4
			12	0	1	22.4	22.3	22.4
			12	6	1	22.4	22.3	22.4
			12	11	1	22.4	22.4	22.3
			25	0	1	22.4	22.4	22.5
		16QAM	1	0	1	21.8	21.5	22.0
			1	12	1	22.3	21.9	22.1
			1	24	1	21.5	21.7	22.4
			12	0	2	21.2	21.3	21.5
			12	6	2	21.3	21.3	21.5
			12	11	2	21.3	21.0	21.2
			25	0	2	21.5	21.4	21.4

This report shall not be reproduced except in full, without the written approval of UL Verification Services Inc.

Band	BW (MHz)	Mode	RB Allocation	RB offset	Target MPR	Avg Pwr (dBm)		
						18615	18900	19185
						1851.5 MHz	1880 MHz	1908.5 MHz
LTE Band 2	3	QPSK	1	0	0	23.3	23.1	23.4
			1	7	0	23.3	23.7	23.3
			1	14	0	23.3	23.2	23.2
			6	0	1	22.2	22.2	22.4
			6	3	1	22.2	22.2	22.3
			6	5	1	22.3	22.2	22.2
			15	0	1	22.3	22.3	22.3
		16QAM	1	0	1	22.5	22.0	21.8
			1	7	1	22.7	22.3	21.9
			1	14	1	22.6	22.7	22.5
			6	0	2	21.0	20.8	21.5
			6	3	2	21.3	21.0	21.5
			6	5	2	21.5	21.1	21.4
			15	0	2	21.3	21.2	21.3

Band	BW (MHz)	Mode	RB Allocation	RB offset	Target MPR	Avg Pwr (dBm)		
						18607	18900	19193
						1850.7 MHz	1880 MHz	1909.3 MHz
LTE Band 2	1.4	QPSK	1	0	0	23.2	23.1	23.3
			1	2	0	23.3	23.1	23.3
			1	5	0	23.3	23.0	23.2
			3	0	0	23.3	23.1	23.3
			3	1	0	23.3	23.2	23.4
			3	2	0	23.3	23.2	23.3
			6	0	1	22.2	22.2	22.2
		16QAM	1	0	1	22.7	21.9	22.2
			1	2	1	22.6	21.9	22.3
			1	5	1	22.7	22.0	22.2
			3	0	1	22.3	21.2	21.5
			3	1	1	22.2	21.2	21.7
			3	2	1	22.3	21.8	21.8
			6	0	2	21.4	20.9	21.2

UL VERIFICATION SERVICES INC. FORM NO: CCSUP4701I
47173 BENICIA STREET, FREMONT, CA 94538, USA TEL: (510) 771-1000 FAX: (510) 661-0888
This report shall not be reproduced except in full, without the written approval of UL Verification Services Inc.

LTE Band 4

Band	BW (MHz)	Mode	RB Allocation	RB offset	Target MPR	Avg Pwr (dBm)		
						20050	20175	20300
						1720 MHz	1732.5 MHz	1745 MHz
LTE Band 4	20	QPSK	1	0	0	23.7	23.7	23.7
			1	49	0	23.7	23.7	23.7
			1	99	0	23.5	23.7	23.3
			50	0	1	22.7	22.7	22.7
			50	25	1	22.7	22.7	22.7
			50	49	1	22.6	22.7	22.7
			100	0	1	22.7	22.7	22.7
		16QAM	1	0	1	22.6	22.7	22.6
			1	49	1	22.6	22.7	22.7
			1	99	1	22.0	22.5	22.4
			50	0	2	21.7	21.7	21.7
			50	25	2	21.6	21.7	21.7
			50	49	2	21.5	21.7	21.7
			100	0	2	21.7	21.7	21.7

Band	BW (MHz)	Mode	RB Allocation	RB offset	Target MPR	Avg Pwr (dBm)		
						20025	20175	20325
						1717.5 MHz	1732.5 MHz	1747.5 MHz
LTE Band 4	15	QPSK	1	0	0	23.7	23.7	23.7
			1	37	0	23.7	23.7	23.7
			1	74	0	23.7	23.7	23.7
			36	0	1	22.7	22.7	22.7
			36	18	1	22.7	22.7	22.7
			36	35	1	22.7	22.7	22.7
			75	0	1	22.7	22.7	22.7
		16QAM	1	0	1	22.7	22.7	22.7
			1	37	1	22.7	22.7	22.7
			1	74	1	22.1	22.3	22.4
			36	0	2	21.7	21.6	21.7
			36	18	2	21.7	21.6	21.7
			36	35	2	21.5	21.5	21.7
			75	0	2	21.7	21.7	21.7

This report shall not be reproduced except in full, without the written approval of UL Verification Services Inc.

Band	BW (MHz)	Mode	RB Allocation	RB offset	Target MPR	Avg Pwr (dBm)		
						20000	20175	20350
						1715 MHz	1732.5 MHz	1750 MHz
LTE Band 4	10	QPSK	1	0	0	23.6	23.6	23.7
			1	24	0	23.6	23.6	23.7
			1	49	0	23.5	23.4	23.7
			25	0	1	22.7	22.7	22.7
			25	12	1	22.7	22.7	22.7
			25	24	1	22.6	22.6	22.7
			50	0	1	22.6	22.7	22.7
		16QAM	1	0	1	22.7	22.7	22.7
			1	24	1	22.7	22.7	22.7
			1	49	1	22.7	22.7	22.7
			25	0	2	21.5	21.6	21.7
			25	12	2	21.5	21.7	21.7
			25	24	2	21.4	21.6	21.7
			50	0	2	21.6	21.7	21.7

Band	BW (MHz)	Mode	RB Allocation	RB offset	Target MPR	Avg Pwr (dBm)		
						19975	20175	20375
						1712.5 MHz	1732.5 MHz	1752.5 MHz
LTE Band 4	5	QPSK	1	0	0	23.4	23.6	23.6
			1	12	0	23.5	23.7	23.7
			1	24	0	23.4	23.6	23.5
			12	0	1	22.7	22.7	22.7
			12	6	1	22.6	22.7	22.6
			12	11	1	22.6	22.7	22.7
			25	0	1	22.6	22.7	22.7
		16QAM	1	0	1	22.7	22.4	22.7
			1	12	1	22.3	22.7	22.7
			1	24	1	22.7	22.7	22.1
			12	0	2	21.7	21.7	21.7
			12	6	2	21.6	21.7	21.7
			12	11	2	21.6	21.7	21.7
			25	0	2	21.6	21.6	21.7

This report shall not be reproduced except in full, without the written approval of UL Verification Services Inc.

Band	BW (MHz)	Mode	RB Allocation	RB offset	Target MPR	Avg Pwr (dBm)		
						19965	20175	20385
						1711.5 MHz	1732.5 MHz	1753.5 MHz
LTE Band 4	3	QPSK	1	0	0	23.5	23.7	23.7
			1	7	0	23.5	23.6	23.6
			1	14	0	23.5	23.6	23.7
			6	0	1	22.6	22.7	22.6
			6	3	1	22.7	22.7	22.7
			6	5	1	22.6	22.7	22.6
			15	0	1	22.6	22.7	22.7
		16QAM	1	0	1	22.7	22.4	22.7
			1	7	1	22.7	22.6	22.7
			1	14	1	22.7	22.7	22.3
			6	0	2	21.5	21.6	21.4
			6	3	2	21.5	21.6	21.4
			6	5	2	21.5	21.6	21.4
			15	0	2	21.6	21.6	21.6

Band	BW (MHz)	Mode	RB Allocation	RB offset	Target MPR	Avg Pwr (dBm)		
						19957	20175	20393
						1710.7 MHz	1732.5 MHz	1754.3 MHz
LTE Band 4	1.4	QPSK	1	0	0	23.5	23.3	23.6
			1	2	0	23.3	23.5	23.5
			1	5	0	23.4	23.3	23.5
			3	0	0	23.6	23.6	23.6
			3	1	0	23.5	23.7	23.5
			3	2	0	23.5	23.7	23.6
			6	0	1	22.6	22.7	22.6
		16QAM	1	0	1	22.6	22.3	21.9
			1	2	1	22.6	22.7	22.7
			1	5	1	22.6	22.7	22.7
			3	0	1	21.9	22.7	22.2
			3	1	1	21.9	22.7	22.4
			3	2	1	22.5	22.7	22.4
			6	0	2	21.3	21.7	21.6

UL VERIFICATION SERVICES INC. FORM NO: CCSUP4701I
47173 BENICIA STREET, FREMONT, CA 94538, USA TEL: (510) 771-1000 FAX: (510) 661-0888
This report shall not be reproduced except in full, without the written approval of UL Verification Services Inc.

LTE Band 12

Band	BW (MHz)	Mode	RB Allocation	RB offset	Target MPR	Avg Pwr (dBm)		
						23060	23095	23130
						704 MHz	707.5 MHz	711 MHz
LTE Band 12	10	QPSK	1	0	0	24.1	24.1	24.20
			1	25	0	24.1	24.2	24.10
			1	49	0	24.2	24.1	24.00
			25	0	1	23.1	23.1	23.20
			25	12	1	23.1	23.1	23.10
			25	25	1	23.1	23.0	23.10
			50	0	1	23.1	23.1	23.10
		16QAM	1	0	1	22.6	22.5	22.70
			1	25	1	22.6	22.5	22.80
			1	49	1	22.6	22.5	22.70
			25	0	2	22.1	22.2	22.20
			25	12	2	22.2	22.2	22.20
			25	25	2	22.1	22.1	22.00
			50	0	2	22.2	22.1	22.00

Band	BW (MHz)	Mode	RB Allocation	RB offset	Target MPR	Avg Pwr (dBm)		
						23035	23095	23155
						701.5 MHz	707.5 MHz	713.5 MHz
LTE Band 12	5	QPSK	1	0	0	24.0	24.2	24.2
			1	12	0	24.1	24.2	24.2
			1	24	0	24.1	24.1	24.2
			12	0	1	23.0	23.2	23.1
			12	6	1	23.1	23.1	23.1
			12	11	1	23.1	23.1	23.1
			25	0	1	23.1	23.2	23.1
		16QAM	1	0	1	23.2	22.9	23.2
			1	12	1	22.9	23.2	23.2
			1	24	1	22.4	23.2	23.1
			12	0	2	22.0	22.2	22.2
			12	6	2	22.2	22.2	22.2
			12	11	2	22.2	22.2	22.2
			25	0	2	22.2	22.1	22.2

UL VERIFICATION SERVICES INC. FORM NO: CCSUP4701I
47173 BENICIA STREET, FREMONT, CA 94538, USA TEL: (510) 771-1000 FAX: (510) 661-0888
This report shall not be reproduced except in full, without the written approval of UL Verification Services Inc.

Band	BW (MHz)	Mode	RB Allocation	RB offset	Target MPR	Avg Pwr (dBm)		
						23025	23095	23165
						700.5 MHz	707.5 MHz	714.5 MHz
LTE Band 12	3	QPSK	1	0	0	24.0	24.0	24.0
			1	7	0	24.2	24.2	24.2
			1	14	0	24.1	24.0	24.0
			6	0	1	23.0	23.0	23.0
			6	3	1	23.1	23.2	23.1
			6	5	1	23.1	23.1	23.1
			15	0	1	23.1	23.1	23.1
		16QAM	1	0	1	22.8	22.2	22.9
			1	7	1	22.8	23.2	22.9
			1	14	1	23.2	22.3	23.2
			6	0	2	22.2	22.2	22.2
			6	3	2	22.2	22.2	22.2
			6	5	2	22.2	22.2	22.2
			15	0	2	22.1	22.1	22.2

Band	BW (MHz)	Mode	RB Allocation	RB offset	Target MPR	Avg Pwr (dBm)		
						23017	23095	23173
						699.7 MHz	707.5 MHz	715.3 MHz
LTE Band 12	1.4	QPSK	1	0	0	23.9	24.1	24.0
			1	2	0	24.1	24.1	24.1
			1	5	0	24.2	24.2	24.1
			3	0	0	24.2	24.2	24.2
			3	1	0	24.1	24.2	24.0
			3	2	0	24.2	24.2	24.1
			6	0	1	23.1	23.0	23.0
		16QAM	1	0	1	23.2	23.2	23.2
			1	2	1	23.0	23.2	23.2
			1	5	1	23.2	23.2	23.2
			3	0	1	23.1	22.6	22.9
			3	1	1	22.9	23.0	22.5
			3	2	1	22.9	23.1	22.4
			6	0	2	22.1	21.9	21.8

This report shall not be reproduced except in full, without the written approval of UL Verification Services Inc.

9. RADIATED TEST RESULTS

9.1. RADIATED POWER (ERP & EIRP)

RULE PART(S)

FCC: §2.1046, §22.913, §24.232, and §27.

LIMITS

22.913(a) - The ERP of mobile transmitters and auxiliary test transmitters must not exceed 7 Watts.

24.232(c) - Mobile/portable stations are limited to 2 watts e.i.r.p. peak power and the equipment must employ means to limit the power to the minimum necessary for successful communications.

27.50(c) - (10) Portable stations (hand-held devices) are limited to 3 watts ERP; (LTE B17)

27.50(d) - (4) Fixed, mobile, and portable (hand-held) stations operating in the 1710-1755 MHz band and mobile and portable stations operating in the 1695-1710 MHz and 1755-1780 MHz bands are limited to 1 watt EIRP.(Band 4)

In addition, when the transmitter power is measured in terms of average value, the peak-to-average ratio of the power shall not exceed 13dB.

MODES TESTED

GSM, WCDMA, and LTE

TEST RESULTS

UL VERIFICATION SERVICES INC. FORM NO: CCSUP4701I
47173 BENICIA STREET, FREMONT, CA 94538, USA TEL: (510) 771-1000 FAX: (510) 661-0888

This report shall not be reproduced except in full, without the written approval of UL Verification Services Inc.

9.1.1. ERP/EIRP RESULTS

WCDMA

Band	Mode	Channel	f(MHz)	ERP / EIRP	
				dBm	mW
Band 2	REL99	9262	1852.4	25.90	389.05
		9400	1880	26.50	446.68
		9538	1907.6	26.40	436.52
	HSDPA	9262	1852.4	26.00	398.11
		9400	1880	26.60	457.09
		9538	1907.6	26.30	426.58

Band	Mode	Channel	f(MHz)	ERP / EIRP	
				dBm	mW
Band 4	REL99	1312	1712.4	25.81	380.88
		1413	1732.6	26.68	465.46
		1513	1752.6	25.57	360.33
	HSDPA	1312	1712.4	25.59	362.06
		1413	1732.6	26.62	459.07
		1513	1752.6	24.97	313.83

Band	Mode	Channel	f(MHz)	ERP / EIRP	
				dBm	mW
Band 5	REL99	4132	826.4	20.55	113.50
		4183	836.6	20.82	120.78
		4233	846.6	20.92	123.59
	HSDPA	4132	826.4	20.58	114.29
		4183	836.6	20.88	122.46
		4233	846.6	21.06	127.64

UL VERIFICATION SERVICES INC. FORM NO: CCSUP4701I
47173 BENICIA STREET, FREMONT, CA 94538, USA TEL: (510) 771-1000 FAX: (510) 661-0888
This report shall not be reproduced except in full, without the written approval of UL Verification Services Inc.

GSM

Band	Mode	Channel	f(MHz)	ERP / EIRP	
				dBm	mW
GSM1900	GPRS	512	1850.2	31.00	1258.93
		661	1880	31.20	1318.26
		810	1909.8	31.20	1318.26
	EGPRS	512	1850.2	28.60	724.44
		661	1880	28.80	758.58
		810	1909.8	27.90	616.6

Band	Mode	Channel	f(MHz)	ERP / EIRP	
				dBm	mW
GSM850	GPRS	128	824.2	29.48	887.16
		190	836.6	30.26	1061.70
		251	848.8	31.12	1294.20
	EGPRS	128	824.2	26.08	405.51
		190	836.6	26.11	408.32
		251	848.8	27.92	619.44

This report shall not be reproduced except in full, without the written approval of UL Verification Services Inc.

9.1.2. LTE ERP/EIRP RESULTS

LTE Band 12

Band	BW (MHz)	Mode	RB/RB Size	f (MHz)	ERP / EIRP	
					dBm	mW
LTE12	10	QPSK	1/0	704	21.10	128.82
			1/0	707.5	20.80	120.23
			1/0	711	21.40	138.04
		16QAM	1/0	704	19.80	95.5
			1/0	707.5	19.60	91.2
			1/0	711	20.00	100
	5	QPSK	1/0	701.5	20.80	120.23
			1/0	707.5	20.67	116.68
			1/0	713.5	20.90	123.03
		16QAM	1/0	701.5	19.40	87.1
			1/0	707.5	19.36	86.3
			1/0	713.5	19.50	89.13
	3	QPSK	1/0	700.5	20.80	120.23
			1/0	707.5	21.30	134.9
			1/0	714.5	20.90	123.03
		16QAM	1/0	700.5	19.70	93.33
			1/0	707.5	20.20	104.71
			1/0	714.5	19.70	93.33
	1.4	QPSK	1/0	699.7	20.80	120.23
			1/0	707.5	21.00	125.89
			1/0	715.3	20.80	120.23
		16QAM	1/0	699.7	19.90	97.72
			1/0	707.5	20.00	100
			1/0	715.3	19.90	97.72

This report shall not be reproduced except in full, without the written approval of UL Verification Services Inc.

LTE Band 4

Band	BW (MHz)	Mode	RB/RB Size	f (MHz)	ERP / EIRP	
					dBm	mW
LTE4	20	QPSK	1/0	1720	25.29	337.71
			1/0	1732.5	25.05	319.75
			1/0	1745	26.24	420.53
		16QAM	1/0	1720	23.79	239.08
			1/0	1732.5	23.53	225.48
			1/0	1745	24.94	311.75
	15	QPSK	1/0	1717.5	24.89	307.99
			1/0	1732.5	25.27	336.59
			1/0	1747.5	26.10	407.19
		16QAM	1/0	1717.5	22.99	198.86
			1/0	1732.5	23.57	227.56
			1/0	1747.5	24.14	259.3
	10	QPSK	1/0	1715	24.69	294.13
			1/0	1732.5	24.03	252.99
			1/0	1750	26.34	430.33
		16QAM	1/0	1715	22.69	185.58
			1/0	1732.5	22.47	176.65
			1/0	1750	25.24	334.04

UL VERIFICATION SERVICES INC. FORM NO: CCSUP4701I
47173 BENICIA STREET, FREMONT, CA 94538, USA TEL: (510) 771-1000 FAX: (510) 661-0888
This report shall not be reproduced except in full, without the written approval of UL Verification Services Inc.

Band	BW (MHz)	Mode	RB/RB Size	f (MHz)	ERP / EIRP	
					dBm	mW
LTE4	5	QPSK	1/0	1712.5	24.59	287.44
			1/0	1732.5	24.27	267.37
			1/0	1752.5	25.47	352.21
		16QAM	1/0	1712.5	23.49	223.12
			1/0	1732.5	23.27	212.38
			1/0	1752.5	24.24	265.34
	3	QPSK	1/0	1711.5	24.74	297.54
			1/0	1732.5	25.17	328.93
			1/0	1753.5	25.38	344.98
		16QAM	1/0	1711.5	23.09	203.49
			1/0	1732.5	23.47	222.38
			1/0	1753.5	24.34	271.52
	1.4	QPSK	1/0	1710.7	24.67	292.78
			1/0	1732.5	24.39	274.86
			1/0	1754.3	25.34	341.82
		16QAM	1/0	1710.7	22.89	194.33
			1/0	1732.5	23.00	199.57
			1/0	1754.3	24.20	262.91

UL VERIFICATION SERVICES INC. FORM NO: CCSUP4701I
47173 BENICIA STREET, FREMONT, CA 94538, USA TEL: (510) 771-1000 FAX: (510) 661-0888
This report shall not be reproduced except in full, without the written approval of UL Verification Services Inc.

LTE Band 2

Band	BW (MHz)	Mode	RB/RB Size	f (MHz)	ERP / EIRP	
					dBm	mW
LTE2	20	QPSK	1/0	1860	27.24	529.05
			1/0	1880	26.72	469.89
			1/0	1900	26.94	493.86
		16QAM	1/0	1860	26.44	440.05
			1/0	1880	26.01	398.57
			1/0	1900	26.24	420.34
	15	QPSK	1/0	1857.5	27.39	547.65
			1/0	1880	27.06	508.16
			1/0	1902.5	26.84	482.61
		16QAM	1/0	1857.5	25.94	392.19
			1/0	1880	25.81	380.63
			1/0	1902.5	25.94	392.28
	10	QPSK	1/0	1855	27.04	505.24
			1/0	1880	27.02	503.5
			1/0	1905	27.17	520.71
		16QAM	1/0	1855	26.22	418.31
			1/0	1880	26.12	409.26
			1/0	1905	26.37	433.11

UL VERIFICATION SERVICES INC. FORM NO: CCSUP4701I
47173 BENICIA STREET, FREMONT, CA 94538, USA TEL: (510) 771-1000 FAX: (510) 661-0888
This report shall not be reproduced except in full, without the written approval of UL Verification Services Inc.

Band	BW (MHz)	Mode	RB/RB Size	f (MHz)	ERP / EIRP	
					dBm	mW
LTE2	5	QPSK	1/0	1852.5	26.45	441.06
			1/0	1880	26.68	465.59
			1/0	1907.5	26.69	466.23
		16QAM	1/0	1852.5	25.68	369.4
			1/0	1880	25.42	348.34
			1/0	1907.5	25.29	337.75
	3	QPSK	1/0	1851.5	27.34	541.38
			1/0	1880	26.77	475.34
			1/0	1908.5	26.99	499.57
		16QAM	1/0	1851.5	26.24	420.24
			1/0	1880	25.92	390.84
			1/0	1908.5	26.19	415.53
	1.4	QPSK	1/0	1850.7	26.94	493.74
			1/0	1880	26.82	480.84
			1/0	1909.3	26.99	499.57
		16QAM	1/0	1850.7	26.08	405.04
			1/0	1880	25.92	390.84
			1/0	1909.3	26.39	435.11

This report shall not be reproduced except in full, without the written approval of UL Verification Services Inc.

9.1.3. ERP/EIRP PLOTS

LTE Band 12

Band

LTE12

10MHz

16QAM

High Frequency Substitution Measurement
UL Verification Services, Inc.

Company: LG
Project #: 15I20243
Date: 3/20/2015
Test Engineer: R.Z
Configuration: EUT Only
Location: Chamber G
Mode: LTE_16QAM Band 12 Fundamentals, 10MHz Bandwidth

Test Equpment:
Receiving: Hybrid T899, and Chamber G SMA Cables
Substitution: Dipole T273, 6ft SMA Cable

f MHz	SG reading (dBm)	Ant. Pol. (H/V)	Cable Loss (dB)	Antenna Gain (dBd)	ERP (dBm)	Limit (dBm)	Delta (dB)	Notes
Low Ch								
704.00	10.60	V	0.9	0.0	9.70	38.5	-28.8	
704.00	20.70	H	0.9	0.0	19.80	38.5	-18.7	
Mid Ch								
707.50	10.10	V	0.9	0.0	9.20	38.5	-29.3	
707.50	20.50	H	0.9	0.0	19.60	38.5	-18.9	
High Ch								
711.00	10.90	V	0.9	0.0	10.00	38.5	-28.5	
711.00	20.90	H	0.9	0.0	20.00	38.5	-18.5	

This report shall not be reproduced except in full, without the written approval of UL Verification Services Inc.

Band

LTE12

10MHz

QPSK

High Frequency Substitution Measurement
UL Verification Services, Inc.

Company: LG
Project #: 15I20243
Date: 3/20/2015
Test Engineer: R.Z
Configuration: EUT Only
Location: Chamber G
Mode: LTE_QPSK Band 12 Fundamentals, 10MHz Bandwidth

Test Equpment:
Receiving: Hybrid T899, and Chamber G SMA Cables
Substitution: Dipole T273, 6ft SMA Cable

f MHz	SG reading (dBm)	Ant. Pol. (H/V)	Cable Loss (dB)	Antenna Gain (dBd)	ERP (dBm)	Limit (dBm)	Delta (dB)	Notes
Low Ch								
704.00	11.98	V	0.9	0.0	11.08	38.5	-27.4	
704.00	22.00	H	0.9	0.0	21.10	38.5	-17.4	
Mid Ch								
707.50	11.58	V	0.9	0.0	10.68	38.5	-27.8	
707.50	21.70	H	0.9	0.0	20.80	38.5	-17.7	
High Ch								
711.00	12.30	V	0.9	0.0	11.40	38.5	-27.1	
711.00	22.30	H	0.9	0.0	21.40	38.5	-17.1	

UL VERIFICATION SERVICES INC. FORM NO: CCSUP4701I
47173 BENICIA STREET, FREMONT, CA 94538, USA TEL: (510) 771-1000 FAX: (510) 661-0888
This report shall not be reproduced except in full, without the written approval of UL Verification Services Inc.

Band

LTE12

5MHz

16QAM

High Frequency Substitution Measurement
UL Verification Services, Inc.

Company: LG
Project #: 15I20243
Date: 3/20/2015
Test Engineer: R.Z
Configuration: EUT Only
Location: Chamber G
Mode: LTE_16QAM Band 12 Fundamentals, 5MHz Bandwidth

Test Equpment:
Receiving: Hybrid T899, and Chamber G SMA Cables
Substitution: Dipole T273, 6ft SMA Cable

f MHz	SG reading (dBm)	Ant. Pol. (H/V)	Cable Loss (dB)	Antenna Gain (dBd)	ERP (dBm)	Limit (dBm)	Delta (dB)	Notes
Low Ch								
701.50	10.50	V	0.9	0.0	9.60	38.5	-28.9	
701.50	20.30	H	0.9	0.0	19.40	38.5	-19.1	
Mid Ch								
707.50	10.40	V	0.9	0.0	9.50	38.5	-29.0	
707.50	20.26	H	0.9	0.0	19.36	38.5	-19.1	
High Ch								
713.50	10.60	V	0.9	0.0	9.70	38.5	-28.8	
713.50	20.40	H	0.9	0.0	19.50	38.5	-19.0	

This report shall not be reproduced except in full, without the written approval of UL Verification Services Inc.

Band

LTE12

5MHz

QPSK

High Frequency Substitution Measurement
UL Verification Services, Inc.

Company: LG
Project #: 15I20243
Date: 3/20/2015
Test Engineer: R.Z
Configuration: EUT Only
Location: Chamber G
Mode: LTE_QPSK Band 12 Fundamentals, 5MHz Bandwidth

Test Equpment:
Receiving: Hybrid T899, and Chamber G SMA Cables
Substitution: Dipole T273, 6ft SMA Cable

f MHz	SG reading (dBm)	Ant. Pol. (H/V)	Cable Loss (dB)	Antenna Gain (dBd)	ERP (dBm)	Limit (dBm)	Delta (dB)	Notes
Low Ch								
701.50	11.83	V	0.9	0.0	10.93	38.5	-27.6	
701.50	21.70	H	0.9	0.0	20.80	38.5	-17.7	
Mid Ch								
707.50	11.70	V	0.9	0.0	10.80	38.5	-27.7	
707.50	21.57	H	0.9	0.0	20.67	38.5	-17.8	
High Ch								
713.50	11.90	V	0.9	0.0	11.00	38.5	-27.5	
713.50	21.80	H	0.9	0.0	20.90	38.5	-17.6	

UL VERIFICATION SERVICES INC. FORM NO: CCSUP4701I
47173 BENICIA STREET, FREMONT, CA 94538, USA TEL: (510) 771-1000 FAX: (510) 661-0888
This report shall not be reproduced except in full, without the written approval of UL Verification Services Inc.

Band

LTE12

3MHz

16QAM

High Frequency Substitution Measurement
UL Verification Services, Inc.

Company: LG
Project #: 15I20243
Date: 3/20/2015
Test Engineer: R.Z
Configuration: EUT Only
Location: Chamber G
Mode: LTE_16QAM Band 12 Fundamentals, 3MHz Bandwidth

Test Equipment:
Receiving: Hybrid T899, and Chamber G SMA Cables
Substitution: Dipole T273, 6ft SMA Cable

f MHz	SG reading (dBm)	Ant. Pol. (H/V)	Cable Loss (dB)	Antenna Gain (dBd)	ERP (dBm)	Limit (dBm)	Delta (dB)	Notes
Low Ch								
700.50	10.37	V	0.9	0.0	9.47	38.5	-29.0	
700.50	20.60	H	0.9	0.0	19.70	38.5	-18.8	
Mid Ch								
707.50	10.32	V	0.9	0.0	9.42	38.5	-29.1	
707.50	21.10	H	0.9	0.0	20.20	38.5	-18.3	
High Ch								
714.50	10.20	V	0.9	0.0	9.30	38.5	-29.2	
714.50	20.60	H	0.9	0.0	19.70	38.5	-18.8	

This report shall not be reproduced except in full, without the written approval of UL Verification Services Inc.

Band

LTE12

3MHz

QPSK

High Frequency Substitution Measurement
UL Verification Services, Inc.

Company: LG
Project #: 15I20243
Date: 3/20/2015
Test Engineer: R.Z
Configuration: EUT Only
Location: Chamber G
Mode: LTE_QPSK Band 12 Fundamentals, 3MHz Bandwidth

Test Equipment:
Receiving: Hybrid T899, and Chamber G SMA Cables
Substitution: Dipole T273, 6ft SMA Cable

f MHz	SG reading (dBm)	Ant. Pol. (H/V)	Cable Loss (dB)	Antenna Gain (dBd)	ERP (dBm)	Limit (dBm)	Delta (dB)	Notes
Low Ch								
700.50	11.30	V	0.9	0.0	10.40	38.5	-28.1	
700.50	21.70	H	0.9	0.0	20.80	38.5	-17.7	
Mid Ch								
707.50	11.60	V	0.9	0.0	10.70	38.5	-27.8	
707.50	22.20	H	0.9	0.0	21.30	38.5	-17.2	
High Ch								
714.50	11.40	V	0.9	0.0	10.50	38.5	-28.0	
714.50	21.80	H	0.9	0.0	20.90	38.5	-17.6	

UL VERIFICATION SERVICES INC. FORM NO: CCSUP4701I
47173 BENICIA STREET, FREMONT, CA 94538, USA TEL: (510) 771-1000 FAX: (510) 661-0888
This report shall not be reproduced except in full, without the written approval of UL Verification Services Inc.

Band

LTE12

1.4MHz

16QAM

High Frequency Substitution Measurement
UL Verification Services, Inc.

Company: LG
Project #: 15I20243
Date: 3/20/2015
Test Engineer: R.Z
Configuration: EUT Only
Location: Chamber G
Mode: LTE_16QAM Band 12 Fundamentals, 1.4MHz Bandwidth

Test Equipment:
Receiving: Hybrid T899, and Chamber G SMA Cables
Substitution: Dipole T273, 6ft SMA Cable

f MHz	SG reading (dBm)	Ant. Pol. (H/V)	Cable Loss (dB)	Antenna Gain (dBd)	ERP (dBm)	Limit (dBm)	Delta (dB)	Notes
Low Ch								
699.70	10.20	V	0.9	0.0	9.30	38.5	-29.2	
699.70	20.80	H	0.9	0.0	19.90	38.5	-18.6	
Mid Ch								
707.50	9.50	V	0.9	0.0	8.60	38.5	-29.9	
707.50	20.90	H	0.9	0.0	20.00	38.5	-18.5	
High Ch								
715.30	10.10	V	0.9	0.0	9.20	38.5	-29.3	
715.30	20.80	H	0.9	0.0	19.90	38.5	-18.6	

This report shall not be reproduced except in full, without the written approval of UL Verification Services Inc.

Band

LTE12

1.4MHz

QPSK

High Frequency Substitution Measurement
UL Verification Services, Inc.

Company: LG
Project #: 15I20243
Date: 3/20/2015
Test Engineer: R.Z
Configuration: EUT Only
Location: Chamber G
Mode: LTE_QPSK Band 12 Fundamentals, 1.4MHz Bandwidth

Test Equpment:
Receiving: Hybrid T899, and Chamber G SMA Cables
Substitution: Dipole T273, 6ft SMA Cable

f MHz	SG reading (dBm)	Ant. Pol. (H/V)	Cable Loss (dB)	Antenna Gain (dBd)	ERP (dBm)	Limit (dBm)	Delta (dB)	Notes
Low Ch								
699.70	11.26	V	0.9	0.0	10.36	38.5	-28.1	
699.70	21.70	H	0.9	0.0	20.80	38.5	-17.7	
Mid Ch								
707.50	11.00	V	0.9	0.0	10.10	38.5	-28.4	
707.50	21.90	H	0.9	0.0	21.00	38.5	-17.5	
High Ch								
715.30	11.00	V	0.9	0.0	10.10	38.5	-28.4	
715.30	21.70	H	0.9	0.0	20.80	38.5	-17.7	

This report shall not be reproduced except in full, without the written approval of UL Verification Services Inc.

Band

LTE4

20MHz

16QAM

High Frequency Substitution Measurement
UL Verification Services, Inc.

Company: LG Electronics
Project #: 15I20243
Date: 3/19/2015
Test Engineer: R.Z
Configuration: EUT only
Location: Chamber G
Mode: LTE_16QAM Band 4 Fundamentals, 20MHz Bandwidth

Test Equpment:
Receiving: Horn T862, and Chamber G SMA Cables
Substitution: Horn T59, 6ft SMA Cable

f MHz	SG reading (dBm)	Ant. Pol. (H/V)	Cable Loss (dB)	Antenna Gain (dBi)	EIRP (dBm)	Limit (dBm)	Delta (dB)	Notes
Low Ch								
1720.00	13.06	V	0.9	8.3	20.42	30.0	-9.6	
1720.00	16.43	H	0.9	8.3	23.79	30.0	-6.2	
Mid Ch								
1732.50	13.70	V	0.9	8.2	20.97	30.0	-9.0	
1732.50	16.26	H	0.9	8.2	23.53	30.0	-6.5	
High Ch								
1745.00	14.36	V	0.9	8.2	21.66	30.0	-8.3	
1745.00	17.64	H	0.9	8.2	24.94	30.0	-5.1	

UL VERIFICATION SERVICES INC. FORM NO: CCSUP4701I
47173 BENICIA STREET, FREMONT, CA 94538, USA TEL: (510) 771-1000 FAX: (510) 661-0888
This report shall not be reproduced except in full, without the written approval of UL Verification Services Inc.

Band

LTE4

20MHz

QPSK

High Frequency Substitution Measurement
UL Verification Services, Inc.

Company: LG Electronics
Project #: 15I20243
Date: 3/19/2015
Test Engineer: R.Z
Configuration: EUT only
Location: Chamber G
Mode: LTE_QPSK Band 4 Fundamentals, 20MHz Bandwidth

Test Equpment:
Receiving: Horn T862, and Chamber G SMA Cables
Substitution: Horn T59, 6ft SMA Cable

f MHz	SG reading (dBm)	Ant. Pol. (H/V)	Cable Loss (dB)	Antenna Gain (dBi)	EIRP (dBm)	Limit (dBm)	Delta (dB)	Notes
Low Ch								
1720.00	14.26	V	0.9	8.3	21.62	30.0	-8.4	
1720.00	17.93	H	0.9	8.3	25.29	30.0	-4.7	
Mid Ch								
1732.50	14.34	V	0.9	8.2	21.61	30.0	-8.4	
1732.50	17.78	H	0.9	8.2	25.05	30.0	-5.0	
High Ch								
1745.00	15.16	V	0.9	8.2	22.46	30.0	-7.5	
1745.00	18.94	H	0.9	8.2	26.24	30.0	-3.8	

This report shall not be reproduced except in full, without the written approval of UL Verification Services Inc.

Band

LTE4

15MHz

16QAM

High Frequency Substitution Measurement
UL Verification Services, Inc.

Company: LG Electronics
Project #: 15I20243
Date: 3/19/2015
Test Engineer: R.Z
Configuration: EUT only
Location: Chamber G
Mode: LTE_16QAM Band 4 Fundamentals, 15MHz Bandwidth

Test Equpment:
Receiving: Horn T862, and Chamber G SMA Cables
Substitution: Horn T59, 6ft SMA Cable

f MHz	SG reading (dBm)	Ant. Pol. (H/V)	Cable Loss (dB)	Antenna Gain (dBi)	EIRP (dBm)	Limit (dBm)	Delta (dB)	Notes
Low Ch								
1717.50	14.06	V	0.9	8.3	21.42	30.0	-8.6	
1717.50	15.63	H	0.9	8.3	22.99	30.0	-7.0	
Mid Ch								
1732.50	14.50	V	0.9	8.2	21.77	30.0	-8.2	
1732.50	16.30	H	0.9	8.2	23.57	30.0	-6.4	
High Ch								
1747.50	14.76	V	0.9	8.2	22.06	30.0	-7.9	
1747.50	16.84	H	0.9	8.2	24.14	30.0	-5.9	

UL VERIFICATION SERVICES INC. FORM NO: CCSUP4701I
47173 BENICIA STREET, FREMONT, CA 94538, USA TEL: (510) 771-1000 FAX: (510) 661-0888
This report shall not be reproduced except in full, without the written approval of UL Verification Services Inc.

Band

LTE4

15MHz

QPSK

High Frequency Substitution Measurement
UL Verification Services, Inc.

Company: LG Electronics
Project #: 15I20243
Date: 3/19/2015
Test Engineer: R.Z
Configuration: EUT only
Location: Chamber G
Mode: LTE_QPSK Band 4 Fundamentals, 15MHz Bandwidth

Test Equpment:
Receiving: Horn T862, and Chamber G SMA Cables
Substitution: Horn T59, 6ft SMA Cable

f MHz	SG reading (dBm)	Ant. Pol. (H/V)	Cable Loss (dB)	Antenna Gain (dBi)	EIRP (dBm)	Limit (dBm)	Delta (dB)	Notes
Low Ch								
1717.50	14.76	V	0.9	8.3	22.12	30.0	-7.9	
1717.50	17.53	H	0.9	8.3	24.89	30.0	-5.1	
Mid Ch								
1732.50	15.70	V	0.9	8.2	22.97	30.0	-7.0	
1732.50	18.00	H	0.9	8.2	25.27	30.0	-4.7	
High Ch								
1747.50	16.06	V	0.9	8.2	23.36	30.0	-6.6	
1747.50	18.80	H	0.9	8.2	26.10	30.0	-3.9	

This report shall not be reproduced except in full, without the written approval of UL Verification Services Inc.

Band

LTE4

10MHz

16QAM

High Frequency Substitution Measurement
UL Verification Services, Inc.

Company: LG Electronics
Project #: 15I20243
Date: 3/19/2015
Test Engineer: R.Z
Configuration: EUT only
Location: Chamber G
Mode: LTE_16QAM Band 4 Fundamentals, 10MHz Bandwidth

Test Equpment:
Receiving: Horn T862, and Chamber G SMA Cables
Substitution: Horn T59, 6ft SMA Cable

f MHz	SG reading (dBm)	Ant. Pol. (H/V)	Cable Loss (dB)	Antenna Gain (dBi)	EIRP (dBm)	Limit (dBm)	Delta (dB)	Notes
Low Ch								
1715.00	13.06	V	0.9	8.3	20.42	30.0	-9.6	
1715.00	15.33	H	0.9	8.3	22.69	30.0	-7.3	
Mid Ch								
1732.50	12.60	V	0.9	8.2	19.87	30.0	-10.1	
1732.50	15.20	H	0.9	8.2	22.47	30.0	-7.5	
High Ch								
1750.00	13.96	V	0.9	8.2	21.26	30.0	-8.7	
1750.00	17.94	H	0.9	8.2	25.24	30.0	-4.8	

UL VERIFICATION SERVICES INC. FORM NO: CCSUP4701I
47173 BENICIA STREET, FREMONT, CA 94538, USA TEL: (510) 771-1000 FAX: (510) 661-0888
This report shall not be reproduced except in full, without the written approval of UL Verification Services Inc.

Band

LTE4

10MHz

QPSK

High Frequency Substitution Measurement
UL Verification Services, Inc.

Company: LG Electronics
Project #: 15I20243
Date: 3/19/2015
Test Engineer: R.Z
Configuration: EUT only
Location: Chamber G
Mode: LTE_QPSK Band 4 Fundamentals, 10MHz Bandwidth

Test Equpment:
Receiving: Horn T862, and Chamber G SMA Cables
Substitution: Horn T59, 6ft SMA Cable

f MHz	SG reading (dBm)	Ant. Pol. (H/V)	Cable Loss (dB)	Antenna Gain (dBi)	EIRP (dBm)	Limit (dBm)	Delta (dB)	Notes
Low Ch								
1715.00	13.96	V	0.9	8.3	21.32	30.0	-8.7	
1715.00	17.33	H	0.9	8.3	24.69	30.0	-5.3	
Mid Ch								
1732.50	13.70	V	0.9	8.2	20.97	30.0	-9.0	
1732.50	16.76	H	0.9	8.2	24.03	30.0	-6.0	
High Ch								
1750.00	14.56	V	0.9	8.2	21.86	30.0	-8.1	
1750.00	19.04	H	0.9	8.2	26.34	30.0	-3.7	

UL VERIFICATION SERVICES INC. FORM NO: CCSUP4701I
47173 BENICIA STREET, FREMONT, CA 94538, USA TEL: (510) 771-1000 FAX: (510) 661-0888
This report shall not be reproduced except in full, without the written approval of UL Verification Services Inc.

Band

LTE4

5MHz

16QAM

High Frequency Substitution Measurement
UL Verification Services, Inc.

Company: LG Electronics
Project #: 15I20243
Date: 3/19/2015
Test Engineer: R.Z
Configuration: EUT only
Location: Chamber G
Mode: LTE_16QAM Band 4 Fundamentals, 5MHz Bandwidth

Test Equpment:
Receiving: Horn T862, and Chamber G SMA Cables
Substitution: Horn T59, 6ft SMA Cable

f MHz	SG reading (dBm)	Ant. Pol. (H/V)	Cable Loss (dB)	Antenna Gain (dBi)	EIRP (dBm)	Limit (dBm)	Delta (dB)	Notes
Low Ch								
1712.50	11.39	V	0.9	8.3	18.75	30.0	-11.3	
1712.50	16.13	H	0.9	8.3	23.49	30.0	-6.5	
Mid Ch								
1732.50	13.80	V	0.9	8.2	21.07	30.0	-8.9	
1732.50	16.00	H	0.9	8.2	23.27	30.0	-6.7	
High Ch								
1752.50	14.86	V	0.9	8.2	22.16	30.0	-7.8	
1752.50	16.94	H	0.9	8.2	24.24	30.0	-5.8	

This report shall not be reproduced except in full, without the written approval of UL Verification Services Inc.

Band

LTE4

5MHz

QPSK

High Frequency Substitution Measurement
UL Verification Services, Inc.

Company: LG Electronics
Project #: 15I20243
Date: 3/19/2015
Test Engineer: R.Z
Configuration: EUT only
Location: Chamber G
Mode: LTE_QPSK Band 4 Fundamentals, 5MHz Bandwidth

Test Equpment:
Receiving: Horn T862, and Chamber G SMA Cables
Substitution: Horn T59, 6ft SMA Cable

f MHz	SG reading (dBm)	Ant. Pol. (H/V)	Cable Loss (dB)	Antenna Gain (dBi)	EIRP (dBm)	Limit (dBm)	Delta (dB)	Notes
Low Ch								
1712.50	11.93	V	0.9	8.3	19.29	30.0	-10.7	
1712.50	17.23	H	0.9	8.3	24.59	30.0	-5.4	
Mid Ch								
1732.50	14.70	V	0.9	8.2	21.97	30.0	-8.0	
1732.50	17.00	H	0.9	8.2	24.27	30.0	-5.7	
High Ch								
1752.50	15.96	V	0.9	8.2	23.26	30.0	-6.7	
1752.50	18.17	H	0.9	8.2	25.47	30.0	-4.5	

This report shall not be reproduced except in full, without the written approval of UL Verification Services Inc.

Band

LTE4

3MHz

16QAM

High Frequency Substitution Measurement
UL Verification Services, Inc.

Company: LG Electronics
Project #: 15I20243
Date: 3/19/2015
Test Engineer: R.Z
Configuration: EUT only
Location: Chamber G
Mode: LTE_16QAM Band 4 Fundamentals, 3MHz Bandwidth

Test Equpment:
Receiving: Horn T862, and Chamber G SMA Cables
Substitution: Horn T59, 6ft SMA Cable

f MHz	SG reading (dBm)	Ant. Pol. (H/V)	Cable Loss (dB)	Antenna Gain (dBi)	EIRP (dBm)	Limit (dBm)	Delta (dB)	Notes
Low Ch								
1711.50	13.66	V	0.9	8.3	21.02	30.0	-9.0	
1711.50	15.73	H	0.9	8.3	23.09	30.0	-6.9	
Mid Ch								
1732.50	13.50	V	0.9	8.2	20.77	30.0	-9.2	
1732.50	16.20	H	0.9	8.2	23.47	30.0	-6.5	
High Ch								
1753.50	13.66	V	0.9	8.2	20.96	30.0	-9.0	
1753.50	17.04	H	0.9	8.2	24.34	30.0	-5.7	

UL VERIFICATION SERVICES INC. FORM NO: CCSUP4701I
47173 BENICIA STREET, FREMONT, CA 94538, USA TEL: (510) 771-1000 FAX: (510) 661-0888
This report shall not be reproduced except in full, without the written approval of UL Verification Services Inc.

Band

LTE4

3MHz

QPSK

High Frequency Substitution Measurement
UL Verification Services, Inc.

Company: LG Electronics
Project #: 15I20243
Date: 3/19/2015
Test Engineer: R.Z
Configuration: EUT only
Location: Chamber G
Mode: LTE_QPSK Band 4 Fundamentals, 3MHz Bandwidth

Test Equpment:
Receiving: Horn T862, and Chamber G SMA Cables
Substitution: Horn T59, 6ft SMA Cable

f MHz	SG reading (dBm)	Ant. Pol. (H/V)	Cable Loss (dB)	Antenna Gain (dBi)	EIRP (dBm)	Limit (dBm)	Delta (dB)	Notes
Low Ch								
1711.50	14.76	V	0.9	8.3	22.12	30.0	-7.9	
1711.50	17.38	H	0.9	8.3	24.74	30.0	-5.3	
Mid Ch								
1732.50	14.10	V	0.9	8.2	21.37	30.0	-8.6	
1732.50	17.90	H	0.9	8.2	25.17	30.0	-4.8	
High Ch								
1753.50	14.46	V	0.9	8.2	21.76	30.0	-8.2	
1753.50	18.08	H	0.9	8.2	25.38	30.0	-4.6	

This report shall not be reproduced except in full, without the written approval of UL Verification Services Inc.

Band

LTE4

1.4MHz

16QAM

High Frequency Substitution Measurement
UL Verification Services, Inc.

Company: LG Electronics
Project #: 15I20243
Date: 3/19/2015
Test Engineer: R.Z
Configuration: EUT only
Location: Chamber G
Mode: LTE_16QAM Band 4 Fundamentals, 1.4MHz Bandwidth

Test Equpment:
Receiving: Horn T862, and Chamber G SMA Cables
Substitution: Horn T59, 6ft SMA Cable

f MHz	SG reading (dBm)	Ant. Pol. (H/V)	Cable Loss (dB)	Antenna Gain (dBi)	EIRP (dBm)	Limit (dBm)	Delta (dB)	Notes
Low Ch								
1710.70	14.63	V	0.9	8.3	21.99	30.0	-8.0	-22.1
1710.70	15.53	H	0.9	8.3	22.89	30.0	-7.1	-21.4
Mid Ch								
1732.50	15.09	V	0.9	8.2	22.36	30.0	-7.6	-22.2
1732.50	15.73	H	0.9	8.2	23.00	30.0	-7.0	-21.3
High Ch								
1754.30	15.56	V	0.9	8.2	22.86	30.0	-7.1	-22.4
1754.30	16.90	H	0.9	8.2	24.20	30.0	-5.8	-21.1

UL VERIFICATION SERVICES INC. FORM NO: CCSUP4701I
47173 BENICIA STREET, FREMONT, CA 94538, USA TEL: (510) 771-1000 FAX: (510) 661-0888
This report shall not be reproduced except in full, without the written approval of UL Verification Services Inc.

Band

LTE4

1.4MHz

QPSK

High Frequency Substitution Measurement
UL Verification Services, Inc.

Company: LG Electronics
Project #: 15I20243
Date: 3/19/2015
Test Engineer: R.Z
Configuration: EUT only
Location: Chamber G
Mode: LTE_QPSK Band 4 Fundamentals, 1.4MHz Bandwidth

Test Equpment:
Receiving: Horn T862, and Chamber G SMA Cables
Substitution: Horn T59, 6ft SMA Cable

f MHz	SG reading (dBm)	Ant. Pol. (H/V)	Cable Loss (dB)	Antenna Gain (dBi)	EIRP (dBm)	Limit (dBm)	Delta (dB)	Notes
Low Ch								
1710.70	15.26	V	0.9	8.3	22.62	30.0	-7.4	
1710.70	17.31	H	0.9	8.3	24.67	30.0	-5.3	
Mid Ch								
1732.50	15.62	V	0.9	8.2	22.89	30.0	-7.1	
1732.50	17.12	H	0.9	8.2	24.39	30.0	-5.6	
High Ch								
1754.30	16.23	V	0.9	8.2	23.53	30.0	-6.5	
1754.30	18.04	H	0.9	8.2	25.34	30.0	-4.7	

This report shall not be reproduced except in full, without the written approval of UL Verification Services Inc.

LTE Band 2

Band

LTE2

20MHz

16QAM

High Frequency Substitution Measurement
UL Verification Services, Inc.

Company: LG Electronics
Project #: 15I20243
Date: 3/19/2015
Test Engineer: R.Z
Configuration: EUT only
Location: Chamber G
Mode: LTE_16QAM Band 2 Fundamentals, 20MHz Bandwidth

Test Equpment:
Receiving: Horn T862 and Chamber G SMA Cables
Substitution: Horn T59, 6ft SMA Cable

f MHz	SG reading (dBm)	Ant. Pol. (H/V)	Cable Loss (dB)	Antenna Gain (dBi)	EIRP (dBm)	Limit (dBm)	Delta (dB)	Notes
Low Ch								
1860.00	18.10	V	0.9	9.2	26.44	33.0	-6.6	
1860.00	17.54	H	0.9	9.2	25.88	33.0	-7.1	
Mid Ch								
1880.00	17.76	V	0.9	9.2	26.01	33.0	-7.0	
1880.00	17.67	H	0.9	9.2	25.92	33.0	-7.1	
High Ch								
1900.00	18.07	V	0.9	9.1	26.24	33.0	-6.8	
1900.00	17.72	H	0.9	9.1	25.89	33.0	-7.1	

UL VERIFICATION SERVICES INC. FORM NO: CCSUP4701I
47173 BENICIA STREET, FREMONT, CA 94538, USA TEL: (510) 771-1000 FAX: (510) 661-0888
This report shall not be reproduced except in full, without the written approval of UL Verification Services Inc.

Band

LTE2

20MHz

QPSK

High Frequency Substitution Measurement
UL Verification Services, Inc.

Company: LG Electronics
Project #: 15I20243
Date: 3/19/2015
Test Engineer: R.Z
Configuration: EUT only
Location: Chamber G
Mode: LTE_QPSK Band 2 Fundamentals, 20MHz Bandwidth

Test Equpment:
Receiving: Horn T862 and Chamber G SMA Cables
Substitution: Horn T59, 6ft SMA Cable

f MHz	SG reading (dBm)	Ant. Pol. (H/V)	Cable Loss (dB)	Antenna Gain (dBi)	EIRP (dBm)	Limit (dBm)	Delta (dB)	Notes
Low Ch								
1860.00	18.90	V	0.9	9.2	27.24	33.0	-5.8	
1860.00	18.54	H	0.9	9.2	26.88	33.0	-6.1	
Mid Ch								
1880.00	18.46	V	0.9	9.2	26.71	33.0	-6.3	
1880.00	18.47	H	0.9	9.2	26.72	33.0	-6.3	
High Ch								
1900.00	18.77	V	0.9	9.1	26.94	33.0	-6.1	
1900.00	18.42	H	0.9	9.1	26.59	33.0	-6.4	

UL VERIFICATION SERVICES INC. FORM NO: CCSUP4701I
47173 BENICIA STREET, FREMONT, CA 94538, USA TEL: (510) 771-1000 FAX: (510) 661-0888
This report shall not be reproduced except in full, without the written approval of UL Verification Services Inc.

Band

LTE2

15MHz

16QAM

High Frequency Substitution Measurement
UL Verification Services, Inc.

Company: LG Electronics
Project #: 15I20243
Date: 3/19/2015
Test Engineer: R.Z
Configuration: EUT only
Location: Chamber G
Mode: LTE_16QAM Band 2 Fundamentals, 15MHz Bandwidth

Test Equpment:
Receiving: Horn T862 and Chamber G SMA Cables
Substitution: Horn T59, 6ft SMA Cable

f MHz	SG reading (dBm)	Ant. Pol. (H/V)	Cable Loss (dB)	Antenna Gain (dBi)	EIRP (dBm)	Limit (dBm)	Delta (dB)	Notes
Low Ch								
1857.50	17.60	V	0.9	9.2	25.94	33.0	-7.1	
1857.50	17.23	H	0.9	9.2	25.57	33.0	-7.4	
Mid Ch								
1880.00	17.56	V	0.9	9.2	25.81	33.0	-7.2	
1880.00	17.27	H	0.9	9.2	25.52	33.0	-7.5	
High Ch								
1902.50	17.77	V	0.9	9.1	25.94	33.0	-7.1	
1902.50	17.62	H	0.9	9.1	25.79	33.0	-7.2	

UL VERIFICATION SERVICES INC. FORM NO: CCSUP4701I
47173 BENICIA STREET, FREMONT, CA 94538, USA TEL: (510) 771-1000 FAX: (510) 661-0888
This report shall not be reproduced except in full, without the written approval of UL Verification Services Inc.

Band

LTE2

15MHz

QPSK

High Frequency Substitution Measurement
UL Verification Services, Inc.

Company: LG Electronics
Project #: 15I20243
Date: 3/19/2015
Test Engineer: R.Z
Configuration: EUT only
Location: Chamber G
Mode: LTE_QPSK Band 2 Fundamentals, 15MHz Bandwidth

Test Equpment:
Receiving: Horn T862 and Chamber G SMA Cables
Substitution: Horn T59, 6ft SMA Cable

f MHz	SG reading (dBm)	Ant. Pol. (H/V)	Cable Loss (dB)	Antenna Gain (dBi)	EIRP (dBm)	Limit (dBm)	Delta (dB)	Notes
Low Ch								
1857.50	19.05	V	0.9	9.2	27.39	33.0	-5.6	
1857.50	18.64	H	0.9	9.2	26.98	33.0	-6.0	
Mid Ch								
1880.00	18.16	V	0.9	9.2	26.41	33.0	-6.6	
1880.00	18.81	H	0.9	9.2	27.06	33.0	-5.9	
High Ch								
1902.50	18.67	V	0.9	9.1	26.84	33.0	-6.2	
1902.50	18.35	H	0.9	9.1	26.52	33.0	-6.5	

This report shall not be reproduced except in full, without the written approval of UL Verification Services Inc.

Band

LTE2

10MHz

16QAM

High Frequency Substitution Measurement
UL Verification Services, Inc.

Company: LG Electronics
Project #: 15I20243
Date: 3/19/2015
Test Engineer: R.Z
Configuration: EUT only
Location: Chamber G
Mode: LTE_16QAM Band 2 Fundamentals, 10MHz Bandwidth

Test Equpment:
Receiving: Horn T862, and Chamber G SMA Cables
Substitution: Horn T59, 6ft SMA Cable Warehouse

f MHz	SG reading (dBm)	Ant. Pol. (H/V)	Cable Loss (dB)	Antenna Gain (dBi)	EIRP (dBm)	Limit (dBm)	Delta (dB)	Notes
Low Ch								
1855.00	17.88	V	0.9	9.2	26.22	33.0	-6.8	
1855.00	17.44	H	0.9	9.2	25.78	33.0	-7.2	
Mid Ch								
1880.00	17.66	V	0.9	9.2	25.91	33.0	-7.1	
1880.00	17.87	H	0.9	9.2	26.12	33.0	-6.9	
High Ch								
1905.00	17.67	V	0.9	9.1	25.84	33.0	-7.2	
1905.00	18.20	H	0.9	9.1	26.37	33.0	-6.6	

UL VERIFICATION SERVICES INC. FORM NO: CCSUP4701I
47173 BENICIA STREET, FREMONT, CA 94538, USA TEL: (510) 771-1000 FAX: (510) 661-0888
This report shall not be reproduced except in full, without the written approval of UL Verification Services Inc.

Band

LTE2

10MHz

QPSK

High Frequency Substitution Measurement
UL Verification Services, Inc.

Company: LG Electronics
Project #: 15I20243
Date: 3/19/2015
Test Engineer: R.Z
Configuration: EUT only
Location: Chamber G
Mode: LTE_QPSK Band 2 Fundamentals, 10MHz Bandwidth

Test Equpment:
Receiving: Horn T862, and Chamber G SMA Cables
Substitution: Horn T59, 6ft SMA Cable Warehouse

f MHz	SG reading (dBm)	Ant. Pol. (H/V)	Cable Loss (dB)	Antenna Gain (dBi)	EIRP (dBm)	Limit (dBm)	Delta (dB)	Notes
Low Ch								
1855.00	18.70	V	0.9	9.2	27.04	33.0	-6.0	
1855.00	18.34	H	0.9	9.2	26.68	33.0	-6.3	
Mid Ch								
1880.00	18.64	V	0.9	9.2	26.89	33.0	-6.1	
1880.00	18.77	H	0.9	9.2	27.02	33.0	-6.0	
High Ch								
1905.00	18.57	V	0.9	9.1	26.74	33.0	-6.3	
1905.00	19.00	H	0.9	9.1	27.17	33.0	-5.8	

This report shall not be reproduced except in full, without the written approval of UL Verification Services Inc.

Band

LTE2

5MHz

16QAM

High Frequency Substitution Measurement
UL Verification Services, Inc.

Company: LG Electronics
Project #: 15I20243
Date: 3/19/2015
Test Engineer: R.Z
Configuration: EUT only
Location: Chamber G
Mode: LTE_16QAM Band 2 Fundamentals, 5MHz Bandwidth

Test Equpment:
Receiving: Horn T862, and Chamber G SMA Cables
Substitution: Horn T59, 6ft SMA Cable Warehouse

f MHz	SG reading (dBm)	Ant. Pol. (H/V)	Cable Loss (dB)	Antenna Gain (dBi)	EIRP (dBm)	Limit (dBm)	Delta (dB)	Notes
Low Ch								
1852.50	16.66	V	0.9	9.2	25.00	33.0	-8.0	
1852.50	17.34	H	0.9	9.2	25.68	33.0	-7.3	
Mid Ch								
1880.00	16.76	V	0.9	9.2	25.01	33.0	-8.0	
1880.00	17.17	H	0.9	9.2	25.42	33.0	-7.6	
High Ch								
1907.50	16.67	V	0.9	9.1	24.84	33.0	-8.2	
1907.50	17.12	H	0.9	9.1	25.29	33.0	-7.7	

UL VERIFICATION SERVICES INC. FORM NO: CCSUP4701I
47173 BENICIA STREET, FREMONT, CA 94538, USA TEL: (510) 771-1000 FAX: (510) 661-0888
This report shall not be reproduced except in full, without the written approval of UL Verification Services Inc.

Band

LTE2

5MHz

QPSK

High Frequency Substitution Measurement
UL Verification Services, Inc.

Company: LG Electronics
Project #: 15I20243
Date: 3/19/2015
Test Engineer: R.Z
Configuration: EUT only
Location: Chamber G
Mode: LTE_QPSK Band 2 Fundamentals, 5MHz Bandwidth

Test Equpment:
Receiving: Horn T862, and Chamber G SMA Cables
Substitution: Horn T59, 6ft SMA Cable Warehouse

f MHz	SG reading (dBm)	Ant. Pol. (H/V)	Cable Loss (dB)	Antenna Gain (dBi)	EIRP (dBm)	Limit (dBm)	Delta (dB)	Notes
Low Ch								
1852.50	17.79	V	0.9	9.2	26.13	33.0	-6.9	
1852.50	18.11	H	0.9	9.2	26.45	33.0	-6.6	
Mid Ch								
1880.00	17.92	V	0.9	9.2	26.17	33.0	-6.8	
1880.00	18.43	H	0.9	9.2	26.68	33.0	-6.3	
High Ch								
1907.50	17.91	V	0.9	9.1	26.08	33.0	-6.9	
1907.50	18.52	H	0.9	9.1	26.69	33.0	-6.3	

UL VERIFICATION SERVICES INC. FORM NO: CCSUP4701I
47173 BENICIA STREET, FREMONT, CA 94538, USA TEL: (510) 771-1000 FAX: (510) 661-0888
This report shall not be reproduced except in full, without the written approval of UL Verification Services Inc.

Band

LTE2

3MHz

16QAM

High Frequency Substitution Measurement
UL Verification Services, Inc.

Company: LG Electronics
Project #: 15I20243
Date: 3/19/2015
Test Engineer: R.Z
Configuration: EUT only
Location: Chamber G
Mode: LTE_16QAM Band 2 Fundamentals, 3MHz Bandwidth

Test Equpment:
Receiving: Horn T862, and Chamber G SMA Cables
Substitution: Horn T59, 6ft SMA Cable Warehouse

f MHz	SG reading (dBm)	Ant. Pol. (H/V)	Cable Loss (dB)	Antenna Gain (dBi)	EIRP (dBm)	Limit (dBm)	Delta (dB)	Notes
Low Ch								
1851.50	17.90	V	0.9	9.2	26.24	33.0	-6.8	
1851.50	17.24	H	0.9	9.2	25.58	33.0	-7.4	
Mid Ch								
1880.00	17.26	V	0.9	9.2	25.51	33.0	-7.5	
1880.00	17.67	H	0.9	9.2	25.92	33.0	-7.1	
High Ch								
1908.50	17.47	V	0.9	9.1	25.64	33.0	-7.4	
1908.50	18.02	H	0.9	9.1	26.19	33.0	-6.8	

UL VERIFICATION SERVICES INC. FORM NO: CCSUP4701I
47173 BENICIA STREET, FREMONT, CA 94538, USA TEL: (510) 771-1000 FAX: (510) 661-0888
This report shall not be reproduced except in full, without the written approval of UL Verification Services Inc.

Band

LTE2

3MHz

QPSK

High Frequency Substitution Measurement
UL Verification Services, Inc.

Company: LG Electronics
Project #: 15I20243
Date: 3/19/2015
Test Engineer: R.Z
Configuration: EUT only
Location: Chamber G
Mode: LTE_QPSK Band 2 Fundamentals, 3MHz Bandwidth

Test Equpment:
Receiving: Horn T862, and Chamber G SMA Cables
Substitution: Horn T59, 6ft SMA Cable Warehouse

f MHz	SG reading (dBm)	Ant. Pol. (H/V)	Cable Loss (dB)	Antenna Gain (dBi)	EIRP (dBm)	Limit (dBm)	Delta (dB)	Notes
Low Ch								
1851.50	19.00	V	0.9	9.2	27.34	33.0	-5.7	
1851.50	18.44	H	0.9	9.2	26.78	33.0	-6.2	
Mid Ch								
1880.00	18.41	V	0.9	9.2	26.66	33.0	-6.3	
1880.00	18.52	H	0.9	9.2	26.77	33.0	-6.2	
High Ch								
1908.50	18.17	V	0.9	9.1	26.34	33.0	-6.7	
1908.50	18.82	H	0.9	9.1	26.99	33.0	-6.0	

UL VERIFICATION SERVICES INC. FORM NO: CCSUP4701I
47173 BENICIA STREET, FREMONT, CA 94538, USA TEL: (510) 771-1000 FAX: (510) 661-0888
This report shall not be reproduced except in full, without the written approval of UL Verification Services Inc.

Band

LTE2

1.4MHz

16QAM

High Frequency Substitution Measurement
UL Verification Services, Inc.

Company: LG Electronics
Project #: 15I20243
Date: 3/19/2015
Test Engineer: R.Z
Configuration: EUT only
Location: Chamber G
Mode: LTE_16QAM Band 2 Fundamentals, 1.4MHz Bandwidth

Test Equpment:
Receiving: Horn T862, and Chamber G SMA Cables
Substitution: Horn T59, 6ft SMA Cable Warehouse

f MHz	SG reading (dBm)	Ant. Pol. (H/V)	Cable Loss (dB)	Antenna Gain (dBi)	EIRP (dBm)	Limit (dBm)	Delta (dB)	Notes
Low Ch								
1850.70	17.50	V	0.9	9.2	25.84	33.0	-7.2	
1850.70	17.74	H	0.9	9.2	26.08	33.0	-6.9	
Mid Ch								
1880.00	16.46	V	0.9	9.2	24.71	33.0	-8.3	
1880.00	17.67	H	0.9	9.2	25.92	33.0	-7.1	
High Ch								
1909.30	17.07	V	0.9	9.1	25.24	33.0	-7.8	
1909.30	18.22	H	0.9	9.1	26.39	33.0	-6.6	

This report shall not be reproduced except in full, without the written approval of UL Verification Services Inc.

Band

LTE2

1.4MHz

QPSK

High Frequency Substitution Measurement
UL Verification Services, Inc.

Company: LG Electronics
Project #: 15I20243
Date: 3/19/2015
Test Engineer: R.Z
Configuration: EUT only
Location: Chamber G
Mode: LTE_QPSK Band 2 Fundamentals, 1.4MHz Bandwidth

Test Equpment:
Receiving: Horn T862, and Chamber G SMA Cables
Substitution: Horn T59, 6ft SMA Cable Warehouse

f MHz	SG reading (dBm)	Ant. Pol. (H/V)	Cable Loss (dB)	Antenna Gain (dBi)	EIRP (dBm)	Limit (dBm)	Delta (dB)	Notes
Low Ch								
1850.70	18.60	V	0.9	9.2	26.94	33.0	-6.1	
1850.70	18.54	H	0.9	9.2	26.88	33.0	-6.1	
Mid Ch								
1880.00	17.56	V	0.9	9.2	25.81	33.0	-7.2	
1880.00	18.57	H	0.9	9.2	26.82	33.0	-6.2	
High Ch								
1909.30	18.27	V	0.9	9.1	26.44	33.0	-6.6	
1909.30	18.82	H	0.9	9.1	26.99	33.0	-6.0	

This report shall not be reproduced except in full, without the written approval of UL Verification Services Inc.

WCDMA

Band

Band 2

HSDPA

High Frequency Substitution Measurement
UL Verification Services, Inc.

Company: LG
Project #: 15I20243
Date: 3/18/2015
Test Engineer: R.Z
Configuration: EUT Only
Location: Chamber G
Mode: HSDPA Band 2 Fundamentals

Test Equpment:
Receiving: Horn T862, and Chamber G SMA Cables
Substitution: Horn T59, 6ft SMA Cable

f MHz	SG reading (dBm)	Ant. Pol. (H/V)	Cable Loss (dB)	Antenna Gain (dBi)	EIRP (dBm)	Limit (dBm)	Delta (dB)	Notes
Low Ch								
1852.40	16.20	V	0.9	9.2	24.50	33.0	-8.5	
1852.40	17.70	H	0.9	9.2	26.00	33.0	-7.0	
Mid Ch								
1880.00	16.70	V	0.9	9.2	25.00	33.0	-8.0	
1880.00	18.30	H	0.9	9.2	26.60	33.0	-6.4	
High Ch								
1907.60	16.40	V	0.9	9.1	24.60	33.0	-8.4	
1907.60	18.10	H	0.9	9.1	26.30	33.0	-6.7	

This report shall not be reproduced except in full, without the written approval of UL Verification Services Inc.

Band

Band 2

REL99

High Frequency Substitution Measurement
UL Verification Services, Inc.

Company: LG
Project #: 15I20243
Date: 3/18/2015
Test Engineer: R.Z
Configuration: EUT Only
Location: Chamber G
Mode: Rel99 Band 2 Fundamentals

Test Equpment:
Receiving: Horn T862, and Chamber G SMA Cables
Substitution: Horn T59, 6ft SMA Cable

f MHz	SG reading (dBm)	Ant. Pol. (H/V)	Cable Loss (dB)	Antenna Gain (dBi)	EIRP (dBm)	Limit (dBm)	Delta (dB)	Notes
Low Ch								
1852.40	16.00	V	0.9	9.2	24.30	33.0	-8.7	
1852.40	17.60	H	0.9	9.2	25.90	33.0	-7.1	
Mid Ch								
1880.00	16.80	V	0.9	9.2	25.10	33.0	-7.9	
1880.00	18.20	H	0.9	9.2	26.50	33.0	-6.5	
High Ch								
1907.60	16.50	V	0.9	9.1	24.70	33.0	-8.3	
1907.60	18.20	H	0.9	9.1	26.40	33.0	-6.6	

This report shall not be reproduced except in full, without the written approval of UL Verification Services Inc.

Band

Band 4

HSDPA

High Frequency Substitution Measurement
UL Verification Services, Inc.

Company: LG
Project #: 15I20243
Date: 3/18/2015
Test Engineer: R.Z
Configuration: EUT Only
Location: Chamber C
Mode: HSDPA Band 4 Fundamentals

Test Equpment:
Receiving: Horn T119, and Chamber C SMA Cables
Substitution: Horn T59, 6ft SMA Cable

f MHz	SG reading (dBm)	Ant. Pol. (H/V)	Cable Loss (dB)	Antenna Gain (dBi)	EIRP (dBm)	Limit (dBm)	Delta (dB)	Notes
Low Ch								
1712.40	10.20	V	0.9	7.9	17.19	33.0	-15.8	
1712.40	18.60	H	0.9	7.9	25.59	33.0	-7.4	
Mid Ch								
1732.60	11.50	V	0.9	7.9	18.47	33.0	-14.5	
1732.60	19.65	H	0.9	7.9	26.62	33.0	-6.4	
High Ch								
1752.60	13.67	V	0.9	7.9	20.65	33.0	-12.4	
1752.60	17.99	H	0.9	7.9	24.97	33.0	-8.0	

UL VERIFICATION SERVICES INC. FORM NO: CCSUP4701I
47173 BENICIA STREET, FREMONT, CA 94538, USA TEL: (510) 771-1000 FAX: (510) 661-0888
This report shall not be reproduced except in full, without the written approval of UL Verification Services Inc.

Band

Band 4

REL99

High Frequency Substitution Measurement
UL Verification Services, Inc.

Company: LG
Project #: 15I20243
Date: 3/18/2015
Test Engineer: R.Z
Configuration: EUT Only
Location: Chamber C
Mode: Rel99 Band 4 Fundamentals

Test Equpment:
Receiving: Horn T119, and Chamber C SMA Cables
Substitution: Horn T59, 6ft SMA Cable

f MHz	SG reading (dBm)	Ant. Pol. (H/V)	Cable Loss (dB)	Antenna Gain (dBi)	EIRP (dBm)	Limit (dBm)	Delta (dB)	Notes
Low Ch								
1712.40	12.20	V	0.9	7.9	19.19	33.0	-13.8	
1712.40	18.82	H	0.9	7.9	25.81	33.0	-7.2	
Mid Ch								
1732.60	12.26	V	0.9	7.9	19.23	33.0	-13.8	
1732.60	19.71	H	0.9	7.9	26.68	33.0	-6.3	
High Ch								
1752.60	12.39	V	0.9	7.9	19.37	33.0	-13.6	
1752.60	18.59	H	0.9	7.9	25.57	33.0	-7.4	

This report shall not be reproduced except in full, without the written approval of UL Verification Services Inc.

Band

Band 5

HSDPA

High Frequency Substitution Measurement
UL Verification Services, Inc.

Company: LG
Project #: 15I20243
Date: 3/18/2015
Test Engineer: R.Z
Configuration: EUT Only
Location: Chamber G
Mode: HSDPA Band 5 Fundamentals

Test Equpment:
Receiving: Hybrid T899, and Chamber G SMA Cables
Substitution: Dipole T273, 6ft SMA Cable

f MHz	SG reading (dBm)	Ant. Pol. (H/V)	Cable Loss (dB)	Antenna Gain (dBd)	ERP (dBm)	Limit (dBm)	Delta (dB)	Notes
Low Ch								
826.40	14.49	V	0.9	0.0	13.59	38.5	-24.9	
826.40	21.48	H	0.9	0.0	20.58	38.5	-17.9	
Mid Ch								
836.60	14.50	V	0.9	0.0	13.60	38.5	-24.9	
836.60	21.78	H	0.9	0.0	20.88	38.5	-17.6	
High Ch								
846.60	14.44	V	0.9	0.0	13.54	38.5	-25.0	
846.60	21.96	H	0.9	0.0	21.06	38.5	-17.4	

This report shall not be reproduced except in full, without the written approval of UL Verification Services Inc.

Band

Band 5

REL99

High Frequency Substitution Measurement
UL Verification Services, Inc.

Company: LG
Project #: 15I20243
Date: 3/20/2015
Test Engineer: R.Z
Configuration: EUT Only
Location: Chamber G
Mode: Rel99 Band 5 Fundamentals

Test Equpment:
Receiving: Hybrid T899, and Chamber G SMA Cables
Substitution: Dipole T273, 6ft SMA Cable

f MHz	SG reading (dBm)	Ant. Pol. (H/V)	Cable Loss (dB)	Antenna Gain (dBd)	ERP (dBm)	Limit (dBm)	Delta (dB)	Notes
Low Ch								
826.40	14.59	V	0.9	0.0	13.69	38.5	-24.8	
826.40	21.45	H	0.9	0.0	20.55	38.5	-18.0	
Mid Ch								
836.60	14.44	V	0.9	0.0	13.54	38.5	-25.0	
836.60	21.72	H	0.9	0.0	20.82	38.5	-17.7	
High Ch								
846.60	14.37	V	0.9	0.0	13.47	38.5	-25.0	
846.60	21.82	H	0.9	0.0	20.92	38.5	-17.6	

UL VERIFICATION SERVICES INC. FORM NO: CCSUP4701I
47173 BENICIA STREET, FREMONT, CA 94538, USA TEL: (510) 771-1000 FAX: (510) 661-0888
This report shall not be reproduced except in full, without the written approval of UL Verification Services Inc.

GSM

Band

GSM 1900

EGPRS

High Frequency Substitution Measurement
UL Verification Services, Inc.

Company: LG
Project #: 15I20243
Date: 3/21/2015
Test Engineer: R.Z
Configuration: EUT Only
Location: Chamber G
Mode: EGPRS 1900 MHz Fundamentals

Test Equipment:
Receiving: Horn T862, and Chamber G SMA Cables
Substitution: Horn T59, 6ft SMA Cable

f MHz	SG reading (dBm)	Ant. Pol. (H/V)	Cable Loss (dB)	Antenna Gain (dBi)	EIRP (dBm)	Limit (dBm)	Delta (dB)	Notes
Low Ch								
1850.20	11.20	V	0.9	9.2	19.50	33.0	-13.5	
1850.20	20.30	H	0.9	9.2	28.60	33.0	-4.4	
Mid Ch								
1880.00	11.10	V	0.9	9.2	19.40	33.0	-13.6	
1880.00	20.50	H	0.9	9.2	28.80	33.0	-4.2	
High Ch								
1909.80	10.60	V	0.9	9.1	18.80	33.0	-14.2	
1909.80	19.70	H	0.9	9.1	27.90	33.0	-5.1	

This report shall not be reproduced except in full, without the written approval of UL Verification Services Inc.

Band

GSM 1900

GPRS

High Frequency Substitution Measurement
UL Verification Services, Inc.

Company: LG
Project #: 15I20243
Date: 3/21/2015
Test Engineer: R.Z
Configuration: EUT Only
Location: Chamber G
Mode: GPRS 1900 MHz Fundamentals

Test Equipment:
Receiving: Horn T862, and Chamber G SMA Cables
Substitution: Horn T59, 6ft SMA Cable

f MHz	SG reading (dBm)	Ant. Pol. (H/V)	Cable Loss (dB)	Antenna Gain (dBi)	EIRP (dBm)	Limit (dBm)	Delta (dB)	Notes
Low Ch								
1850.20	14.40	V	0.9	9.2	22.70	33.0	-10.3	
1850.20	22.70	H	0.9	9.2	31.00	33.0	-2.0	
Mid Ch								
1880.00	14.30	V	0.9	9.2	22.60	33.0	-10.4	
1880.00	22.90	H	0.9	9.2	31.20	33.0	-1.8	
High Ch								
1909.80	14.24	V	0.9	9.1	22.44	33.0	-10.6	
1909.80	23.00	H	0.9	9.1	31.20	33.0	-1.8	

UL VERIFICATION SERVICES INC. FORM NO: CCSUP4701I
47173 BENICIA STREET, FREMONT, CA 94538, USA TEL: (510) 771-1000 FAX: (510) 661-0888
This report shall not be reproduced except in full, without the written approval of UL Verification Services Inc.

Band

GSM 850

EGPRS

High Frequency Substitution Measurement
UL Verification Services, Inc.

Company: LG
Project #: 15I20243
Date: 3/18/2015
Test Engineer: R.Z
Configuration: EUT Only
Location: Chamber G
Mode: EGPRS 850 MHz Fundamentals

Test Equpment:
Receiving: Hybrid T899, and Chamber G SMA Cables
Substitution: Dipole T273, 6ft SMA Cable

f MHz	SG reading (dBm)	Ant. Pol. (H/V)	Cable Loss (dB)	Antenna Gain (dBd)	ERP (dBm)	Limit (dBm)	Delta (dB)	Notes
Low Ch								
824.20	17.79	V	0.9	0.0	16.89	38.5	-21.6	
824.20	26.98	H	0.9	0.0	26.08	38.5	-12.4	
Mid Ch								
836.60	19.90	V	0.9	0.0	19.00	38.5	-19.5	
836.60	27.01	H	0.9	0.0	26.11	38.5	-12.4	
High Ch								
848.80	21.14	V	0.9	0.0	20.24	38.5	-18.3	
848.80	28.82	H	0.9	0.0	27.92	38.5	-10.6	

This report shall not be reproduced except in full, without the written approval of UL Verification Services Inc.

Band

GSM 850

GPRS

High Frequency Substitution Measurement
UL Verification Services, Inc.

Company: LG
Project #: 15I20243
Date: 3/18/2015
Test Engineer: R.Z
Configuration: EUT Only
Location: Chamber G
Mode: GPRS 850 MHz Fundamentals

Test Equipment:
Receiving: Hybrid T899, and Chamber G SMA Cables
Substitution: Dipole T273, 6ft SMA Cable

f MHz	SG reading (dBm)	Ant. Pol. (H/V)	Cable Loss (dB)	Antenna Gain (dBd)	ERP (dBm)	Limit (dBm)	Delta (dB)	Notes
Low Ch								
824.20	21.19	V	0.9	0.0	20.29	38.5	-18.2	
824.20	30.38	H	0.9	0.0	29.48	38.5	-9.0	
Mid Ch								
836.60	22.75	V	0.9	0.0	21.85	38.5	-16.7	
836.60	31.16	H	0.9	0.0	30.26	38.5	-8.2	
High Ch								
848.80	23.04	V	0.9	0.0	22.14	38.5	-16.4	
848.80	32.02	H	0.9	0.0	31.12	38.5	-7.4	

This report shall not be reproduced except in full, without the written approval of UL Verification Services Inc.

9.2. FIELD STRENGTH OF SPURIOUS RADIATION

RULE PART(S)

FCC: §2.1053, §22.917, §24.238, and §27.53

LIMIT

The power of any emission outside of the authorized operating frequency ranges must be attenuated below the transmitting power (P) by a factor of at least 43 + 10 log (P) dB.

Part 27: (m)(4) For mobile station, the attenuation factor shall be not less than 43+10Log(P)dB at the channel edge and (55+10Log(P)dB) at 5.5MHz from the channel edges.

UL VERIFICATION SERVICES INC. FORM NO: CCSUP4701I
47173 BENICIA STREET, FREMONT, CA 94538, USA TEL: (510) 771-1000 FAX: (510) 661-0888

This report shall not be reproduced except in full, without the written approval of UL Verification Services Inc.

TEST PROCEDURE

For Cellular equipment - Compliance with these rules is based on the use of measurement instrumentation employing a resolution bandwidth of 100 kHz or greater. In the 1 MHz bands immediately outside and adjacent to the frequency block a resolution bandwidth of at least one percent of the emission bandwidth of the fundamental emission of the transmitter may be employed. A narrower resolution bandwidth is permitted in all cases to improve measurement accuracy provided the measured power is integrated over the full required measurement bandwidth (i.e. 100 kHz or 1 percent of emission bandwidth, as specified). The emission bandwidth is defined as the width of the signal between two points, one below the carrier center frequency and one above the carrier center frequency, outside of which all emissions are attenuated at least 26 dB below the transmitter power.

For PCS equipment - Compliance with these rules is based on the use of measurement instrumentation employing a resolution bandwidth of 1 MHz or greater. However, in the 1 MHz bands immediately outside and adjacent to the frequency block a resolution bandwidth of at least one percent of the emission bandwidth of the fundamental emission of the transmitter may be employed. A narrower resolution bandwidth is permitted in all cases to improve measurement accuracy provided the measured power is integrated over the full required measurement bandwidth (i.e. 1 MHz or 1 percent of emission bandwidth, as specified). The emission bandwidth is defined as the width of the signal between two points, one below the carrier center frequency and one above the carrier center frequency, outside of which all emissions are attenuated at least 26 dB below the transmitter power.

MODES TESTED

GSM, WCDMA, and LTE

RESULTS

UL VERIFICATION SERVICES INC. FORM NO: CCSUP4701I
47173 BENICIA STREET, FREMONT, CA 94538, USA TEL: (510) 771-1000 FAX: (510) 661-0888

This report shall not be reproduced except in full, without the written approval of UL Verification Services Inc.

9.2.1. SPURIOUS RADIATION PLOTS

LTE Band 12

UL Verification Services, Inc.
Above 1GHz High Frequency Substitution Measurement

Company: LG Electronics
Project #: 15I20243
Date: 03/16/15
Test Engineer: R.Zheng
Configuration: EUT , AC Adapter
Location: Chamber G
Mode: LTE_16QAM Band 12 Harmonics, 10MHz Bandwidth

Band
LTE12
10MHz
16QAM

f MHz	SG reading (dBm)	Ant. Pol. (H/V)	Distance (m)	Preamp (dB)	Filter (dB)	EIRP (dBm)	Limit (dBm)	Delta (dB)	Notes
Low Ch,704									
1408.00	-0.4	V	3.0	37.4	1.0	-36.8	-13.0	-23.8	
2112.00	-8.7	V	3.0	36.6	1.0	-44.2	-13.0	-31.2	
2816.00	-15.5	V	3.0	36.4	1.0	-50.9	-13.0	-37.9	
1408.00	-7.5	H	3.0	37.4	1.0	-43.8	-13.0	-30.8	
2112.00	-13.5	H	3.0	36.6	1.0	-49.1	-13.0	-36.1	
2816.00	-16.8	H	3.0	36.4	1.0	-52.2	-13.0	-39.2	
Mid Ch,707.5									
1415.00	0.4	V	3.0	37.3	1.0	-35.9	-13.0	-22.9	
2122.50	-5.0	V	3.0	36.6	1.0	-40.6	-13.0	-27.6	
2830.00	-6.5	V	3.0	36.4	1.0	-41.9	-13.0	-28.9	
1415.00	0.7	H	3.0	37.3	1.0	-35.7	-13.0	-22.7	
2122.50	-7.3	H	3.0	36.6	1.0	-42.9	-13.0	-29.9	
2830.00	-6.6	H	3.0	36.4	1.0	-42.0	-13.0	-29.0	
High Ch,711									
1422.00	1.8	V	3.0	37.3	1.0	-34.5	-13.0	-21.5	
2133.00	-7.9	V	3.0	36.6	1.0	-43.4	-13.0	-30.4	
2844.00	-14.6	V	3.0	36.4	1.0	-50.0	-13.0	-37.0	
1422.00	-11.1	H	3.0	37.3	1.0	-47.4	-13.0	-34.4	
2133.00	-8.8	H	3.0	36.6	1.0	-44.4	-13.0	-31.4	
2844.00	-18.5	H	3.0	36.4	1.0	-53.9	-13.0	-40.9	

This report shall not be reproduced except in full, without the written approval of UL Verification Services Inc.

UL Verification Services, Inc.
Above 1GHz High Frequency Substitution Measurement

Company: LG Electronics
Project #: 15I20243
Date: 03/16/15
Test Engineer: R.Zheng
Configuration: EUT , AC Adapter
Location: Chamber G
Mode: LTE_QPSK Band 12 Harmonics, 10MHz Bandwidth

Band
LTE12
10MHz
QPSK

f MHz	SG reading (dBm)	Ant. Pol. (H/V)	Distance (m)	Preamp (dB)	Filter (dB)	EIRP (dBm)	Limit (dBm)	Delta (dB)	Notes
Low Ch,704									
1408.00	1.9	V	3.0	37.4	1.0	-34.5	-13.0	-21.5	
2112.00	-7.3	V	3.0	36.6	1.0	-42.9	-13.0	-29.9	
2816.00	-13.7	V	3.0	36.4	1.0	-49.1	-13.0	-36.1	
1408.00	-8.5	H	3.0	37.4	1.0	-44.8	-13.0	-31.8	
2112.00	-12.0	H	3.0	36.6	1.0	-47.6	-13.0	-34.6	
2816.00	-14.6	H	3.0	36.4	1.0	-50.0	-13.0	-37.0	
Mid Ch,707.5									
1415.00	1.6	V	3.0	37.3	1.0	-34.7	-13.0	-21.7	
2122.50	-4.0	V	3.0	36.6	1.0	-39.6	-13.0	-26.6	
2830.00	-4.8	V	3.0	36.4	1.0	-40.2	-13.0	-27.2	
1415.00	-1.3	H	3.0	37.3	1.0	-37.7	-13.0	-24.7	
2122.50	-6.4	H	3.0	36.6	1.0	-42.0	-13.0	-29.0	
2830.00	-3.6	H	3.0	36.4	1.0	-38.9	-13.0	-25.9	
High Ch,711									
1422.00	1.6	V	3.0	37.3	1.0	-34.7	-13.0	-21.7	
2133.00	-6.8	V	3.0	36.6	1.0	-42.4	-13.0	-29.4	
2844.00	-13.3	V	3.0	36.4	1.0	-48.7	-13.0	-35.7	
1422.00	-12.0	H	3.0	37.3	1.0	-48.3	-13.0	-35.3	
2133.00	-7.5	H	3.0	36.6	1.0	-43.0	-13.0	-30.0	
2844.00	-16.8	H	3.0	36.4	1.0	-52.1	-13.0	-39.1	

UL VERIFICATION SERVICES INC. FORM NO: CCSUP4701I
47173 BENICIA STREET, FREMONT, CA 94538, USA TEL: (510) 771-1000 FAX: (510) 661-0888
This report shall not be reproduced except in full, without the written approval of UL Verification Services Inc.

UL Verification Services, Inc.
Above 1GHz High Frequency Substitution Measurement

Company: LG Electronics
Project #: 15I20243
Date: 03/16/15
Test Engineer: R.Zheng
Configuration: EUT , AC Adapter
Location: Chamber G
Mode: LTE_16QAM Band 12 Harmonics, 5MHz Bandwidth

Band
LTE12
5MHz
16QAM

f MHz	SG reading (dBm)	Ant. Pol. (H/V)	Distance (m)	Preamp (dB)	Filter (dB)	EIRP (dBm)	Limit (dBm)	Delta (dB)	Notes
Low Ch, 701.50									
1403.00	-1.5	V	3.0	37.4	1.0	-37.9	-13.0	-24.9	
2104.50	-8.4	V	3.0	36.6	1.0	-44.0	-13.0	-31.0	
2806.00	-16.1	V	3.0	36.4	1.0	-51.5	-13.0	-38.5	
1403.00	-3.1	H	3.0	37.4	1.0	-39.5	-13.0	-26.5	
2104.50	-10.6	H	3.0	36.6	1.0	-46.2	-13.0	-33.2	
2806.00	-18.9	H	3.0	36.4	1.0	-54.3	-13.0	-41.3	
Mid Ch, 707.50									
1415.00	1.5	V	3.0	37.3	1.0	-34.8	-13.0	-21.8	
2122.50	-2.1	V	3.0	36.6	1.0	-37.7	-13.0	-24.7	
2830.00	-15.3	V	3.0	36.4	1.0	-50.7	-13.0	-37.7	
1415.00	-2.8	H	3.0	37.3	1.0	-39.2	-13.0	-26.2	
2122.50	-5.5	H	3.0	36.6	1.0	-41.1	-13.0	-28.1	
2830.00	-16.0	H	3.0	36.4	1.0	-51.4	-13.0	-38.4	
High Ch, 713.50									
1427.00	-0.6	V	3.0	37.3	1.0	-36.9	-13.0	-23.9	
2140.50	-7.6	V	3.0	36.6	1.0	-43.1	-13.0	-30.1	
2854.00	-16.6	V	3.0	36.4	1.0	-51.9	-13.0	-38.9	
1427.00	-3.8	H	3.0	37.3	1.0	-40.1	-13.0	-27.1	
2140.50	-10.1	H	3.0	36.6	1.0	-45.7	-13.0	-32.7	
2854.00	-19.5	H	3.0	36.4	1.0	-54.9	-13.0	-41.9	

UL VERIFICATION SERVICES INC. FORM NO: CCSUP4701I
47173 BENICIA STREET, FREMONT, CA 94538, USA TEL: (510) 771-1000 FAX: (510) 661-0888
This report shall not be reproduced except in full, without the written approval of UL Verification Services Inc.

UL Verification Services, Inc.
Above 1GHz High Frequency Substitution Measurement

Company: LG Electronics
Project #: 15I20243
Date: 03/16/15
Test Engineer: R.Zheng
Configuration: EUT , AC Adapter
Location: Chamber G
Mode: LTE_QPSK Band 12 Harmonics, 5MHz Bandwidth

Band
LTE12
5MHz
QPSK

f MHz	SG reading (dBm)	Ant. Pol. (H/V)	Distance (m)	Preamp (dB)	Filter (dB)	EIRP (dBm)	Limit (dBm)	Delta (dB)	Notes
Low Ch, 701.50									
1403.00	0.3	V	3.0	37.4	1.0	-36.1	-13.0	-23.1	
2104.50	-6.2	V	3.0	36.6	1.0	-41.7	-13.0	-28.7	
2806.00	-14.1	V	3.0	36.4	1.0	-49.5	-13.0	-36.5	
1403.00	-7.1	H	3.0	37.4	1.0	-43.4	-13.0	-30.4	
2104.50	-10.9	H	3.0	36.6	1.0	-46.5	-13.0	-33.5	
2806.00	-16.0	H	3.0	36.4	1.0	-51.4	-13.0	-38.4	
Mid Ch, 707.50									
1415.00	5.5	V	3.0	37.3	1.0	-30.8	-13.0	-17.8	
2122.50	-3.3	V	3.0	36.6	1.0	-38.9	-13.0	-25.9	
2830.00	-6.0	V	3.0	36.4	1.0	-41.4	-13.0	-28.4	
1415.00	-2.2	H	3.0	37.3	1.0	-38.6	-13.0	-25.6	
2122.50	-6.6	H	3.0	36.6	1.0	-42.2	-13.0	-29.2	
2830.00	1.1	H	3.0	36.4	1.0	-34.3	-13.0	-21.3	
High Ch, 713.50									
1427.00	2.5	V	3.0	37.3	1.0	-33.8	-13.0	-20.8	
2140.50	-5.2	V	3.0	36.6	1.0	-40.7	-13.0	-27.7	
2854.00	-12.3	V	3.0	36.4	1.0	-47.7	-13.0	-34.7	
1427.00	-8.0	H	3.0	37.3	1.0	-44.3	-13.0	-31.3	
2140.50	-7.7	H	3.0	36.6	1.0	-43.2	-13.0	-30.2	
2854.00	-13.8	H	3.0	36.4	1.0	-49.1	-13.0	-36.1	

UL VERIFICATION SERVICES INC. FORM NO: CCSUP4701I
47173 BENICIA STREET, FREMONT, CA 94538, USA TEL: (510) 771-1000 FAX: (510) 661-0888
This report shall not be reproduced except in full, without the written approval of UL Verification Services Inc.

UL Verification Services, Inc.
Above 1GHz High Frequency Substitution Measurement

Company: LG Electronics
Project #: 15I20243
Date: 03/16/15
Test Engineer: R.Zheng
Configuration: EUT , AC Adapter
Location: Chamber G
Mode: LTE_16QAM Band 12 Harmonics, 3MHz Bandwidth

Band
LTE12
3MHz
16QAM

f MHz	SG reading (dBm)	Ant. Pol. (H/V)	Distance (m)	Preamp (dB)	Filter (dB)	EIRP (dBm)	Limit (dBm)	Delta (dB)	Notes
Low Ch, 700.5									
1401.00	-2.2	V	3.0	37.4	1.0	-38.5	-13.0	-25.5	
2101.50	-9.2	V	3.0	36.6	1.0	-44.8	-13.0	-31.8	
2802.00	-12.4	V	3.0	36.4	1.0	-47.8	-13.0	-34.8	
1401.00	-3.2	H	3.0	37.4	1.0	-39.5	-13.0	-26.5	
2101.50	-12.2	H	3.0	36.6	1.0	-47.8	-13.0	-34.8	
2802.00	-13.5	H	3.0	36.4	1.0	-48.9	-13.0	-35.9	
Mid Ch, 707.50									
1415.00	0.6	V	3.0	37.3	1.0	-35.7	-13.0	-22.7	
2122.00	-1.0	V	3.0	36.6	1.0	-36.6	-13.0	-23.6	
2830.00	5.7	V	3.0	36.4	1.0	-29.7	-13.0	-16.7	
1415.00	-3.8	H	3.0	37.3	1.0	-40.2	-13.0	-27.2	
2122.00	-5.0	H	3.0	36.6	1.0	-40.6	-13.0	-27.6	
2830.00	-10.7	H	3.0	36.4	1.0	-46.0	-13.0	-33.0	
High Ch, 714.5									
1429.00	0.0	V	3.0	37.3	1.0	-36.3	-13.0	-23.3	
2143.50	-3.3	V	3.0	36.6	1.0	-38.9	-13.0	-25.9	
2858.00	-9.4	V	3.0	36.4	1.0	-44.8	-13.0	-31.8	
1429.00	-3.9	H	3.0	37.3	1.0	-40.2	-13.0	-27.2	
2143.50	-7.1	H	3.0	36.6	1.0	-42.6	-13.0	-29.6	
2858.00	-14.3	H	3.0	36.4	1.0	-49.7	-13.0	-36.7	

UL VERIFICATION SERVICES INC. FORM NO: CCSUP4701I
47173 BENICIA STREET, FREMONT, CA 94538, USA TEL: (510) 771-1000 FAX: (510) 661-0888
This report shall not be reproduced except in full, without the written approval of UL Verification Services Inc.

UL Verification Services, Inc.
Above 1GHz High Frequency Substitution Measurement

Company: LG Electronics
Project #: 15I20243
Date: 03/16/15
Test Engineer: R.Zheng
Configuration: EUT , AC Adapter
Location: Chamber G
Mode: LTE_QPSK Band 12 Harmonics, 3MHz Bandwidth

Band
LTE12
3MHz
QPSK

f MHz	SG reading (dBm)	Ant. Pol. (H/V)	Distance (m)	Preamp (dB)	Filter (dB)	EIRP (dBm)	Limit (dBm)	Delta (dB)	Notes
Low Ch, 700.5									
1401.00	1.1	V	3.0	37.4	1.0	-35.3	-13.0	-22.3	
2101.50	-7.0	V	3.0	36.6	1.0	-42.5	-13.0	-29.5	
2802.00	-14.2	V	3.0	36.4	1.0	-49.6	-13.0	-36.6	
1401.00	-5.6	H	3.0	37.4	1.0	-41.9	-13.0	-28.9	
2101.50	-10.9	H	3.0	36.6	1.0	-46.4	-13.0	-33.4	
2802.00	-15.2	H	3.0	36.4	1.0	-50.6	-13.0	-37.6	
Mid Ch, 707.50									
1415.00	4.0	V	3.0	37.3	1.0	-32.3	-13.0	-19.3	
2122.00	-2.4	V	3.0	36.6	1.0	-38.0	-13.0	-25.0	
2830.00	-10.6	V	3.0	36.4	1.0	-46.0	-13.0	-33.0	
1415.00	-5.3	H	3.0	37.3	1.0	-41.7	-13.0	-28.7	
2122.00	-6.7	H	3.0	36.6	1.0	-42.3	-13.0	-29.3	
2830.00	6.5	H	3.0	36.4	1.0	-28.8	-13.0	-15.8	
High Ch, 714.5									
1429.00	3.8	V	3.0	37.3	1.0	-32.5	-13.0	-19.5	
2143.50	0.7	V	3.0	36.6	1.0	-34.8	-13.0	-21.8	
2858.00	-10.8	V	3.0	36.4	1.0	-46.1	-13.0	-33.1	
1429.00	-4.7	H	3.0	37.3	1.0	-41.1	-13.0	-28.1	
2143.50	-6.4	H	3.0	36.6	1.0	-41.9	-13.0	-28.9	
2858.00	-13.4	H	3.0	36.4	1.0	-48.8	-13.0	-35.8	

This report shall not be reproduced except in full, without the written approval of UL Verification Services Inc.

UL Verification Services, Inc.
Above 1GHz High Frequency Substitution Measurement

Company: LG Electronics
Project #: 15I20243
Date: 03/16/15
Test Engineer: R.Zheng
Configuration: EUT , AC Adapter
Location: Chamber G
Mode: LTE_16QAM Band 12 Harmonics, 1.4MHz Bandwidth

Band
LTE12
1.4MHz
16QAM

f MHz	SG reading (dBm)	Ant. Pol. (H/V)	Distance (m)	Preamp (dB)	Filter (dB)	EIRP (dBm)	Limit (dBm)	Delta (dB)	Notes
Low Ch, 699.7									
1399.40	-0.7	V	3.0	37.4	1.0	-37.1	-13.0	-24.1	
2099.10	-9.7	V	3.0	36.6	1.0	-45.3	-13.0	-32.3	
2798.80	-15.9	V	3.0	36.4	1.0	-51.3	-13.0	-38.3	
1399.40	-3.1	H	3.0	37.4	1.0	-39.4	-13.0	-26.4	
2099.10	-11.4	H	3.0	36.6	1.0	-47.0	-13.0	-34.0	
2798.80	-18.0	H	3.0	36.4	1.0	-53.4	-13.0	-40.4	
Mid Ch, 707.50									
1415.00	0.8	V	3.0	37.3	1.0	-35.6	-13.0	-22.6	
2122.00	-2.8	V	3.0	36.6	1.0	-38.4	-13.0	-25.4	
2830.00	-3.8	V	3.0	36.4	1.0	-39.2	-13.0	-26.2	
1415.00	-5.5	H	3.0	37.3	1.0	-41.8	-13.0	-28.8	
2122.00	-10.1	H	3.0	36.6	1.0	-45.7	-13.0	-32.7	
2830.00	5.1	H	3.0	36.4	1.0	-30.3	-13.0	-17.3	
High Ch, 715.3									
1430.60	-1.3	V	3.0	37.3	1.0	-37.6	-13.0	-24.6	
2145.90	-8.9	V	3.0	36.6	1.0	-44.4	-13.0	-31.4	
2861.20	-18.1	V	3.0	36.4	1.0	-53.4	-13.0	-40.4	
1430.60	-2.9	H	3.0	37.3	1.0	-39.2	-13.0	-26.2	
2145.90	-8.9	H	3.0	36.6	1.0	-44.5	-13.0	-31.5	
2861.20	-18.0	H	3.0	36.4	1.0	-53.4	-13.0	-40.4	

UL VERIFICATION SERVICES INC. FORM NO: CCSUP4701I
47173 BENICIA STREET, FREMONT, CA 94538, USA TEL: (510) 771-1000 FAX: (510) 661-0888
This report shall not be reproduced except in full, without the written approval of UL Verification Services Inc.

UL Verification Services, Inc.
Above 1GHz High Frequency Substitution Measurement

Company: LG Electronics
Project #: 15I20243
Date: 03/16/15
Test Engineer: R.Zheng
Configuration: EUT , AC Adapter
Location: Chamber G
Mode: LTE_QPSK Band 12 Harmonics, 1.4MHz Bandwidth

Band
LTE12
1.4MHz
QPSK

f MHz	SG reading (dBm)	Ant. Pol. (H/V)	Distance (m)	Preamp (dB)	Filter (dB)	EIRP (dBm)	Limit (dBm)	Delta (dB)	Notes
Low Ch, 699.7									
1399.40	-0.1	V	3.0	37.4	1.0	-36.5	-13.0	-23.5	
2099.10	-7.2	V	3.0	36.6	1.0	-42.8	-13.0	-29.8	
2798.80	-14.9	V	3.0	36.4	1.0	-50.3	-13.0	-37.3	
1399.40	-6.4	H	3.0	37.4	1.0	-42.7	-13.0	-29.7	
2099.10	-10.5	H	3.0	36.6	1.0	-46.1	-13.0	-33.1	
2798.80	-15.1	H	3.0	36.4	1.0	-50.5	-13.0	-37.5	
Mid Ch, 707.50									
1415.00	3.4	V	3.0	37.3	1.0	-32.9	-13.0	-19.9	
2122.00	-3.0	V	3.0	36.6	1.0	-38.6	-13.0	-25.6	
2830.00	9.8	V	3.0	36.4	1.0	-25.6	-13.0	-12.6	
1415.00	-5.0	H	3.0	37.3	1.0	-41.4	-13.0	-28.4	
2122.00	-6.4	H	3.0	36.6	1.0	-42.0	-13.0	-29.0	
2830.00	-2.2	H	3.0	36.4	1.0	-37.5	-13.0	-24.5	
High Ch, 715.3									
1430.60	2.5	V	3.0	37.3	1.0	-33.8	-13.0	-20.8	
2145.90	-5.3	V	3.0	36.6	1.0	-40.8	-13.0	-27.8	
2861.20	-13.5	V	3.0	36.4	1.0	-48.9	-13.0	-35.9	
1430.60	-0.8	H	3.0	37.3	1.0	-37.1	-13.0	-24.1	
2145.90	-11.6	H	3.0	36.6	1.0	-47.1	-13.0	-34.1	
2861.20	-16.7	H	3.0	36.4	1.0	-52.1	-13.0	-39.1	

UL VERIFICATION SERVICES INC. FORM NO: CCSUP4701I
47173 BENICIA STREET, FREMONT, CA 94538, USA TEL: (510) 771-1000 FAX: (510) 661-0888
This report shall not be reproduced except in full, without the written approval of UL Verification Services Inc.

LTE Band 4

Band

LTE4

20MHz

16QAM

UL Verification Services, Inc.
Above 1GHz High Frequency Substitution Measurement

Company: LG
Project #: 15I20243
Date: 3/13/2015
Test Engineer: R.Z
Configuration: EUT , AC Adapter and Headset
Location: Chamber G
Mode: LTE_16QAM Band 4 Harmonics, 20MHz Bandwidth

f MHz	SG reading (dBm)	Ant. Pol. (H/V)	Distance (m)	Preamp (dB)	Filter (dB)	EIRP (dBm)	Limit (dBm)	Delta (dB)	Notes
Low Ch, 1720									
3440.00	-3.2	V	3.0	36.0	1.0	-38.2	-13.0	-25.2	
5160.00	1.3	V	3.0	35.4	1.0	-33.1	-13.0	-20.1	
6880.00	-13.9	V	3.0	35.7	1.0	-48.6	-13.0	-35.6	
3440.00	-3.1	H	3.0	36.0	1.0	-38.1	-13.0	-25.1	
5160.00	-4.2	H	3.0	35.4	1.0	-38.6	-13.0	-25.6	
6880.00	-12.4	H	3.0	35.7	1.0	-47.1	-13.0	-34.1	
Mid Ch, 1732.5									
3465.00	0.1	V	3.0	36.0	1.0	-35.0	-13.0	-22.0	
5197.50	2.4	V	3.0	35.4	1.0	-32.0	-13.0	-19.0	
6930.00	-14.4	V	3.0	35.7	1.0	-49.0	-13.0	-36.0	
3465.00	-0.2	H	3.0	36.0	1.0	-35.2	-13.0	-22.2	
5197.50	-2.8	H	3.0	35.4	1.0	-37.2	-13.0	-24.2	
6930.00	-12.0	H	3.0	35.7	1.0	-46.6	-13.0	-33.6	
High Ch, 1745									
3490.00	2.9	V	3.0	36.0	1.0	-32.2	-13.0	-19.2	
5235.00	0.6	V	3.0	35.4	1.0	-33.8	-13.0	-20.8	
6980.00	-13.9	V	3.0	35.7	1.0	-48.6	-13.0	-35.6	
3490.00	1.9	H	3.0	36.0	1.0	-33.1	-13.0	-20.1	
5235.00	-2.1	H	3.0	35.4	1.0	-36.6	-13.0	-23.6	
6980.00	-12.7	H	3.0	35.7	1.0	-47.4	-13.0	-34.4	

UL VERIFICATION SERVICES INC. FORM NO: CCSUP4701I
47173 BENICIA STREET, FREMONT, CA 94538, USA TEL: (510) 771-1000 FAX: (510) 661-0888

This report shall not be reproduced except in full, without the written approval of UL Verification Services Inc.

Band

LTE4

20MHz

QPSK

UL Verification Services, Inc.
Above 1GHz High Frequency Substitution Measurement

Company: LG
Project #: 15I20243
Date: 3/13/2015
Test Engineer: R.Z
Configuration: EUT , AC Adapter and Headset
Location: Chamber G
Mode: LTE_QPSK Band 4 Harmonics, 20MHz Bandwidth

f MHz	SG reading (dBm)	Ant. Pol. (H/V)	Distance (m)	Preamp (dB)	Filter (dB)	EIRP (dBm)	Limit (dBm)	Delta (dB)	Notes
Low Ch, 1720									
3440.00	-2.2	V	3.0	36.0	1.0	-37.2	-13.0	-24.2	
5160.00	0.3	V	3.0	35.4	1.0	-34.1	-13.0	-21.1	
6880.00	-13.5	V	3.0	35.7	1.0	-48.2	-13.0	-35.2	
3440.00	-2.6	H	3.0	36.0	1.0	-37.6	-13.0	-24.6	
5160.00	-2.5	H	3.0	35.4	1.0	-36.9	-13.0	-23.9	
6880.00	-12.2	H	3.0	35.7	1.0	-46.9	-13.0	-33.9	
Mid Ch, 1732.5									
3465.00	1.6	V	3.0	36.0	1.0	-33.5	-13.0	-20.5	
5197.50	2.3	V	3.0	35.4	1.0	-32.1	-13.0	-19.1	
6930.00	-13.7	V	3.0	35.7	1.0	-48.3	-13.0	-35.3	
3465.00	1.3	H	3.0	36.0	1.0	-33.7	-13.0	-20.7	
5197.50	-2.4	H	3.0	35.4	1.0	-36.8	-13.0	-23.8	
6930.00	-11.9	H	3.0	35.7	1.0	-46.6	-13.0	-33.6	
High Ch, 1745									
3490.00	3.9	V	3.0	36.0	1.0	-31.1	-13.0	-18.1	
5235.00	0.4	V	3.0	35.4	1.0	-34.0	-13.0	-21.0	
6980.00	-11.9	V	3.0	35.7	1.0	-46.6	-13.0	-33.6	
3490.00	5.9	H	3.0	36.0	1.0	-29.1	-13.0	-16.1	
5235.00	-1.1	H	3.0	35.4	1.0	-35.6	-13.0	-22.6	
6980.00	-13.0	H	3.0	35.7	1.0	-47.7	-13.0	-34.7	

UL VERIFICATION SERVICES INC. FORM NO: CCSUP4701I
47173 BENICIA STREET, FREMONT, CA 94538, USA TEL: (510) 771-1000 FAX: (510) 661-0888

This report shall not be reproduced except in full, without the written approval of UL Verification Services Inc.

UL Verification Services, Inc.
Above 1GHz High Frequency Substitution Measurement

Company: LG
Project #: 15I20243
Date: 3/13/2015
Test Engineer: R.Z
Configuration: EUT , AC Adapter and Headset
Location: Chamber G
Mode: LTE_16QAM Band 4 Harmonics, 15MHz Bandwidth

Band LTE4 15MHz 16QAM

f MHz	SG reading (dBm)	Ant. Pol. (H/V)	Distance (m)	Preamp (dB)	Filter (dB)	EIRP (dBm)	Limit (dBm)	Delta (dB)	Notes
Low Ch, 1717.5									
3435.00	-5.1	V	3.0	36.1	1.0	-40.2	-13.0	-27.2	
5152.50	-1.6	V	3.0	35.4	1.0	-36.0	-13.0	-23.0	
6870.00	-13.8	V	3.0	35.7	1.0	-48.5	-13.0	-35.5	
3435.00	-3.8	H	3.0	36.1	1.0	-38.8	-13.0	-25.8	
5152.50	-2.3	H	3.0	35.4	1.0	-36.7	-13.0	-23.7	
6870.00	-12.0	H	3.0	35.7	1.0	-46.7	-13.0	-33.7	
Mid Ch, 1732.5									
3465.00	-1.6	V	3.0	36.0	1.0	-36.7	-13.0	-23.7	
5197.50	2.2	V	3.0	35.4	1.0	-32.2	-13.0	-19.2	
6930.00	-14.8	V	3.0	35.7	1.0	-49.4	-13.0	-36.4	
3465.00	0.7	H	3.0	36.0	1.0	-34.3	-13.0	-21.3	
5197.50	-4.8	H	3.0	35.4	1.0	-39.2	-13.0	-26.2	
6930.00	-13.4	H	3.0	35.7	1.0	-48.1	-13.0	-35.1	
High Ch, 1747.5									
3495.00	1.5	V	3.0	36.0	1.0	-33.5	-13.0	-20.5	
5242.50	-1.4	V	3.0	35.4	1.0	-35.8	-13.0	-22.8	
6990.00	-13.9	V	3.0	35.7	1.0	-48.6	-13.0	-35.6	
3495.00	7.0	H	3.0	36.0	1.0	-28.0	-13.0	-15.0	
5242.50	-3.6	H	3.0	35.4	1.0	-38.1	-13.0	-25.1	
6990.00	-11.7	H	3.0	35.7	1.0	-46.4	-13.0	-33.4	

UL VERIFICATION SERVICES INC. FORM NO: CCSUP4701I
47173 BENICIA STREET, FREMONT, CA 94538, USA TEL: (510) 771-1000 FAX: (510) 661-0888
This report shall not be reproduced except in full, without the written approval of UL Verification Services Inc.

Band

LTE4

15MHz

QPSK

UL Verification Services, Inc.
Above 1GHz High Frequency Substitution Measurement

Company: LG
Project #: 15I20243
Date: 3/13/2015
Test Engineer: R.Z
Configuration: EUT , AC Adapter and Headset
Location: Chamber G
Mode: LTE_QPSK Band 4 Harmonics, 15MHz Bandwidth

f MHz	SG reading (dBm)	Ant. Pol. (H/V)	Distance (m)	Preamp (dB)	Filter (dB)	EIRP (dBm)	Limit (dBm)	Delta (dB)	Notes
Low Ch, 1717.5									
3435.00	-2.5	V	3.0	36.1	1.0	-37.6	-13.0	-24.6	
5152.50	1.8	V	3.0	35.4	1.0	-32.7	-13.0	-19.7	
6870.00	-13.6	V	3.0	35.7	1.0	-48.3	-13.0	-35.3	
3435.00	-2.5	H	3.0	36.1	1.0	-37.5	-13.0	-24.5	
5152.50	-5.2	H	3.0	35.4	1.0	-39.6	-13.0	-26.6	
6870.00	-11.8	H	3.0	35.7	1.0	-46.5	-13.0	-33.5	
Mid Ch, 1732.5									
3465.00	-0.8	V	3.0	36.0	1.0	-35.8	-13.0	-22.8	
5197.50	1.7	V	3.0	35.4	1.0	-32.7	-13.0	-19.7	
6930.00	-14.4	V	3.0	35.7	1.0	-49.0	-13.0	-36.0	
3465.00	4.7	H	3.0	36.0	1.0	-30.3	-13.0	-17.3	
5197.50	-2.5	H	3.0	35.4	1.0	-36.9	-13.0	-23.9	
6930.00	-12.5	H	3.0	35.7	1.0	-47.2	-13.0	-34.2	
High Ch, 1747.5									
3495.00	2.0	V	3.0	36.0	1.0	-33.0	-13.0	-20.0	
5242.50	2.8	V	3.0	35.4	1.0	-31.6	-13.0	-18.6	
6990.00	-14.2	V	3.0	35.7	1.0	-48.9	-13.0	-35.9	
3495.00	2.9	H	3.0	36.0	1.0	-32.1	-13.0	-19.1	
5242.50	-2.6	H	3.0	35.4	1.0	-37.1	-13.0	-24.1	
6990.00	-11.4	H	3.0	35.7	1.0	-46.1	-13.0	-33.1	

UL VERIFICATION SERVICES INC. FORM NO: CCSUP4701I
47173 BENICIA STREET, FREMONT, CA 94538, USA TEL: (510) 771-1000 FAX: (510) 661-0888

This report shall not be reproduced except in full, without the written approval of UL Verification Services Inc.

UL Verification Services, Inc.
Above 1GHz High Frequency Substitution Measurement

Company: LG
Project #: 15I20243
Date: 3/13/2015
Test Engineer: R.Z
Configuration: EUT , AC Adapter and Headset
Location: Chamber G
Mode: LTE_16QAM Band 4 Harmonics, 10MHz Bandwidth

Band	f MHz	SG reading (dBm)	Ant. Pol. (H/V)	Distance (m)	Preamp (dB)	Filter (dB)	EIRP (dBm)	Limit (dBm)	Delta (dB)	Notes
	Low Ch, 1715									
LTE4	3430.00	0.0	V	3.0	36.1	1.0	-35.1	-13.0	-22.1	
	5145.00	0.0	V	3.0	35.4	1.0	-34.4	-13.0	-21.4	
	6860.00	0.0	V	3.0	35.7	1.0	-34.7	-13.0	-21.7	
10MHz	3430.00	0.0	H	3.0	36.1	1.0	-35.1	-13.0	-22.1	
	5145.00	0.0	H	3.0	35.4	1.0	-34.4	-13.0	-21.4	
	6860.00	0.0	H	3.0	35.7	1.0	-34.7	-13.0	-21.7	
16QAM	Mid Ch, 1732.5									
	3465.00	0.0	V	3.0	36.0	1.0	-35.0	-13.0	-22.0	
	5197.50	0.0	V	3.0	35.4	1.0	-34.4	-13.0	-21.4	
	6930.00	0.0	V	3.0	35.7	1.0	-34.7	-13.0	-21.7	
	3465.00	0.0	H	3.0	36.0	1.0	-35.0	-13.0	-22.0	
	5197.50	0.0	H	3.0	35.4	1.0	-34.4	-13.0	-21.4	
	6930.00	0.0	H	3.0	35.7	1.0	-34.7	-13.0	-21.7	
	High Ch, 1750									
	3500.00	0.0	V	3.0	36.0	1.0	-35.0	-13.0	-22.0	
	5250.00	0.0	V	3.0	35.4	1.0	-34.4	-13.0	-21.4	
	7000.00	0.0	V	3.0	35.7	1.0	-34.7	-13.0	-21.7	
	3500.00	0.0	H	3.0	36.0	1.0	-35.0	-13.0	-22.0	
	5250.00	0.0	H	3.0	35.4	1.0	-34.4	-13.0	-21.4	
	7000.00	0.0	H	3.0	35.7	1.0	-34.7	-13.0	-21.7	

UL VERIFICATION SERVICES INC. FORM NO: CCSUP4701I
47173 BENICIA STREET, FREMONT, CA 94538, USA TEL: (510) 771-1000 FAX: (510) 661-0888
This report shall not be reproduced except in full, without the written approval of UL Verification Services Inc.

UL Verification Services, Inc.
Above 1GHz High Frequency Substitution Measurement

Company: LG
Project #: 15I20243
Date: 3/13/2015
Test Engineer: R.Z
Configuration: EUT , AC Adapter and Headset
Location: Chamber G
Mode: LTE_QPSK Band 4 Harmonics, 10MHz Bandwidth

Band
LTE4
10MHz
QPSK

f MHz	SG reading (dBm)	Ant. Pol. (H/V)	Distance (m)	Preamp (dB)	Filter (dB)	EIRP (dBm)	Limit (dBm)	Delta (dB)	Notes
Low Ch, 1715									
3430.00	0.0	V	3.0	36.1	1.0	-35.1	-13.0	-22.1	
5145.00	0.0	V	3.0	35.4	1.0	-34.4	-13.0	-21.4	
6860.00	0.0	V	3.0	35.7	1.0	-34.7	-13.0	-21.7	
3430.00	0.0	H	3.0	36.1	1.0	-35.1	-13.0	-22.1	
5145.00	0.0	H	3.0	35.4	1.0	-34.4	-13.0	-21.4	
6860.00	0.0	H	3.0	35.7	1.0	-34.7	-13.0	-21.7	
Mid Ch, 1732.5									
3465.00	0.0	V	3.0	36.0	1.0	-35.0	-13.0	-22.0	
5197.50	0.0	V	3.0	35.4	1.0	-34.4	-13.0	-21.4	
6930.00	0.0	V	3.0	35.7	1.0	-34.7	-13.0	-21.7	
3465.00	0.0	H	3.0	36.0	1.0	-35.0	-13.0	-22.0	
5197.50	0.0	H	3.0	35.4	1.0	-34.4	-13.0	-21.4	
6930.00	0.0	H	3.0	35.7	1.0	-34.7	-13.0	-21.7	
High Ch, 1750									
3500.00	0.0	V	3.0	36.0	1.0	-35.0	-13.0	-22.0	
5250.00	0.0	V	3.0	35.4	1.0	-34.4	-13.0	-21.4	
7000.00	0.0	V	3.0	35.7	1.0	-34.7	-13.0	-21.7	
3500.00	0.0	H	3.0	36.0	1.0	-35.0	-13.0	-22.0	
5250.00	0.0	H	3.0	35.4	1.0	-34.4	-13.0	-21.4	
7000.00	0.0	H	3.0	35.7	1.0	-34.7	-13.0	-21.7	

UL VERIFICATION SERVICES INC. FORM NO: CCSUP4701I
47173 BENICIA STREET, FREMONT, CA 94538, USA TEL: (510) 771-1000 FAX: (510) 661-0888
This report shall not be reproduced except in full, without the written approval of UL Verification Services Inc.

UL Verification Services, Inc.
Above 1GHz High Frequency Substitution Measurement

Company: LG
Project #: 15I20243
Date: 3/13/2015
Test Engineer: R.Z
Configuration: EUT , AC Adapter and Headset
Location: Chamber G
Mode: LTE_16QAM Band 4 Harmonics, 5MHz Bandwidth

Band LTE4 5MHz 16QAM

f MHz	SG reading (dBm)	Ant. Pol. (H/V)	Distance (m)	Preamp (dB)	Filter (dB)	EIRP (dBm)	Limit (dBm)	Delta (dB)	Notes
Low Ch, 1712.5									
3425.00	-3.6	V	3.0	36.1	1.0	-38.7	-13.0	-25.7	
5137.50	0.6	V	3.0	35.4	1.0	-33.8	-13.0	-20.8	
6850.00	-14.3	V	3.0	35.7	1.0	-48.9	-13.0	-35.9	
3425.00	-2.0	H	3.0	36.1	1.0	-37.0	-13.0	-24.0	
5137.50	-5.3	H	3.0	35.4	1.0	-39.7	-13.0	-26.7	
6850.00	-11.9	H	3.0	35.7	1.0	-46.5	-13.0	-33.5	
Mid Ch, 1732.5									
3465.00	0.7	V	3.0	36.0	1.0	-34.4	-13.0	-21.4	
5197.50	0.0	V	3.0	35.4	1.0	-34.5	-13.0	-21.5	
6930.00	-13.2	V	3.0	35.7	1.0	-47.8	-13.0	-34.8	
3465.00	2.4	H	3.0	36.0	1.0	-32.6	-13.0	-19.6	
5197.50	-2.6	H	3.0	35.4	1.0	-37.0	-13.0	-24.0	
6930.00	-11.7	H	3.0	35.7	1.0	-46.4	-13.0	-33.4	
High Ch, 1752.5									
3505.00	-3.7	V	3.0	36.0	1.0	-38.7	-13.0	-25.7	
5257.50	2.2	V	3.0	35.4	1.0	-32.2	-13.0	-19.2	
7010.00	-13.7	V	3.0	35.7	1.0	-48.4	-13.0	-35.4	
3505.00	-1.3	H	3.0	36.0	1.0	-36.3	-13.0	-23.3	
5257.50	-3.0	H	3.0	35.4	1.0	-37.4	-13.0	-24.4	
7010.00	-11.6	H	3.0	35.7	1.0	-46.3	-13.0	-33.3	

UL VERIFICATION SERVICES INC. FORM NO: CCSUP4701I
47173 BENICIA STREET, FREMONT, CA 94538, USA TEL: (510) 771-1000 FAX: (510) 661-0888
This report shall not be reproduced except in full, without the written approval of UL Verification Services Inc.

UL Verification Services, Inc.
Above 1GHz High Frequency Substitution Measurement

Company: LG
Project #: 15I20243
Date: 3/13/2015
Test Engineer: R.Z
Configuration: EUT , AC Adapter and Headset
Location: Chamber G
Mode: LTE_QPSK Band 4 Harmonics, 5MHz Bandwidth

Band LTE4 5MHz QPSK

f MHz	SG reading (dBm)	Ant. Pol. (H/V)	Distance (m)	Preamp (dB)	Filter (dB)	EIRP (dBm)	Limit (dBm)	Delta (dB)	Notes
Low Ch, 1712.5									
3425.00	-2.0	V	3.0	36.1	1.0	-37.0	-13.0	-24.0	
5137.50	0.2	V	3.0	35.4	1.0	-34.2	-13.0	-21.2	
6850.00	-12.4	V	3.0	35.7	1.0	-47.0	-13.0	-34.0	
3425.00	0.3	H	3.0	36.1	1.0	-34.8	-13.0	-21.8	
5137.50	-2.9	H	3.0	35.4	1.0	-37.3	-13.0	-24.3	
6850.00	-13.0	H	3.0	35.7	1.0	-47.6	-13.0	-34.6	
Mid Ch, 1732.5									
3465.00	-0.3	V	3.0	36.0	1.0	-35.4	-13.0	-22.4	
5197.50	1.5	V	3.0	35.4	1.0	-32.9	-13.0	-19.9	
6930.00	-14.2	V	3.0	35.7	1.0	-48.8	-13.0	-35.8	
3465.00	2.9	H	3.0	36.0	1.0	-32.1	-13.0	-19.1	
5197.50	-2.7	H	3.0	35.4	1.0	-37.1	-13.0	-24.1	
6930.00	-12.4	H	3.0	35.7	1.0	-47.1	-13.0	-34.1	
High Ch, 1752.5									
3505.00	-0.3	V	3.0	36.0	1.0	-35.3	-13.0	-22.3	
5257.50	0.8	V	3.0	35.4	1.0	-33.7	-13.0	-20.7	
7010.00	-13.2	V	3.0	35.7	1.0	-47.9	-13.0	-34.9	
3505.00	2.5	H	3.0	36.0	1.0	-32.5	-13.0	-19.5	
5257.50	-2.8	H	3.0	35.4	1.0	-37.3	-13.0	-24.3	
7010.00	-11.8	H	3.0	35.7	1.0	-46.5	-13.0	-33.5	

UL VERIFICATION SERVICES INC. FORM NO: CCSUP4701I
47173 BENICIA STREET, FREMONT, CA 94538, USA TEL: (510) 771-1000 FAX: (510) 661-0888
This report shall not be reproduced except in full, without the written approval of UL Verification Services Inc.

UL Verification Services, Inc.
Above 1GHz High Frequency Substitution Measurement

Company: LG
Project #: 15I20243
Date: 3/13/2015
Test Engineer: R.Z
Configuration: EUT , AC Adapter and Headset
Location: Chamber G
Mode: LTE_16QAM Band 4 Harmonics, 3MHz Bandwidth

Band
LTE4
3MHz
16QAM

f MHz	SG reading (dBm)	Ant. Pol. (H/V)	Distance (m)	Preamp (dB)	Filter (dB)	EIRP (dBm)	Limit (dBm)	Delta (dB)	Notes
Low Ch, 1711.5									
3423.00	-1.4	V	3.0	36.1	1.0	-36.4	-13.0	-23.4	
5134.50	0.6	V	3.0	35.4	1.0	-33.8	-13.0	-20.8	
6846.00	-14.2	V	3.0	35.7	1.0	-48.8	-13.0	-35.8	
3423.00	-0.3	H	3.0	36.1	1.0	-35.4	-13.0	-22.4	
5134.50	-4.5	H	3.0	35.4	1.0	-38.9	-13.0	-25.9	
6846.00	-12.3	H	3.0	35.7	1.0	-46.9	-13.0	-33.9	
Mid Ch, 1732.5									
3465.00	0.8	V	3.0	36.0	1.0	-34.3	-13.0	-21.3	
5197.50	0.5	V	3.0	35.4	1.0	-33.9	-13.0	-20.9	
6930.00	-13.5	V	3.0	35.7	1.0	-48.1	-13.0	-35.1	
3465.00	4.6	H	3.0	36.0	1.0	-30.4	-13.0	-17.4	
5197.50	-1.2	H	3.0	35.4	1.0	-35.6	-13.0	-22.6	
6930.00	-12.6	H	3.0	35.7	1.0	-47.3	-13.0	-34.3	
High Ch, 1753.5									
3507.00	-4.7	V	3.0	36.0	1.0	-39.7	-13.0	-26.7	
5260.50	0.7	V	3.0	35.4	1.0	-33.7	-13.0	-20.7	
7014.00	-13.1	V	3.0	35.7	1.0	-47.8	-13.0	-34.8	
3507.00	0.2	H	3.0	36.0	1.0	-34.8	-13.0	-21.8	
5260.50	-4.1	H	3.0	35.4	1.0	-38.5	-13.0	-25.5	
7014.00	-11.2	H	3.0	35.7	1.0	-45.9	-13.0	-32.9	

UL VERIFICATION SERVICES INC. FORM NO: CCSUP4701I
47173 BENICIA STREET, FREMONT, CA 94538, USA TEL: (510) 771-1000 FAX: (510) 661-0888
This report shall not be reproduced except in full, without the written approval of UL Verification Services Inc.

Band

LTE4

3MHz

QPSK

UL Verification Services, Inc.
Above 1GHz High Frequency Substitution Measurement

Company: LG
Project #: 15I20243
Date: 3/13/2015
Test Engineer: R.Z
Configuration: EUT , AC Adapter and Headset
Location: Chamber G
Mode: LTE_QPSK Band 4 Harmonics, 3MHz Bandwidth

f MHz	SG reading (dBm)	Ant. Pol. (H/V)	Distance (m)	Preamp (dB)	Filter (dB)	EIRP (dBm)	Limit (dBm)	Delta (dB)	Notes
Low Ch, 1711.5									
3423.00	-1.0	V	3.0	36.1	1.0	-36.0	-13.0	-23.0	
5134.50	1.1	V	3.0	35.4	1.0	-33.3	-13.0	-20.3	
6846.00	-13.2	V	3.0	35.7	1.0	-47.8	-13.0	-34.8	
3423.00	0.9	H	3.0	36.1	1.0	-34.2	-13.0	-21.2	
5134.50	-3.0	H	3.0	35.4	1.0	-37.4	-13.0	-24.4	
6846.00	-12.4	H	3.0	35.7	1.0	-47.0	-13.0	-34.0	
Mid Ch, 1732.5									
3465.00	1.4	V	3.0	36.0	1.0	-33.6	-13.0	-20.6	
5197.50	1.9	V	3.0	35.4	1.0	-32.5	-13.0	-19.5	
6930.00	-13.8	V	3.0	35.7	1.0	-48.4	-13.0	-35.4	
3465.00	2.0	H	3.0	36.0	1.0	-33.0	-13.0	-20.0	
5197.50	-2.9	H	3.0	35.4	1.0	-37.3	-13.0	-24.3	
6930.00	-10.7	H	3.0	35.7	1.0	-45.4	-13.0	-32.4	
High Ch, 1753.5									
3507.00	-3.9	V	3.0	36.0	1.0	-38.9	-13.0	-25.9	
5260.50	2.0	V	3.0	35.4	1.0	-32.5	-13.0	-19.5	
7014.00	-13.8	V	3.0	35.7	1.0	-48.5	-13.0	-35.5	
3507.00	5.0	H	3.0	36.0	1.0	-30.0	-13.0	-17.0	
5260.50	-1.3	H	3.0	35.4	1.0	-35.7	-13.0	-22.7	
7014.00	-12.4	H	3.0	35.7	1.0	-47.1	-13.0	-34.1	

UL VERIFICATION SERVICES INC. FORM NO: CCSUP4701I
47173 BENICIA STREET, FREMONT, CA 94538, USA TEL: (510) 771-1000 FAX: (510) 661-0888

This report shall not be reproduced except in full, without the written approval of UL Verification Services Inc.

UL Verification Services, Inc.
Above 1GHz High Frequency Substitution Measurement

Company: LG
Project #: 15I20243
Date: 3/13/2015
Test Engineer: R.Z
Configuration: EUT , AC Adapter and Headset
Location: Chamber G
Mode: LTE_16QAM Band 4 Harmonics, 1.4MHz Bandwidth

Band
LTE4
1.4MHz
16QAM

f MHz	SG reading (dBm)	Ant. Pol. (H/V)	Distance (m)	Preamp (dB)	Filter (dB)	EIRP (dBm)	Limit (dBm)	Delta (dB)	Notes
Low Ch, 1710.7									
3421.40	-5.6	V	3.0	36.1	1.0	-40.7	-13.0	-27.7	
5132.10	1.0	V	3.0	35.4	1.0	-33.5	-13.0	-20.5	
6842.80	-14.7	V	3.0	35.7	1.0	-49.3	-13.0	-36.3	
3421.40	3.2	H	3.0	36.1	1.0	-31.9	-13.0	-18.9	
5132.10	-5.0	H	3.0	35.4	1.0	-39.4	-13.0	-26.4	
6842.80	-12.1	H	3.0	35.7	1.0	-46.7	-13.0	-33.7	
Mid Ch, 1732.5									
3465.00	3.3	V	3.0	36.0	1.0	-31.8	-13.0	-18.8	
5197.50	1.4	V	3.0	35.4	1.0	-33.0	-13.0	-20.0	
6930.00	-14.4	V	3.0	35.7	1.0	-49.0	-13.0	-36.0	
3465.00	7.1	H	3.0	36.0	1.0	-27.9	-13.0	-14.9	
5197.50	-2.6	H	3.0	35.4	1.0	-37.0	-13.0	-24.0	
6930.00	-12.5	H	3.0	35.7	1.0	-47.2	-13.0	-34.2	
High Ch, 1754.3									
3508.60	-2.0	V	3.0	36.0	1.0	-37.0	-13.0	-24.0	
5262.90	1.6	V	3.0	35.4	1.0	-32.9	-13.0	-19.9	
7017.20	-13.3	V	3.0	35.7	1.0	-48.0	-13.0	-35.0	
3508.60	7.1	H	3.0	36.0	1.0	-27.9	-13.0	-14.9	
5262.90	-4.0	H	3.0	35.4	1.0	-38.4	-13.0	-25.4	
7017.20	-11.2	H	3.0	35.7	1.0	-45.9	-13.0	-32.9	

UL VERIFICATION SERVICES INC. FORM NO: CCSUP4701I
47173 BENICIA STREET, FREMONT, CA 94538, USA TEL: (510) 771-1000 FAX: (510) 661-0888
This report shall not be reproduced except in full, without the written approval of UL Verification Services Inc.

Band

LTE4

1.4MHz

QPSK

UL Verification Services, Inc.
Above 1GHz High Frequency Substitution Measurement

Company: LG
Project #: 15I20243
Date: 3/13/2015
Test Engineer: R.Z
Configuration: EUT , AC Adapter and Headset
Location: Chamber G
Mode: LTE_QPSK Band 4 Harmonics, 1.4MHz Bandwidth

f MHz	SG reading (dBm)	Ant. Pol. (H/V)	Distance (m)	Preamp (dB)	Filter (dB)	EIRP (dBm)	Limit (dBm)	Delta (dB)	Notes
Low Ch, 1710.7									
3421.40	-2.1	V	3.0	36.1	1.0	-37.1	-13.0	-24.1	
5132.10	0.0	V	3.0	35.4	1.0	-34.5	-13.0	-21.5	
6842.80	-13.6	V	3.0	35.7	1.0	-48.2	-13.0	-35.2	
3421.40	-1.7	H	3.0	36.1	1.0	-36.8	-13.0	-23.8	
5132.10	-5.0	H	3.0	35.4	1.0	-39.5	-13.0	-26.5	
6842.80	-12.6	H	3.0	35.7	1.0	-47.3	-13.0	-34.3	
Mid Ch, 1732.5									
3465.00	2.0	V	3.0	36.0	1.0	-33.0	-13.0	-20.0	
5197.50	0.1	V	3.0	35.4	1.0	-34.3	-13.0	-21.3	
6930.00	-13.7	V	3.0	35.7	1.0	-48.4	-13.0	-35.4	
3465.00	3.6	H	3.0	36.0	1.0	-31.4	-13.0	-18.4	
5197.50	-1.1	H	3.0	35.4	1.0	-35.5	-13.0	-22.5	
6930.00	-12.2	H	3.0	35.7	1.0	-46.9	-13.0	-33.9	
High Ch, 1754.3									
3508.60	-1.8	V	3.0	36.0	1.0	-36.8	-13.0	-23.8	
5262.90	0.6	V	3.0	35.4	1.0	-33.8	-13.0	-20.8	
7017.20	-13.3	V	3.0	35.7	1.0	-48.0	-13.0	-35.0	
3508.60	5.1	H	3.0	36.0	1.0	-29.9	-13.0	-16.9	
5262.90	-1.6	H	3.0	35.4	1.0	-36.0	-13.0	-23.0	
7017.20	-11.8	H	3.0	35.7	1.0	-46.5	-13.0	-33.5	

UL VERIFICATION SERVICES INC. FORM NO: CCSUP4701I
47173 BENICIA STREET, FREMONT, CA 94538, USA TEL: (510) 771-1000 FAX: (510) 661-0888
This report shall not be reproduced except in full, without the written approval of UL Verification Services Inc.

LTE Band 2

Band

LTE2

20MHz

16QAM

UL Verification Services, Inc.
Above 1GHz High Frequency Substitution Measurement

Company: LG
Project #: 15I20243
Date: 3/16/2015
Test Engineer: R.Z
Configuration: EUT , AC Adapter and Headset
Location: Chamber G
Mode: LTE_16QAM Band 2 Harmonics, 20MHz Bandwidth

f MHz	SG reading (dBm)	Ant. Pol. (H/V)	Distance (m)	Preamp (dB)	Filter (dB)	EIRP (dBm)	Limit (dBm)	Delta (dB)	Notes
Low Ch, 1860									
3720.00	-3.7	V	3.0	35.8	1.0	-38.6	-13.0	-25.6	
5580.00	-5.5	V	3.0	35.5	1.0	-40.0	-13.0	-27.0	
7440.00	-11.8	V	3.0	35.7	1.0	-46.5	-13.0	-33.5	
3720.00	-3.7	H	3.0	35.8	1.0	-38.6	-13.0	-25.6	
5580.00	-5.3	H	3.0	35.5	1.0	-39.8	-13.0	-26.8	
7440.00	-12.0	H	3.0	35.7	1.0	-46.7	-13.0	-33.7	
Mid Ch, 1880									
3760.00	-5.9	V	3.0	35.8	1.0	-40.7	-13.0	-27.7	
5640.00	-6.9	V	3.0	35.5	1.0	-41.4	-13.0	-28.4	
7520.00	-10.6	V	3.0	35.7	1.0	-45.3	-13.0	-32.3	
3760.00	-6.9	H	3.0	35.8	1.0	-41.7	-13.0	-28.7	
5640.00	-8.6	H	3.0	35.5	1.0	-43.1	-13.0	-30.1	
7520.00	-12.1	H	3.0	35.7	1.0	-46.9	-13.0	-33.9	
High Ch, 1900									
3800.00	-6.3	V	3.0	35.8	1.0	-41.1	-13.0	-28.1	
5700.00	-8.0	V	3.0	35.5	1.0	-42.4	-13.0	-29.4	
7600.00	-13.0	V	3.0	35.8	1.0	-47.7	-13.0	-34.7	
3800.00	-7.7	H	3.0	35.8	1.0	-42.5	-13.0	-29.5	
5700.00	-8.8	H	3.0	35.5	1.0	-43.3	-13.0	-30.3	
7600.00	-10.8	H	3.0	35.8	1.0	-45.6	-13.0	-32.6	

This report shall not be reproduced except in full, without the written approval of UL Verification Services Inc.

UL Verification Services, Inc.
Above 1GHz High Frequency Substitution Measurement

Company: LG
Project #: 15I20243
Date: 3/16/2015
Test Engineer: R.Z
Configuration: EUT , AC Adapter and Headset
Location: Chamber G
Mode: LTE_QPSK Band 2 Harmonics, 20MHz Bandwidth

Band LTE2 20MHz QPSK

f MHz	SG reading (dBm)	Ant. Pol. (H/V)	Distance (m)	Preamp (dB)	Filter (dB)	EIRP (dBm)	Limit (dBm)	Delta (dB)	Notes
Low Ch, 1860									
3720.00	-0.7	V	3.0	35.8	1.0	-35.5	-13.0	-22.5	
5580.00	-3.8	V	3.0	35.5	1.0	-38.3	-13.0	-25.3	
7440.00	-6.4	V	3.0	35.7	1.0	-41.1	-13.0	-28.1	
3720.00	1.4	H	3.0	35.8	1.0	-33.5	-13.0	-20.5	
5580.00	-4.4	H	3.0	35.5	1.0	-38.9	-13.0	-25.9	
7440.00	-8.7	H	3.0	35.7	1.0	-43.4	-13.0	-30.4	
Mid Ch, 1880									
3760.00	-2.7	V	3.0	35.8	1.0	-37.5	-13.0	-24.5	
5640.00	-6.5	V	3.0	35.5	1.0	-41.0	-13.0	-28.0	
7520.00	-11.5	V	3.0	35.7	1.0	-46.2	-13.0	-33.2	
3760.00	-4.1	H	3.0	35.8	1.0	-38.9	-13.0	-25.9	
5640.00	-6.9	H	3.0	35.5	1.0	-41.4	-13.0	-28.4	
7520.00	-11.1	H	3.0	35.7	1.0	-45.8	-13.0	-32.8	
High Ch, 1900									
3800.00	-5.1	V	3.0	35.8	1.0	-39.8	-13.0	-26.8	
5700.00	-7.1	V	3.0	35.5	1.0	-41.6	-13.0	-28.6	
7600.00	-11.4	V	3.0	35.8	1.0	-46.1	-13.0	-33.1	
3800.00	-5.3	H	3.0	35.8	1.0	-40.1	-13.0	-27.1	
5700.00	-6.5	H	3.0	35.5	1.0	-41.0	-13.0	-28.0	
7600.00	-11.2	H	3.0	35.8	1.0	-46.0	-13.0	-33.0	

UL VERIFICATION SERVICES INC. FORM NO: CCSUP4701I
47173 BENICIA STREET, FREMONT, CA 94538, USA TEL: (510) 771-1000 FAX: (510) 661-0888
This report shall not be reproduced except in full, without the written approval of UL Verification Services Inc.

UL Verification Services, Inc.
Above 1GHz High Frequency Substitution Measurement

Company: LG
Project #: 15I20243
Date: 3/16/2015
Test Engineer: R.Z
Configuration: EUT , AC Adapter and Headset
Location: Chamber G
Mode: LTE_16QAM Band 2 Harmonics, 15MHz Bandwidth

Band LTE2 15MHz 16QAM

f MHz	SG reading (dBm)	Ant. Pol. (H/V)	Distance (m)	Preamp (dB)	Filter (dB)	EIRP (dBm)	Limit (dBm)	Delta (dB)	Notes
Low Ch, 1857.5									
3715.00	-1.1	V	3.0	35.8	1.0	-36.0	-13.0	-23.0	
5572.50	-3.8	V	3.0	35.5	1.0	-38.3	-13.0	-25.3	
7430.00	-7.6	V	3.0	35.7	1.0	-42.3	-13.0	-29.3	
3715.00	-1.4	H	3.0	35.8	1.0	-36.3	-13.0	-23.3	
5572.50	-4.2	H	3.0	35.5	1.0	-38.6	-13.0	-25.6	
7430.00	-9.2	H	3.0	35.7	1.0	-44.0	-13.0	-31.0	
Mid Ch, 1880									
3760.00	-2.4	V	3.0	35.8	1.0	-37.2	-13.0	-24.2	
5640.00	-7.3	V	3.0	35.5	1.0	-41.8	-13.0	-28.8	
7520.00	-9.8	V	3.0	35.7	1.0	-44.5	-13.0	-31.5	
3760.00	-5.0	H	3.0	35.8	1.0	-39.8	-13.0	-26.8	
5640.00	-4.3	H	3.0	35.5	1.0	-38.8	-13.0	-25.8	
7520.00	-10.1	H	3.0	35.7	1.0	-44.8	-13.0	-31.8	
High Ch, 1902.5									
3805.00	-5.2	V	3.0	35.8	1.0	-40.0	-13.0	-27.0	
5707.50	-9.6	V	3.0	35.5	1.0	-44.1	-13.0	-31.1	
7610.00	-11.5	V	3.0	35.8	1.0	-46.3	-13.0	-33.3	
3805.00	-4.6	H	3.0	35.8	1.0	-39.4	-13.0	-26.4	
5707.50	-7.0	H	3.0	35.5	1.0	-41.5	-13.0	-28.5	
7610.00	-11.1	H	3.0	35.8	1.0	-45.9	-13.0	-32.9	

UL VERIFICATION SERVICES INC. FORM NO: CCSUP4701I
47173 BENICIA STREET, FREMONT, CA 94538, USA TEL: (510) 771-1000 FAX: (510) 661-0888
This report shall not be reproduced except in full, without the written approval of UL Verification Services Inc.

Band

LTE2

15MHz

QPSK

UL Verification Services, Inc.
Above 1GHz High Frequency Substitution Measurement

Company: LG
Project #: 15I20243
Date: 3/16/2015
Test Engineer: R.Z
Configuration: EUT , AC Adapter and Headset
Location: Chamber G
Mode: LTE_QPSK Band 2 Harmonics, 15MHz Bandwidth

f MHz	SG reading (dBm)	Ant. Pol. (H/V)	Distance (m)	Preamp (dB)	Filter (dB)	EIRP (dBm)	Limit (dBm)	Delta (dB)	Notes
Low Ch, 1857.5									
3715.00	0.1	V	3.0	35.8	1.0	-34.7	-13.0	-21.7	
5572.50	-3.0	V	3.0	35.5	1.0	-37.5	-13.0	-24.5	
7430.00	-2.3	V	3.0	35.7	1.0	-37.0	-13.0	-24.0	
3715.00	-0.8	H	3.0	35.8	1.0	-35.7	-13.0	-22.7	
5572.50	-3.4	H	3.0	35.5	1.0	-37.9	-13.0	-24.9	
7430.00	-7.9	H	3.0	35.7	1.0	-42.6	-13.0	-29.6	
Mid Ch, 1880									
3760.00	-3.5	V	3.0	35.8	1.0	-38.3	-13.0	-25.3	
5640.00	-6.2	V	3.0	35.5	1.0	-40.7	-13.0	-27.7	
7520.00	-9.2	V	3.0	35.7	1.0	-43.9	-13.0	-30.9	
3760.00	-3.9	H	3.0	35.8	1.0	-38.7	-13.0	-25.7	
5640.00	-7.2	H	3.0	35.5	1.0	-41.7	-13.0	-28.7	
7520.00	-11.2	H	3.0	35.7	1.0	-45.9	-13.0	-32.9	
High Ch, 1902.5									
3805.00	-4.3	V	3.0	35.8	1.0	-39.1	-13.0	-26.1	
5707.50	-8.5	V	3.0	35.5	1.0	-43.0	-13.0	-30.0	
7610.00	-10.5	V	3.0	35.8	1.0	-45.3	-13.0	-32.3	
3805.00	-3.8	H	3.0	35.8	1.0	-38.6	-13.0	-25.6	
5707.50	-7.2	H	3.0	35.5	1.0	-41.7	-13.0	-28.7	
7610.00	-10.5	H	3.0	35.8	1.0	-45.3	-13.0	-32.3	

UL VERIFICATION SERVICES INC. FORM NO: CCSUP4701I
47173 BENICIA STREET, FREMONT, CA 94538, USA TEL: (510) 771-1000 FAX: (510) 661-0888

This report shall not be reproduced except in full, without the written approval of UL Verification Services Inc.

UL Verification Services, Inc.
Above 1GHz High Frequency Substitution Measurement

Company: LG
Project #: 15I20243
Date: 3/16/2015
Test Engineer: R.Z
Configuration: EUT , AC Adapter and Headset
Location: Chamber G
Mode: LTE_16QAM Band 2 Harmonics, 10MHz Bandwidth

Band
LTE2
10MHz
16QAM

f MHz	SG reading (dBm)	Ant. Pol. (H/V)	Distance (m)	Preamp (dB)	Filter (dB)	EIRP (dBm)	Limit (dBm)	Delta (dB)	Notes
Low Ch, 1855									
3710.00	-1.9	V	3.0	35.9	1.0	-36.7	-13.0	-23.7	
5565.00	-3.6	V	3.0	35.5	1.0	-38.1	-13.0	-25.1	
7420.00	-0.1	V	3.0	35.7	1.0	-34.8	-13.0	-21.8	
3710.00	0.2	H	3.0	35.9	1.0	-34.6	-13.0	-21.6	
5565.00	-4.2	H	3.0	35.5	1.0	-38.6	-13.0	-25.6	
7420.00	-7.6	H	3.0	35.7	1.0	-42.3	-13.0	-29.3	
Mid Ch, 1880									
3760.00	-14.4	V	3.0	35.8	1.0	-49.2	-13.0	-36.2	
5640.00	-2.3	V	3.0	35.5	1.0	-36.8	-13.0	-23.8	
7520.00	4.3	V	3.0	35.7	1.0	-30.5	-13.0	-17.5	
3760.00	-10.1	H	3.0	35.8	1.0	-44.9	-13.0	-31.9	
5640.00	-0.2	H	3.0	35.5	1.0	-34.7	-13.0	-21.7	
7520.00	11.0	H	3.0	35.7	1.0	-23.7	-13.0	-10.7	
High Ch, 1905									
3810.00	-1.7	V	3.0	35.8	1.0	-36.5	-13.0	-23.5	
5715.00	-9.4	V	3.0	35.5	1.0	-43.9	-13.0	-30.9	
7620.00	-11.5	V	3.0	35.8	1.0	-46.3	-13.0	-33.3	
3810.00	-4.6	H	3.0	35.8	1.0	-39.4	-13.0	-26.4	
5715.00	-7.9	H	3.0	35.5	1.0	-42.4	-13.0	-29.4	
7620.00	-11.0	H	3.0	35.8	1.0	-45.7	-13.0	-32.7	

UL VERIFICATION SERVICES INC. FORM NO: CCSUP4701I
47173 BENICIA STREET, FREMONT, CA 94538, USA TEL: (510) 771-1000 FAX: (510) 661-0888
This report shall not be reproduced except in full, without the written approval of UL Verification Services Inc.

UL Verification Services, Inc.
Above 1GHz High Frequency Substitution Measurement

Company: LG
Project #: 15I20243
Date: 3/16/2015
Test Engineer: R.Z
Configuration: EUT , AC Adapter and Headset
Location: Chamber G
Mode: LTE_QPSK Band 2 Harmonics, 10MHz Bandwidth

Band LTE2 10MHz QPSK

f MHz	SG reading (dBm)	Ant. Pol. (H/V)	Distance (m)	Preamp (dB)	Filter (dB)	EIRP (dBm)	Limit (dBm)	Delta (dB)	Notes
Low Ch, 1855									
3710.00	-0.7	V	3.0	35.9	1.0	-35.6	-13.0	-22.6	
5565.00	-3.6	V	3.0	35.5	1.0	-38.1	-13.0	-25.1	
7420.00	-5.9	V	3.0	35.7	1.0	-40.6	-13.0	-27.6	
3710.00	0.0	H	3.0	35.9	1.0	-34.9	-13.0	-21.9	
5565.00	-4.0	H	3.0	35.5	1.0	-38.4	-13.0	-25.4	
7420.00	-6.9	H	3.0	35.7	1.0	-41.6	-13.0	-28.6	
Mid Ch, 1880									
3760.00	-3.7	V	3.0	35.8	1.0	-38.5	-13.0	-25.5	
5640.00	-1.8	V	3.0	35.5	1.0	-36.3	-13.0	-23.3	
7520.00	4.9	V	3.0	35.7	1.0	-29.8	-13.0	-16.8	
3760.00	-1.4	H	3.0	35.8	1.0	-36.2	-13.0	-23.2	
5640.00	-1.2	H	3.0	35.5	1.0	-35.7	-13.0	-22.7	
7520.00	10.1	H	3.0	35.7	1.0	-24.6	-13.0	-11.6	
High Ch, 1905									
3810.00	-1.2	V	3.0	35.8	1.0	-36.0	-13.0	-23.0	
5715.00	-7.6	V	3.0	35.5	1.0	-42.1	-13.0	-29.1	
7620.00	-12.8	V	3.0	35.8	1.0	-47.6	-13.0	-34.6	
3810.00	-4.7	H	3.0	35.8	1.0	-39.5	-13.0	-26.5	
5715.00	-7.5	H	3.0	35.5	1.0	-42.0	-13.0	-29.0	
7620.00	-11.0	H	3.0	35.8	1.0	-45.7	-13.0	-32.7	

UL VERIFICATION SERVICES INC. FORM NO: CCSUP4701I
47173 BENICIA STREET, FREMONT, CA 94538, USA TEL: (510) 771-1000 FAX: (510) 661-0888
This report shall not be reproduced except in full, without the written approval of UL Verification Services Inc.

Band

LTE2

5MHz

16QAM

UL Verification Services, Inc.
Above 1GHz High Frequency Substitution Measurement

Company: LG
Project #: 15I20243
Date: 3/16/2015
Test Engineer: R.Z
Configuration: EUT , AC Adapter and Headset
Location: Chamber G
Mode: LTE_16QAM Band 2 Harmonics, 5MHz Bandwidth

f MHz	SG reading (dBm)	Ant. Pol. (H/V)	Distance (m)	Preamp (dB)	Filter (dB)	EIRP (dBm)	Limit (dBm)	Delta (dB)	Notes
Low Ch, 1852.5									
3705.00	-3.1	V	3.0	35.9	1.0	-37.9	-13.0	-24.9	
5557.50	-7.3	V	3.0	35.5	1.0	-41.7	-13.0	-28.7	
7410.00	-11.3	V	3.0	35.7	1.0	-46.0	-13.0	-33.0	
3705.00	-4.8	H	3.0	35.9	1.0	-39.7	-13.0	-26.7	
5557.50	-5.5	H	3.0	35.5	1.0	-40.0	-13.0	-27.0	
7410.00	-10.9	H	3.0	35.7	1.0	-45.6	-13.0	-32.6	
Mid Ch, 1880									
3760.00	-1.2	V	3.0	35.8	1.0	-36.0	-13.0	-23.0	
5640.00	-5.6	V	3.0	35.5	1.0	-40.1	-13.0	-27.1	
7520.00	-12.1	V	3.0	35.7	1.0	-46.8	-13.0	-33.8	
3760.00	-6.7	H	3.0	35.8	1.0	-41.5	-13.0	-28.5	
5640.00	-7.6	H	3.0	35.5	1.0	-42.1	-13.0	-29.1	
7520.00	-11.2	H	3.0	35.7	1.0	-45.9	-13.0	-32.9	
High Ch, 1907.5									
3815.00	-5.8	V	3.0	35.8	1.0	-40.6	-13.0	-27.6	
5722.50	-10.0	V	3.0	35.5	1.0	-44.5	-13.0	-31.5	
7630.00	-12.0	V	3.0	35.8	1.0	-46.8	-13.0	-33.8	
3815.00	-11.7	H	3.0	35.8	1.0	-46.5	-13.0	-33.5	
5722.50	-9.2	H	3.0	35.5	1.0	-43.7	-13.0	-30.7	
7630.00	-11.9	H	3.0	35.8	1.0	-46.6	-13.0	-33.6	

UL VERIFICATION SERVICES INC. FORM NO: CCSUP4701I
47173 BENICIA STREET, FREMONT, CA 94538, USA TEL: (510) 771-1000 FAX: (510) 661-0888

This report shall not be reproduced except in full, without the written approval of UL Verification Services Inc.

UL Verification Services, Inc.
Above 1GHz High Frequency Substitution Measurement

Company: LG
Project #: 15I20243
Date: 3/16/2015
Test Engineer: R.Z
Configuration: EUT , AC Adapter and Headset
Location: Chamber G
Mode: LTE_QPSK Band 2 Harmonics, 5MHz Bandwidth

Band LTE2 5MHz QPSK

f MHz	SG reading (dBm)	Ant. Pol. (H/V)	Distance (m)	Preamp (dB)	Filter (dB)	EIRP (dBm)	Limit (dBm)	Delta (dB)	Notes
Low Ch, 1852.5									
3705.00	-1.9	V	3.0	35.9	1.0	-36.7	-13.0	-23.7	
5557.50	-6.8	V	3.0	35.5	1.0	-41.3	-13.0	-28.3	
7410.00	-11.2	V	3.0	35.7	1.0	-45.9	-13.0	-32.9	
3705.00	-3.7	H	3.0	35.9	1.0	-38.5	-13.0	-25.5	
5557.50	-4.5	H	3.0	35.5	1.0	-39.0	-13.0	-26.0	
7410.00	-10.6	H	3.0	35.7	1.0	-45.4	-13.0	-32.4	
Mid Ch, 1880									
3760.00	-1.5	V	3.0	35.8	1.0	-36.3	-13.0	-23.3	
5640.00	-6.3	V	3.0	35.5	1.0	-40.8	-13.0	-27.8	
7520.00	-11.4	V	3.0	35.7	1.0	-46.1	-13.0	-33.1	
3760.00	-4.7	H	3.0	35.8	1.0	-39.5	-13.0	-26.5	
5640.00	-7.4	H	3.0	35.5	1.0	-41.9	-13.0	-28.9	
7520.00	-10.5	H	3.0	35.7	1.0	-45.2	-13.0	-32.2	
High Ch, 1907.5									
3815.00	-5.2	V	3.0	35.8	1.0	-39.9	-13.0	-26.9	
5722.50	-9.0	V	3.0	35.5	1.0	-43.5	-13.0	-30.5	
7630.00	-11.9	V	3.0	35.8	1.0	-46.7	-13.0	-33.7	
3815.00	-11.0	H	3.0	35.8	1.0	-45.8	-13.0	-32.8	
5722.50	-8.3	H	3.0	35.5	1.0	-42.8	-13.0	-29.8	
7630.00	-10.3	H	3.0	35.8	1.0	-45.0	-13.0	-32.0	

UL VERIFICATION SERVICES INC. FORM NO: CCSUP4701I
47173 BENICIA STREET, FREMONT, CA 94538, USA TEL: (510) 771-1000 FAX: (510) 661-0888
This report shall not be reproduced except in full, without the written approval of UL Verification Services Inc.

UL Verification Services, Inc.
Above 1GHz High Frequency Substitution Measurement

Company: LG
Project #: 15I20243
Date: 3/13/2015
Test Engineer: R.Z
Configuration: EUT , AC Adapter and Headset
Location: Chamber G
Mode: LTE_16QAM Band 2 Harmonics, 3MHz Bandwidth

Band
LTE2
3MHz
16QAM

f MHz	SG reading (dBm)	Ant. Pol. (H/V)	Distance (m)	Preamp (dB)	Filter (dB)	EIRP (dBm)	Limit (dBm)	Delta (dB)	Notes
Low Ch, 1851.5									
3703.00	-0.5	V	3.0	35.9	1.0	-35.4	-13.0	-22.4	
5554.50	-3.4	V	3.0	35.5	1.0	-37.9	-13.0	-24.9	
7406.00	-9.4	V	3.0	35.7	1.0	-44.1	-13.0	-31.1	
3703.00	0.3	H	3.0	35.9	1.0	-34.6	-13.0	-21.6	
5554.50	-3.6	H	3.0	35.5	1.0	-38.1	-13.0	-25.1	
7406.00	-8.9	H	3.0	35.7	1.0	-43.6	-13.0	-30.6	
Mid Ch, 1880									
3760.00	-0.8	V	3.0	35.8	1.0	-35.6	-13.0	-22.6	
5640.00	-7.1	V	3.0	35.5	1.0	-41.6	-13.0	-28.6	
7520.00	-10.9	V	3.0	35.7	1.0	-45.7	-13.0	-32.7	
3760.00	-3.9	H	3.0	35.8	1.0	-38.7	-13.0	-25.7	
5640.00	-6.9	H	3.0	35.5	1.0	-41.3	-13.0	-28.3	
7520.00	-11.0	H	3.0	35.7	1.0	-45.7	-13.0	-32.7	
High Ch, 1908.5									
3817.00	-7.4	V	3.0	35.8	1.0	-42.1	-13.0	-29.1	
5725.50	-8.6	V	3.0	35.5	1.0	-43.1	-13.0	-30.1	
7634.00	-11.6	V	3.0	35.8	1.0	-46.4	-13.0	-33.4	
3817.00	-9.0	H	3.0	35.8	1.0	-43.8	-13.0	-30.8	
5725.50	-9.3	H	3.0	35.5	1.0	-43.8	-13.0	-30.8	
7634.00	-11.8	H	3.0	35.8	1.0	-46.5	-13.0	-33.5	

UL VERIFICATION SERVICES INC. FORM NO: CCSUP4701I
47173 BENICIA STREET, FREMONT, CA 94538, USA TEL: (510) 771-1000 FAX: (510) 661-0888
This report shall not be reproduced except in full, without the written approval of UL Verification Services Inc.

Band

LTE2

3MHz

QPSK

UL Verification Services, Inc.
Above 1GHz High Frequency Substitution Measurement

Company: LG
Project #: 15I20243
Date: 3/13/2015
Test Engineer: R.Z
Configuration: EUT , AC Adapter and Headset
Location: Chamber G
Mode: LTE_QPSK Band 2 Harmonics, 3MHz Bandwidth

f MHz	SG reading (dBm)	Ant. Pol. (H/V)	Distance (m)	Preamp (dB)	Filter (dB)	EIRP (dBm)	Limit (dBm)	Delta (dB)	Notes
Low Ch, 1851.5									
3703.00	0.7	V	3.0	35.9	1.0	-34.1	-13.0	-21.1	
5554.50	-2.9	V	3.0	35.5	1.0	-37.4	-13.0	-24.4	
7406.00	-9.0	V	3.0	35.7	1.0	-43.8	-13.0	-30.8	
3703.00	0.7	H	3.0	35.9	1.0	-34.2	-13.0	-21.2	
5554.50	-3.9	H	3.0	35.5	1.0	-38.4	-13.0	-25.4	
7406.00	-8.7	H	3.0	35.7	1.0	-43.5	-13.0	-30.5	
Mid Ch, 1880									
3760.00	-2.7	V	3.0	35.8	1.0	-37.5	-13.0	-24.5	
5640.00	-8.0	V	3.0	35.5	1.0	-42.5	-13.0	-29.5	
7520.00	-14.5	V	3.0	35.7	1.0	-49.2	-13.0	-36.2	
3760.00	-2.6	H	3.0	35.8	1.0	-37.4	-13.0	-24.4	
5640.00	-6.9	H	3.0	35.5	1.0	-41.4	-13.0	-28.4	
7520.00	-10.5	H	3.0	35.7	1.0	-45.2	-13.0	-32.2	
High Ch, 1908.5									
3817.00	-1.6	V	3.0	35.8	1.0	-36.4	-13.0	-23.4	
5725.50	-7.8	V	3.0	35.5	1.0	-42.3	-13.0	-29.3	
7634.00	-12.5	V	3.0	35.8	1.0	-47.3	-13.0	-34.3	
3817.00	-9.4	H	3.0	35.8	1.0	-44.2	-13.0	-31.2	
5725.50	-7.5	H	3.0	35.5	1.0	-42.0	-13.0	-29.0	
7634.00	-10.6	H	3.0	35.8	1.0	-45.4	-13.0	-32.4	

UL VERIFICATION SERVICES INC. FORM NO: CCSUP4701I
47173 BENICIA STREET, FREMONT, CA 94538, USA TEL: (510) 771-1000 FAX: (510) 661-0888

This report shall not be reproduced except in full, without the written approval of UL Verification Services Inc.

UL Verification Services, Inc.
Above 1GHz High Frequency Substitution Measurement

Company: LG
Project #: 15I20243
Date: 3/13/2015
Test Engineer: R.Z
Configuration: EUT , AC Adapter and Headset
Location: Chamber G
Mode: LTE_16QAM Band 2 Harmonics, 1.4MHz Bandwidth

Band LTE2 1.4MHz 16QAM

f MHz	SG reading (dBm)	Ant. Pol. (H/V)	Distance (m)	Preamp (dB)	Filter (dB)	EIRP (dBm)	Limit (dBm)	Delta (dB)	Notes
Low Ch, 1850.7									
3701.40	-1.4	V	3.0	35.9	1.0	-36.2	-13.0	-23.2	
5552.10	-3.7	V	3.0	35.5	1.0	-38.2	-13.0	-25.2	
7402.80	-8.6	V	3.0	35.7	1.0	-43.3	-13.0	-30.3	
3701.40	-0.8	H	3.0	35.9	1.0	-35.7	-13.0	-22.7	
5552.10	-4.4	H	3.0	35.5	1.0	-38.9	-13.0	-25.9	
7402.80	-10.8	H	3.0	35.7	1.0	-45.6	-13.0	-32.6	
Mid Ch, 1880									
3760.00	0.8	V	3.0	35.8	1.0	-34.0	-13.0	-21.0	
5640.00	-6.7	V	3.0	35.5	1.0	-41.2	-13.0	-28.2	
7520.00	-13.8	V	3.0	35.7	1.0	-48.5	-13.0	-35.5	
3760.00	-2.2	H	3.0	35.8	1.0	-37.0	-13.0	-24.0	
5640.00	-9.6	H	3.0	35.5	1.0	-44.1	-13.0	-31.1	
7520.00	-11.9	H	3.0	35.7	1.0	-46.6	-13.0	-33.6	
High Ch, 1909.3									
3818.60	-3.1	V	3.0	35.8	1.0	-37.9	-13.0	-24.9	
5727.90	-8.0	V	3.0	35.5	1.0	-42.5	-13.0	-29.5	
7637.20	-10.8	V	3.0	35.8	1.0	-45.6	-13.0	-32.6	
3818.60	-9.3	H	3.0	35.8	1.0	-44.0	-13.0	-31.0	
5727.90	-10.0	H	3.0	35.5	1.0	-44.5	-13.0	-31.5	
7637.20	-11.9	H	3.0	35.8	1.0	-46.6	-13.0	-33.6	

UL VERIFICATION SERVICES INC. FORM NO: CCSUP4701I
47173 BENICIA STREET, FREMONT, CA 94538, USA TEL: (510) 771-1000 FAX: (510) 661-0888
This report shall not be reproduced except in full, without the written approval of UL Verification Services Inc.

UL Verification Services, Inc.
Above 1GHz High Frequency Substitution Measurement

Company: LG
Project #: 15I20243
Date: 3/13/2015
Test Engineer: R.Z
Configuration: EUT , AC Adapter and Headset
Location: Chamber G
Mode: LTE_QPSK Band 2 Harmonics, 1.4MHz Bandwidth

Band LTE2 1.4MHz QPSK

f MHz	SG reading (dBm)	Ant. Pol. (H/V)	Distance (m)	Preamp (dB)	Filter (dB)	EIRP (dBm)	Limit (dBm)	Delta (dB)	Notes
Low Ch, 1850.7									
3701.40	-1.6	V	3.0	35.9	1.0	-36.5	-13.0	-23.5	
5552.10	-4.5	V	3.0	35.5	1.0	-39.0	-13.0	-26.0	
7402.80	-8.1	V	3.0	35.7	1.0	-42.8	-13.0	-29.8	
3701.40	-4.2	H	3.0	35.9	1.0	-39.0	-13.0	-26.0	
5552.10	-4.4	H	3.0	35.5	1.0	-38.9	-13.0	-25.9	
7402.80	-9.8	H	3.0	35.7	1.0	-44.6	-13.0	-31.6	
Mid Ch, 1880									
3760.00	-5.3	V	3.0	35.8	1.0	-40.1	-13.0	-27.1	
5640.00	-8.5	V	3.0	35.5	1.0	-43.0	-13.0	-30.0	
7520.00	-13.2	V	3.0	35.7	1.0	-47.9	-13.0	-34.9	
3760.00	-5.4	H	3.0	35.8	1.0	-40.2	-13.0	-27.2	
5640.00	-6.7	H	3.0	35.5	1.0	-41.2	-13.0	-28.2	
7520.00	-12.2	H	3.0	35.7	1.0	-46.9	-13.0	-33.9	
High Ch, 1909.3									
3818.60	-7.2	V	3.0	35.8	1.0	-42.0	-13.0	-29.0	
5727.90	-8.4	V	3.0	35.5	1.0	-42.9	-13.0	-29.9	
7637.20	-11.6	V	3.0	35.8	1.0	-46.4	-13.0	-33.4	
3818.60	-8.5	H	3.0	35.8	1.0	-43.2	-13.0	-30.2	
5727.90	-6.8	H	3.0	35.5	1.0	-41.3	-13.0	-28.3	
7637.20	-11.8	H	3.0	35.8	1.0	-46.5	-13.0	-33.5	

UL VERIFICATION SERVICES INC. FORM NO: CCSUP4701I
47173 BENICIA STREET, FREMONT, CA 94538, USA TEL: (510) 771-1000 FAX: (510) 661-0888
This report shall not be reproduced except in full, without the written approval of UL Verification Services Inc.

WCDMA

UL Verification Services, Inc.
Above 1GHz High Frequency Substitution Measurement

Company: LG Electronics
Project #: 15I20243
Date: 3/13/2015
Test Engineer: J. Hsu
Configuration: EUT w/ AC Adapter + Headset
Location: Chamber A
Mode: HSDPA Band 2 Harmonics

Band

Band 2

HSDPA

f MHz	SG reading (dBm)	Ant. Pol. (H/V)	Distance (m)	Preamp (dB)	Filter (dB)	EIRP (dBm)	Limit (dBm)	Delta (dB)	Notes
Low Ch, 1852.4									
3704.80	-17.2	V	3.0	35.9	1.0	-52.0	-13.0	-39.0	
5557.20	-17.5	V	3.0	35.5	1.0	-52.0	-13.0	-39.0	
7409.60	-16.5	V	3.0	35.7	1.0	-51.2	-13.0	-38.2	
3704.80	-14.4	H	3.0	35.9	1.0	-49.3	-13.0	-36.3	
5557.20	-11.9	H	3.0	35.5	1.0	-46.4	-13.0	-33.4	
7409.60	-15.0	H	3.0	35.7	1.0	-49.8	-13.0	-36.8	
Mid Ch, 1880									
3760.00	-13.6	V	3.0	35.8	1.0	-48.4	-13.0	-35.4	
5640.00	-16.4	V	3.0	35.5	1.0	-50.8	-13.0	-37.8	
7520.00	-15.6	V	3.0	35.7	1.0	-50.3	-13.0	-37.3	
3760.00	-16.1	H	3.0	35.8	1.0	-51.0	-13.0	-38.0	
5640.00	-15.2	H	3.0	35.5	1.0	-49.6	-13.0	-36.6	
7520.00	-14.3	H	3.0	35.7	1.0	-49.1	-13.0	-36.1	
High Ch, 1907.6									
3815.20	-16.4	V	3.0	35.8	1.0	-51.2	-13.0	-38.2	
5722.80	-17.1	V	3.0	35.5	1.0	-51.6	-13.0	-38.6	
7630.40	-16.0	V	3.0	35.8	1.0	-50.8	-13.0	-37.8	
3815.20	-17.8	H	3.0	35.8	1.0	-52.6	-13.0	-39.6	
5722.80	-14.9	H	3.0	35.5	1.0	-49.4	-13.0	-36.4	
7630.40	-14.2	H	3.0	35.8	1.0	-48.9	-13.0	-35.9	

This report shall not be reproduced except in full, without the written approval of UL Verification Services Inc.

Band

Band 2

REL99

UL Verification Services, Inc.
Above 1GHz High Frequency Substitution Measurement

Company: LG Electronics
Project #: 15I20243
Date: 3/13/2015
Test Engineer: J. Hsu
Configuration: EUT w/ AC Adapter + Headset
Location: Chamber A
Mode: Rel99 Band 2 Harmonics

f MHz	SG reading (dBm)	Ant. Pol. (H/V)	Distance (m)	Preamp (dB)	Filter (dB)	EIRP (dBm)	Limit (dBm)	Delta (dB)	Notes
Low Ch, 1852.4									
3704.80	-13.5	V	3.0	35.9	1.0	-48.4	-13.0	-35.4	
5557.20	-16.1	V	3.0	35.5	1.0	-50.5	-13.0	-37.5	
7409.60	-16.4	V	3.0	35.7	1.0	-51.1	-13.0	-38.1	
3704.80	-16.9	H	3.0	35.9	1.0	-51.8	-13.0	-38.8	
5557.20	-12.6	H	3.0	35.5	1.0	-47.1	-13.0	-34.1	
7409.60	-14.8	H	3.0	35.7	1.0	-49.6	-13.0	-36.6	
Mid Ch, 1880									
3760.00	-12.5	V	3.0	35.8	1.0	-47.3	-13.0	-34.3	
5640.00	-16.4	V	3.0	35.5	1.0	-50.9	-13.0	-37.9	
7520.00	-15.8	V	3.0	35.7	1.0	-50.6	-13.0	-37.6	
3760.00	-17.8	H	3.0	35.8	1.0	-52.6	-13.0	-39.6	
5640.00	-16.6	H	3.0	35.5	1.0	-51.0	-13.0	-38.0	
7520.00	-14.7	H	3.0	35.7	1.0	-49.4	-13.0	-36.4	
High Ch, 1907.6									
3815.20	-14.0	V	3.0	35.8	1.0	-48.8	-13.0	-35.8	
5722.80	-16.3	V	3.0	35.5	1.0	-50.8	-13.0	-37.8	
7630.40	-15.6	V	3.0	35.8	1.0	-50.3	-13.0	-37.3	
3815.20	-19.0	H	3.0	35.8	1.0	-53.8	-13.0	-40.8	
5722.80	-14.3	H	3.0	35.5	1.0	-48.8	-13.0	-35.8	
7630.40	-13.0	H	3.0	35.8	1.0	-47.8	-13.0	-34.8	

This report shall not be reproduced except in full, without the written approval of UL Verification Services Inc.

Band

Band 4

HSDPA

UL Verification Services, Inc.
Above 1GHz High Frequency Substitution Measurement

Company: LG Electronics
Project #: 15I20243
Date: 3/13/2015
Test Engineer: J. Hsu
Configuration: EUT w/ AC Adapter + Headset
Location: Chamber A
Mode: HSDPA Band 4 Harmonics

f MHz	SG reading (dBm)	Ant. Pol. (H/V)	Distance (m)	Preamp (dB)	Filter (dB)	EIRP (dBm)	Limit (dBm)	Delta (dB)	Notes
Low Ch, 1712.4									
3424.80	-11.4	V	3.0	35.9	1.0	-46.3	-13.0	-33.3	
5137.20	-10.8	V	3.0	35.5	1.0	-45.3	-13.0	-32.3	
6849.60	-15.6	V	3.0	35.7	1.0	-50.3	-13.0	-37.3	
3424.80	-2.5	H	3.0	35.9	1.0	-37.3	-13.0	-24.3	
5137.20	-13.6	H	3.0	35.5	1.0	-48.1	-13.0	-35.1	
6849.60	-16.5	H	3.0	35.7	1.0	-51.3	-13.0	-38.3	
Mid Ch, 1732.6									
3465.20	-7.0	V	3.0	35.8	1.0	-41.8	-13.0	-28.8	
5197.80	-14.6	V	3.0	35.5	1.0	-49.1	-13.0	-36.1	
6930.04	-16.0	V	3.0	35.7	1.0	-50.8	-13.0	-37.8	
3465.20	-2.3	H	3.0	35.8	1.0	-37.1	-13.0	-24.1	
5197.80	-13.4	H	3.0	35.5	1.0	-47.9	-13.0	-34.9	
6930.04	-15.3	H	3.0	35.7	1.0	-50.1	-13.0	-37.1	
High Ch, 1752.6									
3505.20	-6.3	V	3.0	35.8	1.0	-41.1	-13.0	-28.1	
5257.80	-16.6	V	3.0	35.5	1.0	-51.1	-13.0	-38.1	
7010.40	-15.9	V	3.0	35.8	1.0	-50.6	-13.0	-37.6	
3505.20	-4.7	H	3.0	35.8	1.0	-39.5	-13.0	-26.5	
5257.80	-11.6	H	3.0	35.5	1.0	-46.1	-13.0	-33.1	
7010.40	-14.8	H	3.0	35.8	1.0	-49.6	-13.0	-36.6	

UL VERIFICATION SERVICES INC. FORM NO: CCSUP4701I
47173 BENICIA STREET, FREMONT, CA 94538, USA TEL: (510) 771-1000 FAX: (510) 661-0888

This report shall not be reproduced except in full, without the written approval of UL Verification Services Inc.

Band

Band 4

REL99

UL Verification Services, Inc.
Above 1GHz High Frequency Substitution Measurement

Company: LG Electronics
Project #: 15I20243
Date: 3/13/2015
Test Engineer: J. Hsu
Configuration: EUT w/ AC Adapter + Headset
Location: Chamber A
Mode: Rel99 Band 4 Harmonics

f MHz	SG reading (dBm)	Ant. Pol. (H/V)	Distance (m)	Preamp (dB)	Filter (dB)	EIRP (dBm)	Limit (dBm)	Delta (dB)	Notes
Low Ch, 1712.4									
3424.80	0.0	V	3.0	35.9	1.0	-34.9	-13.0	-21.9	
5137.20	0.0	V	3.0	35.5	1.0	-34.5	-13.0	-21.5	
6849.60	0.0	V	3.0	35.7	1.0	-34.7	-13.0	-21.7	
3424.80	0.0	H	3.0	35.9	1.0	-34.9	-13.0	-21.9	
5137.20	0.0	H	3.0	35.5	1.0	-34.5	-13.0	-21.5	
6849.60	0.0	H	3.0	35.7	1.0	-34.7	-13.0	-21.7	
Mid Ch, 1732.6									
3465.20	0.0	V	3.0	35.8	1.0	-34.8	-13.0	-21.8	
5197.80	0.0	V	3.0	35.5	1.0	-34.5	-13.0	-21.5	
6930.04	0.0	V	3.0	35.7	1.0	-34.7	-13.0	-21.7	
3465.20	0.0	H	3.0	35.8	1.0	-34.8	-13.0	-21.8	
5197.80	0.0	H	3.0	35.5	1.0	-34.5	-13.0	-21.5	
6930.04	0.0	H	3.0	35.7	1.0	-34.7	-13.0	-21.7	
High Ch, 1752.6									
3505.20	0.0	V	3.0	35.8	1.0	-34.8	-13.0	-21.8	
5257.80	0.0	V	3.0	35.5	1.0	-34.5	-13.0	-21.5	
7010.40	0.0	V	3.0	35.8	1.0	-34.8	-13.0	-21.8	
3505.20	0.0	H	3.0	35.8	1.0	-34.8	-13.0	-21.8	
5257.80	0.0	H	3.0	35.5	1.0	-34.5	-13.0	-21.5	
7010.40	0.0	H	3.0	35.8	1.0	-34.8	-13.0	-21.8	

This report shall not be reproduced except in full, without the written approval of UL Verification Services Inc.

Band

Band 5

HSDPA

UL Verification Services, Inc.
Above 1GHz High Frequency Substitution Measurement

Company: LG Electronics
Project #: 15I20243
Date: 3/13/2015
Test Engineer: J. Hsu
Configuration: EUT w/ AC Adapter + Headset
Location: Chamber A
Mode: HSDPA Band 5 Harmonics

f MHz	SG reading (dBm)	Ant. Pol. (H/V)	Distance (m)	Preamp (dB)	Filter (dB)	EIRP (dBm)	Limit (dBm)	Delta (dB)	Notes
Low Ch, 826.4									
1652.80	-3.0	V	3.0	37.0	1.0	-39.1	-13.0	-26.1	
2479.20	-22.6	V	3.0	36.4	1.0	-58.0	-13.0	-45.0	
3305.60	-23.0	V	3.0	36.1	1.0	-58.2	-13.0	-45.2	
1652.80	-14.4	H	3.0	37.0	1.0	-50.5	-13.0	-37.5	
2479.20	-26.4	H	3.0	36.4	1.0	-61.8	-13.0	-48.8	
3305.60	-22.6	H	3.0	36.1	1.0	-57.7	-13.0	-44.7	
Mid Ch, 836.6									
1673.20	-2.3	V	3.0	37.0	1.0	-38.3	-13.0	-25.3	
2509.80	-23.6	V	3.0	36.4	1.0	-59.0	-13.0	-46.0	
3346.40	-22.9	V	3.0	36.1	1.0	-58.1	-13.0	-45.1	
1673.20	-8.5	H	3.0	37.0	1.0	-44.5	-13.0	-31.5	
2509.80	-24.8	H	3.0	36.4	1.0	-60.2	-13.0	-47.2	
3346.40	-22.1	H	3.0	36.1	1.0	-57.3	-13.0	-44.3	
High Ch, 846.6									
1693.20	-2.7	V	3.0	37.0	1.0	-38.6	-13.0	-25.6	
2539.80	-23.2	V	3.0	36.4	1.0	-58.6	-13.0	-45.6	
3386.40	-22.3	V	3.0	36.1	1.0	-57.4	-13.0	-44.4	
1693.20	-6.8	H	3.0	37.0	1.0	-42.8	-13.0	-29.8	
2539.80	-22.9	H	3.0	36.4	1.0	-58.3	-13.0	-45.3	
3386.40	-22.0	H	3.0	36.1	1.0	-57.1	-13.0	-44.1	

This report shall not be reproduced except in full, without the written approval of UL Verification Services Inc.

Band

Band 5

REL99

UL Verification Services, Inc.
Above 1GHz High Frequency Substitution Measurement

Company: LG Electronics
Project #: 15I20243
Date: 3/13/2015
Test Engineer: J. Hsu
Configuration: EUT w/ AC Adapter + Headset
Location: Chamber A
Mode: Rel99 Band 5 Harmonics

f MHz	SG reading (dBm)	Ant. Pol. (H/V)	Distance (m)	Preamp (dB)	Filter (dB)	EIRP (dBm)	Limit (dBm)	Delta (dB)	Notes
Low Ch, 826.4									
1652.80	-7.0	V	3.0	37.0	1.0	-43.0	-13.0	-30.0	
2479.20	-23.4	V	3.0	36.4	1.0	-58.8	-13.0	-45.8	
3305.60	-22.7	V	3.0	36.1	1.0	-57.9	-13.0	-44.9	
1652.80	-8.1	H	3.0	37.0	1.0	-44.1	-13.0	-31.1	
2479.20	-25.5	H	3.0	36.4	1.0	-61.0	-13.0	-48.0	
3305.60	-20.5	H	3.0	36.1	1.0	-55.7	-13.0	-42.7	
Mid Ch, 836.6									
1673.20	-1.8	V	3.0	37.0	1.0	-37.8	-13.0	-24.8	
2509.80	-23.4	V	3.0	36.4	1.0	-58.8	-13.0	-45.8	
3346.40	-22.9	V	3.0	36.1	1.0	-58.1	-13.0	-45.1	
1673.20	-10.9	H	3.0	37.0	1.0	-46.9	-13.0	-33.9	
2509.80	-24.3	H	3.0	36.4	1.0	-59.7	-13.0	-46.7	
3346.40	-21.4	H	3.0	36.1	1.0	-56.5	-13.0	-43.5	
High Ch, 846.6									
1693.20	-2.6	V	3.0	37.0	1.0	-38.6	-13.0	-25.6	
2539.80	-23.6	V	3.0	36.4	1.0	-59.0	-13.0	-46.0	
3386.40	-21.4	V	3.0	36.1	1.0	-56.5	-13.0	-43.5	
1693.20	-11.0	H	3.0	37.0	1.0	-47.0	-13.0	-34.0	
2539.80	-21.7	H	3.0	36.4	1.0	-57.1	-13.0	-44.1	
3386.40	-21.9	H	3.0	36.1	1.0	-57.0	-13.0	-44.0	

This report shall not be reproduced except in full, without the written approval of UL Verification Services Inc.

GSM

UL Verification Services, Inc.
Above 1GHz High Frequency Substitution Measurement

Company: LG Electronics
Project #: 15I20243
Date: 3/13/2015
Test Engineer: J. Hsu
Configuration: EUT w/ AC Adapter + Headset
Location: Chamber A
Mode: EGPRS 1900 MHz Harmonics

Band

GSM 1900

EGPRS

f MHz	SG reading (dBm)	Ant. Pol. (H/V)	Distance (m)	Preamp (dB)	Filter (dB)	EIRP (dBm)	Limit (dBm)	Delta (dB)	Notes
Low Ch, 1850.2									
3700.40	-18.3	V	3.0	35.9	1.0	-53.1	-13.0	-40.1	
5550.60	-9.5	V	3.0	35.5	1.0	-44.0	-13.0	-31.0	
7400.80	-13.9	V	3.0	35.7	1.0	-48.6	-13.0	-35.6	
3700.40	-17.3	H	3.0	35.9	1.0	-52.2	-13.0	-39.2	
5550.60	-13.3	H	3.0	35.5	1.0	-47.7	-13.0	-34.7	
7400.80	-14.3	H	3.0	35.7	1.0	-49.0	-13.0	-36.0	
Mid Ch, 1880									
3760.00	-17.9	V	3.0	35.8	1.0	-52.8	-13.0	-39.8	
5640.00	-11.7	V	3.0	35.5	1.0	-46.2	-13.0	-33.2	
7520.00	-10.3	V	3.0	35.7	1.0	-45.0	-13.0	-32.0	
3760.00	-17.8	H	3.0	35.8	1.0	-52.6	-13.0	-39.6	
5640.00	-15.3	H	3.0	35.5	1.0	-49.8	-13.0	-36.8	
7520.00	-11.8	H	3.0	35.7	1.0	-46.5	-13.0	-33.5	
High Ch, 1909.8									
3819.60	-17.4	V	3.0	35.8	1.0	-52.2	-13.0	-39.2	
5729.40	-15.8	V	3.0	35.5	1.0	-50.3	-13.0	-37.3	
7639.20	-13.9	V	3.0	35.8	1.0	-48.6	-13.0	-35.6	
3819.60	-17.4	H	3.0	35.8	1.0	-52.1	-13.0	-39.1	
5729.40	-14.0	H	3.0	35.5	1.0	-48.5	-13.0	-35.5	
7639.20	-12.9	H	3.0	35.8	1.0	-47.7	-13.0	-34.7	

This report shall not be reproduced except in full, without the written approval of UL Verification Services Inc.

UL Verification Services, Inc.
Above 1GHz High Frequency Substitution Measurement

Company: LG Electronics
Project #: 15I20243
Date: 3/13/2015
Test Engineer: J. Hsu
Configuration: EUT w/ AC Adapter + Headset
Location: Chamber A
Mode: GPRS 1900 MHz Harmonics

Band

GSM 1900

GPRS

f MHz	SG reading (dBm)	Ant. Pol. (H/V)	Distance (m)	Preamp (dB)	Filter (dB)	EIRP (dBm)	Limit (dBm)	Delta (dB)	Notes
Low Ch, 1850.2									
3700.40	-17.1	V	3.0	35.9	1.0	-51.9	-13.0	-38.9	
5550.60	-9.5	V	3.0	35.5	1.0	-44.0	-13.0	-31.0	
7400.80	-12.0	V	3.0	35.7	1.0	-46.7	-13.0	-33.7	
3700.40	-13.3	H	3.0	35.9	1.0	-48.2	-13.0	-35.2	
5550.60	-9.2	H	3.0	35.5	1.0	-43.6	-13.0	-30.6	
7400.80	-13.2	H	3.0	35.7	1.0	-47.9	-13.0	-34.9	
Mid Ch, 1880									
3760.00	-17.8	V	3.0	35.8	1.0	-52.6	-13.0	-39.6	
5640.00	-11.5	V	3.0	35.5	1.0	-46.0	-13.0	-33.0	
7520.00	-14.3	V	3.0	35.7	1.0	-49.1	-13.0	-36.1	
3760.00	-14.1	H	3.0	35.8	1.0	-48.9	-13.0	-35.9	
5640.00	-15.7	H	3.0	35.5	1.0	-50.2	-13.0	-37.2	
7520.00	-12.2	H	3.0	35.7	1.0	-46.9	-13.0	-33.9	
High Ch, 1909.8									
3819.60	-15.4	V	3.0	35.8	1.0	-50.1	-13.0	-37.1	
5729.40	-13.3	V	3.0	35.5	1.0	-47.8	-13.0	-34.8	
7639.20	-13.7	V	3.0	35.8	1.0	-48.5	-13.0	-35.5	
3819.60	-15.0	H	3.0	35.8	1.0	-49.7	-13.0	-36.7	
5729.40	-15.3	H	3.0	35.5	1.0	-49.8	-13.0	-36.8	
7639.20	-13.7	H	3.0	35.8	1.0	-48.5	-13.0	-35.5	

UL VERIFICATION SERVICES INC. FORM NO: CCSUP4701I
47173 BENICIA STREET, FREMONT, CA 94538, USA TEL: (510) 771-1000 FAX: (510) 661-0888

This report shall not be reproduced except in full, without the written approval of UL Verification Services Inc.

UL Verification Services, Inc.
Above 1GHz High Frequency Substitution Measurement

Company: LG Electronics
Project #: 15I20243
Date: 3/13/2015
Test Engineer: J. Hsu
Configuration: EUT w/ AC Adapter + Headset
Location: Chamber A
Mode: EGPRS 850 MHz Harmonics

Band

GSM 850

EGPRS

f MHz	SG reading (dBm)	Ant. Pol. (H/V)	Distance (m)	Preamp (dB)	Filter (dB)	EIRP (dBm)	Limit (dBm)	Delta (dB)	Notes
Low Ch, 824.2									
1648.40	-19.4	V	3.0	37.0	1.0	-55.5	-13.0	-42.5	
2472.60	-23.9	V	3.0	36.4	1.0	-59.4	-13.0	-46.4	
3296.80	-22.6	V	3.0	36.2	1.0	-57.7	-13.0	-44.7	
1648.40	-22.8	H	3.0	37.0	1.0	-58.8	-13.0	-45.8	
2472.60	-24.9	H	3.0	36.4	1.0	-60.4	-13.0	-47.4	
3296.80	-22.9	H	3.0	36.2	1.0	-58.1	-13.0	-45.1	
Mid Ch, 836.6									
1673.20	-17.9	V	3.0	37.0	1.0	-53.9	-13.0	-40.9	
2509.80	-23.9	V	3.0	36.4	1.0	-59.3	-13.0	-46.3	
3346.40	-21.7	V	3.0	36.1	1.0	-56.8	-13.0	-43.8	
1673.20	-20.2	H	3.0	37.0	1.0	-56.2	-13.0	-43.2	
2509.80	-25.5	H	3.0	36.4	1.0	-60.9	-13.0	-47.9	
3346.40	-22.2	H	3.0	36.1	1.0	-57.3	-13.0	-44.3	
High Ch, 848.8									
1697.60	-17.1	V	3.0	37.0	1.0	-53.1	-13.0	-40.1	
2546.40	-24.2	V	3.0	36.4	1.0	-59.6	-13.0	-46.6	
3395.20	-22.2	V	3.0	36.1	1.0	-57.3	-13.0	-44.3	
1697.60	-20.6	H	3.0	37.0	1.0	-56.5	-13.0	-43.5	
2546.40	-26.0	H	3.0	36.4	1.0	-61.4	-13.0	-48.4	
3395.20	-22.4	H	3.0	36.1	1.0	-57.5	-13.0	-44.5	

UL VERIFICATION SERVICES INC. FORM NO: CCSUP4701I
47173 BENICIA STREET, FREMONT, CA 94538, USA TEL: (510) 771-1000 FAX: (510) 661-0888

This report shall not be reproduced except in full, without the written approval of UL Verification Services Inc.

UL Verification Services, Inc.
Above 1GHz High Frequency Substitution Measurement

Company: LG Electronics
Project #: 15I20243
Date: 3/13/2015
Test Engineer: J. Hsu
Configuration: EUT w/ AC Adapter + Headset
Location: Chamber A
Mode: GPRS 850 MHz Harmonics

Band

GSM 850

GPRS

f MHz	SG reading (dBm)	Ant. Pol. (H/V)	Distance (m)	Preamp (dB)	Filter (dB)	EIRP (dBm)	Limit (dBm)	Delta (dB)	Notes
Low Ch, 824.2									
1648.40	10.5	V	3.0	37.0	1.0	-25.5	-13.0	-12.5	
2472.60	-7.9	V	3.0	36.4	1.0	-43.3	-13.0	-30.3	
3296.80	-19.1	V	3.0	36.2	1.0	-54.3	-13.0	-41.3	
1648.40	-5.0	H	3.0	37.0	1.0	-41.1	-13.0	-28.1	
2472.60	-18.7	H	3.0	36.4	1.0	-54.2	-13.0	-41.2	
3296.80	-21.4	H	3.0	36.2	1.0	-56.6	-13.0	-43.6	
Mid Ch, 836.6									
1673.20	13.4	V	3.0	37.0	1.0	-22.6	-13.0	-9.6	
2509.80	-6.7	V	3.0	36.4	1.0	-42.1	-13.0	-29.1	
3346.40	-16.2	V	3.0	36.1	1.0	-51.3	-13.0	-38.3	
1673.20	-8.3	H	3.0	37.0	1.0	-44.3	-13.0	-31.3	
2509.80	-15.3	H	3.0	36.4	1.0	-50.8	-13.0	-37.8	
3346.40	-22.3	H	3.0	36.1	1.0	-57.5	-13.0	-44.5	
High Ch, 848.8									
1697.60	12.8	V	3.0	37.0	1.0	-23.2	-13.0	-10.2	
2546.40	-14.6	V	3.0	36.4	1.0	-50.0	-13.0	-37.0	
3395.20	-16.6	V	3.0	36.1	1.0	-51.7	-13.0	-38.7	
1697.60	-7.0	H	3.0	37.0	1.0	-43.0	-13.0	-30.0	
2546.40	-13.6	H	3.0	36.4	1.0	-49.0	-13.0	-36.0	
3395.20	-22.2	H	3.0	36.1	1.0	-57.3	-13.0	-44.3	

UL VERIFICATION SERVICES INC. FORM NO: CCSUP4701I
47173 BENICIA STREET, FREMONT, CA 94538, USA TEL: (510) 771-1000 FAX: (510) 661-0888

This report shall not be reproduced except in full, without the written approval of UL Verification Services Inc.