TEST REPORT

Dt&C

DT&C Co., Ltd.

42, Yurim-ro, 154Beon-gil, Cheoin-gu, Yongin-si, Gyeonggi-do, Korea, 17042
Tel : 031-321-2664, Fax : 031-321-1664

1. Report No : DRTFCC1708-0137(1)
2. Customer
   - Name : LG Electronics MobileComm USA, Inc.
   - Address : 1000 Sylvan Ave., Englewood Cliffs, New Jersey, United States, 07632
3. Use of Report : FCC Original Grant
4. Product Name / Model Name : Mobile Phone / LG-H930
   FCC ID : ZNFH930
5. Test Method Used : KDB971168 D01v02r02, ANSI/TIA-603-E-2016
   Test Specification : §2, §22(H), §27
6. Date of Test : 2017.06.26 ~ 2017.07.20
7. Testing Environment : Refer to appended test report.
8. Test Result : Refer to the attached test result.

Affirmation	Tested by Name : Jaejin Lee (Signature)	Technical Manager Name : Geunki Son (Signature)

The test results presented in this test report are limited only to the sample supplied by applicant and the use of this test report is inhibited other than its purpose. This test report shall not be reproduced except in full, without the written approval of DT&C Co., Ltd.

2017 . 08 . 09 .

DT&C Co., Ltd.

If this report is required to confirmation of authenticity, please contact to report@dtnc.net

Test Report Version

Test Report No.	Date	Description
DRTFCC1708-0137	Aug. 03, 2017	Initial issue
DRTFCC1708-0137(1)	Aug. 09, 2017	5 page typo correction.

Table of Contents

1. GENERAL INFORMATION 5
2. INTRODUCTION 7
2.1 EUT DESCRIPTION 7
2.2. EUT CAPABILITIES 7
2.3. TESTING ENVIRONMENT 7
2.4 MEASURING INSTRUMENT CALIBRATION 7
2.5. MEASUREMENT UNCERTAINTY 7
2.6. TEST FACILITY 7
3. DESCRIPTION OF TESTS 8
3.1 ERP & EIRP (Effective Radiated Power & Equivalent Isotropic Radiated Power) 8
3.2 PEAK TO AVERAGE RATIO 10
3.3 OCCUPIED BANDWIDTH. 11
3.4 BAND EDGE EMISSIONS AT ANTENNA TERMINAL 12
3.5 SPURIOUS AND HARMONIC EMISSIONS AT ANTENNA TERMINAL 13
3.6 UNDESIRABLE EMISSIONS 14
3.7 FREQUENCY STABILITY 15
4. LIST OF TEST EQUIPMENT 16
5. SUMMARY OF TEST RESULTS 17
6. SAMPLE CALCULATION 18
7. TEST DATA 21
7.1 OCCUPIED BANDWIDTH 21
7.2 PEAK TO AVERAGE RATIO 21
7.3 BAND EDEG EMISSIONS (Conducted) 21
7.4 SPURIOUS AND HARMONICS EMISSIONS (Conducted) 21
7.5 ERP & EIRP 22
7.5.1 LTE Band 12 22
7.5.2 LTE Band 17 24
7.5.3 LTE Band 5 25
7.5.4 LTE Band 4 27
7.5.5 LTE Band 41 30
7.5.6 LTE Band 7 32
7.6 UNDESIRABLE EMISSIONS (Radiated) 34
7.6.1 LTE Band 12 34
7.6.2 LTE Band 17 37
7.6.3 LTE Band 5 39
7.6.4 LTE Band 4 42
7.6.5 LTE Band 41 46
7.6.6 LTE Band 7 49
7.7 FREQUENCY STABILITY 52

7.7.1 LTE Band 12 52
7.7.2 LTE Band 17 53
7.7.3 LTE Band 5 54
7.7.4 LTE Band 4 55
7.7.5 LTE Band 41 56
7.7.6 LTE Band 7 57
8. TEST PLOTS 58
8.1 OCCUPIED BANDWIDTH 58
8.1.1 LTE Band 12 58
8.1.2 LTE Band 17 66
8.1.3 LTE Band 5 70
8.1.4 LTE Band 4 78
8.1.5 LTE Band 41 90
8.1.6 LTE Band 7 98
8.2 PEAK TO AVERAGE RATIO 106
8.2.1 LTE Band 12 106
8.2.2 LTE Band 17 114
8.2.3 LTE Band 5 118
8.2.4 LTE Band 4 126
8.2.5 LTE Band 41 138
8.2.6 LTE Band 7 146
8.3 BAND EDGE EMISSIONS(Conducted) 154
8.3.1 LTE Band 12 154
8.3.2 LTE Band 17 162
8.3.3 LTE Band 5 166
8.3.4 LTE Band 4 174
8.3.5 LTE Band 41 186
8.3.6 LTE Band 7 192
8.4 SPURIOUS AND HARMONICS EMISSIONS(Conducted) 198
8.4.1 LTE Band 12 198
8.4.2 LTE Band 17 204
8.4.3 LTE Band 5 207
8.4.4 LTE Band 4 213
8.4.5 LTE Band 41 231
8.4.6 LTE Band 7 243

1. GENERAL INFORMATION

Applicant Name : LG Electronics MobileComm USA, Inc.

Address : 1000 Sylvan Ave., Englewood Cliffs, New Jersey, United States, 07632

FCC ID : ZNFH930

FCC Classification : Licensed Portable Transmitter Held to Ear (PCE)

EUT Type : Mobile Phone

Model Name : LG-H930

Add Model Name : LG-H930DS, LG-H930K, LG-H930G

Supplying power : DC 3.85 V

Antenna Information : Built-in type

Mode	TX Frequency (MHz)	Emission Designator	Modulation	ERP	
				Max power (dBm)	Max power (W)
LTE Band 12	704 ~ 711	**8M95G7D**	QPSK	21.14	**0.130**
LTE Band 12	704 ~ 711	**8M96W7D**	16QAM	20.69	0.117
LTE Band 12	704 ~ 711	8M94W7D	64QAM	21.68	**0.147**
LTE Band 12	701.5 ~ 713.5	**4M48G7D**	QPSK	21.60	**0.145**
LTE Band 12	701.5 ~ 713.5	**4M49W7D**	16QAM	20.90	**0.123**
LTE Band 12	701.5 ~ 713.5	4M48W7D	64QAM	20.86	0.122
LTE Band 12	700.5 ~ 714.5	**2M69G7D**	QPSK	21.66	**0.147**
LTE Band 12	700.5 ~ 714.5	2M69W7D	16QAM	20.81	**0.121**
LTE Band 12	700.5 ~ 714.5	**2M70W7D**	64QAM	20.84	0.121
LTE Band 12	699.7 ~ 715.3	**1M09G7D**	QPSK	21.43	**0.139**
LTE Band 12	699.7 ~ 715.3	**1M09W7D**	16QAM	20.66	**0.116**
LTE Band 12	699.7 ~ 715.3	1M09W7D	64QAM	20.58	0.114
LTE Band 17	709 ~ 711	**8M95G7D**	QPSK	21.62	**0.145**
LTE Band 17	709 ~ 711	8M95W7D	16QAM	20.74	0.119
LTE Band 17	709 ~ 711	**8M96W7D**	64QAM	21.14	**0.130**
LTE Band 17	706.5 ~ 713.5	**4M48G7D**	QPSK	21.55	**0.143**
LTE Band 17	706.5 ~ 713.5	**4M50W7D**	16QAM	20.78	**0.120**
LTE Band 17	706.5 ~ 713.5	4M48W7D	64QAM	20.78	0.120
LTE Band 5	829 ~ 844	**8M96G7D**	QPSK	23.96	**0.249**
LTE Band 5	829 ~ 844	**8M95W7D**	16QAM	23.26	**0.212**
LTE Band 5	829 ~ 844	8M95W7D	64QAM	23.25	0.211
LTE Band 5	826.5 ~ 846.5	**4M49G7D**	QPSK	23.65	**0.232**
LTE Band 5	826.5 ~ 846.5	4M49W7D	16QAM	22.84	**0.192**
LTE Band 5	826.5 ~ 846.5	**4M50W7D**	64QAM	22.59	0.182
LTE Band 5	825.5 ~ 847.5	**2M70G7D**	QPSK	23.37	**0.217**
LTE Band 5	825.5 ~ 847.5	**2M70W7D**	16QAM	22.85	**0.193**
LTE Band 5	825.5 ~ 847.5	2M70W7D	64QAM	22.73	0.187
LTE Band 5	824.7 ~ 848.3	**1M09G7D**	QPSK	23.24	**0.211**
LTE Band 5	824.7 ~ 848.3	**1M09W7D**	16QAM	22.68	**0.185**
LTE Band 5	824.7 ~ 848.3	1M09W7D	64QAM	22.55	0.180

Mode	TX Frequency (MHz)	Emission Designator	Modulation	EIRP	
				Max power(dBm)	Max power(W)
LTE Band 4	1720 ~ 1745	**17M9G7D**	QPSK	21.34	**0.136**
LTE Band 4	1720 ~ 1745	**17M9W7D**	16QAM	20.42	**0.110**
LTE Band 4	1720 ~ 1745	17M9W7D	64QAM	20.32	0.108
LTE Band 4	1717.5 ~ 1747.5	**13M4G7D**	QPSK	21.65	**0.146**
LTE Band 4	1717.5 ~ 1747.5	**13M5W7D**	16QAM	20.90	**0.123**
LTE Band 4	1717.5 ~ 1747.5	13M4W7D	64QAM	20.87	0.122
LTE Band 4	1715 ~ 1750	**8M94G7D**	QPSK	20.82	**0.121**
LTE Band 4	1715 ~ 1750	**8M96W7D**	16QAM	20.26	**0.106**
LTE Band 4	1715 ~ 1750	8M96W7D	64QAM	20.09	0.102
LTE Band 4	1712.5 ~ 1752.5	**4M48G7D**	QPSK	21.26	**0.134**
LTE Band 4	1712.5 ~ 1752.5	4M49W7D	16QAM	20.33	**0.108**
LTE Band 4	1712.5 ~ 1752.5	**4M50W7D**	64QAM	20.21	0.105
LTE Band 4	1711.5 ~ 1753.5	**2M70G7D**	QPSK	21.08	**0.128**
LTE Band 4	1711.5 ~ 1753.5	2M69W7D	16QAM	20.45	**0.111**
LTE Band 4	1711.5 ~ 1753.5	**2M70W7D**	64QAM	20.23	0.105
LTE Band 4	1710.7 ~ 1754.3	**1M09G7D**	QPSK	21.15	**0.130**
LTE Band 4	1710.7 ~ 1754.3	**1M09W7D**	16QAM	20.22	**0.105**
LTE Band 4	1710.7 ~ 1754.3	1M09W7D	64QAM	20.13	0.103
LTE Band 41	2506 ~ 2680	**17M8G7D**	QPSK	21.35	**0.136**
LTE Band 41	2506 ~ 2680	**17M9W7D**	16QAM	20.71	0.118
LTE Band 41	2506 ~ 2680	17M8W7D	64QAM	20.84	**0.121**
LTE Band 41	2503.5 ~ 2682.5	**13M4G7D**	QPSK	21.17	**0.131**
LTE Band 41	2503.5 ~ 2682.5	**13M5W7D**	16QAM	20.72	**0.118**
LTE Band 41	2503.5 ~ 2682.5	13M4W7D	64QAM	20.35	0.108
LTE Band 41	2501 ~ 2685	**8M96G7D**	QPSK	21.30	**0.135**
LTE Band 41	2501 ~ 2685	**8M98W7D**	16QAM	20.57	**0.114**
LTE Band 41	2501 ~ 2685	8M94W7D	64QAM	20.05	0.101
LTE Band 41	2498.5 ~ 2687.5	**4M48G7D**	QPSK	21.53	**0.142**
LTE Band 41	2498.5 ~ 2687.5	**4M48W7D**	16QAM	21.08	**0.128**
LTE Band 41	2498.5 ~ 2687.5	4M48W7D	64QAM	20.76	0.119
LTE Band 7	2510 ~ 2560	**17M9G7D**	QPSK	21.16	**0.131**
LTE Band 7	2510 ~ 2560	**17M9W7D**	16QAM	20.70	**0.117**
LTE Band 7	2510 ~ 2560	17M9W7D	64QAM	20.62	0.115
LTE Band 7	2507.5 ~ 2562.5	**13M4G7D**	QPSK	20.89	**0.123**
LTE Band 7	2507.5 ~ 2562.5	**13M4W7D**	16QAM	20.65	**0.116**
LTE Band 7	2507.5 ~ 2562.5	13M4W7D	64QAM	20.54	0.113
LTE Band 7	2505 ~ 2565	**8M99G7D**	QPSK	21.61	**0.145**
LTE Band 7	2505 ~ 2565	8M95W7D	16QAM	20.80	**0.120**
LTE Band 7	2505 ~ 2565	**8M96W7D**	64QAM	20.76	0.119
LTE Band 7	2502.5 ~ 2567.5	**4M48G7D**	QPSK	21.28	**0.134**
LTE Band 7	2502.5 ~ 2567.5	**4M49W7D**	16QAM	20.43	**0.110**
LTE Band 7	2502.5 ~ 2567.5	4M49W7D	64QAM	20.38	0.109

2. INTRODUCTION

2.1 EUT DESCRIPTION

The Equipment under Test (EUT) supports WCDMA, LTE, WLAN, Bluetooth and NFC.

2.2. EUT CAPABILITIES

This ETU contains the following capabilities:
850/1900 GSM/GPRS/EDGE, 850/1900 WCDMA/HSUPA, Multi-band LTE, 802.11b/g/n/ac WLAN(2.4GHz), 802.11a/n/ac WLAN(5GHz), Bluetooth(BDR, EDR, LE), NFC

2.3. TESTING ENVIRONMENT

Ambient Condition	
▪ Temperature	+20 ℃ ~ +24 ℃
▪ Relative Humidity	41 % ~ 46 %

2.4 MEASURING INSTRUMENT CALIBRATION

The measuring equipment, which was utilized in performing the tests documented herein, has been calibrated in accordance with the manufacturer's recommendations for utilizing calibration equipment, which is traceable to recognized national standards.

2.5. MEASUREMENT UNCERTAINTY

The measurement uncertainties shown below were calculated in accordance with requirements of ANSI C 63.4-2014. All measurement uncertainty values are shown with a coverage factor of *k* = 2 to indicate a 95 % level of confidence.

Parameter	Measurement uncertainty
Radiated Disturbance (Below 1 GHz)	± 5.1 dB (The confidence level is about 95 %, k = 2)
Radiated Disturbance (1 GHz ~ 18 GHz)	± 5.4 dB (The confidence level is about 95 %, k = 2)
Radiated Disturbance (Above 18 GHz)	± 5.3 dB (The confidence level is about 95 %, k = 2)

2.6. TEST FACILITY

DT&C Co., Ltd.		
The 3 m test site and conducted measurement facility used to collect the radiated data are located at the 42, Yurim-ro, 154beon-gil, Cheoin-gu, Yongin-si, Gyeonggi-do, Korea 17042. The site is constructed in conformance with the requirements. **- FCC MRA Accredited Test Firm No. : KR0034**		
www.dtnc.net		
Telephone	:	+ 82-31-321-2664
FAX	:	+ 82-31-321-1664

3. DESCRIPTION OF TESTS

3.1 ERP & EIRP (Effective Radiated Power & Equivalent Isotropic Radiated Power)

Test Set-up

Below 1GHz	Above 1GHz
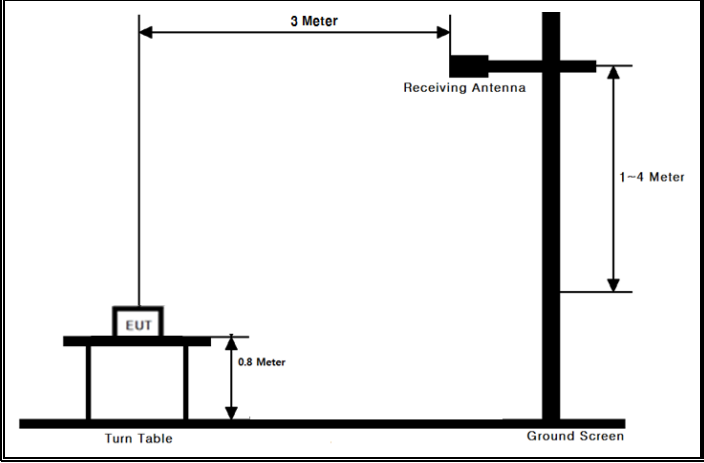	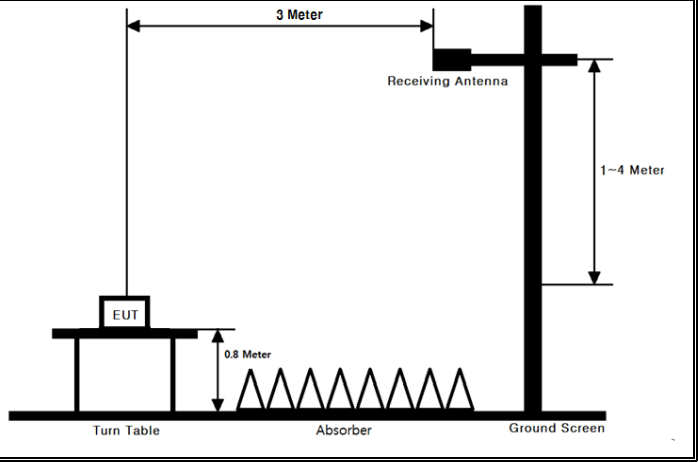

These measurements were performed at 3 m test site. The equipment under test is placed on a non-conductive table 0.8-meters above a turntable which is flush with the ground plane and 3 meters from the receive antenna. For measurements above 1GHz absorbers are placed on the floor between the turn table and the antenna mast in such a way so as to maximize the reduction of reflections. For measurements below 1 GHz, the absorbers are removed.

Test Procedure

- **ANSI/TIA-603-E-2016 - Section 2.2.17**
- **KDB971168 D01v02r02 - Section 5.2.1**

Test setting

1. Set span to at least 1.5 times the OBW.
2. Set RBW = 1-5 % of the OBW, not to exceed 1 MHz.
3. Set VBW ≥ 3 x RBW.
4. Set number of points in sweep ≥ 2 × span / RBW.
5. Sweep time = auto couple.
6. Detector = RMS (power averaging).
7. If the EUT can be configured to transmit continuously (i.e., burst duty cycle ≥ 98 %), then set the trigger to free run.
8. If the EUT cannot be configured to transmit continuously (i.e., burst duty cycle < 98 %), then use a sweep trigger with the level set to enable triggering only on full power bursts and configure the EUT to transmit at full power for the entire duration of each sweep.
   Ensure that the sweep time is less than or equal to the transmission burst duration.
9. Trace average at least 100 traces in power averaging (i.e., RMS) mode.
10. Compute the power by integrating the spectrum across the OBW of the signal using the instrument's band power measurement function, with the band limits set equal to the OBW band edges. If the instrument does not have a band power function, then sum the spectrum levels (in linear power units) at intervals equal to the RBW extending across the entire OBW of the spectrum.

The receiver antenna height and turntable rotations were adjusted for the highest reading on the receive spectrum analyzer.

A half-wave dipole was substituted in place of the EUT. This dipole antenna was driven by a signal generator and the level of the signal generator was adjusted to obtain the same receive spectrum analyzer reading. The conducted power at the terminal of the substitute antenna is measured.

The ERP/EIRP is calculated using the following formula:

ERP/EIRP = The conducted power at the substitute antenna`s terminal [dBm] + Substitute Antenna gain [dBd for ERP , dBi for EIRP]

For readings above 1 GHz, the above procedure is repeated using horn antennas and the difference
Between the gain of the horn antenna and an isotropic antenna are taken into consideration.

3.2 PEAK TO AVERAGE RATIO

Test set-up

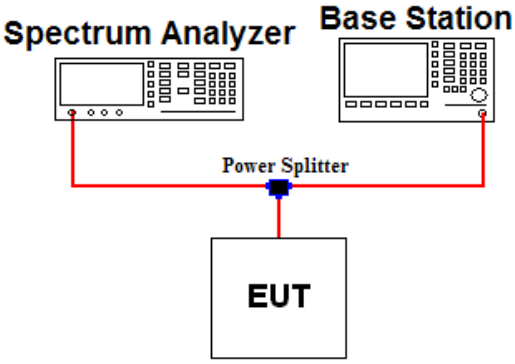

Test Procedure

- **KDB971168 D01v02r02 - Section 5.7.1**

A peak to average ratio measurement is performed at the conducted port of the EUT.
The spectrum analyzers Complementary Cumulative Distribution Function (CCDF) measurement profile is used to determine the largest deviation between the average and the peak power of the EUT in a given bandwidth. The CCDF curve shows how much time the peak waveform spends at or above a given average power level. The present of time the signal spends at or above the level defines the probability for that particular power level.

Test setting

The spectrum Analyzer`s CCDF measurement function is enabled.

1. Set resolution/measurement bandwidth ≥ signal`s occupied bandwidth.
2. Set the number of counts to a value that stabilizes the measured CCDF curve
3. Set the measurement interval as follows:
   1) For continuous transmissions, set to 1 ms.
   2) For burst transmissions, employ an external trigger that is synchronized with the EUT burst timing sequence, or use the internal burst trigger with a trigger level that allows the burst to stabilize and set the measurement interval to a time that is less than or equal to the burst duration.
4. Record the maximum PAPR level associated with a probability of 0.1 %

3.3 OCCUPIED BANDWIDTH.

Test set-up

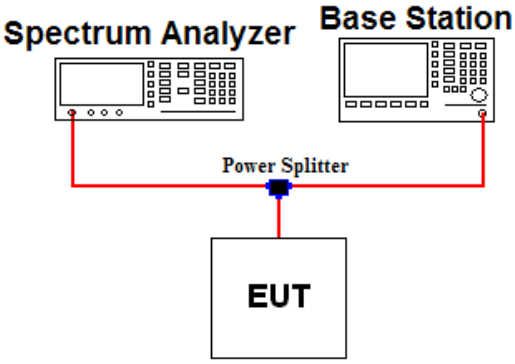

Test Procedure

- **KDB971168 D01v02r02 - Section 4.2**

The occupied bandwidth, that is the frequency bandwidth such that, below its lower and above its upper frequency limits, the mean powers radiated are each equal to 0.5 percent of the total mean power of a given emission.

Test setting

1. The signal analyzer`s automatic bandwidth measurement capability was used to perform the 99 % occupied bandwidth and the 26 dB bandwidth. The bandwidth measurement was not influenced by any intermediate power nulls in the fundamental emission.
2. RBW = 1 ~ 5 % of the expected OBW & VBW ≥ 3 X RBW
3. Detector = Peak
4. Trance mode = Max hold
5. Sweep = Auto couple
6. The trace was allowed to stabilize
7. If necessary, step 2 ~ 6 were repeated after changing the RBW such that it would be within 1 ~ 5 % of the 99 % occupied bandwidth observed in step 6.

3.4 BAND EDGE EMISSIONS AT ANTENNA TERMINAL

Test set-up

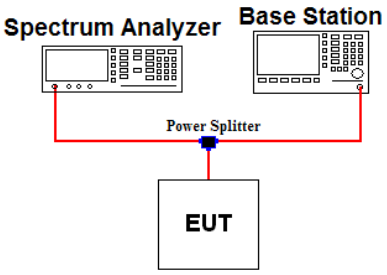

Test Procedure

- **KDB971168 D01v02r02 - Section 6**

All out of band emissions are measured by means of a calibrated spectrum analyzer. The EUT was setup to maximum output power at its lowest and highest channel with all bandwidths, modulations and RB configurations.

The power of any spurious emission shall be attenuated below the transmitter power (P) by at least 43 + 10 log(P) dB or requirements on note 3 in case of band 7 and 41.

Test setting

1. Start and stop frequency were set such that the band edge would be placed in the center of the plot
2. Span was set large enough so as to capture all out of band emissions near the band edge
3. RBW ≥ 1 % of the emission bandwidth
4. VBW ≥ 3 X RBW
5. Detector = RMS & Trace mode = Max hold
6. Sweep time = Auto couple or 1 s for band edge
7. Number of sweep point ≥ 2 X span / RBW
8. The trace was allowed to stabilize

Note 1: Per Part 22.917(b)(1) / 24.238(b) / 27.53(h)(3) in the 1 MHz bands immediately outside and adjacent to the frequency block a resolution bandwidth of at least one percent of the emission bandwidth of the fundamental emission of the transmitter may be employed to demonstrate compliance with the out-of-band emissions limit. The emission bandwidth is defined as the width of the signal between two points, one below the carrier center frequency and one above the carrier center frequency, outside of which all emission are attenuated at least 26 dB below the transmitter power.

Note 2: Per Part 27(g) for operations in the 600 MHz band and the 698-746 MHz band, compliance with this provision is based on the use of measurement instrumentation employing a resolution bandwidth of 100 kilohertz or greater. However, in the 100 kilohertz bands immediately outside and adjacent to a licensee's frequency block, a resolution bandwidth of at least 30 kHz may be employed.

Note 3: For part 27.53(m)(4) the attenuation factor shall be not less than 40 + 10 log (P) dB on all frequencies between the channel edge and 5 megahertz from the channel edge, 43 + 10 log (P) dB on all frequencies between 5 megahertz and X megahertz from the channel edge, and 55 + 10 log (P) dB on all frequencies more than X megahertz from the channel edge, where X is the greater of 6 megahertz or the actual emission bandwidth as defined in paragraph (m)(6) of this section. In addition, the attenuation factor shall not be less that 43 + 10 log (P) dB on all frequencies between 2490.5 MHz and 2496 MHz and 55 + 10 log (P) dB at or below 2490.5 MHz.

Note 4: Per part 27.53(m)(6) in the 1 MHz bands immediately outside and adjacent to the frequency block a resolution bandwidth of at least two percent may be employed, except when the 1 MHz band is 2495-2496 MHz, in which case a resolution bandwidth of at least one percent may be employed.

3.5 SPURIOUS AND HARMONIC EMISSIONS AT ANTENNA TERMINAL

Test set-up

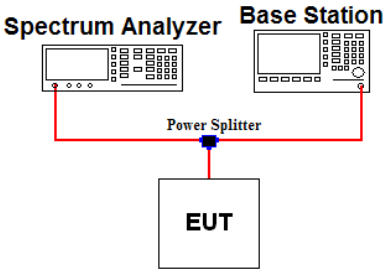

Test Procedure

- **KDB971168 D01v02r02 - Section 6**

The level of the carrier and the various conducted spurious and harmonic frequencies is measured by means of a calibrated spectrum analyzer. The EUT was setup to maximum output power at its low, middle, high channel with all bandwidths, modulations and RB configurations. The spectrum is scanned from 9 kHz up to a frequency including its 10th harmonic.

The power of any spurious emission shall be attenuated below the transmitter power (P) by at least 43 + 10 log(P) dB or 55 + 10 log(P) in case of band 7 and 41.

Test setting

1. RBW = 100 kHz(Below 1 GHz) or 1 MHz(Above 1 GHz) & VBW ≥ 3 X RBW (Refer to Note 1)
2. Detector = RMS & Trace mode = Max hold
3. Sweep time = Auto couple
4. Number of sweep point ≥ 2 X span / RBW
5. The trace was allowed to stabilize

Note 1: Compliance with these provisions is based on the use of measurement instrumentation employing a resolution bandwidth of 100 kHz or greater for frequencies less than 1GHz and 1MHz or greater for frequencies greater than 1GHz.

3.6 UNDESIRABLE EMISSIONS

Test Set-up

Below 1GHz	Above 1GHz
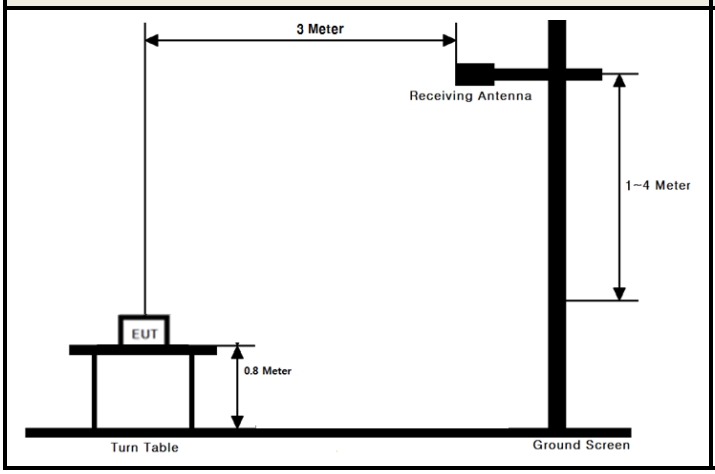	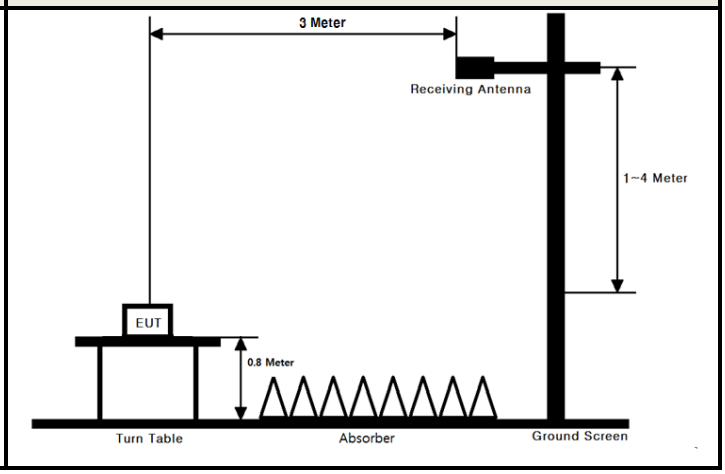

These measurements were performed at 3 test site. The equipment under test is placed on a non-conductive table 0.8-meters above a turntable which is flush with the ground plane and 3 meters from the receive antenna. For measurements above 1GHz absorbers are placed on the floor between the turn table and the antenna mast in such a way so as to maximize the reduction of reflections. For measurements below 1 GHz, the absorbers are removed.

Test Procedure

- **ANSI/TIA-603-E-2016 - Section 2.2.12**
- **KDB971168 D01v02r02 - Section 5.8**

Test setting

1. RBW = 100 kHz for below 1 GHz and 1 MHz for above 1 GHz / VBW ≥ 3 X RBW
2. Detector = RMS & Trace mode = Max hold
3. Sweep time = Auto couple
4. Number of sweep point ≥ 2 X span / RBW
5. The trace was allowed to stabilize

The receive antenna height and turntable rotations were adjusted for the highest reading on the receive spectrum analyzer.

For radiated power measurements below 1 GHz, a half-wave dipole was substituted in place of the EUT. This dipole antenna was driven by a signal generator and the level of the signal generator was adjusted to obtain the same spectrum analyzer reading.

For radiated power measurements above 1 GHz, a Horn antenna was substituted in place of the EUT. This Horn antenna was driven by a signal generator and the level of the signal generator was adjusted to obtain the same spectrum analyzer reading. The difference between the gain of the horn and an isotropic antenna are taken into consideration.

This measurement was performed with the EUT oriented in 3 orthogonal axis.

3.7 FREQUENCY STABILITY

Test Set-up

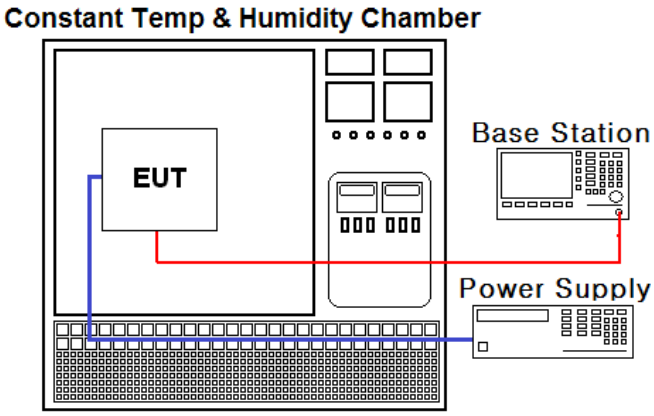

Test Procedure

- **ANSI/TIA-603-E-2016**
- **KDB971168 D01v02r02 - Section 9**

The frequency stability of the transmitter is measured by:

a.) **Temperature:**
The temperature is varied from - 30 °C to + 50 °C using an environmental chamber.

b.) **Primary Supply Voltage:**
The primary supply voltage is varied from 85 % to 115 % of the nominal value for non hand-carried battery and AC powered equipment. For hand-carried, battery-powered equipment, primary supply voltage is reduced to the battery operating end point which shall be specified by the manufacturer.

Specification:

The frequency stability shall be sufficient to ensure that the fundamental emission stays within the authorized frequency block for Part 24, 27. The frequency stability of the transmitter shall be maintained within ± 0.000 25 % (± 2.5 ppm) of the center frequency for Part 22.

Time Period and Procedure:

1. The carrier frequency of the transmitter is measured at room temperature.
(20 °C to provide a reference)

2. The equipment is turned on in a “standby” condition for one minute before applying power to the transmitter. Measurement of the carrier frequency of the transmitter is made within one minute after applying power to the transmitter.

3. Frequency measurements are made at 10 °C intervals ranging from -30 °C to +50 °C.
A period of at least one half-hour is provided to allow stabilization of the equipment at each temperature level.

4. LIST OF TEST EQUIPMENT

Type	Manufacturer	Model	Cal.Date (yy/mm/dd)	Next.Cal. Date (yy/mm/dd)	S/N
Spectrum Analyzer	Agilent Technologies	N9020A	16/10/11	17/10/11	MY46471251
Spectrum Analyzer	Agilent Technologies	N9020A	17/01/11	18/01/11	MY50200828
Spectrum Analyzer	Agilent Technologies	N9030A	16/10/18	17/10/18	MY53310140
DC power supply	Agilent Technologies	66332A	16/09/08	17/09/08	GB42110550
Multimeter	FLUKE	17B	17/04/12	18/04/12	26030065WS
Temp & Humi Test Chamber	SJ Science	SJ-TH-S50	17/01/25	18/01/25	SJ-TH-S50-120203
Thermohygrometer	BODYCOM	BJ5478	17/01/11	18/01/11	1209
Radio Communication Analyzer	Anritsu	MT8820C	17/01/03	18/01/03	6201274516
Attenuator	SMAJK	SMAJK-2-3	16/10/11	17/10/11	2
Signal Generator	Rohde Schwarz	SMBV100A	17/01/04	18/01/04	255571
Signal Generator	Rohde Schwarz	SMF100A	17/04/21	18/04/21	102341
Loop Antenna	Schwarzbeck	FMZB1513	16/04/22	18/04/22	1513-128
BILOG ANTENNA	Schwarzbeck	VULB 9160	16/11/11	18/11/11	3151
Dipole Antenna	Schwarzbeck	VHA9103	17/03/14	19/03/14	2116
Dipole Antenna	Schwarzbeck	VHA9103	16/04/15	18/04/15	2117
Dipole Antenna	Schwarzbeck	UHA9105	17/03/14	19/03/14	2261
Dipole Antenna	Schwarzbeck	UHA9105	16/04/15	18/04/15	2262
HORN ANT	ETS	3117	16/05/13	18/05/13	00140394
HORN ANT	ETS	3117	16/02/26	18/02/26	00152145
HORN ANT	A.H.Systems	SAS-574	17/04/25	19/04/25	154
HORN ANT	A.H.Systems	SAS-574	15/09/03	17/09/03	155
PreAmplifier	TSJ	MLA-010K01-B01-27	17/03/06	18/03/06	1844539
Amplifier	RF Bay Inc	MPA-40-40	17/04/12	18/04/12	21151801
Amplifier	EMPOWER	BBS3Q7ELU	16/09/08	17/09/08	1020
PreAmplifier	Agilent	8449B	16/10/19	17/10/19	3008A02108
PreAmplifier	A.H.Systems Inc.	PAM-1840VH	16/12/04	17/12/04	163
High-pass filter	Wainwright	WHKX12-935-1000-15000-40SS	16/09/09	17/09/09	7
High-pass filter	Wainwright	WHKX12-2580-3000-18000-80SS	16/09/09	17/09/09	3
High-pass filter	Wainwright	WHNX5.0	16/09/08	17/09/08	8
Power Splitter	Anritsu	K241B	17/01/11	18/01/11	016681

5. SUMMARY OF TEST RESULTS

FCC Part Section(s)	Test Description	Test Limit	Test Condition	Status Note 1
2.1046	Conducted Output Power	N/A	Conducted	C Note2
2.1049	Occupied Bandwidth	N/A		C
27.50(d.5)	Peak to Average Ratio	< 13 dB		C
2.1051 22.917(a) 27.53(g) 27.53(h)	Band Edge / Conducted Spurious Emissions	> 43 + 10log$_{10}$(P) dB at Band edge and for all out-of-band emissions		C
27.53(m)	Band Edge / Conducted Spurious Emissions	> 40 + 10log10 (P) dB at channel edge and 5 MHz from the channel edge > 43 + 10log10 (P) dB at 5 MHz and X MHz from the channel edge > 55 + 10log10 (P) dB at all frequencies more than X MHz from the channel edge		C
2.1055 22.355 27.54	Frequency Stability	< 2.5 ppm (Part 22) Fundamental emissions must stay within Authorized frequency block (Part 27)		C
27.50(c.10)	Radiated Output Power (B12, 17)	< 3 Watts max. ERP	Radiated Note3	C
22.913(a.2)	Radiated Output Power (B5)	< 7 Watts max. ERP		C
27.50(d.4)	Radiated Output Power (B4)	< 1 Watts max. EIRP		C
27.50(h.2)	Radiated Output Power(B7, 41)	< 2 Watts max. EIRP		C
2.1053 22.917(a) 27.53(g) 27.53(h)	Undesirable Emissions	> 43 + 10log$_{10}$(P) dB for all out-of-band emissions		C
27.53(m)	Undesirable Emissions(B7, 41)	> 55 + 10log$_{10}$(P) dB for all out-of-band emissions		C

Note 1: **C**=Comply **NC**=Not Comply **NT**=Not Tested **NA**=Not Applicable
Note 2: Refer to RF Exposure Report (Test Report SAR)
Note 3: This device supports wireless charging capability.
So per KDB648474 D03v01r04, the radiated test items were performed both normal and charging conditions. For wireless charging condition, the handset is placed on the representative charging pad under normal conditions and in a simulated call configuration.
And the worst case data was reported.

6. SAMPLE CALCULATION

A. Emission Designator

LTE Band 12(QPSK)

Emission Designator = **8M95G7D**
LTE OBW = 8.952 MHz
G = Phase Modulation
7 = Quantized/Digital Info
D = Data Transmission

LTE Band 12(16QAM)

Emission Designator = **8M96W7D**
LTE OBW = 8.955 MHz
W = Amplitude/Angle Modulated
7 = Quantized/Digital Info
D = Data Transmission

LTE Band 12(64QAM)

Emission Designator = **8M94W7D**
LTE OBW = 8.942 MHz
G = Phase Modulation
7 = Quantized/Digital Info
D = Data Transmission

LTE Band 17(QPSK)

Emission Designator = **8M95G7D**
LTE OBW = 8.953 MHz
G = Phase Modulation
7 = Quantized/Digital Info
D = Data Transmission

LTE Band 17(16QAM)

Emission Designator = **8M95W7D**
LTE OBW = 8.947 MHz
W = Amplitude/Angle Modulated
7 = Quantized/Digital Info
D = Data Transmission

LTE Band 17(64QAM)

Emission Designator = **8M96W7D**
LTE OBW = 8.959 MHz
W = Amplitude/Angle Modulated
7 = Quantized/Digital Info
D = Data Transmission

LTE Band 5(QPSK)

Emission Designator = **8M96G7D**
LTE OBW = 8.957 MHz
G = Phase Modulation
7 = Quantized/Digital Info
D = Data Transmission

LTE Band 5(16QAM)

Emission Designator = **8M95W7D**
LTE OBW = 8.946 MHz
W = Amplitude/Angle Modulated
7 = Quantized/Digital Info
D = Data Transmission

LTE Band 5(64QAM)

Emission Designator = **8M95W7D**
LTE OBW = 8.947 MHz
W = Amplitude/Angle Modulated
7 = Quantized/Digital Info
D = Data Transmission

LTE Band 4(QPSK)

Emission Designator = **17M9G7D**
LTE OBW = 17.868 MHz
G = Phase Modulation
7 = Quantized/Digital Info
D = Data Transmission

LTE Band 4(16QAM)

Emission Designator = **17M9W7D**
LTE OBW = 17.869 MHz
W = Amplitude/Angle Modulated
7 = Quantized/Digital Info
D = Data Transmission

LTE Band 4(64QAM)

Emission Designator = **17M9W7D**
LTE OBW = 17.883 MHz
W = Amplitude/Angle Modulated
7 = Quantized/Digital Info
D = Data Transmission

LTE Band 41(QPSK)

Emission Designator = **17M8G7D**
LTE OBW = 17.816 MHz
G = Phase Modulation
7 = Quantized/Digital Info
D = Data Transmission

LTE Band 41(16QAM)

Emission Designator = **17M9W7D**
LTE OBW = 17.875 MHz
W = Amplitude/Angle Modulated
7 = Quantized/Digital Info
D = Data Transmission

LTE Band 41(64QAM)

Emission Designator = **17M8W7D**
LTE OBW = 17.829 MHz
W = Amplitude/Angle Modulated
7 = Quantized/Digital Info
D = Data Transmission

LTE Band 7(QPSK)

Emission Designator = **17M9G7D**
LTE OBW = 17.869 MHz
G = Phase Modulation
7 = Quantized/Digital Info
D = Data Transmission

LTE Band 7(16QAM)

Emission Designator = **17M9W7D**
LTE OBW = 17.876 MHz
W = Amplitude/Angle Modulated
7 = Quantized/Digital Info
D = Data Transmission

LTE Band 7(64QAM)

Emission Designator = **17M9W7D**
LTE OBW = 17.859 MHz
W = Amplitude/Angle Modulated
7 = Quantized/Digital Info
D = Data Transmission

B. For substitution method

Channel Bandwidth (MHz)	Test Frequency (MHz)	Test Mode	RB Size/ Offset	Spectrum Reading Value(dBm)	EUT Axis	Ant Pol (H/V)	Level(dBm) @ Ant Terminal	TX Ant Gain (dBi)	EIRP (dBm)	EIRP (W)
20	1720	QPSK	1/0	-24.47	X	H	15.56	5.67	21.34	0.136

ERP or EIRP = Level @ Ant Terminal LEVEL(dBm) + Tx Ant. Gain

1) The EUT mounted on a non-conductive turntable is 0.8 meter above test site ground level.
2) During the test, the turn table is rotated until the maximum signal is found.
3) Record the field strength meter's level.
4) Replace the EUT with dipole/Horn antenna that is connected to a calibrated signal generator.
5) Increase the signal generator output till the field strength meter's level is equal to the item (3).
6) The signal generator output level with substituted antenna gain is the rating of ERP, EIRP or Radiated spurious emission.

7. TEST DATA

7.1 OCCUPIED BANDWIDTH

- Plots of the EUT's Occupied Bandwidth are shown in Clause 8.1

7.2 PEAK TO AVERAGE RATIO

- Plots of the EUT's Peak- to- Average Ratio are shown in Clause 8.2

7.3 BAND EDEG EMISSIONS (Conducted)

- Plots of the EUT's Band Edge Emissions are shown in Clause 8.3

7.4 SPURIOUS AND HARMONICS EMISSIONS (Conducted)

- Plots of the EUT's Spurious Emissions are shown in Clause 8.4

7.5 ERP & EIRP

7.5.1 LTE Band 12

- Measurement data: Without wireless charging pad

Channel Bandwidth (MHz)	Test Frequency (MHz)	Test Mode	RB Size/ Offset	Ant Pol (H/V)	Level(dBm) @ Ant Terminal	TX Ant Gain (dBd)	ERP (dBm)	ERP (W)
10	704	QPSK	1/49	H	19.83	1.28	21.11	0.129
		16QAM	1/49	H	19.41	1.28	20.69	0.117
		64QAM	1/49	H	20.40	1.28	21.68	0.147
	711	QPSK	1/25	H	19.86	1.28	21.14	0.130
		16QAM	1/25	H	18.97	1.28	20.25	0.106
		64QAM	1/25	H	18.92	1.28	20.20	0.105
5	701.5	QPSK	1/0	H	20.20	1.28	21.48	0.141
		16QAM	1/0	H	19.36	1.28	20.64	0.116
		64QAM	1/0	H	19.37	1.28	20.65	0.116
	707.5	QPSK	1/0	H	20.32	1.28	21.60	0.145
		16QAM	1/0	H	19.62	1.28	20.90	0.123
		64QAM	1/0	H	19.58	1.28	20.86	0.122
	713.5	QPSK	1/0	H	18.98	1.28	20.26	0.106
		16QAM	1/0	H	18.58	1.28	19.86	0.097
		64QAM	1/0	H	18.42	1.28	19.70	0.093
3	700.5	QPSK	1/0	H	19.88	1.28	21.16	0.131
		16QAM	1/0	H	19.24	1.28	20.52	0.113
		64QAM	1/0	H	19.18	1.28	20.46	0.111
	707.5	QPSK	1/0	H	20.38	1.28	21.66	0.147
		16QAM	1/0	H	19.53	1.28	20.81	0.121
		64QAM	1/0	H	19.56	1.28	20.84	0.121
	714.5	QPSK	1/0	H	18.63	1.28	19.91	0.098
		16QAM	1/0	H	17.85	1.28	19.13	0.082
		64QAM	1/0	H	17.88	1.28	19.16	0.082
1.4	699.7	QPSK	1/2	H	20.15	1.28	21.43	0.139
		16QAM	1/2	H	19.38	1.28	20.66	0.116
		64QAM	1/2	H	19.30	1.28	20.58	0.114
	707.5	QPSK	1/2	H	20.08	1.28	21.36	0.137
		16QAM	1/2	H	19.20	1.28	20.48	0.112
		64QAM	1/2	H	19.07	1.28	20.35	0.108
	715.3	QPSK	1/2	H	18.20	1.28	19.48	0.089
		16QAM	1/2	H	17.69	1.28	18.97	0.079
		64QAM	1/2	H	17.54	1.28	18.82	0.076

Note: This device was tested under all bandwidths, modulations and RB configurations and the worst case data are reported in the table above.

- Measurement data: With wireless charging pad

Channel Bandwidth (MHz)	Test Frequency (MHz)	Test Mode	RB Size/ Offset	Ant Pol (H/V)	Level(dBm) @ Ant Terminal	TX Ant Gain (dBd)	ERP (dBm)	ERP (W)
10	711	QPSK	1/25	H	16.96	1.28	18.24	0.067
5	707.5	QPSK	1/0	H	17.75	1.28	19.03	0.080
3	707.5	QPSK	1/0	H	17.30	1.28	18.58	0.072
1.4	699.7	QPSK	1/2	H	17.11	1.28	18.39	0.069

Note: This device was tested under all bandwidths, modulations and RB configurations and the worst case data are reported in the table above.

7.5.2 LTE Band 17

- Measurement data: Without wireless charging pad

Channel Bandwidth (MHz)	Test Frequency (MHz)	Test Mode	RB Size/ Offset	Ant Pol (H/V)	Level(dBm) @ Ant Terminal	TX Ant Gain (dBd)	ERP (dBm)	ERP (W)
10	709	QPSK	1/25	H	20.34	1.28	21.62	0.145
		16QAM	1/25	H	19.46	1.28	20.74	0.119
		64QAM	1/25	H	19.86	1.28	21.14	0.130
	711	QPSK	1/25	H	19.93	1.28	21.21	0.132
		16QAM	1/25	H	19.10	1.28	20.38	0.109
		64QAM	1/25	H	18.93	1.28	20.21	0.105
5	706.5	QPSK	1/24	H	20.27	1.28	21.55	0.143
		16QAM	1/24	H	19.50	1.28	20.78	0.120
		64QAM	1/24	H	19.50	1.28	20.78	0.120
	710	QPSK	1/12	H	20.17	1.28	21.45	0.140
		16QAM	1/12	H	19.28	1.28	20.56	0.114
		64QAM	1/12	H	19.30	1.28	20.58	0.114
	713.5	QPSK	1/0	H	19.31	1.28	20.59	0.115
		16QAM	1/0	H	18.39	1.28	19.67	0.093
		64QAM	1/0	H	18.33	1.28	19.61	0.091

Note: This device was tested under all bandwidths, modulations and RB configurations and the worst case data are reported in the table above.

- Measurement data: With wireless charging pad

Channel Bandwidth (MHz)	Test Frequency (MHz)	Test Mode	RB Size/ Offset	Ant Pol (H/V)	Level(dBm) @ Ant Terminal	TX Ant Gain (dBd)	ERP (dBm)	ERP (W)
10	709	QPSK	1/25	H	19.42	1.28	20.70	0.117
5	706.5	QPSK	1/24	H	19.32	1.28	20.60	0.115

Note: This device was tested under all bandwidths, modulations and RB configurations and the worst case data are reported in the table above.

7.5.3 LTE Band 5

- Measurement data: Without wireless charging pad

Channel Bandwidth (MHz)	Test Frequency (MHz)	Test Mode	RB Size/ Offset	Ant Pol (H/V)	Level(dBm) @ Ant Terminal	TX Ant Gain (dBd)	ERP (dBm)	ERP (W)
10	829	QPSK	1/25	H	20.98	1.23	22.21	0.166
		16QAM	1/25	H	20.58	1.23	21.81	0.152
		64QAM	1/25	H	20.32	1.23	21.55	0.143
	836.5	QPSK	1/49	H	22.43	1.22	23.65	0.232
		16QAM	1/49	H	21.78	1.22	23.00	0.200
		64QAM	1/49	H	21.74	1.22	22.96	0.198
	844	QPSK	1/0	H	22.75	1.21	23.96	0.249
		16QAM	1/0	H	22.05	1.21	23.26	0.212
		64QAM	1/0	H	22.04	1.21	23.25	0.211
5	826.5	QPSK	1/12	H	20.47	1.23	21.70	0.148
		16QAM	1/12	H	19.93	1.23	21.16	0.131
		64QAM	1/12	H	19.55	1.23	20.78	0.120
	836.5	QPSK	1/12	H	22.03	1.22	23.25	0.211
		16QAM	1/12	H	21.33	1.22	22.55	0.180
		64QAM	1/12	H	21.05	1.22	22.27	0.169
	846.5	QPSK	1/12	H	22.44	1.21	23.65	0.232
		16QAM	1/12	H	21.63	1.21	22.84	0.192
		64QAM	1/12	H	21.38	1.21	22.59	0.182
3	825.5	QPSK	1/0	H	20.43	1.23	21.66	0.147
		16QAM	1/0	H	19.45	1.23	20.68	0.117
		64QAM	1/0	H	19.34	1.23	20.57	0.114
	836.5	QPSK	1/0	H	22.15	1.22	23.37	0.217
		16QAM	1/0	H	21.24	1.22	22.46	0.176
		64QAM	1/0	H	21.03	1.22	22.25	0.168
	847.5	QPSK	1/0	H	22.06	1.21	23.27	0.212
		16QAM	1/0	H	21.64	1.21	22.85	0.193
		64QAM	1/0	H	21.52	1.21	22.73	0.187
1.4	824.7	QPSK	1/2	H	20.49	1.23	21.72	0.149
		16QAM	1/2	H	19.44	1.23	20.67	0.117
		64QAM	1/2	H	19.29	1.23	20.52	0.113
	836.5	QPSK	1/2	H	22.02	1.22	23.24	0.211
		16QAM	1/2	H	21.28	1.22	22.50	0.178
		64QAM	1/2	H	21.21	1.22	22.43	0.175
	848.3	QPSK	1/2	H	21.95	1.21	23.16	0.207
		16QAM	1/2	H	21.47	1.21	22.68	0.185
		64QAM	1/2	H	21.34	1.21	22.55	0.180

Note: This device was tested under all bandwidths, modulations and RB configurations and the worst case data are reported in the table above.

- Measurement data: With wireless charging pad

Channel Bandwidth (MHz)	Test Frequency (MHz)	Test Mode	RB Size/ Offset	Ant Pol (H/V)	Level(dBm) @ Ant Terminal	TX Ant Gain (dBd)	ERP (dBm)	ERP (W)
10	844	QPSK	1/0	H	21.44	1.21	22.65	0.184
5	846.5	QPSK	1/12	H	20.58	1.21	21.79	0.151
3	836.5	QPSK	1/0	H	20.28	1.22	21.50	0.141
1.4	836.5	QPSK	1/2	H	20.45	1.22	21.67	0.147

Note: This device was tested under all bandwidths, modulations and RB configurations and the worst case data are reported in the table above.

7.5.4 LTE Band 4

- Measurement data: Without wireless charging pad

Channel Bandwidth (MHz)	Test Frequency (MHz)	Test Mode	RB Size/ Offset	Ant Pol (H/V)	Level(dBm) @ Ant Terminal	TX Ant Gain (dBi)	EIRP (dBm)	EIRP (W)
20	1720	QPSK	1/0	H	14.56	5.82	20.38	0.109
		16QAM	1/0	H	13.95	5.82	19.77	0.095
		64QAM	1/0	H	13.69	5.82	19.51	0.089
	1732.5	QPSK	1/0	H	14.66	5.75	20.41	0.110
		16QAM	1/0	H	14.53	5.75	20.28	0.107
		64QAM	1/0	H	14.15	5.75	19.90	0.098
	1745	QPSK	1/0	H	15.67	5.67	21.34	0.136
		16QAM	1/0	H	14.75	5.67	20.42	0.110
		64QAM	1/0	H	14.65	5.67	20.32	0.108
15	1717.5	QPSK	1/0	H	14.26	5.84	20.10	0.102
		16QAM	1/0	H	13.51	5.84	19.35	0.086
		64QAM	1/0	H	13.40	5.84	19.24	0.084
	1732.5	QPSK	1/0	H	15.14	5.75	20.89	0.123
		16QAM	1/0	H	14.28	5.75	20.03	0.101
		64QAM	1/0	H	14.15	5.75	19.90	0.098
	1747.5	QPSK	1/0	H	15.99	5.66	21.65	0.146
		16QAM	1/0	H	15.24	5.66	20.90	0.123
		64QAM	1/0	H	15.21	5.66	20.87	0.122
10	1715	QPSK	1/0	H	13.83	5.85	19.68	0.093
		16QAM	1/0	H	12.93	5.85	18.78	0.076
		64QAM	1/0	H	12.89	5.85	18.74	0.075
	1732.5	QPSK	1/0	H	15.03	5.75	20.78	0.120
		16QAM	1/0	H	14.51	5.75	20.26	0.106
		64QAM	1/0	H	14.34	5.75	20.09	0.102
	1750	QPSK	1/0	H	15.18	5.64	20.82	0.121
		16QAM	1/0	H	14.44	5.64	20.08	0.102
		64QAM	1/0	H	14.25	5.64	19.89	0.097

- Measurement data: Without wireless charging pad

Channel Bandwidth (MHz)	Test Frequency (MHz)	Test Mode	RB Size/ Offset	EUT Axis	Ant Pol (H/V)	Level(dBm) @ Ant Terminal	TX Ant Gain (dBi)	EIRP (dBm)	EIRP (W)
5	1712.5	QPSK	1/12	X	H	13.51	5.87	19.38	0.087
		16QAM	1/12	X	H	12.91	5.87	18.78	0.076
		64QAM	1/12	X	H	12.63	5.87	18.50	0.071
	1732.5	QPSK	1/12	X	H	15.51	5.75	21.26	0.134
		16QAM	1/12	X	H	14.58	5.75	20.33	0.108
		64QAM	1/12	X	H	14.46	5.75	20.21	0.105
	1752.5	QPSK	1/12	X	H	14.66	5.63	20.29	0.107
		16QAM	1/12	X	H	14.21	5.63	19.84	0.096
		64QAM	1/12	X	H	14.24	5.63	19.87	0.097
3	1711.5	QPSK	1/0	X	H	12.98	5.87	18.85	0.077
		16QAM	1/0	X	H	12.43	5.87	18.30	0.068
		64QAM	1/0	X	H	12.41	5.87	18.28	0.067
	1732.5	QPSK	1/0	X	H	15.33	5.75	21.08	0.128
		16QAM	1/0	X	H	14.70	5.75	20.45	0.111
		64QAM	1/0	X	H	14.48	5.75	20.23	0.105
	1753.5	QPSK	1/0	X	H	15.21	5.62	20.83	0.121
		16QAM	1/0	X	H	14.35	5.62	19.97	0.099
		64QAM	1/0	X	H	14.20	5.62	19.82	0.096
1.4	1710.7	QPSK	1/2	X	H	12.84	5.88	18.72	0.074
		16QAM	1/2	X	H	12.50	5.88	18.38	0.069
		64QAM	1/2	X	H	12.45	5.88	18.33	0.068
	1732.5	QPSK	1/2	X	H	15.40	5.75	21.15	0.130
		16QAM	1/2	X	H	14.47	5.75	20.22	0.105
		64QAM	1/2	X	H	14.38	5.75	20.13	0.103
	1754.3	QPSK	1/2	X	H	14.84	5.61	20.45	0.111
		16QAM	1/2	X	H	14.17	5.61	19.78	0.095
		64QAM	1/2	X	H	13.98	5.61	19.59	0.091

Note: This device was tested under all bandwidths, modulations and RB configurations and the worst case data are reported in the table above.

- Measurement data: With wireless charging pad

Channel Bandwidth (MHz)	Test Frequency (MHz)	Test Mode	RB Size/ Offset	Ant Pol (H/V)	Level(dBm) @ Ant Terminal	TX Ant Gain (dBi)	EIRP (dBm)	EIRP (W)
20	1745	QPSK	1/0	H	15.61	5.67	21.28	0.134
15	1747.5	QPSK	1/0	H	15.95	5.66	21.61	0.145
10	1750	QPSK	1/0	H	15.08	5.64	20.72	0.118
5	1732.5	QPSK	1/12	H	15.34	5.75	21.09	0.129
3	1732.5	QPSK	1/0	H	15.22	5.75	20.97	0.125
1.4	1732.5	QPSK	1/2	H	15.20	5.75	20.95	0.124

Note: This device was tested under all bandwidths, modulations and RB configurations and the worst case data are reported in the table above.

7.5.5 LTE Band 41

- Measurement data: Without wireless charging pad

Channel Bandwidth (MHz)	Test Frequency (MHz)	Test Mode	RB Size/ Offset	Ant Pol (H/V)	Level(dBm) @ Ant Terminal	TX Ant Gain (dBi)	EIRP (dBm)	EIRP (W)
20	2506	QPSK	1/0	H	15.16	6.19	21.35	0.136
		16QAM	1/0	H	14.52	6.19	20.71	0.118
		64QAM	1/0	H	14.65	6.19	20.84	0.121
	2593	QPSK	1/0	H	13.43	6.23	19.66	0.092
		16QAM	1/0	H	13.05	6.23	19.28	0.085
		64QAM	1/0	H	12.70	6.23	18.93	0.078
	2680	QPSK	1/0	H	10.06	6.49	16.55	0.045
		16QAM	1/0	H	9.50	6.49	15.99	0.040
		64QAM	1/0	H	9.17	6.49	15.66	0.037
15	2503.5	QPSK	1/0	H	14.98	6.19	21.17	0.131
		16QAM	1/0	H	14.53	6.19	20.72	0.118
		64QAM	1/0	H	14.16	6.19	20.35	0.108
	2593	QPSK	1/0	H	13.41	6.23	19.64	0.092
		16QAM	1/0	H	12.64	6.23	18.87	0.077
		64QAM	1/0	H	11.99	6.23	18.22	0.066
	2682.5	QPSK	1/0	H	10.51	6.50	17.01	0.050
		16QAM	1/0	H	9.71	6.50	16.21	0.042
		64QAM	1/0	H	9.18	6.50	15.68	0.037
10	2501	QPSK	1/0	H	15.11	6.19	21.30	0.135
		16QAM	1/0	H	13.63	6.19	19.82	0.096
		64QAM	1/0	H	13.41	6.19	19.60	0.091
	2593	QPSK	1/0	H	14.96	6.23	21.19	0.132
		16QAM	1/0	H	14.34	6.23	20.57	0.114
		64QAM	1/0	H	13.82	6.23	20.05	0.101
	2685	QPSK	1/0	H	12.19	6.51	18.70	0.074
		16QAM	1/0	H	11.24	6.51	17.75	0.060
		64QAM	1/0	H	10.88	6.51	17.39	0.055
5	2498.5	QPSK	1/12	H	15.34	6.19	21.53	0.142
		16QAM	1/12	H	14.89	6.19	21.08	0.128
		64QAM	1/12	H	14.57	6.19	20.76	0.119
	2593	QPSK	1/12	H	14.56	6.23	20.79	0.120
		16QAM	1/12	H	13.02	6.23	19.25	0.084
		64QAM	1/12	H	12.52	6.23	18.75	0.075
	2687.5	QPSK	1/12	H	12.86	6.52	19.38	0.087
		16QAM	1/12	H	11.78	6.52	18.30	0.068
		64QAM	1/12	H	10.71	6.52	17.23	0.053

Note: This device was tested under all bandwidths, modulations and RB configurations and the worst case data are reported in the table above.

- Measurement data: With wireless charging pad

Channel Bandwidth (MHz)	Test Frequency (MHz)	Test Mode	RB Size/ Offset	Ant Pol (H/V)	Level(dBm) @ Ant Terminal	TX Ant Gain (dBi)	EIRP (dBm)	EIRP (W)
20	2506	QPSK	1/0	H	15.02	6.19	21.21	0.132
15	2503.5	QPSK	1/0	H	14.79	6.19	20.98	0.125
10	2501	QPSK	1/0	H	14.96	6.19	21.15	0.130
5	2498.5	QPSK	1/12	H	15.19	6.19	21.38	0.137

Note: This device was tested under all bandwidths, modulations and RB configurations and the worst case data are reported in the table above.

7.5.6 LTE Band 7

- Measurement data: Without wireless charging pad

Channel Bandwidth (MHz)	Test Frequency (MHz)	Test Mode	RB Size/ Offset	Ant Pol (H/V)	Level(dBm) @ Ant Terminal	TX Ant Gain (dBi)	EIRP (dBm)	EIRP (W)
20	2510	QPSK	1/99	H	14.97	6.19	21.16	0.131
		16QAM	1/99	H	14.51	6.19	20.70	0.117
		64QAM	1/99	H	14.43	6.19	20.62	0.115
	2535	QPSK	1/99	H	14.67	6.21	20.88	0.122
		16QAM	1/99	H	14.17	6.21	20.38	0.109
		64QAM	1/99	H	13.53	6.21	19.74	0.094
	2560	QPSK	1/99	H	13.64	6.21	19.85	0.097
		16QAM	1/99	H	13.03	6.21	19.24	0.084
		64QAM	1/99	H	13.01	6.21	19.22	0.084
15	2507.5	QPSK	1/74	H	14.70	6.19	20.89	0.123
		16QAM	1/74	H	14.28	6.19	20.47	0.111
		64QAM	1/74	H	13.92	6.19	20.11	0.103
	2535	QPSK	1/74	H	14.61	6.21	20.82	0.121
		16QAM	1/74	H	14.44	6.21	20.65	0.116
		64QAM	1/74	H	14.33	6.21	20.54	0.113
	2562.5	QPSK	1/74	H	14.03	6.21	20.24	0.106
		16QAM	1/74	H	13.20	6.21	19.41	0.087
		64QAM	1/74	H	13.11	6.21	19.32	0.086
10	2505	QPSK	1/25	H	14.45	6.19	20.64	0.116
		16QAM	1/25	H	14.07	6.19	20.26	0.106
		64QAM	1/25	H	13.63	6.19	19.82	0.096
	2535	QPSK	1/25	H	15.40	6.21	21.61	0.145
		16QAM	1/25	H	14.59	6.21	20.80	0.120
		64QAM	1/25	H	14.55	6.21	20.76	0.119
	2565	QPSK	1/25	H	13.38	6.22	19.60	0.091
		16QAM	1/25	H	12.72	6.22	18.94	0.078
		64QAM	1/25	H	12.45	6.22	18.67	0.074
5	2502.5	QPSK	1/12	H	14.33	6.19	20.52	0.113
		16QAM	1/12	H	13.57	6.19	19.76	0.095
		64QAM	1/12	H	13.47	6.19	19.66	0.092
	2535	QPSK	1/12	H	15.07	6.21	21.28	0.134
		16QAM	1/12	H	14.22	6.21	20.43	0.110
		64QAM	1/12	H	14.17	6.21	20.38	0.109
	2567.5	QPSK	1/12	H	13.24	6.22	19.46	0.088
		16QAM	1/12	H	12.67	6.22	18.89	0.077
		64QAM	1/12	H	12.49	6.22	18.71	0.074

Note: This device was tested under all bandwidths, modulations and RB configurations and the worst case data are reported in the table above.

- **Measurement data: With wireless charging pad**

Channel Bandwidth (MHz)	Test Frequency (MHz)	Test Mode	RB Size/ Offset	Ant Pol (H/V)	Level(dBm) @ Ant Terminal	TX Ant Gain (dBi)	EIRP (dBm)	EIRP (W)
20	2510	QPSK	1/99	H	14.25	6.19	20.44	0.111
15	2507.5	QPSK	1/74	H	14.19	6.19	20.38	0.109
10	2535	QPSK	1/25	H	15.17	6.21	21.38	0.137
5	2535	QPSK	1/12	H	15.20	6.21	21.41	0.138

Note: This device was tested under all bandwidths, modulations and RB configurations and the worst case data are reported in the table above.

7.6 UNDESIRABLE EMISSIONS (Radiated)

7.6.1 LTE Band 12

- Measurement data: Without wireless charging pad

B.W (MHz)	Test Freq. (MHz)	RB Size/ Offset	Test Mode	Freq.(MHz)	Ant Pol (H/V)	Level(dBm) @ Ant Terminal	TX Ant Gain(dBd)	Result		Limit (dBc)
								(dBm)	(dBc)	
10	704	1/49	QPSK	1416.91	H	-57.38	3.00	-54.38	75.49	34.11
				2125.21	H	-47.86	2.65	-45.21	66.32	
		1/49	16QAM	1416.60	H	-58.12	3.00	-55.12	75.81	33.69
				2125.03	H	-48.18	2.65	-45.53	66.22	
		1/49	64QAM	1416.36	H	-58.20	3.00	-55.20	75.89	34.68
				2125.25	H	-48.46	2.65	-45.81	66.50	
	711	1/25	QPSK	1421.80	H	-57.15	3.03	-54.12	75.26	34.14
				2133.24	H	-47.66	2.72	-44.94	66.08	
		1/25	16QAM	1412.79	H	-57.68	2.98	-54.70	74.95	33.25
				2133.28	H	-48.05	2.72	-45.33	65.58	
		1/25	64QAM	1421.41	H	-58.17	3.03	-55.14	75.39	33.20
				2133.22	H	-47.88	2.72	-45.16	65.41	
5	701.5	1/0	QPSK	1398.88	H	-57.40	2.89	-54.51	75.99	34.48
				2098.03	H	-48.29	2.42	-45.87	67.35	
		1/0	16QAM	1398.80	H	-57.86	2.89	-54.97	75.61	33.64
				2097.88	H	-48.50	2.42	-46.08	66.72	
		1/0	64QAM	1399.48	H	-58.03	2.89	-55.14	75.78	33.65
				2098.10	H	-48.81	2.42	-46.39	67.03	
	707.5	1/0	QPSK	1410.83	H	-57.44	2.97	-54.47	76.07	34.60
				2116.64	H	-48.50	2.57	-45.93	67.53	
		1/0	16QAM	1410.16	H	-58.04	2.96	-55.08	75.98	33.90
				2116.32	H	-48.39	2.57	-45.82	66.72	
		1/0	64QAM	1410.99	H	-57.84	2.97	-54.87	75.77	33.86
				2116.13	H	-48.84	2.57	-46.27	67.17	
	713.5	1/0	QPSK	1422.81	H	-57.92	3.04	-54.88	75.14	33.26
				2134.10	H	-48.37	2.73	-45.64	65.90	
		1/0	16QAM	1422.03	H	-58.12	3.03	-55.09	74.95	32.86
				2134.39	H	-48.40	2.73	-45.67	65.53	
		1/0	64QAM	1423.12	H	-57.69	3.04	-54.65	74.51	32.70
				2134.47	H	-48.73	2.73	-46.00	65.86	

- Measurement data: Without wireless charging pad

B.W (MHz)	Test Freq. (MHz)	RB Size/ Offset	Test Mode	Freq.(MHz)	Ant Pol (H/V)	Level(dBm) @ Ant Terminal	TX Ant Gain(dBd)	Result		Limit (dBc)
								(dBm)	(dBc)	
3	700.5	1/0	QPSK	1398.87	H	-57.70	2.89	-54.81	75.97	34.16
				2097.62	H	-48.39	2.41	-45.98	67.14	
		1/0	16QAM	1698.48	H	-57.43	3.79	-53.64	74.16	33.52
				2097.55	H	-48.57	2.41	-46.16	66.68	
		1/0	64QAM	1398.41	H	-58.04	2.88	-55.16	75.68	33.46
				2097.81	H	-48.71	2.42	-46.29	66.81	
	707.5	1/0	QPSK	1412.39	H	-58.24	2.97	-55.27	76.93	34.66
				2118.78	H	-48.17	2.59	-45.58	67.24	
		1/0	16QAM	1412.52	H	-58.30	2.98	-55.32	76.13	33.81
				2118.68	H	-48.75	2.59	-46.16	66.97	
		1/0	64QAM	1412.69	H	-57.93	2.98	-54.95	75.76	33.84
				2118.94	H	-48.87	2.59	-46.28	67.09	
	714.5	1/0	QPSK	1426.02	H	-58.40	3.06	-55.34	75.25	32.91
				2140.00	H	-48.30	2.78	-45.52	65.43	
		1/0	16QAM	1425.35	H	-58.46	3.05	-55.41	74.54	32.13
				2139.64	H	-48.71	2.78	-45.93	65.06	
		1/0	64QAM	1425.50	H	-58.42	3.05	-55.37	74.50	32.16
				2140.02	H	-48.76	2.78	-45.98	65.11	
1.4	699.7	1/2	QPSK	1399.50	H	-58.17	2.89	-55.28	76.71	34.43
				2098.96	H	-49.25	2.42	-46.83	68.26	
		1/2	16QAM	1398.93	H	-58.16	2.89	-55.27	75.93	33.66
				2098.72	H	-49.33	2.42	-46.91	67.57	
		1/0	64QAM	1398.69	H	-58.31	2.89	-55.42	76.08	33.58
				2098.88	H	-49.36	2.42	-46.94	67.60	
	707.5	1/2	QPSK	1414.87	H	-57.24	2.99	-54.25	75.61	34.36
				2122.31	H	-49.27	2.62	-46.65	68.01	
		1/2	16QAM	1415.03	H	-57.76	2.99	-54.77	75.25	33.48
				2122.15	H	-49.43	2.62	-46.81	67.29	
		1/0	64QAM	1414.55	H	-57.85	2.99	-54.86	75.34	33.35
				2122.27	H	-49.17	2.62	-46.55	67.03	
	715.3	1/2	QPSK	1430.22	H	-57.49	3.08	-54.41	73.89	32.48
				2145.88	H	-49.20	2.84	-46.36	65.84	
		1/2	16QAM	1430.17	H	-57.94	3.08	-54.86	73.83	31.97
				2145.38	H	-49.27	2.83	-46.44	65.41	
		1/0	64QAM	1430.37	H	-58.14	3.08	-55.06	74.03	31.82
				2145.65	H	-49.44	2.84	-46.60	65.57	

Note 1: Limit Calculation = 43 + $10\log_{10}$ (P[Watts])

Note 2: This device was tested under all bandwidths, modulations and RB configurations and the worst case data are reported in the table above.

Note 3: The frequency spectrum is examined from 9 kHz to the 10th harmonic of the fundamental frequency of the transmitter. No other spurious and harmonic emissions were reported greater than listed emissions above table.

- Measurement data: With wireless charging pad

B.W (MHz)	Test Freq. (MHz)	RB Size/ Offset	Test Mode	Freq.(MHz)	Ant Pol (H/V)	Level(dBm) @ Ant Terminal	TX Ant Gain(dBd)	Result		Limit (dBc)
								(dBm)	(dBc)	
10	711	1/25	QPSK	1412.64	H	-57.66	2.98	-54.68	72.92	31.24
				2133.51	H	-49.83	2.72	-47.11	65.35	
5	707.5	1/0	QPSK	1411.14	H	-58.31	2.97	-55.34	74.37	32.03
				2115.93	H	-50.15	2.56	-47.59	66.62	
3	707.5	1/0	QPSK	1412.54	H	-58.05	2.98	-55.07	73.65	31.58
				2118.74	H	-49.81	2.59	-47.22	65.80	
1.4	699.7	1/2	QPSK	1398.35	H	-58.03	2.88	-55.15	73.54	31.39
				2098.76	H	-50.22	2.42	-47.80	66.19	

Note 1: Limit Calculation = 43 + $10\log_{10}$ (P[Watts])

Note 2: This device was tested under all bandwidths, modulations and RB configurations and the worst case data are reported in the table above.

Note 3: The frequency spectrum is examined from 9 kHz to the 10th harmonic of the fundamental frequency of the transmitter. No other spurious and harmonic emissions were reported greater than listed emissions above table.

7.6.2 LTE Band 17

- Measurement data: Without wireless charging pad

B.W (MHz)	Test Freq. (MHz)	RB Size/ Offset	Test Mode	Freq.(MHz)	Ant Pol (H/V)	Level(dBm) @ Ant Terminal	TX Ant Gain(dBd)	Result		Limit (dBc)
								(dBm)	(dBc)	
10	709	1/25	QPSK	1419.94	H	-57.45	3.02	-54.43	76.05	34.62
				2127.40	H	-50.47	2.67	-47.80	69.42	
		1/25	16QAM	1419.83	H	-59.26	3.02	-56.24	76.98	33.74
				2127.17	H	-50.79	2.67	-48.12	68.86	
		1/25	64QAM	1419.81	H	-58.55	3.02	-55.53	76.27	34.14
				2127.05	H	-51.02	2.67	-48.35	69.09	
	711	1/25	QPSK	1421.67	H	-58.10	3.03	-55.07	76.28	34.21
				2133.30	H	-50.28	2.72	-47.56	68.77	
		1/25	16QAM	1420.64	H	-57.91	3.02	-54.89	75.27	33.38
				2133.27	H	-50.42	2.72	-47.70	68.08	
		1/25	64QAM	1420.57	H	-58.29	3.02	-55.27	75.65	33.21
				2133.30	H	-49.96	2.72	-47.24	67.62	
5	706.5	1/24	QPSK	1415.23	H	-58.45	2.99	-55.46	77.01	34.55
				2126.03	H	-50.07	2.66	-47.41	68.96	
		1/24	16QAM	1415.05	H	-59.38	2.99	-56.39	77.17	33.78
				2125.85	H	-50.14	2.66	-47.48	68.26	
		1/24	64QAM	1414.86	H	-58.75	2.99	-55.76	76.54	33.78
				2125.76	H	-50.47	2.65	-47.82	68.60	
	710	1/12	QPSK	1419.70	H	-58.25	3.02	-55.23	76.68	34.45
				2129.92	H	-49.76	2.69	-47.07	68.52	
		1/12	16QAM	1419.42	H	-58.32	3.02	-55.30	75.86	33.56
				2129.91	H	-50.43	2.69	-47.74	68.30	
		1/12	64QAM	1419.81	H	-57.96	3.02	-54.94	75.50	33.58
				2129.92	H	-49.82	2.69	-47.13	67.69	
	713.5	1/0	QPSK	1422.79	H	-57.92	3.04	-54.88	75.47	33.59
				2134.11	H	-48.24	2.73	-45.51	66.10	
		1/0	16QAM	1422.31	H	-58.06	3.03	-55.03	74.70	32.67
				2134.10	H	-49.28	2.73	-46.55	66.22	
		1/0	64QAM	1421.72	H	-58.02	3.03	-54.99	74.66	32.61
				2134.09	H	-49.33	2.73	-46.60	66.27	

Note 1: Limit Calculation = 43 + $10\log_{10}$ (P[Watts])

Note 2: This device was tested under all bandwidths, modulations and RB configurations and the worst case data are reported in the table above.

Note 3: The frequency spectrum is examined from 9 kHz to the 10th harmonic of the fundamental frequency of the transmitter. No other spurious and harmonic emissions were reported greater than listed emissions above table.

- Measurement data: With wireless charging pad

B.W (MHz)	Test Freq. (MHz)	RB Size/ Offset	Test Mode	Freq.(MHz)	Ant Pol (H/V)	Level(dBm) @ Ant Terminal	TX Ant Gain(dBd)	Result		Limit (dBc)
								(dBm)	(dBc)	
10	709	1/25	QPSK	1420.15	H	-57.96	3.02	-54.94	75.64	33.70
				2127.53	H	-50.04	2.67	-47.37	68.07	
5	706.5	1/24	QPSK	1414.62	H	-58.73	2.99	-55.74	76.34	33.60
				2125.87	H	-49.99	2.66	-47.33	67.93	

Note 1: Limit Calculation = 43 + $10\log_{10}$ (P[Watts])

Note 2: This device was tested under all bandwidths, modulations and RB configurations and the worst case data are reported in the table above.

Note 3: The frequency spectrum is examined from 9 kHz to the 10th harmonic of the fundamental frequency of the transmitter. No other spurious and harmonic emissions were reported greater than listed emissions above table.

7.6.3 LTE Band 5

- Measurement data: Without wireless charging pad

B.W (MHz)	Test Freq. (MHz)	RB Size/ Offset	Test Mode	Freq.(MHz)	Ant Pol (H/V)	Level(dBm) @ Ant Terminal	TX Ant Gain(dBd)	Result		Limit (dBc)
								(dBm)	(dBc)	
10	829	1/25	QPSK	1658.51	H	-57.78	3.78	-54.00	75.01	34.01
				2487.35	H	-47.36	4.05	-43.31	64.32	
		1/25	16QAM	1658.01	H	-58.08	3.78	-54.30	76.11	34.81
				2487.38	H	-48.11	4.05	-44.06	65.87	
		1/25	64QAM	1658.24	H	-58.00	3.78	-54.22	76.03	34.55
				2487.53	H	-48.17	4.04	-44.13	65.94	
	836.5	1/49	QPSK	1681.87	H	-56.65	3.78	-52.87	76.52	36.65
				2522.72	H	-48.22	4.05	-44.17	67.82	
		1/49	16QAM	1681.93	H	-57.12	3.78	-53.34	76.34	36.00
				2522.68	H	-48.03	4.05	-43.98	66.98	
		1/49	64QAM	1681.75	H	-57.08	3.78	-53.30	76.30	35.96
				2522.66	H	-48.38	4.05	-44.33	67.33	
	844	1/0	QPSK	1679.31	H	-57.62	3.78	-53.84	77.80	36.96
				2518.66	H	-47.78	4.05	-43.73	67.69	
		1/0	16QAM	1679.11	H	-57.92	3.78	-54.14	77.40	36.26
				2518.85	H	-48.10	4.05	-44.05	67.31	
		1/0	64QAM	1679.32	H	-57.63	3.78	-53.85	77.11	36.25
				2518.82	H	-48.37	4.05	-44.32	67.58	
5	826.5	1/12	QPSK	1653.16	H	-57.49	3.78	-53.71	75.41	34.70
				2479.32	H	-48.00	4.05	-43.95	65.65	
		1/12	16QAM	1652.91	H	-57.53	3.78	-53.75	74.91	34.16
				2479.63	H	-48.09	4.05	-44.04	65.20	
		1/12	64QAM	1652.89	H	-57.31	3.78	-53.53	74.69	33.78
				2479.28	H	-48.53	4.05	-44.48	65.64	
	836.5	1/12	QPSK	1673.10	H	-56.71	3.78	-52.93	76.18	36.25
				2509.59	H	-47.59	4.04	-43.55	66.80	
		1/12	16QAM	1672.90	H	-56.92	3.78	-53.14	75.69	35.55
				2509.39	H	-48.14	4.04	-44.10	66.65	
		1/12	64QAM	1673.03	H	-57.47	3.78	-53.69	76.24	35.27
				2509.49	H	-48.08	4.04	-44.04	66.59	
	846.5	1/12	QPSK	1693.11	H	-55.57	3.79	-51.78	75.43	36.65
				2539.36	H	-48.05	4.06	-43.99	67.64	
		1/12	16QAM	1692.88	H	-55.89	3.79	-52.10	74.94	35.84
				2539.43	H	-48.45	4.06	-44.39	67.23	
		1/12	64QAM	1692.90	H	-55.93	3.79	-52.14	74.98	35.59
				2539.32	H	-49.00	4.06	-44.94	67.78	

- Measurement data: Without wireless charging pad

B.W (MHz)	Test Freq. (MHz)	RB Size/ Offset	Test Mode	Freq.(MHz)	Ant Pol (H/V)	Level(dBm) @ Ant Terminal	TX Ant Gain(dBd)	Result		Limit (dBc)
								(dBm)	(dBc)	
3	825.5	1/0	QPSK	1648.59	H	-57.89	3.77	-54.12	75.78	34.66
				2472.72	H	-48.82	4.05	-44.77	66.43	
		1/0	16QAM	1648.58	H	-58.13	3.77	-54.36	75.04	33.68
				2472.77	H	-49.21	4.05	-45.16	65.84	
		1/0	64QAM	1648.47	H	-58.34	3.77	-54.57	75.25	33.57
				2472.64	H	-49.33	4.05	-45.28	65.96	
	836.5	1/0	QPSK	1670.63	H	-57.01	3.78	-53.23	76.60	36.37
				2505.83	H	-48.28	4.04	-44.24	67.61	
		1/0	16QAM	1670.58	H	-57.26	3.78	-53.48	75.94	35.46
				2505.57	H	-48.30	4.04	-44.26	66.72	
		1/0	64QAM	1670.28	H	-57.19	3.78	-53.41	75.87	35.25
				2505.82	H	-48.22	4.04	-44.18	66.64	
	847.5	1/0	QPSK	1692.52	H	-55.98	3.79	-52.19	75.46	36.27
				2538.87	H	-48.15	4.06	-44.09	67.36	
		1/0	16QAM	1692.62	H	-55.89	3.79	-52.10	74.95	35.85
				2538.61	H	-48.60	4.06	-44.54	67.39	
		1/0	64QAM	1692.77	H	-55.85	3.79	-52.06	74.91	35.73
				2538.69	H	-48.45	4.06	-44.39	67.24	
1.4	824.7	1/2	QPSK	1649.19	H	-55.69	3.77	-51.92	73.64	34.72
				2473.99	H	-48.11	4.05	-44.06	65.78	
		1/2	16QAM	1649.28	H	-58.43	3.77	-54.66	75.33	33.67
				2473.70	H	-48.42	4.05	-44.37	65.04	
		1/2	64QAM	1649.32	H	-58.16	3.77	-54.39	75.06	33.52
				2474.15	H	-48.74	4.05	-44.69	65.36	
	836.5	1/2	QPSK	1673.01	H	-57.31	3.78	-53.53	76.77	36.24
				2509.13	H	-47.67	4.04	-43.63	66.87	
		1/2	16QAM	1672.73	H	-57.79	3.78	-54.01	76.51	35.50
				2509.27	H	-47.94	4.04	-43.90	66.40	
		1/2	64QAM	1673.05	H	-58.01	3.78	-54.23	76.73	35.43
				2509.29	H	-48.30	4.04	-44.26	66.76	
	848.3	1/2	QPSK	1696.55	H	-56.60	3.79	-52.81	75.97	36.16
				2544.50	H	-48.05	4.06	-43.99	67.15	
		1/2	16QAM	1696.59	H	-56.47	3.79	-52.68	75.36	35.68
				2544.45	H	-48.45	4.06	-44.39	67.07	
		1/2	64QAM	1696.27	H	-56.85	3.79	-53.06	75.74	35.55
				2544.51	H	-48.68	4.06	-44.62	67.30	

Note 1: Limit Calculation = 43 + $10\log_{10}$ (P[Watts])

Note 2: This device was tested under all bandwidths, modulations and RB configurations and the worst case data are reported in the table above.

Note 3: The frequency spectrum is examined from 9 kHz to the 10th harmonic of the fundamental frequency of the transmitter. No other spurious and harmonic emissions were reported greater than listed emissions above table.

- Measurement data: With wireless charging pad

B.W (MHz)	Test Freq. (MHz)	RB Size/ Offset	Test Mode	Freq.(MHz)	Ant Pol (H/V)	Level(dBm) @ Ant Terminal	TX Ant Gain(dBd)	Result		Limit (dBc)
								(dBm)	(dBc)	
10	844	1/0	QPSK	1679.16	H	-58.23	3.78	-54.45	77.10	35.65
				2518.75	H	-51.03	4.05	-46.98	69.63	
5	846.5	1/12	QPSK	1693.13	H	-58.92	3.79	-55.13	76.92	34.79
				2539.56	H	-50.35	4.06	-46.29	68.08	
3	836.5	1/0	QPSK	1670.12	H	-58.47	3.78	-54.69	76.19	34.50
				2505.81	H	-50.90	4.04	-46.86	68.36	
1.4	836.55	1/2	QPSK	1672.63	H	-57.95	3.78	-54.17	75.84	34.67
				2509.07	H	-51.21	4.04	-47.17	68.84	

Note 1: Limit Calculation = 43 + $10\log_{10}$ (P[Watts])

Note 2: This device was tested under all bandwidths, modulations and RB configurations and the worst case data are reported in the table above.

Note 3: The frequency spectrum is examined from 9 kHz to the 10th harmonic of the fundamental frequency of the transmitter. No other spurious and harmonic emissions were reported greater than listed emissions above table.

7.6.4 LTE Band 4

- Measurement data: Without wireless charging pad

B.W (MHz)	Test Freq. (MHz)	RB Size/ Offset	Test Mode	Freq.(MHz)	Ant Pol (H/V)	Level(dBm) @ Ant Terminal	TX Ant Gain(dBi)	Result		Limit (dBc)
								(dBm)	(dBc)	
20	1720	1/0	QPSK	3422.19	H	-55.48	8.24	-47.24	67.62	33.38
				5133.15	H	-49.87	10.34	-39.53	59.91	
		1/0	16QAM	3422.58	H	-55.65	8.24	-47.41	67.18	32.77
				5133.04	H	-50.15	10.34	-39.81	59.58	
		1/0	64QAM	3422.46	H	-55.66	8.24	-47.42	67.19	32.51
				5133.28	H	-49.95	10.34	-39.61	59.38	
	1732.5	1/0	QPSK	3447.22	H	-55.48	8.33	-47.15	67.56	33.41
				5170.78	H	-50.49	10.40	-40.09	60.50	
		1/0	16QAM	3447.55	H	-56.22	8.33	-47.89	68.17	33.28
				5170.54	H	-50.65	10.40	-40.25	60.53	
		1/0	64QAM	3447.00	H	-56.48	8.32	-48.16	68.44	32.90
				5170.72	H	-50.65	10.40	-40.25	60.53	
	1745	1/0	QPSK	3472.38	H	-55.47	8.41	-47.06	68.40	34.34
				5208.42	H	-50.49	10.46	-40.03	61.37	
		1/0	16QAM	3472.35	H	-55.66	8.41	-47.25	67.67	33.42
				5208.33	H	-50.64	10.46	-40.18	60.60	
		1/0	64QAM	3472.42	H	-55.69	8.41	-47.28	67.70	33.32
				5208.18	H	-50.83	10.46	-40.37	60.79	
15	1717.5	1/0	QPSK	3421.60	H	-54.77	8.24	-46.53	66.63	33.10
				5132.63	H	-49.96	10.34	-39.62	59.72	
		1/0	16QAM	3421.71	H	-55.50	8.24	-47.26	66.61	32.35
				5132.46	H	-50.11	10.34	-39.77	59.12	
		1/0	64QAM	3421.72	H	-55.59	8.24	-47.35	66.70	32.34
				5132.73	H	-50.31	10.34	-39.97	59.32	
	1732.5	1/0	QPSK	3451.65	H	-55.42	8.34	-47.08	67.97	33.89
				5177.76	H	-49.80	10.41	-39.39	60.28	
		1/0	16QAM	3451.78	H	-55.44	8.34	-47.10	67.13	33.03
				5177.44	H	-50.49	10.41	-40.08	60.11	
		1/0	64QAM	3451.86	H	-55.88	8.34	-47.54	67.57	32.90
				5177.45	H	-50.43	10.41	-40.02	60.05	
	1747.5	1/0	QPSK	3481.54	H	-55.75	8.45	-47.30	68.95	34.65
				5222.55	H	-51.30	10.47	-40.83	62.48	
		1/0	16QAM	3481.46	H	-55.78	8.45	-47.33	68.23	33.90
				5222.20	H	-51.61	10.47	-41.14	62.04	
		1/0	64QAM	3481.78	H	-55.59	8.45	-47.14	68.04	33.87
				5222.33	H	-51.65	10.47	-41.18	62.08	

- Measurement data: Without wireless charging pad

B.W (MHz)	Test Freq. (MHz)	RB Size/ Offset	Test Mode	Freq.(MHz)	Ant Pol (H/V)	Level(dBm) @ Ant Terminal	TX Ant Gain(dBi)	Result		Limit (dBc)
								(dBm)	(dBc)	
10	1715	1/0	QPSK	3421.24	H	-55.25	8.23	-47.02	66.70	32.68
				5131.56	H	-49.53	10.33	-39.20	58.88	
		1/0	16QAM	3421.11	H	-55.65	8.23	-47.42	66.20	31.78
				5131.94	H	-50.11	10.33	-39.78	58.56	
		1/0	64QAM	3421.48	H	-55.25	8.24	-47.01	65.79	31.74
				5131.92	H	-50.24	10.33	-39.91	58.69	
	1732.5	1/0	QPSK	3456.49	H	-55.50	8.36	-47.14	67.92	33.78
				5184.33	H	-50.35	10.42	-39.93	60.71	
		1/0	16QAM	3456.51	H	-55.90	8.36	-47.54	67.80	33.26
				5184.26	H	-50.50	10.42	-40.08	60.34	
		1/0	64QAM	3456.70	H	-55.87	8.36	-47.51	67.77	33.09
				5184.27	H	-51.22	10.42	-40.80	61.06	
	1750	1/0	QPSK	3491.37	H	-55.13	8.48	-46.65	67.47	33.82
				5236.79	H	-51.19	10.48	-40.71	61.53	
		1/0	16QAM	3491.24	H	-55.73	8.48	-47.25	67.33	33.08
				5237.13	H	-51.47	10.48	-40.99	61.07	
		1/0	64QAM	3491.17	H	-55.55	8.48	-47.07	67.15	32.89
				5236.62	H	-51.64	10.48	-41.16	61.24	
5	1712.5	1/12	QPSK	3425.05	H	-55.32	8.25	-47.07	66.45	32.38
				5137.25	H	-50.04	10.34	-39.70	59.08	
		1/12	16QAM	3425.43	H	-55.37	8.25	-47.12	65.90	31.78
				5137.49	H	-50.42	10.34	-40.08	58.86	
		1/12	64QAM	3425.58	H	-56.02	8.25	-47.77	66.55	31.50
				5137.50	H	-50.66	10.34	-40.32	59.10	
	1732.5	1/12	QPSK	3464.93	H	-55.47	8.39	-47.08	68.34	34.26
				5197.38	H	-50.86	10.45	-40.41	61.67	
		1/12	16QAM	3465.01	H	-55.98	8.39	-47.59	67.92	33.33
				5197.53	H	-51.56	10.45	-41.11	61.44	
		1/12	64QAM	3465.25	H	-56.63	8.39	-48.24	68.57	33.21
				5197.41	H	-51.22	10.45	-40.77	61.10	
	1752.5	1/12	QPSK	3505.01	H	-55.19	8.51	-46.68	66.97	33.29
				5257.24	H	-51.40	10.49	-40.91	61.20	
		1/12	16QAM	3505.02	H	-55.43	8.51	-46.92	66.76	32.84
				5257.31	H	-51.86	10.49	-41.37	61.21	
		1/12	64QAM	3505.74	H	-55.93	8.51	-47.42	67.26	32.87
				5257.44	H	-52.32	10.49	-41.83	61.67	

- Measurement data: Without wireless charging pad

B.W (MHz)	Test Freq. (MHz)	RB Size/ Offset	Test Mode	Freq.(MHz)	Ant Pol (H/V)	Level(dBm) @ Ant Terminal	TX Ant Gain(dBi)	Result		Limit (dBc)
								(dBm)	(dBc)	
3	1711.5	1/0	QPSK	3421.08	H	-55.51	8.23	-47.28	66.13	31.85
				5130.73	H	-50.01	10.33	-39.68	58.53	
		1/0	16QAM	3420.52	H	-55.50	8.23	-47.27	65.57	31.30
				5130.89	H	-50.05	10.33	-39.72	58.02	
		1/0	64QAM	3420.65	H	-56.18	8.23	-47.95	66.25	31.28
				5130.95	H	-49.96	10.33	-39.63	57.93	
	1732.5	1/0	QPSK	3462.38	H	-55.34	8.38	-46.96	68.04	34.08
				5193.84	H	-50.46	10.44	-40.02	61.10	
		1/0	16QAM	3462.18	H	-55.63	8.38	-47.25	67.70	33.45
				5193.88	H	-50.69	10.44	-40.25	60.70	
		1/0	64QAM	3462.24	H	-56.19	8.38	-47.81	68.26	33.23
				5193.88	H	-51.65	10.44	-41.21	61.66	
	1753.5	1/0	QPSK	3504.75	H	-55.34	8.51	-46.83	67.66	33.83
				5257.21	H	-51.12	10.49	-40.63	61.46	
		1/0	16QAM	3504.56	H	-55.87	8.51	-47.36	67.33	32.97
				5256.70	H	-51.32	10.49	-40.83	60.80	
		1/0	64QAM	3504.36	H	-56.07	8.51	-47.56	67.53	32.82
				5256.72	H	-51.37	10.49	-40.88	60.85	
1.4	1710.7	1/2	QPSK	3421.27	H	-55.10	8.23	-46.87	65.59	31.72
				5132.09	H	-50.22	10.33	-39.89	58.61	
		1/2	16QAM	3421.41	H	-55.37	8.23	-47.14	65.52	31.38
				5131.97	H	-50.51	10.33	-40.18	58.56	
		1/2	64QAM	3421.45	H	-56.04	8.24	-47.80	66.18	31.33
				5131.89	H	-50.73	10.33	-40.40	58.78	
	1732.5	1/2	QPSK	3464.78	H	-55.52	8.39	-47.13	68.28	34.15
				5197.51	H	-50.54	10.45	-40.09	61.24	
		1/2	16QAM	3464.88	H	-55.52	8.39	-47.13	67.35	33.22
				5197.05	H	-51.04	10.44	-40.60	60.82	
		1/2	64QAM	3464.80	H	-55.93	8.39	-47.54	67.76	33.13
				5197.03	H	-51.66	10.44	-41.22	61.44	
	1754.3	1/2	QPSK	3508.38	H	-54.95	8.51	-46.44	66.89	33.45
				5262.54	H	-51.22	10.49	-40.73	61.18	
		1/2	16QAM	3508.47	H	-55.27	8.51	-46.76	66.54	32.78
				5262.94	H	-51.53	10.49	-41.04	60.82	
		1/2	64QAM	3508.09	H	-55.68	8.51	-47.17	66.95	32.59
				5262.45	H	-51.84	10.49	-41.35	61.13	

Note 1: Limit Calculation = 43 + $10\log_{10}$ (P[Watts])

Note 2: This device was tested under all bandwidths, modulations and RB configurations and the worst case data are reported in the table above.

Note 3: The frequency spectrum is examined from 9 kHz to the 10th harmonic of the fundamental frequency of the transmitter. No other spurious and harmonic emissions were reported greater than listed emissions above table.

- Measurement data: With wireless charging pad

B.W (MHz)	Test Freq. (MHz)	RB Size/ Offset	Test Mode	Freq.(MHz)	Ant Pol (H/V)	Level(dBm) @ Ant Terminal	TX Ant Gain(dBi)	Result		Limit (dBc)
								(dBm)	(dBc)	
20	1745	1/0	QPSK	3472.16	H	-56.52	8.41	-48.11	69.39	34.28
				5208.44	H	-51.73	10.46	-41.27	62.55	
15	1747.5	1/0	QPSK	3482.22	H	-56.23	8.45	-47.78	69.39	34.61
				5222.44	H	-51.87	10.47	-41.40	63.01	
10	1750	1/0	QPSK	3492.01	H	-56.41	8.48	-47.93	68.65	33.72
				5236.39	H	-52.52	10.48	-42.04	62.76	
5	1732.5	1/12	QPSK	3465.69	H	-56.51	8.39	-48.12	69.21	34.09
				5197.94	H	-52.05	10.45	-41.60	62.69	
3	1732.5	1/0	QPSK	3462.27	H	-56.34	8.38	-47.96	68.93	33.97
				5193.93	H	-52.63	10.44	-42.19	63.16	
1.4	1732.5	1/2	QPSK	3464.93	H	-56.78	8.39	-48.39	69.34	33.95
				5197.37	H	-52.06	10.45	-41.61	62.56	

Note 1: Limit Calculation = 43 + $10\log_{10}$ (P[Watts])

Note 2: This device was tested under all bandwidths, modulations and RB configurations and the worst case data are reported in the table above.

Note 3: The frequency spectrum is examined from 9 kHz to the 10th harmonic of the fundamental frequency of the transmitter. No other spurious and harmonic emissions were reported greater than listed emissions above table.

7.6.5 LTE Band 41

- Measurement data: Without wireless charging pad

B.W (MHz)	Test Freq. (MHz)	RB Size/ Offset	Test Mode	Freq.(MHz)	Ant Pol (H/V)	Level(dBm) @ Ant Terminal	TX Ant Gain(dBi)	Result		Limit (dBc)
								(dBm)	(dBc)	
20	2506	1/0	QPSK	4994.20	V	-52.60	10.10	-42.50	63.85	46.35
				7491.89	V	-49.48	12.23	-37.25	58.60	
		1/0	16QAM	4993.60	V	-52.90	10.10	-42.80	63.51	45.71
				7491.61	V	-50.00	12.23	-37.77	58.48	
		1/0	64QAM	4994.28	V	-52.83	10.10	-42.73	63.44	45.84
				7491.31	V	-49.91	12.23	-37.68	58.39	
	2593	1/0	QPSK	5165.55	V	-52.37	10.39	-41.98	61.64	44.66
				7752.30	V	-47.76	12.47	-35.29	54.95	
		1/0	16QAM	5165.65	V	-52.76	10.39	-42.37	61.65	44.28
				7752.43	V	-48.06	12.47	-35.59	54.87	
		1/0	64QAM	5166.63	V	-52.68	10.39	-42.29	61.57	43.93
				7752.71	V	-48.46	12.47	-35.99	55.27	
	2680	1/0	QPSK	5342.56	V	-52.16	10.55	-41.61	58.16	41.55
				5343.30	V	-52.60	10.55	-42.05	58.60	
		1/0	16QAM	5342.56	V	-52.39	10.55	-41.84	57.83	40.99
				8013.45	V	-50.98	12.80	-38.18	54.17	
		1/0	64QAM	5343.30	V	-52.49	10.55	-41.94	57.93	40.66
				8013.20	V	-51.33	12.80	-38.53	54.52	
15	2503.5	1/0	QPSK	4993.79	V	-53.72	10.10	-43.62	64.79	46.17
				7490.50	V	-49.94	12.23	-37.71	58.88	
		1/0	16QAM	4992.89	V	-53.80	10.10	-43.70	64.42	45.72
				7490.70	V	-50.23	12.23	-38.00	58.72	
		1/0	64QAM	4992.99	V	-54.09	10.10	-43.99	64.71	45.35
				7490.28	V	-50.51	12.23	-38.28	59.00	
	2593	1/0	QPSK	5172.78	V	-53.28	10.40	-42.88	62.52	44.64
				7759.30	V	-49.32	12.47	-36.85	56.49	
		1/0	16QAM	5172.14	V	-53.77	10.40	-43.37	62.24	43.87
				7759.06	V	-49.33	12.47	-36.86	55.73	
		1/0	64QAM	5173.09	V	-53.31	10.40	-42.91	61.78	43.22
				7759.39	V	-49.94	12.47	-37.47	56.34	
	2682.5	1/0	QPSK	5351.95	V	-52.14	10.55	-41.59	58.60	42.01
				8027.72	V	-50.20	12.80	-37.40	54.41	
		1/0	16QAM	5351.96	V	-52.29	10.55	-41.74	57.95	41.21
				8027.37	V	-50.65	12.80	-37.85	54.06	
		1/0	64QAM	5351.57	V	-52.51	10.55	-41.96	58.17	40.68
				8027.56	V	-50.82	12.80	-38.02	54.23	

- Measurement data: Without wireless charging pad

B.W (MHz)	Test Freq. (MHz)	RB Size/ Offset	Test Mode	Freq.(MHz)	Ant Pol (H/V)	Level(dBm) @ Ant Terminal	TX Ant Gain(dBi)	Result		Limit (dBc)
								(dBm)	(dBc)	
10	2501	1/0	QPSK	4993.20	V	-53.91	10.10	-43.81	65.11	46.30
				7515.06	V	-49.30	12.35	-36.95	58.25	
		1/0	16QAM	4993.26	V	-53.84	10.10	-43.74	63.56	44.82
				7489.94	V	-49.89	12.23	-37.66	57.48	
		1/0	64QAM	4993.64	V	-53.98	10.10	-43.88	63.70	44.60
				7489.72	V	-49.93	12.23	-37.70	57.52	
	2593	1/0	QPSK	5178.05	V	-53.50	10.41	-43.09	64.28	46.19
				7765.96	V	-48.93	12.47	-36.46	57.65	
		1/0	16QAM	5178.44	V	-53.69	10.41	-43.28	63.85	45.57
				7765.86	V	-49.65	12.47	-37.18	57.75	
		1/0	64QAM	5178.02	V	-53.36	10.41	-42.95	63.52	45.05
				7765.93	V	-49.42	12.47	-36.95	57.52	
	2685	1/0	QPSK	5361.02	V	-52.62	10.56	-42.06	60.76	43.70
				8041.66	V	-50.14	12.80	-37.34	56.04	
		1/0	16QAM	5360.84	V	-53.27	10.56	-42.71	60.46	42.75
				8041.79	V	-50.47	12.80	-37.67	55.42	
		1/0	64QAM	5361.22	V	-53.20	10.56	-42.64	60.39	42.39
				8041.67	V	-50.69	12.80	-37.89	55.64	
5	2498.5	1/12	QPSK	4997.18	V	-53.75	10.10	-43.65	65.18	46.53
				7495.46	V	-49.16	12.23	-36.93	58.46	
		1/12	16QAM	4997.63	V	-54.21	10.11	-44.10	65.18	46.08
				7495.72	V	-50.11	12.23	-37.88	58.96	
		1/12	64QAM	4997.07	H	-53.58	10.10	-43.48	64.56	45.76
				7495.15	V	-50.05	12.23	-37.82	58.90	
	2593	1/12	QPSK	5187.02	V	-52.95	10.43	-42.52	63.31	45.79
				7779.23	V	-50.40	12.47	-37.93	58.72	
		1/12	16QAM	5187.76	V	-53.49	10.43	-43.06	62.31	44.25
				7778.92	V	-50.97	12.47	-38.50	57.75	
		1/12	64QAM	5187.64	H	-53.56	10.43	-43.13	62.38	43.75
				7779.20	V	-50.89	12.47	-38.42	57.67	
	2687.5	1/12	QPSK	5375.18	V	-52.47	10.57	-41.90	61.28	44.38
				8062.42	V	-50.76	12.80	-37.96	57.34	
		1/12	16QAM	5375.16	V	-53.30	10.57	-42.73	61.03	43.30
				8062.66	V	-50.85	12.80	-38.05	56.35	
		1/12	64QAM	5375.02	H	-53.80	10.57	-43.23	61.53	42.23
				8062.53	V	-50.89	12.80	-38.09	56.39	

Note 1: Limit Calculation = 55 + $10\log_{10}$ (P[Watts])

Note 2: This device was tested under all bandwidths, modulations and RB configurations and the worst case data are reported in the table above.

Note 3: The frequency spectrum is examined from 9 kHz to the 10th harmonic of the fundamental frequency of the transmitter. No other spurious and harmonic emissions were reported greater than listed emissions above table.

- Measurement data: With wireless charging pad

B.W (MHz)	Test Freq. (MHz)	RB Size/ Offset	Test Mode	Freq.(MHz)	Ant Pol (H/V)	Level(dBm) @ Ant Terminal	TX Ant Gain(dBi)	Result		Limit (dBc)
								(dBm)	(dBc)	
20	2506	1/0	QPSK	4994.70	H	-53.39	10.10	-43.29	64.50	46.21
				7491.59	H	-50.08	12.23	-37.85	59.06	
15	2503.5	1/0	QPSK	4993.79	H	-53.38	10.10	-43.28	64.26	45.98
				7490.57	H	-50.24	12.23	-38.01	58.99	
10	2501	1/0	QPSK	4992.84	H	-53.61	10.10	-43.51	64.66	46.15
				7490.11	H	-50.51	12.23	-38.28	59.43	
5	2498.5	1/12	QPSK	4998.03	H	-53.64	10.11	-43.53	64.91	46.38
				7496.40	H	-50.37	12.23	-38.14	59.52	

Note 1: Limit Calculation = 55 + $10\log_{10}$ (P[Watts])

Note 2: This device was tested under all bandwidths, modulations and RB configurations and the worst case data are reported in the table above.

Note 3: The frequency spectrum is examined from 9 kHz to the 10th harmonic of the fundamental frequency of the transmitter. No other spurious and harmonic emissions were reported greater than listed emissions above table.

7.6.6 LTE Band 7

- Measurement data: Without wireless charging pad

B.W (MHz)	Test Freq. (MHz)	RB Size/ Offset	Test Mode	Freq.(MHz)	Ant Pol (H/V)	Level(dBm) @ Ant Terminal	TX Ant Gain(dBi)	Result		Limit (dBc)
								(dBm)	(dBc)	
20	2510	1/99	QPSK	5037.57	H	-52.62	10.17	-42.45	63.61	46.16
				7556.84	V	-48.38	12.35	-36.03	57.19	
		1/99	16QAM	5037.56	H	-52.83	10.17	-42.66	63.36	45.70
				7556.85	V	-48.67	12.35	-36.32	57.02	
		1/99	64QAM	5037.80	H	-52.93	10.17	-42.76	63.46	45.62
				7557.12	V	-48.66	12.35	-36.31	57.01	
	2535	1/99	QPSK	5087.91	H	-52.35	10.26	-42.09	62.97	45.88
				7631.65	V	-47.07	12.46	-34.61	55.49	
		1/99	16QAM	5087.36	H	-53.55	10.26	-43.29	63.67	45.38
				7631.71	V	-47.32	12.46	-34.86	55.24	
		1/99	64QAM	5087.98	H	-53.52	10.26	-43.26	63.64	44.74
				7631.83	V	-47.72	12.46	-35.26	55.64	
	2560	1/99	QPSK	5137.49	H	-50.42	10.34	-40.08	59.93	44.85
				7706.72	V	-50.07	12.47	-37.60	57.45	
		1/99	16QAM	5137.73	H	-53.70	10.34	-43.36	62.60	44.24
				7706.69	V	-47.87	12.47	-35.40	54.64	
		1/99	64QAM	5137.75	H	-53.98	10.34	-43.64	62.88	44.22
				7706.63	V	-47.54	12.47	-35.07	54.31	
15	2507.5	1/74	QPSK	5028.38	H	-52.24	10.16	-42.08	62.97	45.89
				7542.39	V	-48.74	12.35	-36.39	57.28	
		1/74	16QAM	5028.31	H	-52.75	10.16	-42.59	63.06	45.47
				7542.98	V	-49.28	12.35	-36.93	57.40	
		1/74	64QAM	5028.58	H	-52.68	10.16	-42.52	62.99	45.11
				7542.33	V	-49.73	12.35	-37.38	57.85	
	2535	1/74	QPSK	5083.54	H	-52.50	10.25	-42.25	63.07	45.82
				7624.89	V	-47.44	12.46	-34.98	55.80	
		1/74	16QAM	5083.38	H	-53.15	10.25	-42.90	63.55	45.65
				7624.86	V	-48.40	12.46	-35.94	56.59	
		1/74	64QAM	5083.48	H	-53.68	10.25	-43.43	64.08	45.54
				7624.84	V	-48.77	12.46	-36.31	56.96	
	2562.5	1/74	QPSK	5138.02	H	-53.14	10.34	-42.80	63.04	45.24
				7707.48	V	-47.59	12.47	-35.12	55.36	
		1/74	16QAM	5137.61	H	-53.68	10.34	-43.34	62.75	44.41
				7707.92	V	-48.47	12.47	-36.00	55.41	
		1/74	64QAM	5138.19	H	-53.77	10.34	-43.43	62.84	44.32
				7707.85	V	-48.61	12.47	-36.14	55.55	

- Measurement data: Without wireless charging pad

B.W (MHz)	Test Freq. (MHz)	RB Size/ Offset	Test Mode	Freq.(MHz)	Ant Pol (H/V)	Level(dBm) @ Ant Terminal	TX Ant Gain(dBi)	Result		Limit (dBc)
								(dBm)	(dBc)	
10	2505	1/25	QPSK	5009.96	H	-52.56	10.13	-42.43	63.07	45.64
				7515.06	V	-48.90	12.35	-36.55	57.19	
		1/25	16QAM	5010.06	H	-52.52	10.13	-42.39	62.65	45.26
				7515.28	V	-48.90	12.35	-36.55	56.81	
		1/25	64QAM	5010.07	H	-52.86	10.13	-42.73	62.99	44.82
				7515.22	V	-49.37	12.35	-37.02	57.28	
	2535	1/25	QPSK	5069.68	H	-52.53	10.23	-42.30	63.91	46.61
				7605.17	V	-47.82	12.46	-35.36	56.97	
		1/25	16QAM	5069.43	H	-52.49	10.23	-42.26	63.06	45.80
				7605.12	V	-48.65	12.46	-36.19	56.99	
		1/25	64QAM	5069.79	H	-52.46	10.23	-42.23	63.03	45.76
				7604.94	V	-48.62	12.46	-36.16	56.96	
	2565	1/25	QPSK	5130.33	H	-53.07	10.33	-42.74	62.34	44.60
				7695.31	V	-47.08	12.46	-34.62	54.22	
		1/25	16QAM	5129.98	H	-53.28	10.33	-42.95	61.89	43.94
				7695.31	V	-47.19	12.46	-34.73	53.67	
		1/25	64QAM	5130.41	H	-53.02	10.33	-42.69	61.63	43.67
				7695.24	V	-47.97	12.46	-35.51	54.45	
5	2502.5	1/12	QPSK	5005.39	H	-51.23	10.12	-41.11	61.63	45.52
				7507.34	V	-49.49	12.35	-37.14	57.66	
		1/12	16QAM	5005.49	H	-52.34	10.12	-42.22	61.98	44.76
				7507.42	H	-49.87	12.35	-37.52	57.28	
		1/12	64QAM	5005.24	H	-53.08	10.12	-42.96	62.72	44.66
				7507.96	V	-47.52	12.35	-35.17	54.93	
	2535	1/12	QPSK	5070.18	H	-52.02	10.23	-41.79	63.07	46.28
				7605.47	V	-48.60	12.46	-36.14	57.42	
		1/12	16QAM	5070.62	H	-52.60	10.23	-42.37	62.80	45.43
				7605.14	H	-48.60	12.46	-36.14	56.57	
		1/12	64QAM	5070.47	H	-52.84	10.23	-42.61	63.04	45.38
				7604.75	V	-48.73	12.46	-36.27	56.70	
	2567.5	1/12	QPSK	5135.10	H	-53.22	10.34	-42.88	62.34	44.46
				7702.16	V	-47.39	12.47	-34.92	54.38	
		1/12	16QAM	5515.21	H	-52.88	10.65	-42.23	61.12	43.89
				7702.27	H	-47.71	12.47	-35.24	54.13	
		1/12	64QAM	5134.96	H	-53.26	10.34	-42.92	61.81	43.71
				7702.30	V	-47.99	12.47	-35.52	54.41	

Note 1: Limit Calculation = 55 + $10\log_{10}$ (P[Watts])

Note 2: This device was tested under all bandwidths, modulations and RB configurations and the worst case data are reported in the table above.

Note 3: The frequency spectrum is examined from 9 kHz to the 10th harmonic of the fundamental frequency of the transmitter. No other spurious and harmonic emissions were reported greater than listed emissions above table.