FCC 47 CFR PART 22 SUBPART H
FCC 47 CFR PART 24 SUBPART E
FCC 47 CFR PART 27 SUBPART M
FCC 47 CFR PART 90 SUBPART S

C2PC CERTIFICATION TEST REPORT

FOR

GSM/CDMA/WCDMA/LTE Phone + Bluetooth, DTS/UNII a/b/g/n/ac and NFC

MODEL NUMBER: LGLS990, LG-LS990, LS990

FCC ID: ZNFLS990

REPORT NUMBER: 14U17849-1

ISSUE DATE: JUNE 5, 2014

Prepared for

LG ELECTRONICS MOBILECOMM U.S.A., INC
1000 SYLVAN AVENUE
ENGLEWOOD CLIFFS,
NEW JERSEY, 07632, U.S.A.

Prepared by

UL VERIFICATION SERVICES INC.
47173 BENICIA STREET
FREMONT, CA 94538, U.S.A.
TEL: (510) 771-1000
FAX: (510) 661-0888

Revision History

Rev.	Issue Date	Revisions	Revised By
--	06/05/14	Initial issue	P. Zhang

UL VERIFICATION SERVICES INC. FORM NO: CCSUP4701I
47173 BENICIA STREET, FREMONT, CA 94538, USA TEL: (510) 771-1000 FAX: (510) 661-0888

This report shall not be reproduced except in full, without the written approval of UL Verification Services Inc.

TABLE OF CONTENTS

1. ATTESTATION OF TEST RESULTS 5

2. TEST METHODOLOGY 6

3. FACILITIES AND ACCREDITATION 6

4. CALIBRATION AND UNCERTAINTY 6

4.1. MEASURING INSTRUMENT CALIBRATION 6

4.2. SAMPLE CALCULATION 6

4.3. MEASUREMENT UNCERTAINTY 7

5. EQUIPMENT UNDER TEST 8

5.1. DESCRIPTION OF EUT 8

5.2. MAXIMUM OUTPUT POWER 8

5.3. MAXIMUM OUTPUT POWER (LTE) 10

5.4. DESCRIPTION OF AVAILABLE ANTENNAS 14

5.5. DESCRIPTION OF TEST SETUP 15

6. TEST AND MEASUREMENT EQUIPMENT 18

7. Summary Table 19

8. RF POWER OUTPUT VERIFICATION 20

8.1. GSM/GPRS/EDGE 20

8.1.1. GSM OUTPUT POWER RESULT 21

8.2. UMTS REL 99 22

8.2.1. UMTS REL 99 OUTPUT POWER RESULT 22

8.3. UMTS HSDPA 23

8.3.1. UMTS HSDPA OUTPUT POWER RESULT 23

8.3.2. UMTS HSUPA 25

8.3.3. UMTS HSUPA OUTPUT POWER RESULT 26

8.4. CDMA2000 27

8.4.1. 1xRTT 27

8.4.1. CDMA2000 OUTPUT POWER RESULT 28

8.4.2. 1xEV-DO Release 0 29

8.4.1. 1XEVDO REL 0 OUTPUT POWER RESULT 30

8.4.1. 1xEV-DO Rev. A 31

This report shall not be reproduced except in full, without the written approval of UL Verification Services Inc.

8.4.2. 1xEVDO REV A OUTPUT RESULT 32

8.5. LTE OUTPUT VERIFICATION 33

8.5.1. LTE OUTPUT RESULT 33

9. RADIATED TEST RESULTS 38

9.1. RADIATED POWER (ERP & EIRP) 38

9.1.1. ERP/EIRP Results 38

9.1.2. CDMA ERP/EIRP Results 40

9.1.3. LTE ERP/EIRP Results 40

9.1.4. ERP/EIRP DATA 44

9.3. WPC Back cover test data 78

9.2. FIELD STRENGTH OF SPURIOUS RADIATION 91

9.2.1. SPURIOUS RADIATION DATA 92

10. SETUP PHOTOS 126

This report shall not be reproduced except in full, without the written approval of UL Verification Services Inc.

1. ATTESTATION OF TEST RESULTS

COMPANY NAME: LG ELECTRONICS MOBILECOMM U.S.A., INC.

EUT DESCRIPTION: GSM/CDMA/WCDMA/LTE Phone + Bluetooth, DTS/UNII a/b/g/n/ac and NFC.

MODEL: LGLS990, LG-LS990, LS990

SERIAL NUMBER: 17QZE (Radiated)

DATE TESTED: MAY 20 – JUNE 5, 2014

APPLICABLE STANDARDS	
STANDARD	**TEST RESULTS**
FCC PART 22H, 24E,27M AND 90S	PASS

UL Verification Services Inc. tested the above equipment in accordance with the requirements set forth in the above standards. All indications of Pass/Fail in this report are opinions expressed by UL Verification Services Inc. based on interpretations and/or observations of test results. Measurement Uncertainties were not taken into account and are published for informational purposes only. The test results show that the equipment tested is capable of demonstrating compliance with the requirements as documented in this report.

Note: The results documented in this report apply only to the tested sample, under the conditions and modes of operation as described herein. This document may not be altered or revised in any way unless done so by UL Verification Services Inc. and all revisions are duly noted in the revisions section. Any alteration of this document not carried out by UL Verification Services Inc. will constitute fraud and shall nullify the document. This report must not be used by the client to claim product certification, approval, or endorsement by NVLAP, NIST, any agency of the Federal Government, or any agency of any government.

Approved & Released For

UL Verification Services Inc. By:

PENG ZHANG

CONSUMER TECHNOLOGY DIVISION
PROJECT LEAD
UL Verification Services Inc.

Tested By:

CHARLES VERGONIO

CONSUMER TECHNOLOGY DIVISION
LAB ENGINEER
UL Verification Services Inc.

This report shall not be reproduced except in full, without the written approval of UL Verification Services Inc.

2. TEST METHODOLOGY

The tests documented in this report were performed in accordance with TIA-603-C, FCC CFR 47 Part 2, Part 22, Part 24, Part 27 and Part 90.

Test Procedure: Reference KDB 971168 D01 Power Meas License Digital Systems v02r01 6/7/2013

3. FACILITIES AND ACCREDITATION

The test sites and measurement facilities used to collect data are located at 47173 and 47266 Benicia Street, Fremont, California, USA. Line conducted emissions are measured only at the 47173 address. The following table identifies which facilities were utilized for radiated emission measurements documented in this report. Specific facilities are also identified in the test results sections.

47173 Benicia Street	47266 Benicia Street
☐ Chamber A	☐ Chamber D
☒ Chamber B	☐ Chamber E
☐ Chamber C	☒ Chamber F

UL Verification Services Inc. is accredited by NVLAP, Laboratory Code 200065-0. The full scope of accreditation can be viewed at http://ts.nist.gov/standards/scopes/2000650.htm.

4. CALIBRATION AND UNCERTAINTY

4.1. MEASURING INSTRUMENT CALIBRATION

The measuring equipment utilized to perform the tests documented in this report has been calibrated in accordance with the manufacturer's recommendations, and is traceable to recognized national standards

4.2. SAMPLE CALCULATION

Where relevant, the following sample calculation is provided:

EIRP = PSA reading with EUT worst orientation (dBm) + Path loss (dB) – cable loss(between the SG and substitution antenna) + Substitution Antenna Factor (dBi)

ERP = PSA reading with EUT worst orientation (dBm) + Path loss (dB) – cable loss(between the SG and substitution antenna)

This report shall not be reproduced except in full, without the written approval of UL Verification Services Inc.

(Path loss = Signal generator output – PSA reading with substitution antenna)

4.3. MEASUREMENT UNCERTAINTY

Where relevant, the following measurement uncertainty levels have been estimated for tests performed on the apparatus:

PARAMETER	UNCERTAINTY
Conducted Disturbance, 0.15 to 30 MHz	3.52 dB
Radiated Disturbance, 30 to 18000 MHz	4.94 dB

Uncertainty figures are valid to a confidence level of 95%.

This report shall not be reproduced except in full, without the written approval of UL Verification Services Inc.

5. EQUIPMENT UNDER TEST

5.1. DESCRIPTION OF EUT

The EUT is a GSM/CDMA/WCDMA/LTE Phone + Bluetooth, DTS/UNII a/b/g/n/ac and NFC.

5.2. MAXIMUM OUTPUT POWER

The transmitter has a maximum peak conducted and radiated ERP / EIRP output powers as follows:

FCC Part 22/24						
Band	Frequency Range(MHz)	Modulation	Conducted		Radiated	
		Peak	Peak (dBm)	Peak (mW)	Peak (dBm)	Peak (mW)
GSM850	824~849	GMSK	32.6	1819.70		
	824~849	GPRS	32.6	1819.70	28.741	748.34
	824~849	EGPRS	27.7	588.84	24.601	288.47
GSM1900	1850~1910	GMSK	30.2	1047.3		
	1850~1910	GPRS	30.1	1023.30	28.77	753.36
	1850~1910	EGPRS	26.1	407.38	24.52	283.14

This report shall not be reproduced except in full, without the written approval of UL Verification Services Inc.

FCC Part 22/24/90						
Band	Frequency Range(MHz)	Modulation Peak	Conducted		Radiated	
			Avg (dBm)	Avg (mW)	Avg (dBm)	Avg (mW)
Band 5	824~849	REL99	23.7	234.42	20.901	123.06
	824~849	HSDPA	23.7	234.42	20.741	118.6
	824~849	HSUPA	23.1	204.17		
Band 2	1850~1910	REL99	23.7	234.42	21.82	152.05
	1850~1910	HSDPA	23.7	234.42	21.71	148.25
	1850~1910	HSUPA	23.7	234.42		
BC10	816~824	1xRTT	25.2	331.13	22.75	188.36
	816~824	EVDO REL. 0	25.2	331.13	22.87	193.64
	816~824	EVDO REV. A	25.2	331.13		
BC0	824~849	1xRTT	25.5	354.81	21.03	126.76
	824~849	EVDO REL. 0	25.5	354.81	20.50	112.20
	824~849	EVDO REV. A	25.5	354.81		
BC1	1850~1910	1xRTT	24.7	295.12	23.08	203.23
	1850~1910	EVDO REL. 0	24.9	309.02	22.88	194.08
	1850~1910	EVDO REV. A	24.9	309.02		

UL VERIFICATION SERVICES INC. FORM NO: CCSUP4701I
47173 BENICIA STREET, FREMONT, CA 94538, USA TEL: (510) 771-1000 FAX: (510) 661-0888

This report shall not be reproduced except in full, without the written approval of UL Verification Services Inc.

5.3. MAXIMUM OUTPUT POWER (LTE)

The transmitter has a maximum peak conducted and radiated ERP/EIRP output powers as follows:

FCC Part 27							
Band	Frequency Range(MHz)	BandWidth (MHz)	Modulation	Conducted		Radiated	
			Peak	Avg (dBm)	Avg (mW)	Avg (dBm)	Avg (mW)
LTE41	2496~2690	20MHz	QPSK	24.2	263.02	22.87	193.64
	2496~2690	20MHz	16QAM	23.2	208.92	20.37	108.89

FCC Part 27							
Band	Frequency Range(MHz)	BandWidth (MHz)	Modulation	Conducted		Radiated	
			Peak	Avg (dBm)	Avg (mW)	Avg (dBm)	Avg (mW)
LTE41	2496~2690	15MHz	QPSK	24.2	263.02	22.13	163.31
	2496~2690	15MHz	16QAM	23.2	208.92	20.81	120.5

FCC Part 22/2 4/27							
Band	Frequency Range(MHz)	BandWidth (MHz)	Modulation	Conducted		Radiated	
			Peak	Avg (dBm)	Avg (mW)	Avg (dBm)	Avg (mW)
LTE41	2496~2690	10MHz	QPSK	24.2	263.02	22.55	179.89
	2496~2690	10MHz	16QAM	23.2	208.92	20.74	118.58

This report shall not be reproduced except in full, without the written approval of UL Verification Services Inc.

FCC Part 22							
Band	Frequency Range(MHz)	BandWidth (MHz)	Modulation	Conducted		Radiated	
			Peak	Avg (dBm)	Avg (mW)	Avg (dBm)	Avg (mW)
LTE26	824~849	10MHz	QPSK	23.7	234.42	19.8015	95.83
	824~849	10MHz	16QAM	22.7	186.20	18.851	76.75

FCC Part 90							
Band	Frequency Range(MHz)	BandWidth (MHz)	Modulation	Conducted		Radiated	
			Peak	Avg (dBm)	Avg (mW)	Avg (dBm)	Avg (mW)
LTE26	814~824	10MHz	QPSK	23.7	234.42	17.996	63.04
	814~824	10MHz	16QAM	22.7	186.20	19.146	82.15

FCC Part 22							
Band	Frequency Range(MHz)	BandWidth (MHz)	Modulation	Conducted		Radiated	
			Peak	Avg (dBm)	Avg (mW)	Avg (dBm)	Avg (mW)
LTE26	824~849	5MHz	QPSK	23.7	234.42	19.905	97.84
	824~849	5MHz	16QAM	22.7	186.20	18.915	77.89

FCC Part 90							
Band	Frequency Range(MHz)	BandWidth (MHz)	Modulation	Conducted		Radiated	
			Peak	Avg (dBm)	Avg (mW)	Avg (dBm)	Avg (mW)
LTE26	814~824	5MHz	QPSK	23.7	234.42	20.406	109.8
	814~824	5MHz	16QAM	22.7	186.20	19.266	84.45

FCC Part 22							
Band	Frequency Range(MHz)	BandWidth (MHz)	Modulation	Conducted		Radiated	
			Peak	Avg (dBm)	Avg (mW)	Avg (dBm)	Avg (mW)
LTE26	814~849	3MHz	QPSK	23.7	234.42	18.931	78.18
	814~849	3MHz	16QAM	22.7	186.20	18.081	64.28

This report shall not be reproduced except in full, without the written approval of UL Verification Services Inc.

FCC Part 90							
Band	Frequency Range(MHz)	BandWidth (MHz)	Modulation	Conducted		Radiated	
			Peak	Avg (dBm)	Avg (mW)	Avg (dBm)	Avg (mW)
LTE26	814~824	3MHz	QPSK	23.7	234.42	20.506	112.36
	814~824	3MHz	16QAM	22.7	186.20	19.436	87.82

FCC Part 22							
Band	Frequency Range(MHz)	BandWidth (MHz)	Modulation	Conducted		Radiated	
			Peak	Avg (dBm)	Avg (mW)	Avg (dBm)	Avg (mW)
LTE26	824~849	1.4MHz	QPSK	23.7	234.42	19.275	84.63
	824~849	1.4MHz	16QAM	22.7	186.20	18.175	65.69

FCC Part 90							
Band	Frequency Range(MHz)	BandWidth (MHz)	Modulation	Conducted		Radiated	
			Peak	Avg (dBm)	Avg (mW)	Avg (dBm)	Avg (mW)
LTE26	814~824	1.4MHz	QPSK	23.7	234.42	18.036	63.62
	814~824	1.4MHz	16QAM	22.7	186.20	17.486	56.05

FCC Part 22/2 4/27							
Band	Frequency Range(MHz)	BandWidth (MHz)	Modulation	Conducted		Radiated	
			Peak	Avg (dBm)	Avg (mW)	Avg (dBm)	Avg (mW)
LTE25	1850~1915	10MHz	QPSK	23.7	234.42	22.68	185.35
	1850~1915	10MHz	16QAM	22.7	186.20	21.31	135.21

FCC Part 22/2 4/27							
Band	Frequency Range(MHz)	BandWidth (MHz)	Modulation	Conducted		Radiated	
			Peak	Avg (dBm)	Avg (mW)	Avg (dBm)	Avg (mW)
LTE25	1850~1915	5MHz	QPSK	23.7	234.42	22.79	190.11
	1850~1915	5MHz	16QAM	22.5	177.82	21.28	134.28

This report shall not be reproduced except in full, without the written approval of UL Verification Services Inc.

FCC Part 22/2 4/27							
Band	Frequency Range(MHz)	BandWidth (MHz)	Modulation	Conducted		Radiated	
			Peak	Avg (dBm)	Avg (mW)	Avg (dBm)	Avg (mW)
LTE25	1850~1915	3MHz	QPSK	23.7	234.42	22.9	194.98
	1850~1915	3MHz	16QAM	22.7	186.20	21.88	154.17

UL VERIFICATION SERVICES INC. FORM NO: CCSUP4701I
47173 BENICIA STREET, FREMONT, CA 94538, USA TEL: (510) 771-1000 FAX: (510) 661-0888

This report shall not be reproduced except in full, without the written approval of UL Verification Services Inc.

5.4. DESCRIPTION OF AVAILABLE ANTENNAS

The radio utilizes a PIFA antenna for the [List the bands supported] with a maximum peak gain as follow:

Frequency (MHz)	Peak Gain (dBi)
Band 5, 824~849MHz	
Band 2, 1850~1910MHz	
LTE25, 1850~1915MHz	
LTE26, 814~849MHz	
LTE41, 2496~2690MHz	

This report shall not be reproduced except in full, without the written approval of UL Verification Services Inc.

5.5. DESCRIPTION OF TEST SETUP

SUPPORT EQUIPMENT

Support Equipment List				
Description	Manufacturer	Model	Serial Number	FCC ID
AC Adapter	LG	MCS-04WT2	TA350000050	N/A
Earphone	LG	N/A	N/A	N/A
WPC Back Cover	LG	N/A	N/A	N/A
WPC Charger	LG	WPC-300	304HYBF00069	BEJWCP300

I/O CABLES (CONDUCTED SETUP)

I/O Cable List						
Cable No	Port	# of identical ports	Connector Type	Cable Type	Cable Length (m)	Remarks
1	RF Out	1	Spectrum Analyzer	Shielded	None	NA
2	Antenna Port	1	EUT	Shielded	0.1m	NA
3	RF In/Out	1	Communication Test Set	Shielded	1m	NA

I/O CABLES (RADIATED SETUP)

I/O CABLE LIST						
Cable No.	Port	# of Identical Ports	Connector Type	Cable Type	Cable Length	Remarks
1	USB	1	AC Adapter	Un-shielded	1.2m	No
2	Jack	1	Headset	Shielded	1m	No
3	RF In/out	1	Communication Test Set	Un-shielded	2m	Yes

TEST SETUP

The EUT is continuously communicated to the call box during the tests.

This report shall not be reproduced except in full, without the written approval of UL Verification Services Inc.

SETUP DIAGRAM FOR TESTS (CONDUCTED TEST SETUP)

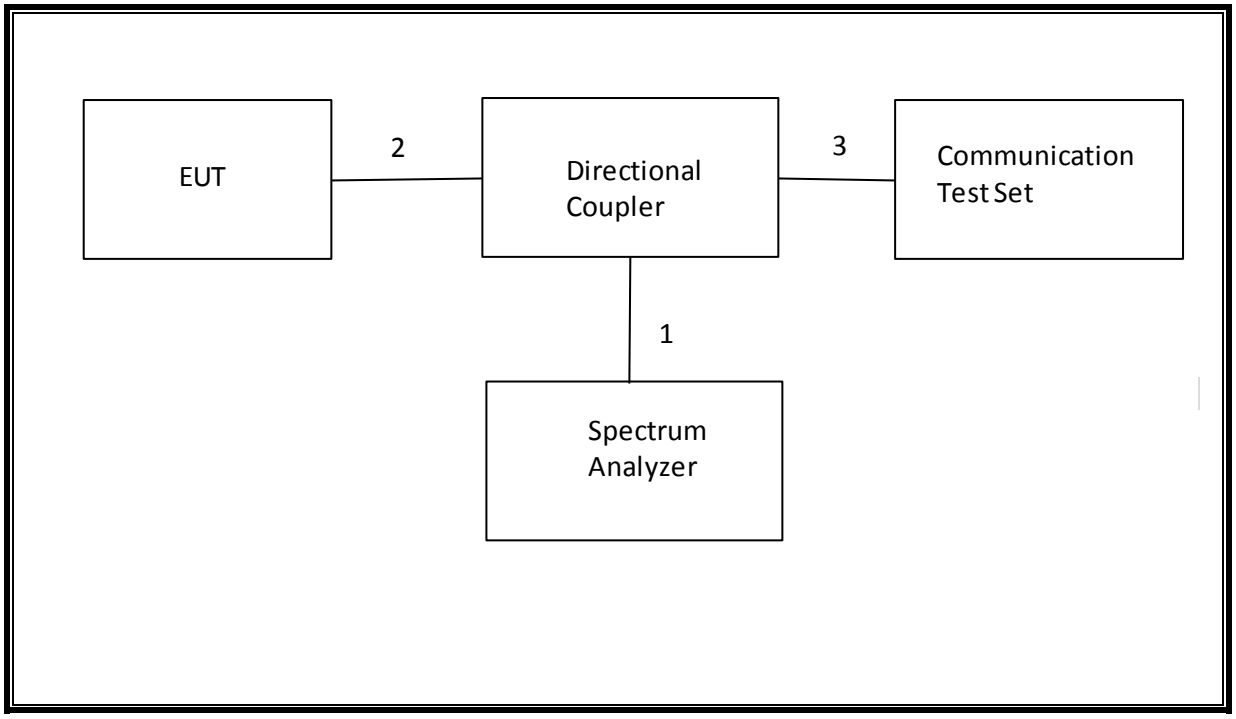

This report shall not be reproduced except in full, without the written approval of UL Verification Services Inc.

SETUP DIAGRAM FOR TESTS (RADIATED TEST SETUP)

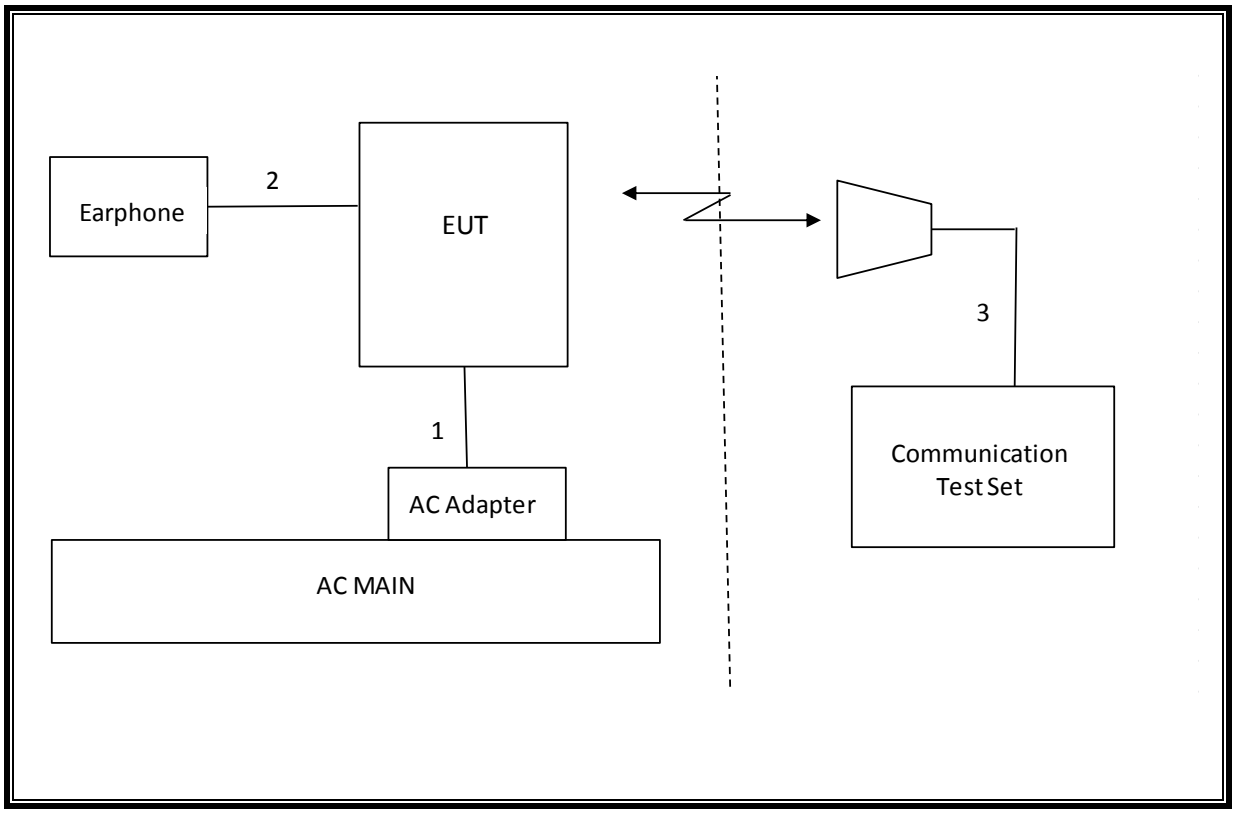

UL VERIFICATION SERVICES INC. FORM NO: CCSUP4701I
47173 BENICIA STREET, FREMONT, CA 94538, USA TEL: (510) 771-1000 FAX: (510) 661-0888

This report shall not be reproduced except in full, without the written approval of UL Verification Services Inc.

6. TEST AND MEASUREMENT EQUIPMENT

The following test and measurement equipment was utilized for the tests documented in this report:

TEST EQUIPMENT LIST				
Description	**Manufacturer**	**Model**	**Asset**	**Cal Due**
Spectrum Analyzer, 44 GHz	Agilent / HP	E4446A	C01179	02/26/15
Antenna, Bilog, 2 GHz	Sunol Sciences	JB1	C01011	08/14/14
Antenna, Horn, 18 GHz	EMCO	3115	C00783	10/25/14
Antenna, Horn, 18 GHz	EMCO	3115	C00784	09/25/14
Highpass Filter, 2.7 GHz	Micro-Tronics	HPM13194	N02687	CNR
Highpass Filter, 1.5 GHz	Micro-Tronics	HPM13193	N02688	CNR
Temperature / Humidity Chamber	Thermotron	SE 600-10-10	C00930	01/09/15
Communications Test Set	R&S	CMW500	T159	07/02/14
DC power supply, 8 V @ 3 A or 15 V	Agilent / HP	E3610A	None	CNR
Vector signal generator, 6 GHz	Agilent / HP	E4438C	None	07/06/14
Antenna, Tuned Dipole 400~1000	ETS	3121C DB4	C00993	02/14/15
Antenna, Horn, 25.5 GHz	ARA	MWH-1826/B	C00980	11/14/14
Directional Coupler	RF-Lambda	RFDC5M06G15	None	CNR
Antenna, Horn, 26.5 GHz	ARA	MWH-1826/B	C00980	11/14/14

This report shall not be reproduced except in full, without the written approval of UL Verification Services Inc.

7. Summary Table

FCC Part Section	RSS Section(s)	Test Description	Test Limit	Test Condition	Test Result	Worst Case
22.917(a) 24.238(a)	N/A	Occupied Band width (99%)	N/A	Conducted	Pass	see original
22.917(a) 24.238(a) 27.53(g) 90.691	RSS-132(4.5.1) RSS-133(6.5.1) RSS-139(6.5.1)	Band Edge / Conducted Spurious Emission	-13dBm		Pass	see original
2.1046	N/A	Conducted output power	N/A		Pass	32.6dBm
27.53(g) 90.691	RSS-139(6.5.1)	Emission Mask	-13dBm		Pass	see original
22.355 24.235 27.54	RSS-132(4.3) RSS-133(6.3) RSS-139(6.3)	Frequency Stability	2.5PPM		Pass	see original
22.913(a)(2)	RSS-132(4.4)	Effective Radiated Power	38 dBm		Pass	28.74dBm
90.635			50dBm	Radiated	Pass	20.406dBm
24.232(c)	RSS-133(6.4) RSS-139(6.4)	Equivalent Isotropic Radiated Power	33dBm		Pass	28.77dBm
22.917(a) 24.238(a) 27.53(g)	RSS-132(4.5.1) RSS-133(6.5.1) RSS-139(6.5.1)	Radiated Spurious Emission	-13dBm		Pass	-21.5dBm

This report shall not be reproduced except in full, without the written approval of UL Verification Services Inc.

8. RF POWER OUTPUT VERIFICATION

8.1. GSM/GPRS/EDGE

Function: Menu select > GSM Mobile Station > GSM 850/900/1800/1900

Press Connection control to choose the different menus

Press RESET > choose all to reset all settings

Connection Press Signal Off to turn off the signal and change settings

Network Support > GSM+GPRS or GSM+EGPRS

Main Service > Packet Data

Service selection > Test Mode A – Auto Slot Config. off

MS Signal Press Slot Config bottom on the right twice to select and change the number of time slots and power setting

> Slot configuration > Uplink/Gamma

> 33 dBm for GPRS 850/900

> 30 dBm for GPRS1800/1900

BS Signal Enter the same channel number for TCH channel (test channel) and BCCH channel

Frequency Offset > + 0 Hz

Mode > BCCH and TCH

BCCH Level > -85 dBm (May need to adjust if link is not stable)

BCCH Channel > choose desire test channel [Enter the same channel number for TCH channel (test channel) and BCCH channel]

Channel Type > Off

P0> 4 dB

Slot Config > Unchanged (if already set under MS Signal)

TCH > choose desired test channel

Hopping > Off

Main Timeslot > 3 (Default)

Network Coding Scheme > CS4 (GPRS) and MCS5 ~ MCS9 (EGPRS)

Bit Stream > 2E9-1PSR Bit Pattern

AF/RF Enter appropriate offsets for Ext. Att. Output and Ext. Att. Input

Connection Press Signal On to turn on the signal and change settings

UL VERIFICATION SERVICES INC. FORM NO: CCSUP4701I

47173 BENICIA STREET, FREMONT, CA 94538, USA TEL: (510) 771-1000 FAX: (510) 661-0888

This report shall not be reproduced except in full, without the written approval of UL Verification Services Inc.

8.1.1. GSM OUTPUT POWER RESULT

Mode	Coding Scheme	Time Slots	Ch No.	Freq. (MHz)	Burst Pwr (dBm)
GSM (Voice)	CS1	1	128	824.2	32.6
			190	836.6	32.6
			251	848.8	32.6
GPRS (GMSK)	CS1	1	128	824.2	32.6
			190	836.6	32.6
			251	848.8	32.6
		2	128	824.2	31.5
			190	836.6	31.5
			251	848.8	31.5
EGPRS (8PSK)	MCS5	1	128	824.2	27.6
			190	836.6	27.6
			251	848.8	27.7
		2	128	824.2	27.4
			190	836.6	27.4
			251	848.8	27.5

Mode	Coding Scheme	Time Slots	Ch No.	Freq. (MHz)	Burst Pwr (dBm)
GSM (Voice)	CS1	1	512	1850.2	30.2
			661	1880.0	30.1
			810	1909.8	30.1
GPRS (GMSK)	CS1	1	512	1850.2	30.1
			661	1880.0	30.0
			810	1909.8	30.1
		2	512	1850.2	28.7
			661	1880.0	28.7
			810	1909.8	28.7
EGPRS (8PSK)	MCS5	1	512	1850.2	26.1
			661	1880.0	26.0
			810	1909.8	26.0
		2	512	1850.2	26.0
			661	1880.0	25.9
			810	1909.8	26.0

This report shall not be reproduced except in full, without the written approval of UL Verification Services Inc.

8.2. UMTS REL 99

TEST PROCEDURE

The following summary of these settings are illustrated below:

	Mode	Rel99
	Subtest	-
WCDMA General Settings	Loopback Mode	Test Mode 1
	Rel99 RMC	12.2kbps RMC
	HSDPA FRC	Not Applicable
	HSUPA Test	Not Applicable
	Power Control Algorithm	Algorithm2
	βc	Not Applicable
	βd	Not Applicable
	βec	Not Applicable
	βc/βd	8/15
	βhs	Not Applicable
	βed	Not Applicable

8.2.1. UMTS REL 99 OUTPUT POWER RESULT

Band	Mode	Ch.	f(MHz)	Conducted Power (dBm) Avg (dBm)
Band 5	REL99	4132	826.4	23.5
		4183	836.6	23.7
		4233	846.6	23.7
Band 2	REL99	9262	1852.4	23.7
		9400	1880	23.7
		9538	1907.6	23.7

This report shall not be reproduced except in full, without the written approval of UL Verification Services Inc.

8.3. UMTS HSDPA

The following 4 Sub-tests were completed according to Release 5 procedures in section 5.2 of 3GPP TS34.121. A summary of these settings are illustrated below:

	Mode	Rel5 HSDPA			
	Subtest	1	2	3	4
WCDMA General Settings	Loopback Mode	Test Mode 1			
	Rel99 RMC	12.2kbps RMC			
	HSDPA FRC	H-Set1			
	Power Control Algorithm	Algorithm 2			
	βc	2/15	12/15	15/15	15/15
	βd	15/15	15/15	8/15	4/15
	Bd (SF)	64			
	βc/βd	2/15	12/15	15/8	15/4
	βhs	4/15	24/15	30/15	30/15
	MPR (dB)	0	0	0.5	0.5
HSDPA Specific Settings	D_{ACK}	8			
	D_{NAK}	8			
	DCQI	8			
	Ack-Nack repetition factor	3			
	CQI Feedback (Table 5.2B.4)	4ms			
	CQI Repetition Factor (Table 5.2B.4)	2			
	Ahs =βhs/βc	30/15			

8.3.1. UMTS HSDPA OUTPUT POWER RESULT

Band	Mode	Subset	Ch.	f(MHz)	Conducted Power (dBm) Avg (dBm)
Band 5	HSDPA	1	4132	826.4	23.6
			4183	836.6	23.7
			4233	846.6	23.7
		2	4132	826.4	23.7
			4183	836.6	23.7
			4233	846.6	23.7
		3	4132	826.4	23.2
			4183	836.6	23.2
			4233	846.6	23.2
		4	4132	826.4	23.2
			4183	836.6	23.2
			4233	846.6	23.2
Band 2	HSDPA	1	9262	1852.4	23.7

This report shall not be reproduced except in full, without the written approval of UL Verification Services Inc.

			9400	1880	23.7
			9538	1907.6	23.6
		2	9262	1852.4	23.7
			9400	1880	23.7
			9538	1907.6	23.6
		3	9262	1852.4	23.2
			9400	1880	23.2
			9538	1907.6	23.2
		4	9262	1852.4	23.2
			9400	1880	23.2
			9538	1907.6	23.2

This report shall not be reproduced except in full, without the written approval of UL Verification Services Inc.

8.3.2. UMTS HSUPA

TEST PROCEDURE

The following summary of these settings are illustrated below: (ETSI TS 134.121-1 Table C.11.1)

	Mode	Rel6 HSUPA	Rel6 HSUPA	Rel6 HSUPA	Rel6 HSUPA	Rel6 HSUPA
	Subtest	1	2	3	4	5
WCDMA General Settings	Loopback Mode	Test Mode 1				
	P-CPICH (dB)	-10				
	P-CCPCH (dB)	-12				
	SCH (dB)	-12				
	PICH(dB)	-15				
	DPCH (dB)	-9				
	HS-SCCH_1 (dB)	-8				
	HS-PDSCH (dB)	-3				
	Rel99 RMC	12.2kbps RMC				
	HSDPA FRC	H-Set1				
	HSUPA Test	HSUPA Loopback				
	Power Control Algorithm	Algorithm2				
	Bc	11/15	6/15	15/15	2/15	15/15
	Bd	15/15	15/15	9/15	15/15	15/15
	Bec	209/225	12/15	30/15	2/15	5/15
	βc/βd	11/15	6/15	15/9	2/15	15/15
	Bhs	22/15	12/15	30/15	4/15	30/15
	βed (note1)	1309/225	94/75	47/15 47/15	56/75	134/15
	MPR	0	2	1	2	0
HSDPA Specific Settings	DACK	8				
	DNAK	8				
	DCQI	8				
	Ack-Nack repetition factor	3				
	CQI Feedback (Table 5.2B.4)	4ms				
	CQI Repetition Factor (Table 5.2B.4)	2				
	Ahs = βhs/βc	30/15				
HSUPA Specific Settings	D E-DPCCH	6	8	8	5	7
	DHARQ	0	0	0	0	0
	AG Index	20	12	15	17	21
	Reference E-TFCIs	5	5	2	5	5
	ETFCI (from 34.121 Table C.11.1.3)	75	67	92	71	81
	Associated Max UL Data Rate kbps	242.1	174.9	482.8	205.8	308.9
	Reference E_TFCIs	E-TFCI 11 E-TFCI PO 4 E-TFCI 67 E-TFCI PO 18 E-TFCI 71 E-TFCI PO 23 E-TFCI 75 E-TFCI PO 26 E-TFCI 81 E-TFCI PO 27		E-TFCI 11 E-TFCI PO 4 E-TFCI 92 E-TFCI PO 18	E-TFCI 11 E-TFCI PO 4 E-TFCI 67 E-TFCI PO 18 E-TFCI 71 E-TFCI PO 23 E-TFCI 75 E-TFCI PO 26 E-TFCI 81 E-TFCI PO 27	

Note1: βed cannot be set directly, it is set by Absolute Grant Value.

This report shall not be reproduced except in full, without the written approval of UL Verification Services Inc.

8.3.3. UMTS HSUPA OUTPUT POWER RESULT

Band	Mode	Subset	Ch.	f(MHz)	Conducted Power (dBm) Avg (dBm)
Band 5	HSUPA	1	4132	826.4	23.1
			4183	836.6	22.9
			4233	846.6	22.9
		2	4132	826.4	22.1
			4183	836.6	22.2
			4233	846.6	22.1
		3	4132	826.4	22.5
			4183	836.6	22.4
			4233	846.6	22.4
		4	4132	826.4	22.4
			4183	836.6	22.5
			4233	846.6	22.4
		5	4132	826.4	23.7
			4183	836.6	23.7
			4233	846.6	23.7
Band 2	HSUPA	1	9262	1852.4	23.5
			9400	1880	23.7
			9538	1907.6	23.6
		2	9262	1852.4	21.7
			9400	1880	21.7
			9538	1907.6	21.7
		3	9262	1852.4	22.4
			9400	1880	22.7
			9538	1907.6	22.5
		4	9262	1852.4	21.7
			9400	1880	22.6
			9538	1907.6	22.5
		5	9262	1852.4	23.7
			9400	1880	23.7
			9538	1907.6	23.6

This report shall not be reproduced except in full, without the written approval of UL Verification Services Inc.

8.4. CDMA2000

8.4.1. 1xRTT

TEST PROCEDURE

This procedure assumes the Agilest 8960 Test Set has the following applications installed and with valid license.

Application	Rev, License
CDMA2000 Mobile Test	B.13.08, L

- Call Setup > Shift & Preset
- Cell Info > Cell Parameters > System ID (SID) > 7
  > Network ID (NID) > 1
- Protocol Rev > 6 (IS-2000-0)
- Radio Config (RC) > Please see following table or details
- FCH Service Option (SO) Setup > Please see following table or details
- Traffic Data Rate > Full
- TDSO SCH Info > F-SCH Parameters > F-SCH Data Rate > 153.6 kbps
  > R-SCH Parameters > R-SCH Data Rate > 153.6 kbps
- Rvs Power Ctrl > Active bits
  - Rvs Power Ctrl > All Up bits (Maximum TxPout)

This report shall not be reproduced except in full, without the written approval of UL Verification Services Inc.

8.4.1. CDMA2000 OUTPUT POWER RESULT

1xRTT

Band	Mode	Ch	Freq. (MHz)	Avg Pwr (dBm)
BC0	RC1, SO55 (Loopback)	1013	824.70	25.5
		384	836.52	25.5
		777	848.31	25.4
	RC3, SO55 (Loopback)	1013	824.70	25.5
		384	836.52	25.5
		777	848.31	25.4
	RC3, SO32 (+F-SCH)	1013	824.70	25.5
		384	836.52	25.4
		777	848.31	25.4

Band	Mode	Ch	Freq. (MHz)	Avg Pwr (dBm)
BC1	RC1, SO55 (Loopback)	25	1851.25	24.6
		600	1880.00	24.7
		1175	1908.75	24.6
	RC3, SO55 (Loopback)	25	1851.25	24.6
		600	1880.00	24.6
		1175	1908.75	24.6
	RC3, SO32 (+F-SCH)	25	1851.25	24.6
		600	1880.00	24.7
		1175	1908.75	24.6

Band	Mode	Ch	Freq. (MHz)	Avg Pwr (dBm)
BC10	RC1, SO55 (Loopback)	476	817.90	25.2
		580	820.50	25.2
		684	823.10	25.2
	RC3, SO55 (Loopback)	476	817.90	25.2
		580	820.50	25.2
		684	823.10	25.2
	RC3, SO32 (+F-SCH)	476	817.90	25.2
		580	820.50	25.2
		684	823.10	25.2

This report shall not be reproduced except in full, without the written approval of UL Verification Services Inc.

8.4.2. 1xEV-DO Release 0

TEST PROCEDURE

This procedure assumes the Agilent 8960 Test Set has the following applications installed and with valid license.

Application	Rev, License
1xEV-DO Terminal Test	A.09.13

EVDO Release 0 - RTAP

- Call Setup > Shift & Preset
- Call Control:
  - Access Network Info > Cell Parameters > Sector ID > 00000000 > Subnet Mask > 0
  - Generator Info > Termination Parameters > Max Forward Packet Duration > 16 Slots
- Call Parms:
  - Cell Power > -105.5 dBm/1.23 MHz
  - Cell Band > (Select US Cellular or US PCS)
  - Channel > (Enter channel number)
  - Application Config > Enhanced Test Application Protocol > RTAP
  - RTAP Rate > 153.6 kbps
  - Rvs Power Ctrl > Active bits
  - Protocol Rel > 0 (1xEV-DO)
- Press “Start Data Connection” when “Session Open” appear in “Active Cell”
- Rvs Power Ctrl > All Up bits (Maximum TxPout)

EVDO Release 0 - FTAP

- Call Setup > Shift & Preset
- Call Control:
  - Access Network Info > Cell Parameters > Sector ID > 00000000 > Subnet Mask > 0
  - Generator Info > Termination Parameters > Max Forward Packet Duration > 16 Slots
- Call Parms:
  - Cell Power > -105.5 dBm/1.23 MHz
  - Cell Band > (Select US Cellular or US PCS)
  - Channel > (Enter channel number)
  - Application Config > Enhanced Test Application Protocol > FTAP (default)
  - FTAP Rate > 307.2 kbps (2 Slot, QPSK)
  - Rvs Power Ctrl > Active bits
  - Protocol Rel > 0 (1xEV-DO)
- Press “Start Data Connection” when “Session Open” appear in “Active Cell”
- Rvs Power Ctrl > All Up bits (Maximum TxPout)

This report shall not be reproduced except in full, without the written approval of UL Verification Services Inc.

8.4.1. 1XEVDO REL 0 OUTPUT POWER RESULT

1xEv-Do Rel. 0

Band	FTAP Rate	Channel	f (MHz)	Avg Pwr (dBm)
BC0	307.2 kbps (2 slot, QPSK)	1013	824.70	25.5
		384	836.52	25.5
		777	848.31	25.5

Band	FTAP Rate	Channel	f (MHz)	Avg Pwr (dBm)
BC1	307.2 kbps (2 slot, QPSK)	25	1851.25	24.9
		600	1880.00	24.9
		1175	1908.75	24.9

Band	FTAP Rate	Channel	f (MHz)	Avg Pwr (dBm)
BC10	307.2 kbps (2 slot, QPSK)	476	817.90	25.2
		580	820.50	25.2
		684	823.10	25.2

UL VERIFICATION SERVICES INC. FORM NO: CCSUP4701I
47173 BENICIA STREET, FREMONT, CA 94538, USA TEL: (510) 771-1000 FAX: (510) 661-0888

This report shall not be reproduced except in full, without the written approval of UL Verification Services Inc.

8.4.1. 1xEV-DO Rev. A

TEST PROCEDURE

This procedure assumes the Agilent 8960 Test Set has the following applications installed and with valid license.

Application	Rev, License
1xEV-DO Terminal Test	A.09.13

EVDO Release A – RETAP

- Call Setup > Shift & Preset
- Cell Power > -60 dBm/1.23 MHz
- Protocol Rev > A (1xEV-DO-A)
- Application Config > Enhanced Test Application Protocol > RETAP
- R-Data Pkt Size > 4096
- Protocol Subtype Config > Release A Physical Layer Subtype > Subtype 2

> PL Subtype 2 Access Channel MAC Subtype > Default (Subtype 0)

- Access Network Info > Cell Parameters > Sector ID > 00000000 > Subnet Mask > 0
- Generator Info > Termination Parameters > Max Forward Packet Duration >16 Slots > ACK R-Data After > Subpacket 0 (All ACK)
- Rvs Power Ctrl > All Up bits (to get the maximum power)

EVDO Release A - FETAP

- Call Setup > Shift & Preset
- Cell Power > -60 dBm/1.23 MHz
- Protocol Rev > A (1xEV-DO-A)
- Application Config > Enhanced Test Application Protocol > FETAP
- F-Traffic Format > 4 (1024, 2,128) Canonical (307.2k, QPSK)
- Protocol Subtype Config > Release A Physical Layer Subtype > Subtype 2

> PL Subtype 2 Access Channel MAC Subtype > Default (Subtype 0)

- Access Network Info > Cell Parameters > Sector ID > 00000000 > Subnet Mask > 0
- Generator Info > Termination Parameters > Max Forward Packet Duration >16 Slots > ACK R-Data After > Subpacket 0 (All ACK)
- Rvs Power Ctrl > All Up bits (to get the maximum power)

This report shall not be reproduced except in full, without the written approval of UL Verification Services Inc.

8.4.2. 1xEVDO REV A OUTPUT RESULT

1xEv-Do Rev. A

Band	FETAP Traffic Format	Channel	f (MHz)	Avg Pwr (dBm)
BC0	307.2k, QPSK/ ACK channel is transmitted at all the slots	1013	824.70	25.5
		384	836.52	25.5
		777	848.31	25.5

Band	FETAP Traffic Format	Channel	f (MHz)	Avg Pwr (dBm)
BC1	307.2k, QPSK/ ACK channel is transmitted at all the slots	25	1851.25	24.9
		600	1880.00	24.9
		1175	1908.75	24.9

Band	FETAP Traffic Format	Channel	f (MHz)	Avg Pwr (dBm)
BC10	307.2k, QPSK/ ACK channel is transmitted at all the slots	476	817.90	25.2
		580	820.50	25.2
		684	823.10	25.2

This report shall not be reproduced except in full, without the written approval of UL Verification Services Inc.

8.5. LTE OUTPUT VERIFICATION

8.5.1. LTE OUTPUT RESULT

Band	BW (MHz)	Mode	RB Allocation	RB offset	Target MPR	Avg Pwr (dBm)		
						26090	26365	26640
						1855 MHz	1882.5 MHz	1910 MHz
LTE Band 25	10	QPSK	1	0	0	23.5	**23.7**	23.5
			1	25	0	23.6	23.5	23.5
			1	49	0	**23.7**	23.6	**23.6**
			25	0	1	**22.7**	22.4	**22.6**
			25	12	1	22.7	22.4	22.6
			25	25	1	22.7	**22.7**	22.6
			50	0	1	22.4	22.5	**22.6**
		16QAM	1	0	1	22.3	22.7	22.2
			1	25	1	22.4	22.0	22.2
			1	49	1	22.4	22.7	22.3
			25	0	2	21.6	21.7	21.6
			25	12	2	21.6	21.7	21.6
			25	25	2	21.6	21.6	21.6
			50	0	2	21.6	21.7	21.5

Band	BW (MHz)	Mode	RB Allocation	RB offset	Target MPR	Avg Pwr (dBm)		
						26065	26365	26665
						1852.5 MHz	1882.5 MHz	1912.5 MHz
LTE Band 25	5	QPSK	1	0	0	23.5	23.6	23.6
			1	12	0	23.7	23.7	23.7
			1	24	0	23.7	23.6	23.5
			12	0	1	22.6	22.4	22.5
			12	7	1	22.7	22.7	22.6
			12	13	1	22.7	22.7	22.7
			25	0	1	22.7	22.7	22.6
		16QAM	1	0	1	22.2	22.3	22.3
			1	12	1	22.3	22.3	22.4
			1	24	1	22.4	22.4	22.5
			12	0	2	21.6	21.7	21.5
			12	7	2	21.6	21.7	21.5
			12	13	2	21.7	21.6	21.6
			25	0	2	21.7	21.4	21.5

Band	BW (MHz)	Mode	RB Allocation	RB offset	Target MPR	Avg Pwr (dBm)		
						26055	26365	26675
						1851.5 MHz	1882.5 MHz	1913.5 MHz
LTE Band 25	3	QPSK	1	0	0	23.6	23.6	23.6
			1	8	0	23.5	23.7	23.6

This report shall not be reproduced except in full, without the written approval of UL Verification Services Inc.

			1	14	0	23.7	23.7	23.7
			8	0	1	22.7	22.5	22.3
			8	4	1	22.7	22.5	22.3
			8	7	1	22.7	22.3	22.4
			15	0	1	22.7	22.4	22.4
		16QAM	1	0	1	22.3	22.1	22.3
			1	8	1	22.3	22.0	22.4
			1	14	1	22.4	22.7	22.4
			8	0	2	21.6	21.5	21.7
			8	4	2	21.6	21.5	21.7
			8	7	2	21.6	21.5	21.7
			15	0	2	21.6	21.3	21.7

Band	BW (MHz)	Mode	RB Allocation	RB offset	Target MPR	Avg Pwr (dBm)		
						26740	26865	26990
						819 MHz	831.5 MHz	844 MHz
LTE Band 26	10	QPSK	1	0	0	**23.7**	**23.7**	**23.7**
			1	25	0	23.7	23.6	23.7
			1	49	0	23.7	23.6	23.7
			25	0	1	**22.5**	**22.7**	**22.5**
			25	12	1	22.4	22.7	22.4
			25	25	1	22.4	22.5	22.4
			50	0	1	22.5	**22.7**	22.5
		16QAM	1	0	1	22.5	22.7	22.4
			1	25	1	22.5	22.7	22.4
			1	49	1	22.5	22.1	22.3
			25	0	2	21.7	21.7	21.3
			25	12	2	21.7	21.7	21.3
			25	25	2	21.7	21.3	21.2
			50	0	2	21.7	21.7	21.4
Band	BW (MHz)	Mode	RB Allocation	RB offset	Target MPR	Avg Pwr (dBm)		
						26715	26865	27015
						816.5 MHz	831.5 MHz	846.5 MHz
LTE Band 26	5	QPSK	1	0	0	23.4	23.4	23.6
			1	12	0	23.4	23.7	23.7
			1	24	0	23.7	23.5	23.5
			12	0	1	22.4	22.4	22.5
			12	7	1	22.4	22.3	22.4
			12	13	1	22.3	22.7	22.4
			25	0	1	22.4	22.4	22.4
		16QAM	1	0	1	22.4	22.5	22.2
			1	12	1	22.4	22.5	22.2
			1	24	1	22.5	22.7	22.2

This report shall not be reproduced except in full, without the written approval of UL Verification Services Inc.

			12	0	2	21.2	21.7	21.7
			12	7	2	21.3	21.7	21.7
			12	13	2	21.3	21.7	21.7
			25	0	2	21.4	21.7	21.6
Band	BW (MHz)	Mode	RB Allocation	RB offset	Target MPR	Avg Pwr (dBm)		
						26705	26865	27025
						815.5 MHz	831.5 MHz	847.5 MHz
LTE Band 26	3	QPSK	1	0	0	23.6	23.5	23.7
			1	8	0	23.7	23.7	23.6
			1	14	0	23.6	23.5	23.7
			8	0	1	22.3	22.4	22.4
			8	4	1	22.4	22.3	22.4
			8	7	1	22.4	22.5	22.3
			15	0	1	22.4	22.4	22.4
		16QAM	1	0	1	22.5	22.0	22.5
			1	8	1	22.5	22.7	22.4
			1	14	1	22.5	22.1	22.4
			8	0	2	21.3	21.5	21.7
			8	4	2	21.2	21.5	21.7
			8	7	2	21.2	21.5	21.7
			15	0	2	21.7	21.7	21.7
Band	BW (MHz)	Mode	RB Allocation	RB offset	Target MPR	Avg Pwr (dBm)		
						26697	26865	27033
						814.7 MHz	831.5 MHz	848.3 MHz
LTE Band 26	1.4	QPSK	1	0	0	23.5	23.7	23.7
			1	3	0	23.5	23.7	23.7
			1	5	0	23.5	23.5	23.5
			3	0	0	23.7	23.7	23.7
			3	1	0	23.7	23.7	23.7
			3	3	0	23.7	23.7	23.7
			6	0	1	22.5	22.4	22.6
		16QAM	1	0	1	22.7	22.3	22.6
			1	3	1	22.6	22.3	22.6
			1	5	1	22.7	22.6	22.6
			3	0	1	22.6	22.7	22.5
			3	1	1	22.5	22.7	22.5
			3	3	1	22.6	22.7	22.5
			6	0	2	21.3	21.3	21.4

This report shall not be reproduced except in full, without the written approval of UL Verification Services Inc.

Band	BW (MHz)	Mode	RB Allocation	RB offset	Target MPR	Avg Pwr (dBm)		
						39750	40620	41490
						2506 MHz	2593 MHz	2680 MHz
LTE Band 41	20	QPSK	1	0	0	24.2	24.2	24.2
			1	49	0	24.2	24.1	24.2
			1	99	0	24.2	24.0	24.1
			50	0	1	23.2	23.2	23.0
			50	24	1	23.2	23.2	23.0
			50	50	1	23.2	23.1	23.2
			100	0	1	23.2	23.2	23.0
		16QAM	1	0	1	23.1	22.7	23.2
			1	49	1	23.0	22.7	23.2
			1	99	1	23.1	22.5	23.2
			50	0	2	22.2	22.1	22.2
			50	24	2	22.2	22.1	22.0
			50	50	2	22.2	22.1	22.2
			100	0	2	22.2	22.2	22.1
Band	BW (MHz)	Mode	RB Allocation	RB offset	Target MPR	Avg Pwr (dBm)		
						39725	40620	41515
						2503.5 MHz	2593 MHz	2682.5 MHz
LTE Band 41	15	QPSK	1	0	0	24.1	24.2	24.1
			1	37	0	24.1	24.2	24.2
			1	74	0	24.2	24.2	24.2
			36	0	1	23.0	23.2	23.0
			36	20	1	23.1	23.0	23.1
			36	39	1	23.1	23.2	23.1
			75	0	1	23.1	23.1	23.1
		16QAM	1	0	1	23.2	23.1	23.1
			1	37	1	23.2	23.0	23.2
			1	74	1	23.2	23.0	23.2
			36	0	2	22.1	22.1	22.1
			36	20	2	22.1	22.2	22.1
			36	39	2	22.1	22.2	22.2
			75	0	2	22.0	22.1	22.0
Band	BW (MHz)	Mode	RB Allocation	RB offset	Target MPR	Avg Pwr (dBm)		
						39700	40620	41540
						2501 MHz	2593 MHz	2685 MHz
LTE Band 41	10	QPSK	1	0	0	24.2	24.2	23.9
			1	25	0	24.1	24.2	24.1
			1	49	0	24.2	24.2	24.1
			25	0	1	23.0	23.1	23.1
			25	12	1	23.1	23.1	23.1
			25	25	1	23.1	23.1	23.1

This report shall not be reproduced except in full, without the written approval of UL Verification Services Inc.

			50	0	1	23.2	23.1	23.2
		16QAM	1	0	1	23.1	23.1	23.2
			1	25	1	23.1	23.0	23.2
			1	49	1	23.2	22.9	23.2
			25	0	2	22.0	22.0	22.0
			25	12	2	22.0	21.9	22.1
			25	25	2	22.1	21.9	22.0
			50	0	2	22.0	22.1	22.1

This report shall not be reproduced except in full, without the written approval of UL Verification Services Inc.

9. RADIATED TEST RESULTS

9.1. RADIATED POWER (ERP & EIRP)

RULE PART(S)

FCC: §2.1046, §22.913, §24.232, §27 and § 90.635.

LIMITS

22.913(a) - The ERP of mobile transmitters and auxiliary test transmitters must not exceed 7 Watts.

24.232(c) - Mobile/portable stations are limited to 2 watts e.i.r.p. peak power and the equipment must employ means to limit the power to the minimum necessary for successful communications.

In addition, when the transmitter power is measured in terms of average value, the peak-to-average ratio of the power shall not exceed 13dB.

TEST PROCEDURE

ANSI / TIA / EIA 603C Clause 2.2.17

TEST RESULTS

9.1.1. ERP/EIRP Results

Band	Mode	Channel	f(MHz)	ERP / EIRP	
				dBm	mW
Band 2	REL99	9262	1852.4	20.12	102.8
		9400	1880	21.16	130.62
		9538	1907.6	21.82	152.05
	HSDPA	9262	1852.4	20.58	114.29
		9400	1880	21.28	134.28
		9538	1907.6	21.71	148.25

This report shall not be reproduced except in full, without the written approval of UL Verification Services Inc.

Band	Mode	Channel	f(MHz)	ERP / EIRP	
				dBm	mW
Band 5	REL99	4132	826.4	20.421	110.18
		4183	836.6	20.901	123.06
		4233	846.6	19.971	99.33
	HSDPA	4132	826.4	20.741	118.6
		4183	836.6	20.681	116.98
		4233	846.6	20.441	110.69

Band	Mode	Channel	f(MHz)	ERP / EIRP	
				dBm	mW
GSM1900	GPRS	512	1850.2	28.77	753.36
		661	1880	27.28	534.56
		810	1909.8	28.15	653.13
	EGPRS	512	1850.2	23.53	225.42
		661	1880	23.79	239.33
		810	1909.8	24.52	283.14

Band	Mode	Channel	f(MHz)	ERP / EIRP	
				dBm	mW
GSM850	GPRS	128	824.2	27.371	545.88
		190	836.6	28.271	671.58
		251	848.8	28.741	748.34
	EGPRS	128	824.2	24.141	259.48
		190	836.6	24.191	262.48
		251	848.8	24.601	288.47

This report shall not be reproduced except in full, without the written approval of UL Verification Services Inc.

9.1.2. CDMA ERP/EIRP Results

Band	Mode	Channel	f(MHz)	ERP / EIRP	
				dBm	mW
BC1	1xRTT	25	1851.25	22.93	196.33
		600	1880	23.08	203.23
		1175	1908.75	22.94	196.78
	EVDO REL. 0	25	1851.25	22.26	168.26
		600	1880	22.88	194.08
		1175	1908.75	22.49	177.41

Band	Mode	Channel	f(MHz)	ERP / EIRP	
				dBm	mW
BC0	1xRTT	1013	824.7	21.03	126.76
		384	836.52	20.50	112.20
		777	848.31	20.73	118.30
	EVDO REL. 0	1013	824.7	20.50	112.20
		384	836.52	20.17	103.99
		777	848.31	20.15	103.51

Band	Mode	Channel	f(MHz)	ERP / EIRP	
				dBm	mW
BC10	1xRTT	476	817.9	22.66	184.50
		580	820.5	22.04	159.95
		684	823.1	22.75	188.36
	EVDO REL. 0	476	817.9	20.37	108.89
		580	820.5	21.85	153.10
		684	823.1	22.87	193.64

9.1.3. LTE ERP/EIRP Results

Band	BW (MHz)	Mode	RB/RB Size	f (MHz)	ERP / EIRP	
					dBm	mW
LTE41	20	QPSK	1/0	2506	22.47	176.6
			1/0	2593	22.87	193.64
			1/0	2680	23.04	201.37
		16QAM	1/0	2506	19.79	95.28

UL VERIFICATION SERVICES INC. FORM NO: CCSUP4701I
47173 BENICIA STREET, FREMONT, CA 94538, USA TEL: (510) 771-1000 FAX: (510) 661-0888

This report shall not be reproduced except in full, without the written approval of UL Verification Services Inc.

			1/0	2593	19.51	89.33
			1/0	2680	20.37	108.89

Band	BW (MHz)	Mode	RB/RB Size	f (MHz)	ERP / EIRP	
					dBm	mW
LTE41	15	QPSK	1/0	2503.5	21.51	141.58
			1/0	2593	22.38	172.98
			1/0	2682.5	22.13	163.31
		16QAM	1/0	2503.5	20.81	120.5
			1/0	2593	20.75	118.85
			1/0	2682.5	20.53	112.98

Band	BW (MHz)	Mode	RB/RB Size	f (MHz)	ERP / EIRP	
					dBm	mW
LTE41	10	QPSK	1/0	2501	21.99	158.12
			1/0	2593	22.55	179.89
			1/0	2685	21.47	140.28
		16QAM	1/0	2501	20.74	118.58
			1/0	2593	20.67	116.68
			1/0	2685	20.45	110.92

Band	BW (MHz)	Mode	RB/RB Size	f (MHz)	ERP / EIRP	
					dBm	mW
LTE26	10	QPSK	1/0	819	17.996	63.04
			1/0	831.5	19.815	95.83
			1/0	844	19.601	91.22
		16QAM	1/0	819	19.146	82.15
			1/0	831.5	18.825	76.3
			1/0	844	18.851	76.75

Band	BW (MHz)	Mode	RB/RB Size	f (MHz)	ERP / EIRP

This report shall not be reproduced except in full, without the written approval of UL Verification Services Inc.

					dBm	mW
LTE26	5	QPSK	1/0	816.5	20.406	109.8
			1/0	831.5	19.905	97.84
			1/0	846.5	19.561	90.39
		16QAM	1/0	816.5	19.266	84.45
			1/0	831.5	18.915	77.89
			1/0	846.5	18.071	64.14

Band	BW (MHz)	Mode	RB/RB Size	f (MHz)	ERP / EIRP	
					dBm	mW
LTE26	3	QPSK	1/0	815.5	20.506	112.36
			1/0	831.5	16.705	46.83
			1/0	847.5	18.931	78.18
		16QAM	1/0	815.5	19.436	87.82
			1/0	831.5	15.565	36.02
			1/0	847.5	18.081	64.28

Band	BW (MHz)	Mode	RB/RB Size	f (MHz)	ERP / EIRP	
					dBm	mW
LTE26	1.4	QPSK	1/0	814.7	18.036	63.62
			1/0	831.5	19.275	84.63
			1/0	848.3	17.051	50.71
		16QAM	1/0	814.7	17.486	56.05
			1/0	831.5	18.175	65.69
			1/0	848.3	16.571	45.4

Band	BW (MHz)	Mode	RB/RB Size	f (MHz)	ERP / EIRP	
					dBm	mW
LTE25	10	QPSK	1/0	1855	21.25	133.35
			1/0	1882.5	22.68	185.35
			1/0	1910	21.95	156.68

UL VERIFICATION SERVICES INC. FORM NO: CCSUP4701I
47173 BENICIA STREET, FREMONT, CA 94538, USA TEL: (510) 771-1000 FAX: (510) 661-0888

This report shall not be reproduced except in full, without the written approval of UL Verification Services Inc.

		16QAM	1/0	1855	19.85	96.61
			1/0	1882.5	21.31	135.21
			1/0	1910	20.74	118.58

Band	BW (MHz)	Mode	RB/RB Size	f (MHz)	ERP / EIRP	
					dBm	mW
LTE25	5	QPSK	1/0	1852.5	21.27	133.97
			1/0	1882.5	22.79	190.11
			1/0	1912.5	21.92	155.60
		16QAM	1/0	1852.5	19.72	93.54
			1/0	1882.5	21.28	134.28
			1/0	1912.5	20.87	122.18

Band	BW (MHz)	Mode	RB/RB Size	f (MHz)	ERP / EIRP	
					dBm	mW
LTE25	3	QPSK	1/0	1851.5	21.09	128.53
			1/0	1882.5	22.9	194.98
			1/0	1913.5	22.18	165.2
		16QAM	1/0	1851.5	19.78	95.06
			1/0	1882.5	21.88	154.17
			1/0	1913.5	20.87	122.18

UL VERIFICATION SERVICES INC. FORM NO: CCSUP4701I
47173 BENICIA STREET, FREMONT, CA 94538, USA TEL: (510) 771-1000 FAX: (510) 661-0888

This report shall not be reproduced except in full, without the written approval of UL Verification Services Inc.

9.1.4. ERP/EIRP DATA

Band

LTE41

20MHz

16QAM

High Frequency Substitution Measurement
UL Verification Services, Inc. Chamber B

Company: LG Electronics
Project #: 14U17501
Date: 5/30/14
Test Engineer: D. Soper
Configuration: EUT ONLY / Y Orientation
Mode: LTE B41 20MHz 16QAM

Test Equipment:
Receiving: Horn T345, and Chamber B SMA Cables
Substitution: Horn T59 Substitution, 4ft SMA Cable Warehouse

f MHz	SG reading (dBm)	Ant. Pol. (H/V)	Cable Loss (dB)	Antenna Gain (dBd)	EIRP (dBm)	Limit (dBm)	Margin (dB)	Notes
Low Ch								
2506.00	11.14	V	0.9	9.5	19.79	33.0	-13.2	
2506.00	9.20	H	0.9	9.5	17.85	33.0	-15.2	
Mid Ch								
2593.00	10.86	V	0.9	9.5	19.51	33.0	-13.5	
2593.00	9.24	H	0.9	9.5	17.89	33.0	-15.1	
High Ch								
2680.00	11.62	V	0.9	9.6	20.37	33.0	-12.6	
2680.00	9.62	H	0.9	9.6	18.37	33.0	-14.6	

Rev. 3.17.11
Note: For Band 4 EIRP limit is 30dBm

This report shall not be reproduced except in full, without the written approval of UL Verification Services Inc.

Band

LTE41

20MHz

QPSK

High Frequency Substitution Measurement
UL Verification Services, Inc. Chamber B

Company: LG Electronics
Project #: 14U17501
Date: 5/30/14
Test Engineer: D. Soper
Configuration: EUT ONLY / Y Orientation
Mode: LTE B41 20MHz QPSK

Test Equipment:
Receiving: Horn T345, and Chamber B SMA Cables
Substitution: Horn T59 Substitution, 4ft SMA Cable Warehouse

f MHz	SG reading (dBm)	Ant. Pol. (H/V)	Cable Loss (dB)	Antenna Gain (dBd)	EIRP (dBm)	Limit (dBm)	Margin (dB)	Notes
Low Ch								
2506.00	13.82	V	0.9	9.5	22.47	33.0	-10.5	
2506.00	9.47	H	0.9	9.5	18.12	33.0	-14.9	
Mid Ch								
2593.00	14.22	V	0.9	9.5	22.87	33.0	-10.1	
2593.00	12.36	H	0.9	9.5	21.01	33.0	-12.0	
High Ch								
2680.00	14.29	V	0.9	9.6	23.04	33.0	-10.0	
2680.00	9.19	H	0.9	9.6	17.94	33.0	-15.1	

Rev. 3.17.11
Note: For Band 4 EIRP limit is 30dBm

UL VERIFICATION SERVICES INC. FORM NO: CCSUP4701I
47173 BENICIA STREET, FREMONT, CA 94538, USA TEL: (510) 771-1000 FAX: (510) 661-0888

This report shall not be reproduced except in full, without the written approval of UL Verification Services Inc.

Band

LTE41

15MHz

16QAM

High Frequency Substitution Measurement
UL Verification Services, Inc. Chamber C

Company: LG Electronics
Project #: 14U17501
Date: 5/30/14
Test Engineer: D. Soper
Configuration: EUT ONLY / Y-orientation
Mode: LTE B41 15MHz 16QAM

Test Equipment:
Receiving: Horn T119, and Chamber C SMA Cables
Substitution: Horn T60 Substitution, 4ft SMA Cable Warehouse

f MHz	SG reading (dBm)	Ant. Pol. (H/V)	Cable Loss (dB)	Antenna Gain (dBi)	EIRP (dBm)	Limit (dBm)	Margin (dB)	Notes
Low Ch								
2503.50	12.16	V	0.9	9.5	20.81	33.0	-12.2	
2503.50	10.51	H	0.9	9.5	19.16	33.0	-13.8	
Mid Ch								
2593.00	12.10	V	0.9	9.5	20.75	33.0	-12.3	
2593.00	8.43	H	0.9	9.5	17.08	33.0	-15.9	
High Ch								
2682.50	11.78	V	0.9	9.6	20.53	33.0	-12.5	
2682.50	11.00	H	0.9	9.6	19.75	33.0	-13.3	

Rev. 3.17.11
Note: For Band 4 EIRP limit is 30dBm

UL VERIFICATION SERVICES INC. FORM NO: CCSUP4701I
47173 BENICIA STREET, FREMONT, CA 94538, USA TEL: (510) 771-1000 FAX: (510) 661-0888

This report shall not be reproduced except in full, without the written approval of UL Verification Services Inc.

Band

LTE41

15MHz

QPSK

High Frequency Substitution Measurement
UL Verification Services, Inc. Chamber C

Company: LG Electronics
Project #: 14U17501
Date: 5/30/14
Test Engineer: D. Soper
Configuration: EUT ONLY / Y-orientation
Mode: LTE B41 15MHz QPSK

Test Equipment:
Receiving: Horn T119, and Chamber C SMA Cables
Substitution: Horn T60 Substitution, 4ft SMA Cable Warehouse

f MHz	SG reading (dBm)	Ant. Pol. (H/V)	Cable Loss (dB)	Antenna Gain (dBi)	EIRP (dBm)	Limit (dBm)	Margin (dB)	Notes
Low Ch								
2503.50	12.86	V	0.9	9.5	21.51	33.0	-11.5	
2503.50	10.06	H	0.9	9.5	18.71	33.0	-14.3	
Mid Ch								
2593.00	13.73	V	0.9	9.5	22.38	33.0	-10.6	
2593.00	7.32	H	0.9	9.5	15.97	33.0	-17.0	
High Ch								
2682.50	13.38	V	0.9	9.6	22.13	33.0	-10.9	
2682.50	9.90	H	0.9	9.6	18.65	33.0	-14.4	

Rev. 3.17.11
Note: For Band 4 EIRP limit is 30dBm

UL VERIFICATION SERVICES INC. FORM NO: CCSUP4701I
47173 BENICIA STREET, FREMONT, CA 94538, USA TEL: (510) 771-1000 FAX: (510) 661-0888

This report shall not be reproduced except in full, without the written approval of UL Verification Services Inc.

Band

LTE41

10MHz

16QAM

High Frequency Substitution Measurement
UL Verification Services, Inc. Chamber B

Company: LG Electronics
Project #: 14U17501
Date: 5/30/14
Test Engineer: D. Soper
Configuration: EUT ONLY / Y-orientation
Mode: LTE B41 10MHz 16QAM

Test Equipment:
Receiving: Horn T119, and Chamber B SMA Cables
Substitution: Horn T60 Substitution, 4ft SMA Cable Warehouse

f MHz	SG reading (dBm)	Ant. Pol. (H/V)	Cable Loss (dB)	Antenna Gain (dBi)	EIRP (dBm)	Limit (dBm)	Margin (dB)	Notes
Low Ch								
2501.00	12.09	V	0.9	9.5	20.74	33.0	-12.3	
2501.00	7.60	H	0.9	9.5	16.25	33.0	-16.8	
Mid Ch								
2593.00	12.02	V	0.9	9.5	20.67	33.0	-12.3	
2593.00	8.49	H	0.9	9.5	17.14	33.0	-15.9	
High Ch								
2685.00	11.70	V	0.9	9.6	20.45	33.0	-12.6	
2685.00	9.46	H	0.9	9.6	18.21	33.0	-14.8	

Rev. 3.17.11
Note: For Band 4 EIRP limit is 30dBm

UL VERIFICATION SERVICES INC. FORM NO: CCSUP4701I
47173 BENICIA STREET, FREMONT, CA 94538, USA TEL: (510) 771-1000 FAX: (510) 661-0888

This report shall not be reproduced except in full, without the written approval of UL Verification Services Inc.

Band

LTE41

10MHz

QPSK

High Frequency Substitution Measurement
UL Verification Services, Inc. Chamber B

Company: LG Electronics
Project #: 14U17501
Date: 5/30/14
Test Engineer: D. Soper
Configuration: EUT ONLY / Y-orientation
Mode: LTE B41 10MHz QPSK

Test Equipment:
Receiving: Horn T119, and Chamber B SMA Cables
Substitution: Horn T60 Substitution, 4ft SMA Cable Warehouse

f MHz	SG reading (dBm)	Ant. Pol. (H/V)	Cable Loss (dB)	Antenna Gain (dBi)	EIRP (dBm)	Limit (dBm)	Margin (dB)	Notes
Low Ch								
2501.00	13.34	V	0.9	9.5	21.99	33.0	-11.0	
2501.00	8.80	H	0.9	9.5	17.45	33.0	-15.6	
Mid Ch								
2593.00	13.90	V	0.9	9.5	22.55	33.0	-10.5	
2593.00	9.92	H	0.9	9.5	18.57	33.0	-14.4	
High Ch								
2685.00	12.72	V	0.9	9.6	21.47	33.0	-11.5	
2685.00	10.56	H	0.9	9.6	19.31	33.0	-13.7	

Rev. 3.17.11
Note: For Band 4 EIRP limit is 30dBm

UL VERIFICATION SERVICES INC. FORM NO: CCSUP4701I
47173 BENICIA STREET, FREMONT, CA 94538, USA TEL: (510) 771-1000 FAX: (510) 661-0888

This report shall not be reproduced except in full, without the written approval of UL Verification Services Inc.

Band

LTE26

10MHz

16QAM

High Frequency Substitution Measurement
Compliance Certification Services Chamber C

Company: LG
Project #: 14U17849
Date: 05/29/14
Test Engineer: D. Soper
Configuration: EUT only
Mode: LTE band 26, 10MHz BW
16QAM, Average, RB1-0

Test Equipment:
Receiving: Sunol T407, and 3m Chamber N-type Cable (Setup this one for testing EUT)
Substitution: Dipole S/N: 00022117, 4ft SMA Cable (SN # 245200 001) Warehouse.

f MHz	SG reading (dBm)	Ant. Pol. (H/V)	Cable Loss (dB)	Antenna Gain (dBd)	ERP (dBm)	Limit (dBm)	Margin (dB)	Notes
Low Ch								
819.00	12.84	V	0.9	0.0	11.94	38.5	-26.5	
819.00	20.05	H	0.9	0.0	19.15	38.5	-19.3	
Mid Ch								
831.50	13.75	V	0.9	0.0	12.85	38.5	-25.6	
831.50	19.72	H	0.9	0.0	18.83	38.5	-19.6	
High Ch								
844.00	13.92	V	0.9	0.0	13.02	38.5	-25.4	
844.00	19.75	H	0.9	0.0	18.85	38.5	-19.6	

Rev. 3.17.11
Note: For Band 13/17 ERP limit is 34.77dBm; For Band 26 limit is 50dBm

UL VERIFICATION SERVICES INC. FORM NO: CCSUP4701I
47173 BENICIA STREET, FREMONT, CA 94538, USA TEL: (510) 771-1000 FAX: (510) 661-0888

This report shall not be reproduced except in full, without the written approval of UL Verification Services Inc.

Band

LTE26

10MHz

QPSK

High Frequency Substitution Measurement
Compliance Certification Services Chamber C

Company: LG
Project #: 14U17849
Date: 05/29/14
Test Engineer: D. Soper
Configuration: EUT only
Mode: LTE band 26, 10MHz BW
QPSK, Average, RB1-0

Test Equipment:
Receiving: Sunol T407, and 3m Chamber N-type Cable (Setup this one for testing EUT)
Substitution: Dipole S/N: 00022117, 4ft SMA Cable (SN # 245200 001) Warehouse.

f MHz	SG reading (dBm)	Ant. Pol. (H/V)	Cable Loss (dB)	Antenna Gain (dBd)	ERP (dBm)	Limit (dBm)	Margin (dB)	Notes
Low Ch								
819.00	11.94	V	0.9	0.0	11.04	38.5	-27.4	
819.00	18.90	H	0.9	0.0	18.00	38.5	-20.5	
Mid Ch								
831.50	12.40	V	0.9	0.0	11.50	38.5	-26.9	
831.50	20.71	H	0.9	0.0	19.82	38.5	-18.6	
High Ch								
844.00	13.62	V	0.9	0.0	12.72	38.5	-25.7	
844.00	20.50	H	0.9	0.0	19.60	38.5	-18.8	

Rev. 3.17.11
Note: For Band 13/17 ERP limit is 34.77dBm; For Band 26 limit is 50dBm

UL VERIFICATION SERVICES INC. FORM NO: CCSUP4701I
47173 BENICIA STREET, FREMONT, CA 94538, USA TEL: (510) 771-1000 FAX: (510) 661-0888

This report shall not be reproduced except in full, without the written approval of UL Verification Services Inc.

Band

LTE26

5MHz

16QAM

High Frequency Substitution Measurement
Compliance Certification Services Chamber C

Company: LG
Project #: 14U17849
Date: 05/29/14
Test Engineer: D. Soper
Configuration: EUT only
Mode: LTE band 26, 5MHz BW
16QAM, Average, RB1-0

Test Equipment:
Receiving: Sunol T407, and 3m Chamber N-type Cable (Setup this one for testing EUT)
Substitution: Dipole S/N: 00022117, 4ft SMA Cable (SN # 245200 001) Warehouse.

f MHz	SG reading (dBm)	Ant. Pol. (H/V)	Cable Loss (dB)	Antenna Gain (dBd)	ERP (dBm)	Limit (dBm)	Margin (dB)	Notes
Low Ch								
816.50	11.70	V	0.9	0.0	10.80	38.5	-27.6	
816.50	20.17	H	0.9	0.0	19.27	38.5	-19.2	
Mid Ch								
831.50	12.05	V	0.9	0.0	11.15	38.5	-27.3	
831.50	19.81	H	0.9	0.0	18.92	38.5	-19.5	
High Ch								
846.50	13.14	V	0.9	0.0	12.24	38.5	-26.2	
846.50	18.97	H	0.9	0.0	18.07	38.5	-20.4	

Rev. 3.17.11
Note: For Band 13/17 ERP limit is 34.77dBm; For Band 26 limit is 50dBm

UL VERIFICATION SERVICES INC. FORM NO: CCSUP4701I
47173 BENICIA STREET, FREMONT, CA 94538, USA TEL: (510) 771-1000 FAX: (510) 661-0888

This report shall not be reproduced except in full, without the written approval of UL Verification Services Inc.

Band

LTE26

5MHz

QPSK

High Frequency Substitution Measurement
Compliance Certification Services Chamber C

Company: LG
Project #: 14U17849
Date: 05/29/14
Test Engineer: D. Soper
Configuration: EUT only
Mode: LTE band 26, 5MHz BW
QPSK, Average, RB1-0

Test Equipment:
Receiving: Sunol T407, and 3m Chamber N-type Cable (Setup this one for testing EUT)
Substitution: Dipole S/N: 00022117, 4ft SMA Cable (SN # 245200 001) Warehouse.

f MHz	SG reading (dBm)	Ant. Pol. (H/V)	Cable Loss (dB)	Antenna Gain (dBd)	ERP (dBm)	Limit (dBm)	Margin (dB)	Notes
Low Ch								
816.50	12.82	V	0.9	0.0	11.92	38.5	-26.5	
816.50	21.31	H	0.9	0.0	20.41	38.5	-18.0	
Mid Ch								
831.50	13.31	V	0.9	0.0	12.41	38.5	-26.0	
831.50	20.80	H	0.9	0.0	19.91	38.5	-18.5	
High Ch								
846.50	14.36	V	0.9	0.0	13.46	38.5	-25.0	
846.50	20.46	H	0.9	0.0	19.56	38.5	-18.9	

Rev. 3.17.11
Note: For Band 13/17 ERP limit is 34.77dBm; For Band 26 limit is 50dBm

UL VERIFICATION SERVICES INC. FORM NO: CCSUP4701I
47173 BENICIA STREET, FREMONT, CA 94538, USA TEL: (510) 771-1000 FAX: (510) 661-0888

This report shall not be reproduced except in full, without the written approval of UL Verification Services Inc.

Band

LTE26

3MHz

16QAM

High Frequency Substitution Measurement
Compliance Certification Services Chamber C

Company: LG
Project #: 14U17849
Date: 05/29/14
Test Engineer: D. Soper
Configuration: EUT only
Mode: LTE band 26, 3MHz BW
16QAM

Test Equipment:
Receiving: Sunol T407, and 3m Chamber N-type Cable (Setup this one for testing EUT)
Substitution: Dipole S/N: 00022117, 4ft SMA Cable (SN # 245200 001) Warehouse.

f MHz	SG reading (dBm)	Ant. Pol. (H/V)	Cable Loss (dB)	Antenna Gain (dBd)	ERP (dBm)	Limit (dBm)	Margin (dB)	Notes
Low Ch								
815.50	14.06	V	0.9	0.0	13.16	38.5	-25.3	
815.50	20.34	H	0.9	0.0	19.44	38.5	-19.0	
Mid Ch								
831.50	13.43	V	0.9	0.0	12.53	38.5	-25.9	
831.50	16.46	H	0.9	0.0	15.57	38.5	-22.9	
High Ch								
847.50	10.58	V	0.9	0.0	9.68	38.5	-28.8	
847.50	18.98	H	0.9	0.0	18.08	38.5	-20.4	

Rev. 3.17.11
Note: For Band 13/17 ERP limit is 34.77dBm; For Band 26 limit is 50dBm

UL VERIFICATION SERVICES INC. FORM NO: CCSUP4701I
47173 BENICIA STREET, FREMONT, CA 94538, USA TEL: (510) 771-1000 FAX: (510) 661-0888

This report shall not be reproduced except in full, without the written approval of UL Verification Services Inc.

Band

LTE26

3MHz

QPSK

High Frequency Substitution Measurement
Compliance Certification Services Chamber C

Company: LG
Project #: 14U17849
Date: 05/29/14
Test Engineer: D. Soper
Configuration: EUT only
Mode: LTE band 26, 3MHz BW
QPSK

Test Equipment:
Receiving: Sunol T407, and 3m Chamber N-type Cable (Setup this one for testing EUT)
Substitution: Dipole S/N: 00022117, 4ft SMA Cable (SN # 245200 001) Warehouse.

f MHz	SG reading (dBm)	Ant. Pol. (H/V)	Cable Loss (dB)	Antenna Gain (dBd)	ERP (dBm)	Limit (dBm)	Margin (dB)	Notes
Low Ch								
815.50	15.07	V	0.9	0.0	14.17	38.5	-24.3	
815.50	21.41	H	0.9	0.0	20.51	38.5	-17.9	
Mid Ch								
831.50	14.54	V	0.9	0.0	13.64	38.5	-24.8	
831.50	17.60	H	0.9	0.0	16.71	38.5	-21.7	
High Ch								
847.50	11.71	V	0.9	0.0	10.81	38.5	-27.6	
847.50	19.83	H	0.9	0.0	18.93	38.5	-19.5	

Rev. 3.17.11
Note: For Band 13/17 ERP limit is 34.77dBm; For Band 26 limit is 50dBm

UL VERIFICATION SERVICES INC. FORM NO: CCSUP4701I
47173 BENICIA STREET, FREMONT, CA 94538, USA TEL: (510) 771-1000 FAX: (510) 661-0888

This report shall not be reproduced except in full, without the written approval of UL Verification Services Inc.

Band

LTE26

1.4MHz

16QAM

High Frequency Substitution Measurement
Compliance Certification Services Chamber C

Company: LG
Project #: 14U17849
Date: 05/29/14
Test Engineer: D. Soper
Configuration: EUT only
Mode: LTE band 26, 1.4MHz BW
16QAM, Average, RB1-0

Test Equipment:
Receiving: Sunol T407, and 3m Chamber N-type Cable (Setup this one for testing EUT)
Substitution: Dipole S/N: 00022117, 4ft SMA Cable (SN # 245200 001) Warehouse.

f MHz	SG reading (dBm)	Ant. Pol. (H/V)	Cable Loss (dB)	Antenna Gain (dBd)	ERP (dBm)	Limit (dBm)	Margin (dB)	Notes
Low Ch								
814.70	12.33	V	0.9	0.0	11.43	38.5	-27.0	
814.70	18.39	H	0.9	0.0	17.49	38.5	-21.0	
Mid Ch								
831.50	12.35	V	0.9	0.0	11.45	38.5	-27.0	
831.50	19.07	H	0.9	0.0	18.18	38.5	-20.3	
High Ch								
848.30	11.62	V	0.9	0.0	10.72	38.5	-27.7	
848.30	17.47	H	0.9	0.0	16.57	38.5	-21.9	

Rev. 3.17.11
Note: For Band 13/17 ERP limit is 34.77dBm; For Band 26 limit is 50dBm

UL VERIFICATION SERVICES INC. FORM NO: CCSUP4701I
47173 BENICIA STREET, FREMONT, CA 94538, USA TEL: (510) 771-1000 FAX: (510) 661-0888

This report shall not be reproduced except in full, without the written approval of UL Verification Services Inc.

Band

LTE26

1.4MHz

QPSK

High Frequency Substitution Measurement
Compliance Certification Services Chamber C

Company: LG
Project #: 14U17849
Date: 05/29/14
Test Engineer: D. Soper
Configuration: EUT only
Mode: LTE band 26, 1.4MHz BW
QPSK, Average, RB1-0

Test Equipment:
Receiving: Sunol T407, and 3m Chamber N-type Cable (Setup this one for testing EUT)
Substitution: Dipole S/N: 00022117, 4ft SMA Cable (SN # 245200 001) Warehouse.

f MHz	SG reading (dBm)	Ant. Pol. (H/V)	Cable Loss (dB)	Antenna Gain (dBd)	ERP (dBm)	Limit (dBm)	Margin (dB)	Notes
Low Ch								
814.70	11.96	V	0.9	0.0	11.06	38.5	-27.4	
814.70	18.94	H	0.9	0.0	18.04	38.5	-20.4	
Mid Ch								
831.50	12.31	V	0.9	0.0	11.41	38.5	-27.0	
831.50	20.17	H	0.9	0.0	19.28	38.5	-19.2	
High Ch								
848.30	12.91	V	0.9	0.0	12.01	38.5	-26.4	
848.30	17.95	H	0.9	0.0	17.05	38.5	-21.4	

Rev. 3.17.11
Note: For Band 13/17 ERP limit is 34.77dBm; For Band 26 limit is 50dBm

UL VERIFICATION SERVICES INC. FORM NO: CCSUP4701I
47173 BENICIA STREET, FREMONT, CA 94538, USA TEL: (510) 771-1000 FAX: (510) 661-0888

This report shall not be reproduced except in full, without the written approval of UL Verification Services Inc.

Band

LTE25

10MHz

16QAM

High Frequency Fundamental Measurement
Compliance Certification Services Chamber B

Company: LG
Project #: 14U17849
Date: 05/21/14
Test Engineer: Charles Vergonio
Configuration: EUT only
Mode: LTE band 25, 10MHz BW
16QAM, Average, RB1-0 / Y Orientation

Test Equipment:
Receiving: Horn T345, and Chamber B SMA Cables
Substitution: Horn T59 Substitution, 4ft SMA Cable Warehouse

f GHz	SG reading (dBm)	Ant. Pol. (H/V)	Cable Loss (dB)	Antenna Gain (dBi)	EIRP (dBm)	Limit (dBm)	Delta (dB)	Notes
Low Ch								
1.855	12.9	V	0.85	7.85	19.85	33.0	-13.2	
1.855	8.8	H	0.85	7.85	15.80	33.0	-17.2	
Mid Ch								
1.883	14.3	V	0.85	7.85	21.31	33.0	-11.7	
1.883	9.2	H	0.85	7.85	16.20	33.0	-16.8	
High Ch								
1.910	13.7	V	0.85	7.85	20.74	33.0	-12.3	
1.910	9.2	H	0.85	7.85	16.24	33.0	-16.8	

This report shall not be reproduced except in full, without the written approval of UL Verification Services Inc.

Band

LTE25

10MHz

QPSK

High Frequency Fundamental Measurement
Compliance Certification Services Chamber B

Company: LG
Project #: 14U17849
Date: 05/21/14
Test Engineer: Charles Vergonio
Configuration: EUT only
Mode: LTE band 25, 10MHz BW
QPSK, Average, RB1-0 / Y Orientation

Test Equipment:
Receiving: Horn T345, and Chamber B SMA Cables
Substitution: Horn T59 Substitution, 4ft SMA Cable Warehouse

f GHz	SG reading (dBm)	Ant. Pol. (H/V)	Cable Loss (dB)	Antenna Gain (dBi)	EIRP (dBm)	Limit (dBm)	Delta (dB)	Notes
Low Ch								
1.855	14.3	V	0.85	7.85	21.25	33.0	-11.8	
1.855	10.1	H	0.85	7.85	17.14	33.0	-15.9	
Mid Ch								
1.883	15.7	V	0.85	7.85	22.68	33.0	-10.3	
1.883	9.8	H	0.85	7.85	16.76	33.0	-16.2	
High Ch								
1.910	15.0	V	0.85	7.85	21.95	33.0	-11.1	
1.910	9.9	H	0.85	7.85	16.91	33.0	-16.1	

This report shall not be reproduced except in full, without the written approval of UL Verification Services Inc.

Band

LTE25

5MHz

16QAM

High Frequency Fundamental Measurement
Compliance Certification Services Chamber B

Company: LG
Project #: 14U17849
Date: 05/21/14
Test Engineer: Charles Vergonio
Configuration: EUT only
Mode: LTE band 25, 5MHz BW
16QAM, Average, RB1-0 / Y Orientation

Test Equipment:
Receiving: Horn T345, and Chamber B SMA Cables
Substitution: Horn T59 Substitution, 4ft SMA Cable Warehouse

f GHz	SG reading (dBm)	Ant. Pol. (H/V)	Cable Loss (dB)	Antenna Gain (dBi)	EIRP (dBm)	Limit (dBm)	Delta (dB)	Notes
Low Ch								
1.853	12.7	V	0.85	7.85	19.72	33.0	-13.3	
1.853	8.7	H	0.85	7.85	15.73	33.0	-17.3	
Mid Ch								
1.883	14.3	V	0.85	7.85	21.28	33.0	-11.7	
1.883	8.9	H	0.85	7.85	15.93	33.0	-17.1	
High Ch								
1.913	13.9	V	0.85	7.85	20.87	33.0	-12.1	
1.913	9.3	H	0.85	7.85	16.34	33.0	-16.7	

UL VERIFICATION SERVICES INC. FORM NO: CCSUP4701I
47173 BENICIA STREET, FREMONT, CA 94538, USA TEL: (510) 771-1000 FAX: (510) 661-0888

This report shall not be reproduced except in full, without the written approval of UL Verification Services Inc.

High Frequency Fundamental Measurement
Compliance Certification Services Chamber B

Company: LG
Project #: 14U17849
Date: 05/21/14
Test Engineer: Charles Vergonio
Configuration: EUT only
Mode: LTE band 25, 5MHz BW
QPSK, Average, RB1-0 / Y Orientation

Band

LTE25

5MHz

QPSK

Test Equipment:
Receiving: Horn T345, and Chamber B SMA Cables
Substitution: Horn T59 Substitution, 4ft SMA Cable Warehouse

f GHz	SG reading (dBm)	Ant. Pol. (H/V)	Cable Loss (dB)	Antenna Gain (dBi)	EIRP (dBm)	Limit (dBm)	Delta (dB)	Notes
Low Ch								
1.853	14.3	V	0.85	7.85	21.27	33.0	-11.7	
1.853	10.3	H	0.85	7.85	17.33	33.0	-15.7	
Mid Ch								
1.883	15.8	V	0.85	7.85	22.79	33.0	-10.2	
1.883	10.5	H	0.85	7.85	17.53	33.0	-15.5	
High Ch								
1.913	14.9	V	0.85	7.85	21.92	33.0	-11.1	
1.913	10.3	H	0.85	7.85	17.34	33.0	-15.7	

This report shall not be reproduced except in full, without the written approval of UL Verification Services Inc.

Band

LTE25

3MHz

16QAM

High Frequency Fundamental Measurement
Compliance Certification Services Chamber B

Company: LG
Project #: 14U17849
Date: 05/21/14
Test Engineer: Charles Vergonio
Configuration: EUT only
Mode: LTE band 25, 3MHz BW
16QAM

Test Equipment:
Receiving: Horn T345, and Chamber B SMA Cables
Substitution: Horn T59 Substitution, 4ft SMA Cable Warehouse

f GHz	SG reading (dBm)	Ant. Pol. (H/V)	Cable Loss (dB)	Antenna Gain (dBi)	EIRP (dBm)	Limit (dBm)	Delta (dB)	Notes
Low Ch								
1.852	12.8	V	0.85	7.85	19.78	33.0	-13.2	
1.852	8.9	H	0.85	7.85	15.86	33.0	-17.1	
Mid Ch								
1.883	14.9	V	0.85	7.85	21.88	33.0	-11.1	
1.883	9.7	H	0.85	7.85	16.70	33.0	-16.3	
High Ch								
1.914	13.9	V	0.85	7.85	20.87	33.0	-12.1	
1.914	9.6	H	0.85	7.85	16.62	33.0	-16.4	

This report shall not be reproduced except in full, without the written approval of UL Verification Services Inc.

Band

LTE25

3MHz

QPSK

High Frequency Fundamental Measurement
Compliance Certification Services Chamber B

Company: LG
Project #: 14U17849
Date: 05/21/14
Test Engineer: Charles Vergonio
Configuration: EUT only
Mode: LTE band 25, 3MHz BW
QPSK, Average, RB1-0 / Y Orientation

Test Equipment:
Receiving: Horn T345, and Chamber B SMA Cables
Substitution: Horn T59 Substitution, 4ft SMA Cable Warehouse

f GHz	SG reading (dBm)	Ant. Pol. (H/V)	Cable Loss (dB)	Antenna Gain (dBi)	EIRP (dBm)	Limit (dBm)	Delta (dB)	Notes
Low Ch								
1.852	14.1	V	0.85	7.85	21.09	33.0	-11.9	
1.852	10.2	H	0.85	7.85	17.16	33.0	-15.8	
Mid Ch								
1.883	15.9	V	0.85	7.85	22.90	33.0	-10.1	
1.883	11.1	H	0.85	7.85	18.10	33.0	-14.9	
High Ch								
1.914	15.2	V	0.85	7.85	22.18	33.0	-10.8	
1.914	10.9	H	0.85	7.85	17.92	33.0	-15.1	

This report shall not be reproduced except in full, without the written approval of UL Verification Services Inc.

Band

Band 2

HSDPA

High Frequency Fundamental Measurement
Compliance Certification Services Chamber A

Company: LG
Project #: 14U17849
Date: 05/23/14
Test Engineer: R. Alegre
Configuration: EUT ONLY
Mode: HSDPA 99 B2 1900Mhz

Test Equipment:
Receiving: T136, and Chamber A SMA Cables
Substitution: Horn T59 Substitution, 4ft SMA Cable (244639001) Warehouse

f MHz	SG reading (dBm)	Ant. Pol. (H/V)	Cable Loss (dB)	Antenna Gain (dBi)	EIRP (dBm)	Limit (dBm)	Delta (dB)	Notes
Low Ch								
1852.40	11.2	V	0.85	7.85	18.20	33.0	-14.8	
1852.40	13.6	H	0.85	7.85	20.58	33.0	-12.4	
Mid Ch								
1880.00	12.9	V	0.85	7.85	19.89	33.0	-13.1	
1880.00	14.3	H	0.85	7.85	21.28	33.0	-11.7	
High Ch								
1907.60	11.8	V	0.85	7.90	18.85	33.0	-14.2	
1907.60	14.7	H	0.85	7.90	21.71	33.0	-11.3	

Rev. 3.17.11

UL VERIFICATION SERVICES INC. FORM NO: CCSUP4701I
47173 BENICIA STREET, FREMONT, CA 94538, USA TEL: (510) 771-1000 FAX: (510) 661-0888

This report shall not be reproduced except in full, without the written approval of UL Verification Services Inc.

Band

Band 2

REL99

High Frequency Fundamental Measurement
Compliance Certification Services Chamber A

Company: LG
Project #: 14U17849
Date: 05/23/14
Test Engineer: R. Alegre
Configuration: EUT ONLY
Mode: REL 99 B2 1900Mhz

Test Equipment:
Receiving: T136, and Chamber A SMA Cables
Substitution: Horn T59 Substitution, 4ft SMA Cable (244639001) Warehouse

f MHz	SG reading (dBm)	Ant. Pol. (H/V)	Cable Loss (dB)	Antenna Gain (dBi)	EIRP (dBm)	Limit (dBm)	Delta (dB)	Notes
Low Ch								
1852.40	12.1	V	0.85	7.85	19.07	33.0	-13.9	
1852.40	13.1	H	0.85	7.85	20.12	33.0	-12.9	
Mid Ch								
1880.00	12.3	V	0.85	7.85	19.28	33.0	-13.7	
1880.00	14.2	H	0.85	7.85	21.16	33.0	-11.8	
High Ch								
1907.60	11.8	V	0.85	7.90	18.87	33.0	-14.1	
1907.60	14.8	H	0.85	7.90	21.82	33.0	-11.2	

Rev. 3.17.11

This report shall not be reproduced except in full, without the written approval of UL Verification Services Inc.

Band

Band 5

HSDPA

High Frequency Substitution Measurement
UL Verification Services, Inc. Chamber E

Company: LG
Project #: 14U17849
Date: 05/28/14
Test Engineer: R. Alegre
Configuration: EUT, Y Position
Mode: WCDMA_HSDPA_850

Test Equipment:
Receiving: Sunol T408, and 5m E Chamber N-type Cable (Setup this one for testing EUT)
Substitution: Dipole S/N: 00022117, 4ft SMA Cable (SN # 245200 001) Warehouse.

f MHz	SG reading (dBm)	Ant. Pol. (H/V)	Cable Loss (dB)	Antenna Gain (dBd)	ERP (dBm)	Limit (dBm)	Margin (dB)	Notes
Low Ch								
826.40	15.06	V	0.9	0.0	14.16	38.5	-24.3	
826.40	21.64	H	0.9	0.0	20.74	38.5	-17.7	
Mid Ch								
836.60	14.13	V	0.9	0.0	13.23	38.5	-25.2	
836.60	21.58	H	0.9	0.0	20.68	38.5	-17.8	
High Ch								
846.60	15.13	V	0.9	0.0	14.23	38.5	-24.2	
846.60	21.34	H	0.9	0.0	20.44	38.5	-18.0	

Rev. 3.17.11
Note: For Band 13/17 ERP limit is 34.77dBm; For Band 26 limit is 50dBm

UL VERIFICATION SERVICES INC. FORM NO: CCSUP4701I
47173 BENICIA STREET, FREMONT, CA 94538, USA TEL: (510) 771-1000 FAX: (510) 661-0888

This report shall not be reproduced except in full, without the written approval of UL Verification Services Inc.

Band

Band 5

REL99

High Frequency Substitution Measurement
UL Verification Services, Inc. Chamber E

Company: LG
Project #: 14U17849
Date: 05/28/14
Test Engineer: R. Alegre
Configuration: EUT, Y Position
Mode: WCDMA_REL99_850

Test Equipment:
Receiving: Sunol T408, and 5m E Chamber N-type Cable (Setup this one for testing EUT)
Substitution: Dipole S/N: 00022117, 4ft SMA Cable (SN # 245200 001) Warehouse.

f MHz	SG reading (dBm)	Ant. Pol. (H/V)	Cable Loss (dB)	Antenna Gain (dBd)	ERP (dBm)	Limit (dBm)	Margin (dB)	Notes
Low Ch								
826.40	15.45	V	0.9	0.0	14.55	38.5	-23.9	
826.40	21.32	H	0.9	0.0	20.42	38.5	-18.0	
Mid Ch								
836.60	15.29	V	0.9	0.0	14.39	38.5	-24.1	
836.60	21.80	H	0.9	0.0	20.90	38.5	-17.5	
High Ch								
846.60	14.84	V	0.9	0.0	13.94	38.5	-24.5	
846.60	20.87	H	0.9	0.0	19.97	38.5	-18.5	

Rev. 3.17.11
Note: For Band 13/17 ERP limit is 34.77dBm; For Band 26 limit is 50dBm

UL VERIFICATION SERVICES INC. FORM NO: CCSUP4701I
47173 BENICIA STREET, FREMONT, CA 94538, USA TEL: (510) 771-1000 FAX: (510) 661-0888

This report shall not be reproduced except in full, without the written approval of UL Verification Services Inc.

Band

GSM1900

EGPRS

High Frequency Substitution Measurement
UL Verification Services, Inc. Chamber B

Company: LG
Project #: 14U17849
Date: 05/22/14
Test Engineer: Charles Vergonio
Configuration: EUT only, Y position
Mode: EGPRS 1900MHz

Test Equipment:
Receiving: Horn T345, and Chamber B SMA Cables
Substitution: Horn T60 Substitution, 4ft SMA Cable Warehouse

f MHz	SG reading (dBm)	Ant. Pol. (H/V)	Cable Loss (dB)	Antenna Gain (dBd)	EIRP (dBm)	Limit (dBm)	Margin (dB)	Notes
Low Ch								
1850.20	9.99	V	0.85	8.7	17.84	33.0	-15.2	
1850.20	15.68	H	0.85	8.7	23.53	33.0	-9.5	
Mid Ch								
1880.00	11.21	V	0.85	8.7	19.06	33.0	-13.9	
1880.00	15.94	H	0.85	8.7	23.79	33.0	-9.2	
High Ch								
1909.80	13.09	V	0.85	8.2	20.44	33.0	-12.6	
1909.80	17.17	H	0.85	8.2	24.52	33.0	-8.5	

Rev. 3.17.11
Note: For Band 4 EIRP limit is 30dBm

UL VERIFICATION SERVICES INC. FORM NO: CCSUP4701I
47173 BENICIA STREET, FREMONT, CA 94538, USA TEL: (510) 771-1000 FAX: (510) 661-0888

This report shall not be reproduced except in full, without the written approval of UL Verification Services Inc.

Band

GSM1900

GPRS

High Frequency Substitution Measurement
UL Verification Services, Inc. Chamber B

Company: LG
Project #: 14U17849
Date: 05/22/14
Test Engineer: Charles Vergonio
Configuration: EUT only, Y position
Mode: GPRS 1900MHz

Test Equipment:
Receiving: Horn T345, and Chamber B SMA Cables
Substitution: Horn T60 Substitution, 4ft SMA Cable Warehouse

f MHz	SG reading (dBm)	Ant. Pol. (H/V)	Cable Loss (dB)	Antenna Gain (dBd)	EIRP (dBm)	Limit (dBm)	Margin (dB)	Notes
Low Ch								
1850.20	14.94	V	0.85	8.7	22.79	33.0	-10.2	
1850.20	20.92	H	0.85	8.7	28.77	33.0	-4.2	
Mid Ch								
1880.00	14.35	V	0.85	8.7	22.20	33.0	-10.8	
1880.00	19.43	H	0.85	8.7	27.28	33.0	-5.7	
High Ch								
1909.80	16.48	V	0.85	8.2	23.83	33.0	-9.2	
1909.80	20.80	H	0.85	8.2	28.15	33.0	-4.9	

Rev. 3.17.11
Note: For Band 4 EIRP limit is 30dBm

This report shall not be reproduced except in full, without the written approval of UL Verification Services Inc.

Band

GSM850

EGPRS

High Frequency Substitution Measurement
Compliance Certification Services Chamber B

Company: LG
Project #: 14U17849
Date: 05/22/14
Test Engineer: Charles Vergonio
Configuration: EUT, Y Position
Mode: EGRPS 850MHz

Test Equipment:
Receiving: Sunol T243, and 3m Chamber N-type Cable (Setup this one for testing EUT)
Substitution: Dipole S/N: 00022117, 4ft SMA Cable (SN # 245200 001) Warehouse.

f MHz	SG reading (dBm)	Ant. Pol. (H/V)	Cable Loss (dB)	Antenna Gain (dBd)	ERP (dBm)	Limit (dBm)	Margin (dB)	Notes
Low Ch								
824.20	19.84	V	0.9	0.0	18.94	38.5	-19.5	
824.20	25.04	H	0.9	0.0	24.14	38.5	-14.3	
Mid Ch								
836.60	19.55	V	0.9	0.0	18.65	38.5	-19.8	
836.60	25.09	H	0.9	0.0	24.19	38.5	-14.3	
High Ch								
848.80	19.11	V	0.9	0.0	18.21	38.5	-20.2	
848.80	25.50	H	0.9	0.0	24.60	38.5	-13.8	

Rev. 3.17.11

This report shall not be reproduced except in full, without the written approval of UL Verification Services Inc.

Band

GSM850

GPRS

High Frequency Substitution Measurement
Compliance Certification Services Chamber B

Company: LG
Project #: 14U17849
Date: 05/22/14
Test Engineer: Charles Vergonio
Configuration: EUT, Y Position
Mode: GRPS 850MHz

Test Equipment:
Receiving: Sunol T243, and 3m Chamber N-type Cable (Setup this one for testing EUT)
Substitution: Dipole S/N: 00022117, 4ft SMA Cable (SN # 245200 001) Warehouse.

f MHz	SG reading (dBm)	Ant. Pol. (H/V)	Cable Loss (dB)	Antenna Gain (dBd)	ERP (dBm)	Limit (dBm)	Margin (dB)	Notes
Low Ch								
824.20	21.00	V	0.9	0.0	20.10	38.5	-18.3	
824.20	28.27	H	0.9	0.0	27.37	38.5	-11.1	
Mid Ch								
836.60	21.08	V	0.9	0.0	20.18	38.5	-18.3	
836.60	29.17	H	0.9	0.0	28.27	38.5	-10.2	
High Ch								
848.80	20.21	V	0.9	0.0	19.31	38.5	-19.1	
848.80	29.64	H	0.9	0.0	28.74	38.5	-9.7	

Rev. 3.17.11

This report shall not be reproduced except in full, without the written approval of UL Verification Services Inc.

EVDOR 0

BC10

High Frequency Substitution Measurement
UL Verification Services, Inc. Chamber D

Company: LG Electronics
Project #: 14U17849
Date: 6\5\14
Test Engineer: D. Soper
Configuration: EUT
Mode: CDMA EVDOR0 BC0

Test Equipment:
Receiving: Sunol T130, and 3m Chamber D N-type Cable (Setup this one for testing EUT)
Substitution: Dipole S/N: 00022724, 4ft SMA Cable Warehouse.

f MHz	SG reading (dBm)	Ant. Pol. (H/V)	Cable Loss (dB)	Antenna Gain (dBd)	ERP (dBm)	Limit (dBm)	Margin (dB)	Notes
Low Ch								
817.90	13.56	V	2.5	0.0	11.06	38.5	-27.4	
817.90	22.87	H	2.5	0.0	20.37	38.5	-18.1	
Mid Ch								
820.50	13.55	V	2.5	0.0	11.05	38.5	-27.4	
820.50	24.35	H	2.5	0.0	21.85	38.5	-16.6	
High Ch								
823.10	13.11	V	2.5	0.0	10.61	38.5	-27.8	
823.10	25.37	H	2.5	0.0	22.87	38.5	-15.6	

Rev. 3.17.11
Note: For Band 13/17 ERP limit is 34.77dBm; For Band 26 limit is 50dBm

UL VERIFICATION SERVICES INC. FORM NO: CCSUP4701I
47173 BENICIA STREET, FREMONT, CA 94538, USA TEL: (510) 771-1000 FAX: (510) 661-0888

This report shall not be reproduced except in full, without the written approval of UL Verification Services Inc.

RTT

BC10

High Frequency Substitution Measurement
Compliance Certification Services Chamber D

Company: LG Electronics
Project #: 14U17849
Date: 6\5\14
Test Engineer: D. Soper
Configuration: EUT
Mode: CDMA RTT BC10

Test Equipment:
Receiving: Sunol T136, and Chamber D Cable (Setup this one for testing EUT)
Substitution: Dipole S/N: 00022724, 4ft SMA Cable Warehouse.

f MHz	SG reading (dBm)	Ant. Pol. (H/V)	Cable Loss (dB)	Antenna Gain (dBd)	ERP (dBm)	Limit (dBm)	Margin (dB)	Notes
Low Ch								
817.90	18.90	V	2.5	0.0	16.40	38.5	-22.0	
817.90	25.16	H	2.5	0.0	22.66	38.5	-15.8	
Mid Ch								
820.50	19.05	V	2.5	0.0	16.55	38.5	-21.9	
820.50	24.54	H	2.5	0.0	22.04	38.5	-16.4	
High Ch								
823.10	18.88	V	2.5	0.0	16.38	38.5	-22.1	
823.10	25.25	H	2.5	0.0	22.75	38.5	-15.7	

Rev. 3.17.11

UL VERIFICATION SERVICES INC. FORM NO: CCSUP4701I
47173 BENICIA STREET, FREMONT, CA 94538, USA TEL: (510) 771-1000 FAX: (510) 661-0888

This report shall not be reproduced except in full, without the written approval of UL Verification Services Inc.

EVDOR0

BC0

High Frequency Substitution Measurement
UL Verification Services, Inc. Chamber F

Company: LG
Project #: 14U17849
Date: 5\31\14
Test Engineer: Charles Vergonio
Configuration: EUT, Y Position
Mode: CDMA EVDOR0 BC0

Test Equipment:
Receiving: Sunol T122, and 3m Chamber F N-type Cable (Setup this one for testing EUT)
Substitution: Dipole S/N: 00022724, 4ft SMA Cable (SN # 244640 002) Warehouse.

f MHz	SG reading (dBm)	Ant. Pol. (H/V)	Cable Loss (dB)	Antenna Gain (dBd)	ERP (dBm)	Limit (dBm)	Margin (dB)	Notes
Low Ch								
824.70	20.95	V	0.5	0.0	20.50	38.5	-17.9	
824.70	11.89	H	0.5	0.0	11.44	38.5	-27.0	
Mid Ch								
836.52	20.62	V	0.5	0.0	20.17	38.5	-18.3	
836.52	12.02	H	0.5	0.0	11.57	38.5	-26.9	
High Ch								
848.31	20.60	V	0.5	0.0	20.15	38.5	-18.3	
848.31	11.23	H	0.5	0.0	10.78	38.5	-27.7	

Rev. 3.17.11
Note: For Band 13/17 ERP limit is 34.77dBm; For Band 26 limit is 50dBm

UL VERIFICATION SERVICES INC. FORM NO: CCSUP4701I
47173 BENICIA STREET, FREMONT, CA 94538, USA TEL: (510) 771-1000 FAX: (510) 661-0888

This report shall not be reproduced except in full, without the written approval of UL Verification Services Inc.

RTT

BC0

High Frequency Substitution Measurement
UL Verification Services, Inc. Chamber F

Company: LG
Project #: 14U17849
Date: 5\31\14
Test Engineer: Charles Vergonio
Configuration: EUT, Y Position
Mode: CDMA RTT BC0

Test Equipment:
Receiving: Sunol T122, and 3m Chamber F N-type Cable (Setup this one for testing EUT)
Substitution: Dipole S/N: 00022724, 4ft SMA Cable (SN # 244640 002) Warehouse.

f MHz	SG reading (dBm)	Ant. Pol. (H/V)	Cable Loss (dB)	Antenna Gain (dBd)	ERP (dBm)	Limit (dBm)	Margin (dB)	Notes
Low Ch								
824.70	21.48	V	0.5	0.0	21.03	38.5	-17.4	
824.70	9.61	H	0.5	0.0	9.16	38.5	-29.3	
Mid Ch								
836.52	20.95	V	0.5	0.0	20.50	38.5	-17.9	
836.52	9.11	H	0.5	0.0	8.66	38.5	-29.8	
High Ch								
848.31	21.18	V	0.5	0.0	20.73	38.5	-17.7	
848.31	9.51	H	0.5	0.0	9.06	38.5	-29.4	

Rev. 3.17.11
Note: For Band 13/17 ERP limit is 34.77dBm; For Band 26 limit is 50dBm

UL VERIFICATION SERVICES INC. FORM NO: CCSUP4701I
47173 BENICIA STREET, FREMONT, CA 94538, USA TEL: (510) 771-1000 FAX: (510) 661-0888

This report shall not be reproduced except in full, without the written approval of UL Verification Services Inc.

EVDOR 0

BC1

High Frequency Fundamental Measurement
Compliance Certification Services Chamber F

Company: LG
Project #: 14U17849
Date: 5\31\14
Test Engineer: Charles Vergonio
Configuration: EUT, Z Position
Mode: CDMA EVDOR0 BC1

Test Equipment:
Receiving: T120, and Chamber F SMA Cables
Substitution: Horn T59 Substitution, 4ft SMA Cable (244640002) Warehouse

f GHz	SG reading (dBm)	Ant. Pol. (H/V)	Cable Loss (dB)	Antenna Gain (dBi)	EIRP (dBm)	Limit (dBm)	Delta (dB)	Notes
Low Ch								
1.851	9.8	V	0.67	7.90	17.01	33.0	-16.0	
1.851	15.0	H	0.67	7.90	22.26	33.0	-10.7	
Mid Ch								
1.880	9.2	V	0.67	7.90	16.39	33.0	-16.6	
1.880	15.7	H	0.67	7.90	22.88	33.0	-10.1	
High Ch								
1.909	9.0	V	0.67	7.80	16.10	33.0	-16.9	
1.909	15.4	H	0.67	7.80	22.49	33.0	-10.5	

Rev. 3.17.11

UL VERIFICATION SERVICES INC. FORM NO: CCSUP4701I
47173 BENICIA STREET, FREMONT, CA 94538, USA TEL: (510) 771-1000 FAX: (510) 661-0888

This report shall not be reproduced except in full, without the written approval of UL Verification Services Inc.

RTT

BC1

High Frequency Substitution Measurement
UL Verification Services, Inc. Chamber F

Company: LG
Project #: 14U17849
Date: 5\31\14
Test Engineer: Charles Vergonio
Configuration: EUT, Z Position
Mode: CDMA RTT BC1

Test Equipment:
Receiving: Horn T120, and Chamber F SMA Cables
Substitution: Horn T59 Substitution, 4ft SMA Cable Warehouse

f MHz	SG reading (dBm)	Ant. Pol. (H/V)	Cable Loss (dB)	Antenna Gain (dBd)	EIRP (dBm)	Limit (dBm)	Margin (dB)	Notes
Low Ch								
1851.25	11.78	V	0.6	7.9	19.06	33.0	-13.9	
1851.25	15.65	H	0.6	7.9	22.93	33.0	-10.1	
Mid Ch								
1880.00	10.42	V	0.6	7.9	17.70	33.0	-15.3	
1880.00	15.80	H	0.6	7.9	23.08	33.0	-9.9	
High Ch								
1908.75	10.09	V	0.7	7.8	17.24	33.0	-15.8	
1908.75	15.79	H	0.7	7.8	22.94	33.0	-10.1	

Rev. 3.17.11
Note: For Band 4 EIRP limit is 30dBm

UL VERIFICATION SERVICES INC. FORM NO: CCSUP4701I
47173 BENICIA STREET, FREMONT, CA 94538, USA TEL: (510) 771-1000 FAX: (510) 661-0888

This report shall not be reproduced except in full, without the written approval of UL Verification Services Inc.

9.3. WPC Back cover test data

LTE
B25
16QAM

High Frequency Fundamental Measurement
Compliance Certification Services Chamber B

Company: LG
Project #: 14U17849
Date: 06/02/14
Test Engineer: D. Soper
Configuration: EUT / Wireless Charger
Mode: LTE band 25, 3MHz BW
16QAM

Test Equipment:
Receiving: Horn T345, and Chamber B SMA Cables
Substitution: Horn T59 Substitution, 4ft SMA Cable Warehouse

f GHz	SG reading (dBm)	Ant. Pol. (H/V)	Cable Loss (dB)	Antenna Gain (dBi)	EIRP (dBm)	Limit (dBm)	Delta (dB)	Notes
Low Ch								
1.852		V	0.85	7.85		33.0		
1.852		H	0.85	7.85		33.0		
Mid Ch								
1.883	14.5	V	0.85	7.85	21.48	33.0	-11.5	
1.883	8.7	H	0.85	7.85	15.70	33.0	-17.3	
High Ch								
1.914		V	0.85	7.85		33.0		
1.914		H	0.85	7.85		33.0		

Rev. 3.17.11
Note: For Band 4 EIRP limit is 30dBm

This report shall not be reproduced except in full, without the written approval of UL Verification Services Inc.

LTE
B25
QPSK

High Frequency Fundamental Measurement
Compliance Certification Services Chamber B

Company: LG
Project #: 14U17849
Date: 06/02/14
Test Engineer: D. Soper
Configuration: EUT / Wireless Charger
Mode: LTE band 25, 3MHz BW
QPSK, Average, RB1-0 / Y Orientation

Test Equipment:
Receiving: Horn T345, and Chamber B SMA Cables
Substitution: Horn T59 Substitution, 4ft SMA Cable Warehouse

f GHz	SG reading (dBm)	Ant. Pol. (H/V)	Cable Loss (dB)	Antenna Gain (dBi)	EIRP (dBm)	Limit (dBm)	Delta (dB)	Notes
Low Ch								
1.852		V	0.85	7.85		33.0		
1.852		H	0.85	7.85		33.0		
Mid Ch								
1.883	15.7	V	0.85	7.85	22.70	33.0	-10.3	
1.883	10.5	H	0.85	7.85	17.50	33.0	-15.5	
High Ch								
1.914		V	0.85	7.85		33.0		
1.914		H	0.85	7.85		33.0		

Rev. 3.17.11
Note: For Band 4 EIRP limit is 30dBm

UL VERIFICATION SERVICES INC. FORM NO: CCSUP4701I
47173 BENICIA STREET, FREMONT, CA 94538, USA TEL: (510) 771-1000 FAX: (510) 661-0888

This report shall not be reproduced except in full, without the written approval of UL Verification Services Inc.

LTE
B26
16QAM

High Frequency Substitution Measurement
Compliance Certification Services Chamber C

Company: LG
Project #: 14U17849
Date: 05/29/14
Test Engineer: D. Soper
Configuration: EUT / wireless charger
Mode: LTE band 26, 5MHz BW
16QAM, Average, RB1-0

Test Equipment:
Receiving: Sunol T407, and 3m Chamber N-type Cable (Setup this one for testing EUT)
Substitution: Dipole S/N: 00022117, 4ft SMA Cable (SN # 245200 001) Warehouse.

f MHz	SG reading (dBm)	Ant. Pol. (H/V)	Cable Loss (dB)	Antenna Gain (dBd)	ERP (dBm)	Limit (dBm)	Margin (dB)	Notes
Low Ch								
816.50		V	0.9	0.0		38.5		
816.50		H	0.9	0.0		38.5		
Mid Ch								
831.50	11.25	V	0.9	0.0	10.35	38.5	-28.1	
831.50	19.81	H	0.9	0.0	18.92	38.5	-19.5	
High Ch								
846.50		V	0.9	0.0		38.5		
846.50		H	0.9	0.0		38.5		

Rev. 3.17.11
Note: For Band 13/17 ERP limit is 34.77dBm; For Band 26 limit is 50dBm

UL VERIFICATION SERVICES INC. FORM NO: CCSUP4701I
47173 BENICIA STREET, FREMONT, CA 94538, USA TEL: (510) 771-1000 FAX: (510) 661-0888

This report shall not be reproduced except in full, without the written approval of UL Verification Services Inc.

LTE
B26
QPSK

High Frequency Substitution Measurement
Compliance Certification Services Chamber C

Company: LG
Project #: 14U17849
Date: 05/29/14
Test Engineer: D. Soper
Configuration: EUT / wireless charger
Mode: LTE band 26, 5MHz BW
QPSK, Average, RB1-0

Test Equipment:
Receiving: Sunol T407, and 3m Chamber N-type Cable (Setup this one for testing EUT)
Substitution: Dipole S/N: 00022117, 4ft SMA Cable (SN # 245200 001) Warehouse.

f MHz	SG reading (dBm)	Ant. Pol. (H/V)	Cable Loss (dB)	Antenna Gain (dBd)	ERP (dBm)	Limit (dBm)	Margin (dB)	Notes
Low Ch								
816.50		V	0.9	0.0		38.5		
816.50		H	0.9	0.0		38.5		
Mid Ch								
831.50	12.37	V	0.9	0.0	11.47	38.5	-27.0	
831.50	20.19	H	0.9	0.0	19.30	38.5	-19.2	
High Ch								
846.50		V	0.9	0.0		38.5		
846.50		H	0.9	0.0		38.5		

Rev. 3.17.11
Note: For Band 13/17 ERP limit is 34.77dBm; For Band 26 limit is 50dBm

This report shall not be reproduced except in full, without the written approval of UL Verification Services Inc.

LTE
B41
16QAM

High Frequency Substitution Measurement
UL Verification Services, Inc. Chamber B

Company: LG Electronics
Project #: 14U17501
Date: 5/30/14
Test Engineer: D. Soper
Configuration: EUT ONLY / Y-orientation
Mode: LTE B41 10MHz 16QAM

Test Equipment:
Receiving: Horn T119, and Chamber B SMA Cables
Substitution: Horn T60 Substitution, 4ft SMA Cable Warehouse

f MHz	SG reading (dBm)	Ant. Pol. (H/V)	Cable Loss (dB)	Antenna Gain (dBi)	EIRP (dBm)	Limit (dBm)	Margin (dB)	Notes
Low Ch								
2501.00		V	0.9	9.5		33.0		
2501.00		H	0.9	9.5		33.0		
Mid Ch								
2593.00	11.94	V	0.9	9.5	20.59	33.0	-12.4	
2593.00	9.90	H	0.9	9.5	18.55	33.0	-14.5	
High Ch								
2685.00		V	0.9	9.6		33.0		
2685.00		H	0.9	9.6		33.0		

Rev. 3.17.11
Note: For Band 4 EIRP limit is 30dBm

UL VERIFICATION SERVICES INC. FORM NO: CCSUP4701I
47173 BENICIA STREET, FREMONT, CA 94538, USA TEL: (510) 771-1000 FAX: (510) 661-0888

This report shall not be reproduced except in full, without the written approval of UL Verification Services Inc.

LTE
B41
QPSK

High Frequency Substitution Measurement
UL Verification Services, Inc. Chamber B

Company: LG Electronics
Project #: 14U17501
Date: 5/30/14
Test Engineer: D. Soper
Configuration: EUT ONLY / Y-orientation
Mode: LTE B41 10MHz QPSK

Test Equipment:
Receiving: Horn T119, and Chamber B SMA Cables
Substitution: Horn T60 Substitution, 4ft SMA Cable Warehouse

f MHz	SG reading (dBm)	Ant. Pol. (H/V)	Cable Loss (dB)	Antenna Gain (dBi)	EIRP (dBm)	Limit (dBm)	Margin (dB)	Notes
Low Ch								
2501.00		V	0.9	9.5		33.0		
2501.00		H	0.9	9.5		33.0		
Mid Ch								
2593.00	13.20	V	0.9	9.5	21.85	33.0	-11.2	
2593.00	11.10	H	0.9	9.5	19.75	33.0	-13.3	
High Ch								
2685.00		V	0.9	9.6		33.0		
2685.00		H	0.9	9.6		33.0		

Rev. 3.17.11
Note: For Band 4 EIRP limit is 30dBm

UL VERIFICATION SERVICES INC. FORM NO: CCSUP4701I
47173 BENICIA STREET, FREMONT, CA 94538, USA TEL: (510) 771-1000 FAX: (510) 661-0888

This report shall not be reproduced except in full, without the written approval of UL Verification Services Inc.

WCDMA B2

High Frequency Fundamental Measurement
Compliance Certification Services Chamber E

Company: LG
Project #: 14U17849
Date: 06/02/14
Test Engineer: R. Alegre
Configuration: EUT ONLY
Mode: REL 99 B2 1900Mhz

Test Equipment:
Receiving: T346, and Chamber E SMA Cables
Substitution: Horn T59 Substitution, 4ft SMA Cable (244639001) Warehouse

f MHz	SG reading (dBm)	Ant. Pol. (H/V)	Cable Loss (dB)	Antenna Gain (dBi)	EIRP (dBm)	Limit (dBm)	Delta (dB)	Notes
Low Ch								
Mid Ch								
1880.00	12.1	V	0.85	7.85	19.09	33.0	-13.9	
1880.00	14.0	H	0.85	7.85	21.03	33.0	-12.0	
High Ch								

Rev. 3.17.11

UL VERIFICATION SERVICES INC. FORM NO: CCSUP4701I
47173 BENICIA STREET, FREMONT, CA 94538, USA TEL: (510) 771-1000 FAX: (510) 661-0888

This report shall not be reproduced except in full, without the written approval of UL Verification Services Inc.

WCDMA B5

High Frequency Substitution Measurement
UL Verification Services, Inc. Chamber F

Company: LG
Project #: 14U17849
Date: 06/02/14
Test Engineer: R. Alegre
Configuration: EUT, Y Position
Mode: WCDMA_REL99_850

Test Equipment:
Receiving: Sunol T408, and 5m F Chamber N-type Cable (Setup this one for testing EUT)
Substitution: Dipole S/N: 00022117, 4ft SMA Cable (SN # 245200 001) Warehouse.

f MHz	SG reading (dBm)	Ant. Pol. (H/V)	Cable Loss (dB)	Antenna Gain (dBd)	ERP (dBm)	Limit (dBm)	Margin (dB)	Notes
Low Ch								
Mid Ch								
836.60	14.94	V	0.9	0.0	14.04	38.5	-24.4	
836.60	21.53	H	0.9	0.0	20.63	38.5	-17.8	
High Ch								

Rev. 3.17.11
Note: For Band 13/17 ERP limit is 34.77dBm; For Band 26 limit is 50dBm

UL VERIFICATION SERVICES INC. FORM NO: CCSUP4701I
47173 BENICIA STREET, FREMONT, CA 94538, USA TEL: (510) 771-1000 FAX: (510) 661-0888

This report shall not be reproduced except in full, without the written approval of UL Verification Services Inc.

GSM 1900

High Frequency Substitution Measurement
UL Verification Services, Inc. Chamber E

Company: LG
Project #: 14U17849
Date: 06/02/14
Test Engineer: R. Alegre
Configuration: EUT only, Y position
Mode: GPRS 1900MHz

Test Equipment:
Receiving: Horn T346, and Chamber E SMA Cables
Substitution: Horn T59 Substitution, 4ft SMA Cable Warehouse

f MHz	SG reading (dBm)	Ant. Pol. (H/V)	Cable Loss (dB)	Antenna Gain (dBd)	EIRP (dBm)	Limit (dBm)	Margin (dB)	Notes
Low Ch								
Mid Ch								
1880.00	13.63	V	0.85	7.9	20.63	33.0	-12.4	
1880.00	18.88	H	0.85	7.9	25.88	33.0	-7.1	
High Ch								

Rev. 3.17.11
Note: For Band 4 EIRP limit is 30dBm

UL VERIFICATION SERVICES INC. FORM NO: CCSUP4701I
47173 BENICIA STREET, FREMONT, CA 94538, USA TEL: (510) 771-1000 FAX: (510) 661-0888

This report shall not be reproduced except in full, without the written approval of UL Verification Services Inc.

GSM 850

High Frequency Substitution Measurement
Compliance Certification Services Chamber E

Company: LG
Project #: 14U17849
Date: 06/02/14
Test Engineer: R. Alegre
Configuration: EUT, Y Position
Mode: GRPS 850MHz

Test Equipment:
Receiving: Sunol T408, and Chamber E N-type Cable (Setup this one for testing EUT)
Substitution: Dipole S/N: 00022117, 4ft SMA Cable (SN # 245200 001) Warehouse.

f MHz	SG reading (dBm)	Ant. Pol. (H/V)	Cable Loss (dB)	Antenna Gain (dBd)	ERP (dBm)	Limit (dBm)	Margin (dB)	Notes
Low Ch								
Mid Ch								
836.60	20.41	V	0.9	0.0	19.51	38.5	-18.9	
836.60	28.67	H	0.9	0.0	27.77	38.5	-10.7	
High Ch								

Rev. 3.17.11

This report shall not be reproduced except in full, without the written approval of UL Verification Services Inc.

BC0
RTT

High Frequency Substitution Measurement
UL Verification Services, Inc. Chamber F

Company: LG
Project #: 14U17849
Date: 5\31\14
Test Engineer: Charles Vergonio
Configuration: EUT, Y Position / Wireless Charger
Mode: CDMA RTT BC0

Test Equipment:
Receiving: Sunol T122, and 3m Chamber F N-type Cable (Setup this one for testing EUT)
Substitution: Dipole S/N: 00022724, 4ft SMA Cable (SN # 244640 002) Warehouse.

f MHz	SG reading (dBm)	Ant. Pol. (H/V)	Cable Loss (dB)	Antenna Gain (dBd)	ERP (dBm)	Limit (dBm)	Margin (dB)	Notes
Mid Ch								
836.52	20.67	V	0.5	0.0	20.22	38.5	-18.2	
836.52	8.69	H	0.5	0.0	8.24	38.5	-30.2	

Rev. 3.17.11
Note: For Band 13/17 ERP limit is 34.77dBm; For Band 26 limit is 50dBm

UL VERIFICATION SERVICES INC. FORM NO: CCSUP4701I
47173 BENICIA STREET, FREMONT, CA 94538, USA TEL: (510) 771-1000 FAX: (510) 661-0888

This report shall not be reproduced except in full, without the written approval of UL Verification Services Inc.

BC1
RTT

High Frequency Substitution Measurement
UL Verification Services, Inc. Chamber F

Company: LG
Project #: 14U17849
Date: 5\31\14
Test Engineer: Charles Vergonio
Configuration: EUT, Z Position/ Wireless Charger
Mode: CDMA RTT BC1

Test Equipment:
Receiving: Horn T120, and Chamber F SMA Cables
Substitution: Horn T59 Substitution, 4ft SMA Cable Warehouse

f MHz	SG reading (dBm)	Ant. Pol. (H/V)	Cable Loss (dB)	Antenna Gain (dBd)	EIRP (dBm)	Limit (dBm)	Margin (dB)	Notes
Mid Ch								
1880.00	10.19	V	0.6	7.9	17.47	33.0	-15.5	
1880.00	15.33	H	0.6	7.9	22.61	33.0	-10.4	

Rev. 3.17.11
Note: For Band 4 EIRP limit is 30dBm

UL VERIFICATION SERVICES INC. FORM NO: CCSUP4701I
47173 BENICIA STREET, FREMONT, CA 94538, USA TEL: (510) 771-1000 FAX: (510) 661-0888

This report shall not be reproduced except in full, without the written approval of UL Verification Services Inc.

BC10
RTT

High Frequency Substitution Measurement
Compliance Certification Services Chamber A

Company: LG Electronics
Project #: 14U17849
Date: 6\5\14
Test Engineer: D. Soper
Configuration: EUT
Mode: CDMA RTT BC10

Test Equipment:
Receiving: Sunol T136, and Chamber A Cable (Setup this one for testing EUT)
Substitution: Dipole S/N: 00022724, 4ft SMA Cable Warehouse.

f MHz	SG reading (dBm)	Ant. Pol. (H/V)	Cable Loss (dB)	Antenna Gain (dBd)	ERP (dBm)	Limit (dBm)	Margin (dB)	Notes
Low Ch								
817.90		V	0.5	0.0		38.5		
817.90		H	0.5	0.0		38.5		
Mid Ch								
820.50	20.00	V	2.5	0.0	17.50	38.5	-20.9	
820.50	23.37	H	2.5	0.0	20.87	38.5	-17.6	
High Ch								
823.10		V	0.5	0.0		38.5		
823.10		H	0.5	0.0		38.5		

Rev. 3.17.11

UL VERIFICATION SERVICES INC. FORM NO: CCSUP4701I
47173 BENICIA STREET, FREMONT, CA 94538, USA TEL: (510) 771-1000 FAX: (510) 661-0888

This report shall not be reproduced except in full, without the written approval of UL Verification Services Inc.

9.2. FIELD STRENGTH OF SPURIOUS RADIATION

RULE PART(S)

FCC: §2.1053, §22.917, §24.238, and §90.691

LIMIT

§22.917 (e) and §24.238 (a): Out of band emissions. The power of any emission outside of the authorized operating frequency ranges must be attenuated below the transmitting power (P) by a factor of at least 43 + 10 log (P) dB

§ 90.691 Emission mask requirements for EA-based systems.

(a) Out-of-band emission requirement shall apply only to the “outer” channels included in an EA license and to spectrum adjacent to interior channels used by incumbent licensees. The emission limits are as follows:

(1) For any frequency removed from the EA licensee's frequency block by up to and including 37.5 kHz, the power of any emission shall be attenuated below the transmitter power (P) in watts by at least 116 Log10 (f/6.1) decibels or 50 + 10 Log10 (P) decibels or 80 decibels, whichever is the lesser attenuation, where f is the frequency removed from the center of the outer channel in the block in kilohertz and where f is greater than 12.5 kHz.

(2) For any frequency removed from the EA licensee's frequency block greater than 37.5 kHz, the power of any emission shall be attenuated below the transmitter power (P) in watts by at least 43 + 10Log10 (P) decibels or 80 decibels, whichever is the lesser attenuation, where f is the frequency removed from the center of the outer channel in the block in kilohertz and where f is greater than 37.5 kHz.

(b) When an emission outside of the authorized bandwidth causes harmful interference, the Commission may, at its discretion, require greater attenuation than specified in this section.

RESULTS

This report shall not be reproduced except in full, without the written approval of UL Verification Services Inc.

9.2.1. SPURIOUS RADIATION DATA

Compliance Certification Services
Above 1GHz High Frequency Substitution Measurement

Company: LG Electronics
Project #: 14U17849
Date: 06/02/14
Test Engineer: D. Soper
Configuration: EUT / AC Adapter
Mode: LTE B41 20M 16QAM HARM

Chamber	Pre-amplifer	Filter	Limit
5m Chamber A	T145 8449B	Filter 1	

Band

LTE41

20MHz

16QAM

f GHz	SG reading (dBm)	Ant. Pol. (H/V)	Distance (m)	Preamp (dB)	Filter (dB)	ERP (dBm)	Limit (dBm)	Delta (dB)	Notes
Low Ch, (2506 MHz)									
5.012	-31.7	V	3.0	28.9	1.0	-59.6	-25.0	-34.6	
7.518	-35.5	V	3.0	26.3	1.0	-60.9	-25.0	-35.9	
10.553	-34.4	V	3.0	22.9	1.0	-56.3	-25.0	-31.3	
5.012	-27.2	H	3.0	28.9	1.0	-55.1	-25.0	-30.1	
7.518	-34.1	H	3.0	26.3	1.0	-59.4	-25.0	-34.4	
10.553	-33.5	H	3.0	22.9	1.0	-55.4	-25.0	-30.4	
Mid Ch, (2593 MHz)									
5.186	-22.6	V	3.0	28.7	1.0	-50.4	-25.0	-25.4	
7.779	-34.9	V	3.0	26.0	1.0	-59.9	-25.0	-34.9	
10.372	-34.1	V	3.0	23.0	1.0	-56.1	-25.0	-31.1	
5.186	-21.3	H	3.0	28.7	1.0	-49.1	-25.0	-24.1	
7.779	-33.8	H	3.0	26.0	1.0	-58.8	-25.0	-33.8	
10.372	-33.1	H	3.0	23.0	1.0	-55.1	-25.0	-30.1	
High Ch, (2680 MHz)									
5.360	-17.6	V	3.0	28.5	1.0	-45.2	-25.0	-20.2	
8.040	-24.5	V	3.0	25.6	1.0	-49.1	-25.0	-24.1	
10.720	-34.4	V	3.0	22.9	1.0	-56.3	-25.0	-31.3	
5.360	-16.1	H	3.0	28.5	1.0	-43.6	-25.0	-18.6	
8.040	-23.6	H	3.0	25.6	1.0	-48.2	-25.0	-23.2	
10.720	-33.0	H	3.0	22.9	1.0	-54.9	-25.0	-29.9	

Rev. 03.03.09

This report shall not be reproduced except in full, without the written approval of UL Verification Services Inc.

Compliance Certification Services
Above 1GHz High Frequency Substitution Measurement

Company: LG Electronics
Project #: 14U17849
Date: 06/02/14
Test Engineer: D. Soper
Configuration: EUT / AC Adapter
Mode: LTE B41 20M QPSK HARM

Chamber	Pre-amplifer	Filter	Limit
5m Chamber A	T145 8449B	Filter 1	

Band: LTE41 20MHz QPSK

f GHz	SG reading (dBm)	Ant. Pol. (H/V)	Distance (m)	Preamp (dB)	Filter (dB)	ERP (dBm)	Limit (dBm)	Delta (dB)	Notes
Low Ch, (2506 MHz)									
5.012	-32.2	V	3.0	28.9	1.0	-60.1	-25.0	-35.1	
7.518	-35.3	V	3.0	26.3	1.0	-60.6	-25.0	-35.6	
10.553	-34.2	V	3.0	22.9	1.0	-56.1	-25.0	-31.1	
5.012	-27.0	H	3.0	28.9	1.0	-54.9	-25.0	-29.9	
7.518	-34.7	H	3.0	26.3	1.0	-60.0	-25.0	-35.0	
10.553	-33.6	H	3.0	22.9	1.0	-55.6	-25.0	-30.6	
Mid Ch, (2593 MHz)									
5.186	-22.7	V	3.0	28.7	1.0	-50.4	-25.0	-25.4	
7.779	-35.0	V	3.0	26.0	1.0	-60.0	-25.0	-35.0	
10.372	-34.0	V	3.0	23.0	1.0	-56.0	-25.0	-31.0	
5.186	-20.5	H	3.0	28.7	1.0	-48.2	-25.0	-23.2	
7.779	-34.0	H	3.0	26.0	1.0	-59.0	-25.0	-34.0	
10.372	-33.4	H	3.0	23.0	1.0	-55.3	-25.0	-30.3	
High Ch, (2680 MHz)									
5.360	-17.8	V	3.0	28.5	1.0	-45.3	-25.0	-20.3	
8.040	-24.4	V	3.0	25.6	1.0	-49.0	-25.0	-24.0	
10.720	-34.2	V	3.0	22.9	1.0	-56.1	-25.0	-31.1	
5.360	-16.0	H	3.0	28.5	1.0	-43.6	-25.0	-18.6	
8.040	-23.5	H	3.0	25.6	1.0	-48.1	-25.0	-23.1	
10.720	-33.3	H	3.0	22.9	1.0	-55.2	-25.0	-30.2	

Rev. 03.03.09

This report shall not be reproduced except in full, without the written approval of UL Verification Services Inc.

Compliance Certification Services
Above 1GHz High Frequency Substitution Measurement

Company: LG
Project #: 14U17849
Date: 06/01/14
Test Engineer: R. Alegre
Configuration: EUT, w/AC Charger and headphones
Mode: TX, LTE band 41, 15MHz, 16QAM

Chamber	Pre-amplifer	Filter	Limit
5m Chamber A	T145 8449B	Filter 1	

Band
LTE41
15MHz
16QAM

f GHz	SG reading (dBm)	Ant. Pol. (H/V)	Distance (m)	Preamp (dB)	Filter (dB)	ERP (dBm)	Limit (dBm)	Delta (dB)	Notes
Low Ch, (2503.5 MHz)									
5.007	-25.9	V	3.0	28.9	1.0	-53.8	-25.0	-28.8	
7.511	-27.5	V	3.0	26.3	1.0	-52.8	-25.0	-27.8	
10.014	-27.6	V	3.0	23.1	1.0	-49.7	-25.0	-24.7	
5.007	-28.7	H	3.0	28.9	1.0	-56.6	-25.0	-31.6	
7.511	-27.6	H	3.0	26.3	1.0	-52.9	-25.0	-27.9	
10.014	-26.4	H	3.0	23.1	1.0	-48.5	-25.0	-23.5	
Mid Ch, (2593 MHz)									
5.186	-30.7	V	3.0	28.7	1.0	-58.4	-25.0	-33.4	
7.779	-28.2	V	3.0	26.0	1.0	-53.2	-25.0	-28.2	
10.372	-28.0	V	3.0	23.0	1.0	-50.0	-25.0	-25.0	
5.186	-29.0	H	3.0	28.7	1.0	-56.7	-25.0	-31.7	
7.779	-27.3	H	3.0	26.0	1.0	-52.3	-25.0	-27.3	
10.372	-26.6	H	3.0	23.0	1.0	-48.5	-25.0	-23.5	
High Ch, (2682.5 MHz)									
5.365	-25.4	V	3.0	28.5	1.0	-53.0	-25.0	-28.0	
8.052	-25.9	V	3.0	25.6	1.0	-50.5	-25.0	-25.5	
10.730	-25.6	V	3.0	22.9	1.0	-47.5	-25.0	-22.5	
5.365	-29.0	H	3.0	28.5	1.0	-56.5	-25.0	-31.5	
8.052	-24.7	H	3.0	25.6	1.0	-49.3	-25.0	-24.3	
10.730	-27.6	H	3.0	22.9	1.0	-49.5	-25.0	-24.5	

Rev. 03.03.09

UL VERIFICATION SERVICES INC. FORM NO: CCSUP4701I
47173 BENICIA STREET, FREMONT, CA 94538, USA TEL: (510) 771-1000 FAX: (510) 661-0888

This report shall not be reproduced except in full, without the written approval of UL Verification Services Inc.

Compliance Certification Services
Above 1GHz High Frequency Substitution Measurement

Company: LG
Project #: 14U17849
Date: 06/01/14
Test Engineer: R. Alegre
Configuration: EUT, w/AC Charger and headphones
Mode: TX, LTE band 41, 15MHz, QPSK

Chamber	Pre-amplifer	Filter	Limit
5m Chamber A	T145 8449B	Filter 1	

Band

LTE41

15MHz

QPSK

f GHz	SG reading (dBm)	Ant. Pol. (H/V)	Distance (m)	Preamp (dB)	Filter (dB)	ERP (dBm)	Limit (dBm)	Delta (dB)	Notes
Low Ch, (2503.5 MHz)									
5.007	-27.0	V	3.0	28.9	1.0	-54.9	-25.0	-29.9	
7.511	-28.6	V	3.0	26.3	1.0	-54.0	-25.0	-29.0	
10.014	-26.0	V	3.0	23.1	1.0	-48.1	-25.0	-23.1	
5.007	-28.8	H	3.0	28.9	1.0	-56.7	-25.0	-31.7	
7.511	-27.7	H	3.0	26.3	1.0	-53.0	-25.0	-28.0	
10.014	-26.2	H	3.0	23.1	1.0	-48.3	-25.0	-23.3	
Mid Ch, (2593 MHz)									
5.186	-30.1	V	3.0	28.7	1.0	-57.8	-25.0	-32.8	
7.779	-28.6	V	3.0	26.0	1.0	-53.6	-25.0	-28.6	
10.372	-28.0	V	3.0	23.0	1.0	-50.0	-25.0	-25.0	
5.186	-29.1	H	3.0	28.7	1.0	-56.9	-25.0	-31.9	
7.779	-26.8	H	3.0	26.0	1.0	-51.8	-25.0	-26.8	
10.372	-27.0	H	3.0	23.0	1.0	-49.0	-25.0	-24.0	
High Ch, (2682.5 MHz)									
5.365	-26.0	V	3.0	28.5	1.0	-53.5	-25.0	-28.5	
8.052	-26.0	V	3.0	25.6	1.0	-50.6	-25.0	-25.6	
10.730	-25.9	V	3.0	22.9	1.0	-47.8	-25.0	-22.8	
5.365	-29.6	H	3.0	28.5	1.0	-57.1	-25.0	-32.1	
8.052	-25.2	H	3.0	25.6	1.0	-49.8	-25.0	-24.8	
10.730	-27.5	H	3.0	22.9	1.0	-49.4	-25.0	-24.4	

Rev. 03.03.09

This report shall not be reproduced except in full, without the written approval of UL Verification Services Inc.

Compliance Certification Services
Above 1GHz High Frequency Substitution Measurement

Company: LG Electronics
Project #: 14U17849
Date: 06/02/14
Test Engineer: D. Soper
Configuration: EUT / AC Adapter
Mode: LTE B41 10M 16QAM HARM

Chamber	Pre-amplifer	Filter	Limit
5m Chamber A	T145 8449B	Filter 1	

Band: LTE41 10MHz 16QAM

f GHz	SG reading (dBm)	Ant. Pol. (H/V)	Distance (m)	Preamp (dB)	Filter (dB)	ERP (dBm)	Limit (dBm)	Delta (dB)	Notes
Low Ch, (2501 MHz)									
5.002	-28.7	V	3.0	28.9	1.0	-56.6	-25.0	-31.6	
7.503	-28.7	V	3.0	26.3	1.0	-54.0	-25.0	-29.0	
10.004	-25.8	V	3.0	23.1	1.0	-47.9	-25.0	-22.9	
5.002	-25.0	H	3.0	28.9	1.0	-52.9	-25.0	-27.9	
7.503	-28.8	H	3.0	26.3	1.0	-54.2	-25.0	-29.2	
10.004	-32.1	H	3.0	23.1	1.0	-54.2	-25.0	-29.2	
Mid Ch, (2593 MHz)									
5.186	-22.2	V	3.0	28.7	1.0	-50.0	-25.0	-25.0	
7.779	-27.9	V	3.0	26.0	1.0	-52.9	-25.0	-27.9	
10.372	-26.5	V	3.0	23.0	1.0	-48.5	-25.0	-23.5	
5.186	-19.4	H	3.0	28.7	1.0	-47.1	-25.0	-22.1	
7.779	-34.1	H	3.0	26.0	1.0	-59.1	-25.0	-34.1	
10.372	-33.3	H	3.0	23.0	1.0	-55.3	-25.0	-30.3	
High Ch, (2685 MHz)									
5.375	-14.2	V	3.0	28.5	1.0	-41.7	-25.0	-16.7	
8.055	-26.1	V	3.0	25.6	1.0	-50.8	-25.0	-25.8	
10.740	-34.8	V	3.0	22.9	1.0	-56.7	-25.0	-31.7	
5.375	-13.4	H	3.0	28.5	1.0	-41.0	-25.0	-16.0	
8.055	-34.1	H	3.0	25.6	1.0	-58.7	-25.0	-33.7	
10.740	-34.6	H	3.0	22.9	1.0	-56.4	-25.0	-31.4	

Rev. 03.03.09

This report shall not be reproduced except in full, without the written approval of UL Verification Services Inc.

Compliance Certification Services
Above 1GHz High Frequency Substitution Measurement

Company: LG Electronics
Project #: 14U17849
Date: 06/02/14
Test Engineer: D. Soper
Configuration: EUT / AC Adapter
Mode: LTE B41 10M QPSK HARM

Chamber	Pre-amplifer	Filter	Limit
5m Chamber A	T145 8449B	Filter 1	

Band: LTE41 10MHz QPSK

f GHz	SG reading (dBm)	Ant. Pol. (H/V)	Distance (m)	Preamp (dB)	Filter (dB)	ERP (dBm)	Limit (dBm)	Delta (dB)	Notes
Low Ch, (2501 MHz)									
5.002	-28.5	V	3.0	28.9	1.0	-56.4	-25.0	-31.4	
7.503	-28.6	V	3.0	26.3	1.0	-53.9	-25.0	-28.9	
10.004	-26.3	V	3.0	23.1	1.0	-48.4	-25.0	-23.4	
5.002	-25.0	H	3.0	28.9	1.0	-52.9	-25.0	-27.9	
7.503	-29.1	H	3.0	26.3	1.0	-54.4	-25.0	-29.4	
10.004	-32.1	H	3.0	23.1	1.0	-54.2	-25.0	-29.2	
Mid Ch, (2593 MHz)									
5.186	-21.1	V	3.0	28.7	1.0	-48.8	-25.0	-23.8	
7.779	-28.2	V	3.0	26.0	1.0	-53.2	-25.0	-28.2	
10.372	-26.6	V	3.0	23.0	1.0	-48.6	-25.0	-23.6	
5.186	-18.9	H	3.0	28.7	1.0	-46.7	-25.0	-21.7	
7.779	-34.1	H	3.0	26.0	1.0	-59.1	-25.0	-34.1	
10.372	-33.0	H	3.0	23.0	1.0	-55.0	-25.0	-30.0	
High Ch, (2685 MHz)									
5.375	-13.6	V	3.0	28.5	1.0	-41.2	-25.0	-16.2	
8.055	-25.8	V	3.0	25.6	1.0	-50.5	-25.0	-25.5	
10.740	-35.8	V	3.0	22.9	1.0	-57.7	-25.0	-32.7	
5.375	-12.7	H	3.0	28.5	1.0	-40.3	-25.0	-15.3	
8.055	-33.8	H	3.0	25.6	1.0	-58.4	-25.0	-33.4	
10.740	-34.7	H	3.0	22.9	1.0	-56.6	-25.0	-31.6	

Rev. 03.03.09

This report shall not be reproduced except in full, without the written approval of UL Verification Services Inc.

Compliance Certification Services
Above 1GHz High Frequency Substitution Measurement

Company: LG Electronics
Project #: 14U17849
Date: 06/01/14
Test Engineer: D. Soper
Configuration: EUT with AC CHARGER
Mode: LTE B26 10M 16QAM HARM

Chamber	Pre-amplifer	Filter	Limit
5m Chamber A	T145 8449B	Filter 1	

Band: LTE26 10MHz 16QAM

f GHz	SG reading (dBm)	Ant. Pol. (H/V)	Distance (m)	Preamp (dB)	Filter (dB)	ERP (dBm)	Limit (dBm)	Delta (dB)	Notes
Low Ch, (819MHz)									
1.638	-19.0	V	3.0	32.7	1.0	-50.6	-13.0	-37.6	
2.457	-22.3	V	3.0	31.3	1.0	-52.6	-13.0	-39.6	
3.276	-26.2	V	3.0	30.6	1.0	-55.8	-13.0	-42.8	
1.638	-26.7	H	3.0	32.7	1.0	-58.4	-13.0	-45.4	
2.457	-24.9	H	3.0	31.3	1.0	-55.2	-13.0	-42.2	
3.276	-27.7	H	3.0	30.6	1.0	-57.2	-13.0	-44.2	
Mid Ch, (831.5MHz)									
1.663	-22.6	V	3.0	32.6	1.0	-54.2	-13.0	-41.2	
2.495	-22.6	V	3.0	31.5	1.0	-53.0	-13.0	-40.0	
3.327	-26.2	V	3.0	30.5	1.0	-55.7	-13.0	-42.7	
1.663	-24.8	H	3.0	32.6	1.0	-56.5	-13.0	-43.5	
2.495	-24.7	H	3.0	31.5	1.0	-55.2	-13.0	-42.2	
3.327	-26.8	H	3.0	30.5	1.0	-56.3	-13.0	-43.3	
High Ch, (844MHz)									
1.688	-23.6	V	3.0	32.6	1.0	-55.2	-13.0	-42.2	
2.532	-22.6	V	3.0	31.5	1.0	-53.0	-13.0	-40.0	
3.376	-26.1	V	3.0	30.5	1.0	-55.6	-13.0	-42.6	
1.688	-24.7	H	3.0	32.6	1.0	-56.2	-13.0	-43.2	
2.532	-25.3	H	3.0	31.5	1.0	-55.8	-13.0	-42.8	
3.376	-27.0	H	3.0	30.5	1.0	-56.5	-13.0	-43.5	

Rev. 03.03.09

This report shall not be reproduced except in full, without the written approval of UL Verification Services Inc.

Compliance Certification Services
Above 1GHz High Frequency Substitution Measurement

Company: LG Electronics
Project #: 14U17849
Date: 06/01/14
Test Engineer: D. Soper
Configuration: EUT with AC CHARGER
Mode: LTE B26 10M QPSK HARM

Chamber	Pre-amplifer	Filter	Limit
5m Chamber A	T145 8449B	Filter 1	

Band
LTE26
10MHz
QPSK

f GHz	SG reading (dBm)	Ant. Pol. (H/V)	Distance (m)	Preamp (dB)	Filter (dB)	ERP (dBm)	Limit (dBm)	Delta (dB)	Notes
Low Ch, (829MHz)									
1.638	-18.4	V	3.0	32.7	1.0	-50.0	-13.0	-37.0	
2.457	-22.8	V	3.0	31.3	1.0	-53.0	-13.0	-40.0	
3.276	-26.3	V	3.0	30.6	1.0	-55.8	-13.0	-42.8	
1.638	-26.5	H	3.0	32.7	1.0	-58.2	-13.0	-45.2	
2.457	-24.9	H	3.0	31.3	1.0	-55.2	-13.0	-42.2	
3.276	-26.6	H	3.0	30.6	1.0	-56.2	-13.0	-43.2	
Mid Ch, (831.5MHz)									
1.663	-21.9	V	3.0	32.6	1.0	-53.5	-13.0	-40.5	
2.495	-22.1	V	3.0	31.5	1.0	-52.6	-13.0	-39.6	
3.327	-26.3	V	3.0	30.5	1.0	-55.9	-13.0	-42.9	
1.663	-24.5	H	3.0	32.6	1.0	-56.1	-13.0	-43.1	
2.495	-25.0	H	3.0	31.5	1.0	-55.5	-13.0	-42.5	
3.327	-26.7	H	3.0	30.5	1.0	-56.2	-13.0	-43.2	
High Ch, (844MHz)									
1.688	-22.9	V	3.0	32.6	1.0	-54.5	-13.0	-41.5	
2.532	-22.4	V	3.0	31.5	1.0	-52.9	-13.0	-39.9	
3.376	-26.4	V	3.0	30.5	1.0	-55.9	-13.0	-42.9	
1.688	-23.7	H	3.0	32.6	1.0	-55.2	-13.0	-42.2	
2.532	-24.8	H	3.0	31.5	1.0	-55.2	-13.0	-42.2	
3.376	-27.0	H	3.0	30.5	1.0	-56.5	-13.0	-43.5	

Rev. 03.03.09

This report shall not be reproduced except in full, without the written approval of UL Verification Services Inc.

Compliance Certification Services
Above 1GHz High Frequency Substitution Measurement

Company: LG Electronics
Project #: 14U17849
Date: 06/01/14
Test Engineer: D. Soper
Configuration: EUT with AC CHARGER
Mode: LTE B26 5M 16QAM HARM

Chamber	Pre-amplifer	Filter	Limit
5m Chamber A	T145 8449B	Filter 1	

Band: LTE26 5MHz 16QAM

f GHz	SG reading (dBm)	Ant. Pol. (H/V)	Distance (m)	Preamp (dB)	Filter (dB)	ERP (dBm)	Limit (dBm)	Delta (dB)	Notes
Low Ch, (816.5MHz)									
1.633	-23.2	V	3.0	32.7	1.0	-54.9	-13.0	-41.9	
2.450	-23.7	V	3.0	31.2	1.0	-53.9	-13.0	-40.9	
3.267	-26.5	V	3.0	30.6	1.0	-56.1	-13.0	-43.1	
1.633	-25.5	H	3.0	32.7	1.0	-57.2	-13.0	-44.2	
2.450	-24.8	H	3.0	31.2	1.0	-55.1	-13.0	-42.1	
3.267	-26.5	H	3.0	30.6	1.0	-56.0	-13.0	-43.0	
Mid Ch, (831.5MHz)									
1.663	-22.4	V	3.0	32.6	1.0	-54.0	-13.0	-41.0	
2.495	-22.9	V	3.0	31.5	1.0	-53.3	-13.0	-40.3	
3.327	-26.5	V	3.0	30.5	1.0	-56.0	-13.0	-43.0	
1.663	-22.5	H	3.0	32.6	1.0	-54.1	-13.0	-41.1	
2.495	-25.0	H	3.0	31.5	1.0	-55.5	-13.0	-42.5	
3.327	-26.8	H	3.0	30.5	1.0	-56.3	-13.0	-43.3	
High Ch, (846.5MHz)									
1.693	-14.4	V	3.0	32.6	1.0	-46.0	-13.0	-33.0	
2.540	-23.0	V	3.0	31.4	1.0	-53.4	-13.0	-40.4	
3.387	-26.1	V	3.0	30.5	1.0	-55.5	-13.0	-42.5	
1.693	-21.1	H	3.0	32.6	1.0	-52.7	-13.0	-39.7	
2.540	-25.2	H	3.0	31.4	1.0	-55.7	-13.0	-42.7	
3.387	-27.1	H	3.0	30.5	1.0	-56.5	-13.0	-43.5	

Rev. 03.03.09

This report shall not be reproduced except in full, without the written approval of UL Verification Services Inc.

Compliance Certification Services
Above 1GHz High Frequency Substitution Measurement

Company: LG Electronics
Project #: 14U17849
Date: 06/01/14
Test Engineer: D. Soper
Configuration: EUT with AC CHARGER
Mode: LTE B26 5M QPSK HARM

Chamber	Pre-amplifer	Filter	Limit
5m Chamber A	T145 8449B	Filter 1	

Band: LTE26 5MHz QPSK

f GHz	SG reading (dBm)	Ant. Pol. (H/V)	Distance (m)	Preamp (dB)	Filter (dB)	ERP (dBm)	Limit (dBm)	Delta (dB)	Notes
Low Ch, (816.5MHz)									
1.633	-22.6	V	3.0	32.7	1.0	-54.3	-13.0	-41.3	
2.450	-23.3	V	3.0	31.2	1.0	-53.6	-13.0	-40.6	
3.267	-26.4	V	3.0	30.6	1.0	-56.0	-13.0	-43.0	
1.633	-24.4	H	3.0	32.7	1.0	-56.1	-13.0	-43.1	
2.450	-23.1	H	3.0	31.2	1.0	-53.4	-13.0	-40.4	
3.267	-25.9	H	3.0	30.6	1.0	-55.5	-13.0	-42.5	
Mid Ch, (831.5MHz)									
1.663	-21.8	V	3.0	32.6	1.0	-53.4	-13.0	-40.4	
2.495	-22.5	V	3.0	31.5	1.0	-53.0	-13.0	-40.0	
3.327	-26.5	V	3.0	30.5	1.0	-56.1	-13.0	-43.1	
1.663	-21.7	H	3.0	32.6	1.0	-53.3	-13.0	-40.3	
2.495	-25.0	H	3.0	31.5	1.0	-55.5	-13.0	-42.5	
3.327	-26.7	H	3.0	30.5	1.0	-56.2	-13.0	-43.2	
High Ch, (846.5MHz)									
1.693	-13.1	V	3.0	32.6	1.0	-44.6	-13.0	-31.6	
2.540	-23.7	V	3.0	31.4	1.0	-54.2	-13.0	-41.2	
3.387	-25.8	V	3.0	30.5	1.0	-55.2	-13.0	-42.2	
1.693	-19.8	H	3.0	32.6	1.0	-51.3	-13.0	-38.3	
2.540	-25.1	H	3.0	31.4	1.0	-55.5	-13.0	-42.5	
3.387	-27.0	H	3.0	30.5	1.0	-56.4	-13.0	-43.4	

Rev. 03.03.09

This report shall not be reproduced except in full, without the written approval of UL Verification Services Inc.

Compliance Certification Services
Above 1GHz High Frequency Substitution Measurement

Company: LG Electronics
Project #: 14U17849
Date: 06/01/14
Test Engineer: D. Soper
Configuration: EUT with AC CHARGER
Mode: LTE B26 3M 16QAM HARM

Chamber	Pre-amplifer	Filter	Limit
5m Chamber A	T145 8449B	Filter 1	

Band: LTE26 3MHz 16QAM

f GHz	SG reading (dBm)	Ant. Pol. (H/V)	Distance (m)	Preamp (dB)	Filter (dB)	ERP (dBm)	Limit (dBm)	Delta (dB)	Notes
Low Ch, (815.5MHz)									
1.631	-16.9	V	3.0	32.7	1.0	-48.6	-13.0	-35.6	
2.447	-23.1	V	3.0	31.2	1.0	-53.3	-13.0	-40.3	
3.263	-26.4	V	3.0	30.6	1.0	-56.0	-13.0	-43.0	
1.631	-7.5	H	3.0	32.7	1.0	-39.2	-13.0	-26.2	
2.447	-14.6	H	3.0	31.2	1.0	-44.8	-13.0	-31.8	
3.263	-17.0	H	3.0	30.6	1.0	-46.6	-13.0	-33.6	
Mid Ch, (831.5MHz)									
1.663	-8.6	V	3.0	32.6	1.0	-40.2	-13.0	-27.2	
2.495	-27.3	V	3.0	31.5	1.0	-57.8	-13.0	-44.8	
3.327	-31.2	V	3.0	30.5	1.0	-60.7	-13.0	-47.7	
1.663	-14.5	H	3.0	32.6	1.0	-46.2	-13.0	-33.2	
2.495	-28.8	H	3.0	31.5	1.0	-59.3	-13.0	-46.3	
3.327	-32.4	H	3.0	30.5	1.0	-61.9	-13.0	-48.9	
High Ch, (847.5MHz)									
1.695	-12.0	V	3.0	32.6	1.0	-43.5	-13.0	-30.5	
2.543	-28.2	V	3.0	31.4	1.0	-58.6	-13.0	-45.6	
3.391	-31.4	V	3.0	30.5	1.0	-60.8	-13.0	-47.8	
1.695	-14.4	H	3.0	32.6	1.0	-46.0	-13.0	-33.0	
2.543	-28.5	H	3.0	31.4	1.0	-58.9	-13.0	-45.9	
3.391	-32.0	H	3.0	30.5	1.0	-61.5	-13.0	-48.5	

Rev. 03.03.09

This report shall not be reproduced except in full, without the written approval of UL Verification Services Inc.

Compliance Certification Services
Above 1GHz High Frequency Substitution Measurement

Company: LG Electronics
Project #: 14U17849
Date: 06/01/14
Test Engineer: D. Soper
Configuration: EUT with AC CHARGER
Mode: LTE B26 3M QPSK HARM

Chamber	Pre-amplifer	Filter	Limit
5m Chamber A	T145 8449B	Filter 1	

Band
LTE26
3MHz
QPSK

f GHz	SG reading (dBm)	Ant. Pol. (H/V)	Distance (m)	Preamp (dB)	Filter (dB)	ERP (dBm)	Limit (dBm)	Delta (dB)	Notes
Low Ch, (815.5MHz)									
1.631	-17.6	V	3.0	32.7	1.0	-49.3	-13.0	-36.3	
2.447	-21.3	V	3.0	31.2	1.0	-51.5	-13.0	-38.5	
3.263	-25.0	V	3.0	30.6	1.0	-54.6	-13.0	-41.6	
1.631	-7.5	H	3.0	32.7	1.0	-39.2	-13.0	-26.2	
2.447	-15.3	H	3.0	31.2	1.0	-45.6	-13.0	-32.6	
3.263	-17.4	H	3.0	30.6	1.0	-47.0	-13.0	-34.0	
Mid Ch, (831.5MHz)									
1.663	-11.7	V	3.0	32.6	1.0	-43.3	-13.0	-30.3	
2.495	-21.5	V	3.0	31.5	1.0	-52.0	-13.0	-39.0	
3.327	-25.4	V	3.0	30.5	1.0	-54.9	-13.0	-41.9	
1.663	-8.3	H	3.0	32.6	1.0	-39.9	-13.0	-26.9	
2.495	-23.4	H	3.0	31.5	1.0	-53.9	-13.0	-40.9	
3.327	-25.2	H	3.0	30.5	1.0	-54.8	-13.0	-41.8	
High Ch, (847.5MHz)									
1.695	-19.3	V	3.0	32.6	1.0	-50.8	-13.0	-37.8	
2.543	-23.3	V	3.0	31.4	1.0	-53.8	-13.0	-40.8	
3.391	-26.7	V	3.0	30.5	1.0	-56.2	-13.0	-43.2	
1.695	-8.1	H	3.0	32.6	1.0	-39.7	-13.0	-26.7	
2.543	-23.7	H	3.0	31.4	1.0	-54.1	-13.0	-41.1	
3.391	-25.6	H	3.0	30.5	1.0	-55.1	-13.0	-42.1	

Rev. 03.03.09

UL VERIFICATION SERVICES INC. FORM NO: CCSUP4701I
47173 BENICIA STREET, FREMONT, CA 94538, USA TEL: (510) 771-1000 FAX: (510) 661-0888

This report shall not be reproduced except in full, without the written approval of UL Verification Services Inc.

Compliance Certification Services
Above 1GHz High Frequency Substitution Measurement

Company: LG Electronics
Project #: 14U17849
Date: 06/01/14
Test Engineer: D. Soper
Configuration: EUT with AC CHARGER
Mode: LTE B26 1.4M 16QAM HARM

Chamber	Pre-amplifer	Filter	Limit
5m Chamber A	T145 8449B	Filter 1	

Band: LTE26 1.4MHz 16QAM

f GHz	SG reading (dBm)	Ant. Pol. (H/V)	Distance (m)	Preamp (dB)	Filter (dB)	ERP (dBm)	Limit (dBm)	Delta (dB)	Notes
Low Ch, (814.7MHz)									
1.629	-27.1	V	3.0	32.7	1.0	-58.8	-13.0	-45.8	
2.444	-23.9	V	3.0	31.2	1.0	-54.1	-13.0	-41.1	
3.259	-26.6	V	3.0	30.6	1.0	-56.1	-13.0	-43.1	
1.629	-16.0	H	3.0	32.7	1.0	-47.7	-13.0	-34.7	
2.444	-22.2	H	3.0	31.2	1.0	-52.5	-13.0	-39.5	
3.259	-26.5	H	3.0	30.6	1.0	-56.0	-13.0	-43.0	
Mid Ch, (831.5MHz)									
1.663	-17.5	V	3.0	32.6	1.0	-49.1	-13.0	-36.1	
2.495	-20.0	V	3.0	31.5	1.0	-50.4	-13.0	-37.4	
3.327	-25.6	V	3.0	30.5	1.0	-55.1	-13.0	-42.1	
1.663	-23.2	H	3.0	32.6	1.0	-54.8	-13.0	-41.8	
2.495	-22.9	H	3.0	31.5	1.0	-53.4	-13.0	-40.4	
3.327	-27.0	H	3.0	30.5	1.0	-56.5	-13.0	-43.5	
High Ch, (848.3MHz)									
1.697	-7.4	V	3.0	32.6	1.0	-39.0	-13.0	-26.0	
2.545	-23.4	V	3.0	31.4	1.0	-53.8	-13.0	-40.8	
3.393	-26.7	V	3.0	30.5	1.0	-56.1	-13.0	-43.1	
1.697	4.0	H	3.0	32.6	1.0	-27.6	-13.0	-14.6	
2.545	-13.5	H	3.0	31.4	1.0	-43.9	-13.0	-30.9	
3.393	-27.0	H	3.0	30.5	1.0	-56.5	-13.0	-43.5	

Rev. 03.03.09

This report shall not be reproduced except in full, without the written approval of UL Verification Services Inc.

Compliance Certification Services
Above 1GHz High Frequency Substitution Measurement

Company: LG Electronics
Project #: 14U17849
Date: 06/01/14
Test Engineer: D. Soper
Configuration: EUT with AC CHARGER
Mode: LTE B26 1.4M QPSK HARM

Chamber	Pre-amplifer	Filter	Limit
5m Chamber A	T145 8449B	Filter 1	

Band: LTE26 1.4MHz QPSK

f GHz	SG reading (dBm)	Ant. Pol. (H/V)	Distance (m)	Preamp (dB)	Filter (dB)	ERP (dBm)	Limit (dBm)	Delta (dB)	Notes
Low Ch, (814.7MHz)									
1.629	-15.6	V	3.0	32.7	1.0	-47.3	-13.0	-34.3	
2.444	-23.4	V	3.0	31.2	1.0	-53.6	-13.0	-40.6	
3.259	-26.3	V	3.0	30.6	1.0	-55.9	-13.0	-42.9	
1.629	-11.6	H	3.0	32.7	1.0	-43.3	-13.0	-30.3	
2.444	-25.1	H	3.0	31.2	1.0	-55.4	-13.0	-42.4	
3.259	-26.3	H	3.0	30.6	1.0	-55.9	-13.0	-42.9	
Mid Ch, (831.5MHz)									
1.663	-29.7	V	3.0	32.6	1.0	-61.3	-13.0	-48.3	
2.495	-13.6	V	3.0	31.5	1.0	-44.1	-13.0	-31.1	
3.327	-23.9	V	3.0	30.5	1.0	-53.5	-13.0	-40.5	
1.663	-21.2	H	3.0	32.6	1.0	-52.9	-13.0	-39.9	
2.495	-21.4	H	3.0	31.5	1.0	-51.9	-13.0	-38.9	
3.327	-26.6	H	3.0	30.5	1.0	-56.1	-13.0	-43.1	
High Ch, (848.3MHz)									
1.697	4.6	V	3.0	32.6	1.0	-27.0	-13.0	-14.0	
2.545	-13.0	V	3.0	31.4	1.0	-43.4	-13.0	-30.4	
3.393	-26.6	V	3.0	30.5	1.0	-56.1	-13.0	-43.1	
1.697	9.2	H	3.0	32.6	1.0	-22.3	-13.0	-9.3	
2.545	-20.2	H	3.0	31.4	1.0	-50.6	-13.0	-37.6	
3.393	-24.3	H	3.0	30.5	1.0	-53.7	-13.0	-40.7	

Rev. 03.03.09
Note: No other emissions were detected above the system noise floor.

UL VERIFICATION SERVICES INC. FORM NO: CCSUP4701I
47173 BENICIA STREET, FREMONT, CA 94538, USA TEL: (510) 771-1000 FAX: (510) 661-0888

This report shall not be reproduced except in full, without the written approval of UL Verification Services Inc.

Compliance Certification Services
Above 1GHz High Frequency Substitution Measurement

Company: LG
Project #: 14U17849
Date: 06/01/14
Test Engineer: R. Alegre
Configuration: EUT w/ AC Adapter
Mode: TX, LTE band 25, 10MHz, 16QAM

Chamber	Pre-amplifer	Filter	Limit
5m Chamber A	T145 8449B	Filter 1	Part 24

Band

LTE25

10MHz

16QAM

f GHz	SG reading (dBm)	Ant. Pol. (H/V)	Distance (m)	Preamp (dB)	Filter (dB)	ERP (dBm)	Limit (dBm)	Delta (dB)	Notes
Low Ch, (1855 MHz)									
3.710	-26.6	V	3.0	30.2	1.0	-55.8	-13.0	-42.8	
5.565	-29.4	V	3.0	28.4	1.0	-56.7	-13.0	-43.7	
7.420	-28.4	V	3.0	26.5	1.0	-53.8	-13.0	-40.8	
3.710	-25.1	H	3.0	30.2	1.0	-54.3	-13.0	-41.3	
5.565	-28.4	H	3.0	28.4	1.0	-55.8	-13.0	-42.8	
7.420	-23.2	H	3.0	26.5	1.0	-48.6	-13.0	-35.6	
Mid Ch, (1882.5 MHz)									
3.765	-25.5	V	3.0	30.1	1.0	-54.6	-13.0	-41.6	
5.648	-30.6	V	3.0	28.3	1.0	-57.9	-13.0	-44.9	
7.530	-24.4	V	3.0	26.3	1.0	-49.7	-13.0	-36.7	
3.765	-24.9	H	3.0	30.1	1.0	-54.1	-13.0	-41.1	
5.648	-29.3	H	3.0	28.3	1.0	-56.5	-13.0	-43.5	
7.530	-21.5	H	3.0	26.3	1.0	-46.9	-13.0	-33.9	
High Ch, (1909.8 MHz)									
3.820	-26.5	V	3.0	30.1	1.0	-55.6	-13.0	-42.6	
5.730	-29.6	V	3.0	28.2	1.0	-56.8	-13.0	-43.8	
7.640	-27.7	V	3.0	26.2	1.0	-52.9	-13.0	-39.9	
3.820	-24.4	H	3.0	30.1	1.0	-53.5	-13.0	-40.5	
5.730	-28.6	H	3.0	28.2	1.0	-55.8	-13.0	-42.8	
7.640	-22.3	H	3.0	26.2	1.0	-47.5	-13.0	-34.5	

Rev. 03.03.09

This report shall not be reproduced except in full, without the written approval of UL Verification Services Inc.

Compliance Certification Services
Above 1GHz High Frequency Substitution Measurement

Company: LG
Project #: 14U17849
Date: 06/01/14
Test Engineer: R. Alegre
Configuration: EUT w/ AC Adapter
Mode: TX, LTE band 25, 10MHz, QPSK

Chamber	Pre-amplifer	Filter	Limit
5m Chamber A	T145 8449B	Filter 1	Part 24

Band

LTE25

10MHz

QPSK

f GHz	SG reading (dBm)	Ant. Pol. (H/V)	Distance (m)	Preamp (dB)	Filter (dB)	ERP (dBm)	Limit (dBm)	Delta (dB)	Notes
Low Ch, (1855 MHz)									
3.710	-26.2	V	3.0	30.2	1.0	-55.4	-13.0	-42.4	
5.565	-29.2	V	3.0	28.4	1.0	-56.6	-13.0	-43.6	
7.420	-28.3	V	3.0	26.5	1.0	-53.8	-13.0	-40.8	
3.710	-24.9	H	3.0	30.2	1.0	-54.0	-13.0	-41.0	
5.565	-28.4	H	3.0	28.4	1.0	-55.7	-13.0	-42.7	
7.420	-23.2	H	3.0	26.5	1.0	-48.6	-13.0	-35.6	
Mid Ch, (1882.5 MHz)									
3.765	-25.5	V	3.0	30.1	1.0	-54.6	-13.0	-41.6	
5.648	-30.2	V	3.0	28.3	1.0	-57.5	-13.0	-44.5	
7.530	-24.3	V	3.0	26.3	1.0	-49.6	-13.0	-36.6	
3.765	-24.7	H	3.0	30.1	1.0	-53.9	-13.0	-40.9	
5.648	-28.7	H	3.0	28.3	1.0	-56.0	-13.0	-43.0	
7.530	-21.9	H	3.0	26.3	1.0	-47.2	-13.0	-34.2	
High Ch, (1910 MHz)									
3.820	-26.1	V	3.0	30.1	1.0	-55.2	-13.0	-42.2	
5.730	-29.4	V	3.0	28.2	1.0	-56.6	-13.0	-43.6	
7.640	-27.3	V	3.0	26.2	1.0	-52.5	-13.0	-39.5	
3.820	-24.2	H	3.0	30.1	1.0	-53.3	-13.0	-40.3	
5.730	-28.4	H	3.0	28.2	1.0	-55.6	-13.0	-42.6	
7.640	-22.1	H	3.0	26.2	1.0	-47.3	-13.0	-34.3	

Rev. 03.03.09

This report shall not be reproduced except in full, without the written approval of UL Verification Services Inc.

Compliance Certification Services
Above 1GHz High Frequency Substitution Measurement

Company: LG
Project #: 14U17849
Date: 06/01/14
Test Engineer: R. Alegre
Configuration: EUT , AC Adapter
Mode: TX, LTE band 25, 5MHz, 16QAM

Chamber	Pre-amplifer	Filter	Limit
5m Chamber A	T145 8449B	Filter 1	Part 24

Band

LTE25

5MHz

16QAM

f GHz	SG reading (dBm)	Ant. Pol. (H/V)	Distance (m)	Preamp (dB)	Filter (dB)	ERP (dBm)	Limit (dBm)	Delta (dB)	Notes
Low Ch, (1852.5 MHz)									
3.705	-24.4	V	3.0	30.2	1.0	-53.6	-13.0	-40.6	
5.558	-30.0	V	3.0	28.4	1.0	-57.4	-13.0	-44.4	
7.410	-27.4	V	3.0	26.5	1.0	-52.9	-13.0	-39.9	
3.705	-24.9	H	3.0	30.2	1.0	-54.1	-13.0	-41.1	
5.558	-29.5	H	3.0	28.4	1.0	-56.8	-13.0	-43.8	
7.410	-24.9	H	3.0	26.5	1.0	-50.4	-13.0	-37.4	
Mid Ch, (1882.5 MHz)									
3.765	-25.4	V	3.0	30.1	1.0	-54.6	-13.0	-41.6	
5.648	-29.2	V	3.0	28.3	1.0	-56.5	-13.0	-43.5	
7.530	-26.8	V	3.0	26.3	1.0	-52.2	-13.0	-39.2	
3.765	-25.3	H	3.0	30.1	1.0	-54.4	-13.0	-41.4	
5.648	-28.6	H	3.0	28.3	1.0	-55.9	-13.0	-42.9	
7.530	-24.9	H	3.0	26.3	1.0	-50.2	-13.0	-37.2	
High Ch, (1912.5 MHz)									
3.825	-23.5	V	3.0	30.1	1.0	-52.6	-13.0	-39.6	
5.738	-30.0	V	3.0	28.2	1.0	-57.2	-13.0	-44.2	
7.650	-27.0	V	3.0	26.2	1.0	-52.1	-13.0	-39.1	
3.825	-24.7	H	3.0	30.1	1.0	-53.8	-13.0	-40.8	
5.738	-28.0	H	3.0	28.2	1.0	-55.2	-13.0	-42.2	
7.650	-21.9	H	3.0	26.2	1.0	-47.1	-13.0	-34.1	

Rev. 03.03.09

This report shall not be reproduced except in full, without the written approval of UL Verification Services Inc.

Compliance Certification Services
Above 1GHz High Frequency Substitution Measurement

Company: LG
Project #: 14U17849
Date: 06/01/14
Test Engineer: R. Alegre
Configuration: EUT , AC Adapter
Mode: TX, LTE band 25, 5MHz, QPSK

Chamber	Pre-amplifer	Filter	Limit
5m Chamber A	T145 8449B	Filter 1	Part 24

Band
LTE25
5MHz
QPSK

f GHz	SG reading (dBm)	Ant. Pol. (H/V)	Distance (m)	Preamp (dB)	Filter (dB)	ERP (dBm)	Limit (dBm)	Delta (dB)	Notes
Low Ch, (1852.5 MHz)									
3.705	-24.1	V	3.0	30.2	1.0	-53.3	-13.0	-40.3	
5.558	-30.6	V	3.0	28.4	1.0	-58.0	-13.0	-45.0	
7.410	-27.7	V	3.0	26.5	1.0	-53.2	-13.0	-40.2	
3.705	-24.0	H	3.0	30.2	1.0	-53.2	-13.0	-40.2	
5.558	-29.0	H	3.0	28.4	1.0	-56.3	-13.0	-43.3	
7.410	-24.1	H	3.0	26.5	1.0	-49.5	-13.0	-36.5	
Mid Ch, (1882.5 MHz)									
3.765	-25.2	V	3.0	30.1	1.0	-54.4	-13.0	-41.4	
5.648	-28.4	V	3.0	28.3	1.0	-55.7	-13.0	-42.7	
7.530	-27.0	V	3.0	26.3	1.0	-52.3	-13.0	-39.3	
3.765	-25.1	H	3.0	30.1	1.0	-54.2	-13.0	-41.2	
5.648	-28.8	H	3.0	28.3	1.0	-56.1	-13.0	-43.1	
7.530	-24.4	H	3.0	26.3	1.0	-49.7	-13.0	-36.7	
High Ch, (1912.5 MHz)									
3.825	-23.5	V	3.0	30.1	1.0	-52.6	-13.0	-39.6	
5.738	-28.9	V	3.0	28.2	1.0	-56.0	-13.0	-43.0	
7.650	-26.9	V	3.0	26.2	1.0	-52.0	-13.0	-39.0	
3.825	-25.0	H	3.0	30.1	1.0	-54.1	-13.0	-41.1	
5.738	-27.7	H	3.0	28.2	1.0	-54.9	-13.0	-41.9	
7.650	-21.4	H	3.0	26.2	1.0	-46.6	-13.0	-33.6	

Rev. 03.03.09

This report shall not be reproduced except in full, without the written approval of UL Verification Services Inc.

Compliance Certification Services
Above 1GHz High Frequency Substitution Measurement

Company: LG
Project #: 14U17849
Date: 06/01/14
Test Engineer: R. Alegre
Configuration: EUT , AC Adapter
Mode: TX, LTE band 25, 3MHz, 16QAM

Chamber	Pre-amplifer	Filter	Limit
5m Chamber A	T145 8449B	Filter 1	Part 24

Band

LTE25

3MHz

16QAM

f GHz	SG reading (dBm)	Ant. Pol. (H/V)	Distance (m)	Preamp (dB)	Filter (dB)	ERP (dBm)	Limit (dBm)	Delta (dB)	Notes
Low Ch, (1851.5 MHz)									
3.703	-25.9	V	3.0	30.2	1.0	-55.1	-13.0	-42.1	
5.555	-30.2	V	3.0	28.4	1.0	-57.5	-13.0	-44.5	
7.406	-28.4	V	3.0	26.5	1.0	-53.9	-13.0	-40.9	
3.703	-25.7	H	3.0	30.2	1.0	-54.9	-13.0	-41.9	
5.555	-28.8	H	3.0	28.4	1.0	-56.2	-13.0	-43.2	
7.406	-21.4	H	3.0	26.5	1.0	-46.8	-13.0	-33.8	
Mid Ch, (1882.5 MHz)									
3.765	-25.8	V	3.0	30.1	1.0	-55.0	-13.0	-42.0	
5.647	-30.0	V	3.0	28.3	1.0	-57.3	-13.0	-44.3	
7.530	-28.3	V	3.0	26.3	1.0	-53.6	-13.0	-40.6	
3.765	-24.9	H	3.0	30.1	1.0	-54.1	-13.0	-41.1	
5.647	-28.3	H	3.0	28.3	1.0	-55.6	-13.0	-42.6	
7.530	-21.9	H	3.0	26.3	1.0	-47.2	-13.0	-34.2	
High Ch, (1913.5 MHz)									
3.828	-24.4	V	3.0	30.1	1.0	-53.5	-13.0	-40.5	
5.741	-29.5	V	3.0	28.2	1.0	-56.7	-13.0	-43.7	
7.654	-28.7	V	3.0	26.1	1.0	-53.9	-13.0	-40.9	
3.828	-23.8	H	3.0	30.1	1.0	-52.9	-13.0	-39.9	
5.741	-28.5	H	3.0	28.2	1.0	-55.6	-13.0	-42.6	
7.654	-21.7	H	3.0	26.1	1.0	-46.8	-13.0	-33.8	

Rev. 03.03.09

This report shall not be reproduced except in full, without the written approval of UL Verification Services Inc.

Compliance Certification Services
Above 1GHz High Frequency Substitution Measurement

Company: LG
Project #: 14U17849
Date: 06/01/14
Test Engineer: R. Alegre
Configuration: EUT , AC Adapter
Mode: TX, LTE band 25, 3MHz, QPSK

Chamber	Pre-amplifer	Filter	Limit
5m Chamber A	T145 8449B	Filter 1	Part 24

Band
LTE25
3MHz
QPSK

f GHz	SG reading (dBm)	Ant. Pol. (H/V)	Distance (m)	Preamp (dB)	Filter (dB)	ERP (dBm)	Limit (dBm)	Delta (dB)	Notes
Low Ch, (1851.5 MHz)									
3.703	-26.4	V	3.0	30.2	1.0	-55.6	-13.0	-42.6	
5.555	-29.8	V	3.0	28.4	1.0	-57.1	-13.0	-44.1	
7.406	-27.6	V	3.0	26.5	1.0	-53.1	-13.0	-40.1	
3.703	-25.0	H	3.0	30.2	1.0	-54.2	-13.0	-41.2	
5.555	-28.0	H	3.0	28.4	1.0	-55.4	-13.0	-42.4	
7.406	-21.9	H	3.0	26.5	1.0	-47.4	-13.0	-34.4	
Mid Ch, (1882.5 MHz)									
3.765	-25.4	V	3.0	30.1	1.0	-54.6	-13.0	-41.6	
5.648	-29.8	V	3.0	28.3	1.0	-57.1	-13.0	-44.1	
7.530	-28.4	V	3.0	26.3	1.0	-53.7	-13.0	-40.7	
3.765	-24.5	H	3.0	30.1	1.0	-53.7	-13.0	-40.7	
5.648	-28.5	H	3.0	28.3	1.0	-55.8	-13.0	-42.8	
7.530	-21.5	H	3.0	26.3	1.0	-46.8	-13.0	-33.8	
High Ch, (1913.5 MHz)									
3.828	-25.0	V	3.0	30.1	1.0	-54.1	-13.0	-41.1	
5.741	-29.3	V	3.0	28.2	1.0	-56.4	-13.0	-43.4	
7.654	-27.6	V	3.0	26.1	1.0	-52.7	-13.0	-39.7	
3.828	-24.1	H	3.0	30.1	1.0	-53.2	-13.0	-40.2	
5.741	-28.2	H	3.0	28.2	1.0	-55.4	-13.0	-42.4	
7.654	-21.2	H	3.0	26.1	1.0	-46.3	-13.0	-33.3	

Rev. 03.03.09

This report shall not be reproduced except in full, without the written approval of UL Verification Services Inc.

Compliance Certification Services
Above 1GHz High Frequency Substitution Measurement

Company: LG
Project #: 14U17849
Date: 05/28/14
Test Engineer: R. Alegre
Configuration: EUT with AC charger
Mode: Tx, 1900MHz HSDPA

Chamber	Pre-amplifer	Filter	Limit
5m Chamber A	T34 8449B	Filter 1	Part 24

Band

Band 2

HSDPA

f GHz	SG reading (dBm)	Ant. Pol. (H/V)	Distance (m)	Preamp (dB)	Filter (dB)	EIRP (dBm)	Limit (dBm)	Delta (dB)	Notes
Low Ch, 1852.4MHz									
3.705	-13.5	V	3.0	35.4	1.0	-47.9	-13.0	-34.9	
5.557	-14.5	V	3.0	34.7	1.0	-48.2	-13.0	-35.2	
7.409	-13.4	V	3.0	34.9	1.0	-47.3	-13.0	-34.3	
3.705	-17.3	H	3.0	35.4	1.0	-51.7	-13.0	-38.7	
5.557	-15.0	H	3.0	34.7	1.0	-48.7	-13.0	-35.7	
7.409	-12.5	H	3.0	34.9	1.0	-46.4	-13.0	-33.4	
Mid Ch, 1880MHz									
3.760	-13.6	V	3.0	35.3	1.0	-48.0	-13.0	-35.0	
5.640	-13.3	V	3.0	34.7	1.0	-47.0	-13.0	-34.0	
7.520	-11.6	V	3.0	34.9	1.0	-45.5	-13.0	-32.5	
3.760	-15.5	H	3.0	35.3	1.0	-49.8	-13.0	-36.8	
5.640	-13.5	H	3.0	34.7	1.0	-47.2	-13.0	-34.2	
7.520	-13.0	H	3.0	34.9	1.0	-46.9	-13.0	-33.9	
High Ch, 1907.6MHz									
3.815	-13.8	V	3.0	35.3	1.0	-48.1	-13.0	-35.1	
5.723	-16.1	V	3.0	34.7	1.0	-49.8	-13.0	-36.8	
7.630	-13.5	V	3.0	34.9	1.0	-47.5	-13.0	-34.5	
3.815	-17.4	H	3.0	35.3	1.0	-51.7	-13.0	-38.7	
5.723	-14.7	H	3.0	34.7	1.0	-48.5	-13.0	-35.5	
7.630	-12.2	H	3.0	34.9	1.0	-46.1	-13.0	-33.1	

Rev. 03.03.09

This report shall not be reproduced except in full, without the written approval of UL Verification Services Inc.

Compliance Certification Services
Above 1GHz High Frequency Substitution Measurement

Company: LG
Project #: 14U17849
Date: 05/28/14
Test Engineer: R. Alegre
Configuration: EUT with AC charger
Mode: Tx, 1900MHz Rel 99

Chamber	Pre-amplifer	Filter	Limit
5m Chamber A	T34 8449B	Filter 1	Part 24

Band

Band 2

REL99

f GHz	SG reading (dBm)	Ant. Pol. (H/V)	Distance (m)	Preamp (dB)	Filter (dB)	EIRP (dBm)	Limit (dBm)	Delta (dB)	Notes
Low Ch, 1852.4MHz									
3.705	-17.6	V	3.0	35.4	1.0	-52.0	-13.0	-39.0	
5.557	-13.5	V	3.0	34.7	1.0	-47.2	-13.0	-34.2	
7.409	-14.3	V	3.0	34.9	1.0	-48.2	-13.0	-35.2	
3.705	-17.0	H	3.0	35.4	1.0	-51.4	-13.0	-38.4	
5.557	-12.0	H	3.0	34.7	1.0	-45.8	-13.0	-32.8	
7.409	-12.9	H	3.0	34.9	1.0	-46.8	-13.0	-33.8	
Mid Ch, 1880MHz									
3.760	-17.1	V	3.0	35.3	1.0	-51.5	-13.0	-38.5	
5.640	-12.8	V	3.0	34.7	1.0	-46.5	-13.0	-33.5	
7.520	-13.1	V	3.0	34.9	1.0	-47.0	-13.0	-34.0	
3.760	-16.5	H	3.0	35.3	1.0	-50.8	-13.0	-37.8	
5.640	-9.3	H	3.0	34.7	1.0	-43.0	-13.0	-30.0	
7.520	-11.9	H	3.0	34.9	1.0	-45.8	-13.0	-32.8	
High Ch, 1907.6MHz									
3.815	-17.0	V	3.0	35.3	1.0	-51.3	-13.0	-38.3	
5.723	-14.4	V	3.0	34.7	1.0	-48.1	-13.0	-35.1	
7.630	-13.9	V	3.0	34.9	1.0	-47.8	-13.0	-34.8	
3.815	-15.5	H	3.0	35.3	1.0	-49.8	-13.0	-36.8	
5.723	-12.3	H	3.0	34.7	1.0	-46.1	-13.0	-33.1	
7.630	-12.7	H	3.0	34.9	1.0	-46.7	-13.0	-33.7	

Rev. 03.03.09

This report shall not be reproduced except in full, without the written approval of UL Verification Services Inc.

Compliance Certification Services
Above 1GHz High Frequency Substitution Measurement

Company: LG
Project #: 14U17849
Date: 06/01/14
Test Engineer: R. Alegre
Configuration: EUT with AC charger
Mode: WCDMA_HSDPA_ 850

Chamber	Pre-amplifer	Filter	Limit
5m Chamber A	T34 8449B	Filter 1	

Band

Band 5

HSDPA

f GHz	SG reading (dBm)	Ant. Pol. (H/V)	Distance (m)	Preamp (dB)	Filter (dB)	EIRP (dBm)	Limit (dBm)	Delta (dB)	Notes
Low Ch, 826.40MHz									
1.652	-26.5	V	3.0	37.4	1.0	-62.8	-13.0	-49.8	
2.479	-22.6	V	3.0	36.4	1.0	-58.0	-13.0	-45.0	
3.306	-21.1	V	3.0	35.8	1.0	-55.9	-13.0	-42.9	
1.652	-19.3	H	3.0	37.4	1.0	-55.7	-13.0	-42.7	
2.479	-23.9	H	3.0	36.4	1.0	-59.3	-13.0	-46.3	
3.306	-21.0	H	3.0	35.8	1.0	-55.8	-13.0	-42.8	
Mid Ch, 836.6MHz									
1.673	-26.2	V	3.0	37.3	1.0	-62.5	-13.0	-49.5	
2.510	-22.2	V	3.0	36.4	1.0	-57.6	-13.0	-44.6	
3.346	-21.1	V	3.0	35.8	1.0	-55.8	-13.0	-42.8	
1.673	-2.5	H	3.0	37.3	1.0	-38.9	-13.0	-25.9	
2.510	1.6	H	3.0	36.4	1.0	-33.8	-13.0	-20.8	
3.346	-16.7	H	3.0	35.8	1.0	-51.5	-13.0	-38.5	
High Ch, 846.6MHz									
1.693	-25.5	V	3.0	37.3	1.0	-61.8	-13.0	-48.8	
2.539	-22.4	V	3.0	36.3	1.0	-57.7	-13.0	-44.7	
3.386	-20.6	V	3.0	35.7	1.0	-55.3	-13.0	-42.3	
1.693	-5.7	H	3.0	37.3	1.0	-42.0	-13.0	-29.0	
2.539	0.1	H	3.0	36.3	1.0	-35.2	-13.0	-22.2	
3.386	-18.5	H	3.0	35.7	1.0	-53.3	-13.0	-40.3	

Rev. 03.03.09
Note: No other emissions were detected above the system noise floor.

UL VERIFICATION SERVICES INC. FORM NO: CCSUP4701I
47173 BENICIA STREET, FREMONT, CA 94538, USA TEL: (510) 771-1000 FAX: (510) 661-0888

This report shall not be reproduced except in full, without the written approval of UL Verification Services Inc.

Compliance Certification Services
Above 1GHz High Frequency Substitution Measurement

Company: LG
Project #: 14U17849
Date: 06/01/14
Test Engineer: R. Alegre
Configuration: EUT with AC charger
Mode: WCDMA_Rel 99_ 850

Chamber	Pre-amplifer	Filter	Limit
5m Chamber A	T34 8449B	Filter 1	

Band

Band 5

REL99

f GHz	SG reading (dBm)	Ant. Pol. (H/V)	Distance (m)	Preamp (dB)	Filter (dB)	EIRP (dBm)	Limit (dBm)	Delta (dB)	Notes
Low Ch, 826.40MHz									
1.652	-25.2	V	3.0	37.4	1.0	-61.6	-13.0	-48.6	
2.479	-22.6	V	3.0	36.4	1.0	-58.0	-13.0	-45.0	
3.306	-21.3	V	3.0	35.8	1.0	-56.1	-13.0	-43.1	
1.652	-18.4	H	3.0	37.4	1.0	-54.8	-13.0	-41.8	
2.479	-22.9	H	3.0	36.4	1.0	-58.3	-13.0	-45.3	
3.306	-20.6	H	3.0	35.8	1.0	-55.4	-13.0	-42.4	
Mid Ch, 836.6MHz									
1.673	-26.8	V	3.0	37.3	1.0	-63.1	-13.0	-50.1	
2.510	-21.9	V	3.0	36.4	1.0	-57.3	-13.0	-44.3	
3.346	-20.7	V	3.0	35.8	1.0	-55.5	-13.0	-42.5	
1.673	-0.7	H	3.0	37.3	1.0	-37.1	-13.0	-24.1	
2.510	4.0	H	3.0	36.4	1.0	-31.4	-13.0	-18.4	
3.346	-15.1	H	3.0	35.8	1.0	-49.9	-13.0	-36.9	
High Ch, 846.6MHz									
1.693	-25.3	V	3.0	37.3	1.0	-61.6	-13.0	-48.6	
2.539	-21.7	V	3.0	36.3	1.0	-57.0	-13.0	-44.0	
3.386	-19.3	V	3.0	35.7	1.0	-54.0	-13.0	-41.0	
1.693	-4.6	H	3.0	37.3	1.0	-40.9	-13.0	-27.9	
2.539	-0.7	H	3.0	36.3	1.0	-36.0	-13.0	-23.0	
3.386	-17.3	H	3.0	35.7	1.0	-52.0	-13.0	-39.0	

Rev. 03.03.09
Note: No other emissions were detected above the system noise floor.

This report shall not be reproduced except in full, without the written approval of UL Verification Services Inc.

Band

GSM1900

EGPRS

Compliance Certification Services
Above 1GHz High Frequency Substitution Measurement

Company: LG
Project #: 14U17849
Date: 06/01/14
Test Engineer: R. Alegre
Configuration: EUT with AC charger
Mode: EGPRS 1900

Chamber	Pre-amplifer	Filter	Limit
5m Chamber A	T343 8449B	Filter 1	Part 24

f GHz	SG reading (dBm)	Ant. Pol. (H/V)	Distance (m)	Preamp (dB)	Filter (dB)	EIRP (dBm)	Limit (dBm)	Delta (dB)	Notes
Low Ch, 1850MHz									
3.700	-17.1	V	3.0	35.4	1.0	-51.5	-13.0	-38.5	
5.550	-16.4	V	3.0	34.7	1.0	-50.1	-13.0	-37.1	
7.400	-13.8	V	3.0	34.9	1.0	-47.7	-13.0	-34.7	
3.700	-18.4	H	3.0	35.4	1.0	-52.8	-13.0	-39.8	
5.550	-15.9	H	3.0	34.7	1.0	-49.7	-13.0	-36.7	
7.400	-14.0	H	3.0	34.9	1.0	-47.9	-13.0	-34.9	
Mid Ch, 1880.0MHz									
3.760	-18.0	V	3.0	35.3	1.0	-52.4	-13.0	-39.4	
5.640	-16.2	V	3.0	34.7	1.0	-49.9	-13.0	-36.9	
7.520	-14.5	V	3.0	34.9	1.0	-48.4	-13.0	-35.4	
3.760	-19.1	H	3.0	35.3	1.0	-53.4	-13.0	-40.4	
5.640	-15.8	H	3.0	34.7	1.0	-49.5	-13.0	-36.5	
7.520	-12.6	H	3.0	34.9	1.0	-46.5	-13.0	-33.5	
High Ch, 1909.8 MHz									
3.820	-16.8	V	3.0	35.3	1.0	-51.1	-13.0	-38.1	
5.729	-15.2	V	3.0	34.7	1.0	-48.9	-13.0	-35.9	
7.639	-13.5	V	3.0	35.0	1.0	-47.5	-13.0	-34.5	
3.820	-17.9	H	3.0	35.3	1.0	-52.1	-13.0	-39.1	
5.729	-14.7	H	3.0	34.7	1.0	-48.4	-13.0	-35.4	
7.639	-13.3	H	3.0	35.0	1.0	-47.2	-13.0	-34.2	

Rev. 03.03.09

This report shall not be reproduced except in full, without the written approval of UL Verification Services Inc.

Compliance Certification Services
Above 1GHz High Frequency Substitution Measurement

Company: LG
Project #: 14U17849
Date: 06/01/14
Test Engineer: R. Alegre
Configuration: EUT with AC charger
Mode: GPRS 1900

Chamber	Pre-amplifer	Filter	Limit
5m Chamber A	T343 8449B	Filter 1	Part 24

Band

GSM1900

GPRS

f GHz	SG reading (dBm)	Ant. Pol. (H/V)	Distance (m)	Preamp (dB)	Filter (dB)	EIRP (dBm)	Limit (dBm)	Delta (dB)	Notes
Low Ch, 1850MHz									
3.700	-17.6	V	3.0	35.4	1.0	-52.0	-13.0	-39.0	
5.550	-15.7	V	3.0	34.7	1.0	-49.4	-13.0	-36.4	
7.400	-14.6	V	3.0	34.9	1.0	-48.5	-13.0	-35.5	
3.700	-18.5	H	3.0	35.4	1.0	-52.9	-13.0	-39.9	
5.550	-15.3	H	3.0	34.7	1.0	-49.0	-13.0	-36.0	
7.400	-12.4	H	3.0	34.9	1.0	-46.3	-13.0	-33.3	
Mid Ch, 1880.0MHz									
3.760	-18.0	V	3.0	35.3	1.0	-52.3	-13.0	-39.3	
5.640	-15.8	V	3.0	34.7	1.0	-49.5	-13.0	-36.5	
7.520	-14.1	V	3.0	34.9	1.0	-48.1	-13.0	-35.1	
3.760	-18.8	H	3.0	35.3	1.0	-53.1	-13.0	-40.1	
5.640	-15.0	H	3.0	34.7	1.0	-48.7	-13.0	-35.7	
7.520	-12.8	H	3.0	34.9	1.0	-46.7	-13.0	-33.7	
High Ch, 1909.8 MHz									
3.820	-17.0	V	3.0	35.3	1.0	-51.3	-13.0	-38.3	
5.729	-15.3	V	3.0	34.7	1.0	-49.0	-13.0	-36.0	
7.639	-14.2	V	3.0	35.0	1.0	-48.2	-13.0	-35.2	
3.820	-17.9	H	3.0	35.3	1.0	-52.2	-13.0	-39.2	
5.729	-15.0	H	3.0	34.7	1.0	-48.8	-13.0	-35.8	
7.639	-12.8	H	3.0	35.0	1.0	-46.7	-13.0	-33.7	

Rev. 03.03.09

This report shall not be reproduced except in full, without the written approval of UL Verification Services Inc.

Compliance Certification Services
Above 1GHz High Frequency Substitution Measurement

Company: LG
Project #: 14U17849
Date: 06/01/14
Test Engineer: R. Alegre
Configuration: EUT with AC charger
Mode: EGPRS 850

Chamber	Pre-amplifer	Filter	Limit
5m Chamber A	T34 8449B	Filter 1	

Band

GSM850

EGPRS

f GHz	SG reading (dBm)	Ant. Pol. (H/V)	Distance (m)	Preamp (dB)	Filter (dB)	EIRP (dBm)	Limit (dBm)	Delta (dB)	Notes
Low Ch, 824.2MHz									
1.648	-26.4	V	3.0	37.4	1.0	-62.8	-13.0	-49.8	
2.473	-22.6	V	3.0	36.4	1.0	-58.0	-13.0	-45.0	
3.297	-20.9	V	3.0	35.8	1.0	-55.7	-13.0	-42.7	
1.648	-23.8	H	3.0	37.4	1.0	-60.2	-13.0	-47.2	
2.473	-21.8	H	3.0	36.4	1.0	-57.2	-13.0	-44.2	
3.297	-21.2	H	3.0	35.8	1.0	-56.0	-13.0	-43.0	
Mid Ch, 836.6MHz									
1.673	0.4	V	3.0	37.3	1.0	-35.9	-13.0	-22.9	
2.510	7.6	V	3.0	36.4	1.0	-27.8	-13.0	-14.8	
3.346	-10.0	V	3.0	35.8	1.0	-44.8	-13.0	-31.8	
1.673	5.9	H	3.0	37.3	1.0	-30.4	-13.0	-17.4	
2.510	10.7	H	3.0	36.4	1.0	-24.7	-13.0	-11.7	
3.346	-6.0	H	3.0	35.8	1.0	-40.7	-13.0	-27.7	
High Ch, 848.8MHz									
1.698	2.1	V	3.0	37.3	1.0	-34.2	-13.0	-21.2	
2.547	8.0	V	3.0	36.3	1.0	-27.3	-13.0	-14.3	
3.395	-9.9	V	3.0	35.7	1.0	-44.7	-13.0	-31.7	
1.698	5.8	H	3.0	37.3	1.0	-30.5	-13.0	-17.5	
2.547	10.0	H	3.0	36.3	1.0	-25.3	-13.0	-12.3	
3.395	-5.3	H	3.0	35.7	1.0	-40.0	-13.0	-27.0	

Rev. 03.03.09
Note: No other emissions were detected above the system noise floor.

This report shall not be reproduced except in full, without the written approval of UL Verification Services Inc.

Compliance Certification Services
Above 1GHz High Frequency Substitution Measurement

Company: LG
Project #: 14U17849
Date: 06/01/14
Test Engineer: R. Alegre
Configuration: EUT with AC charger
Mode: GPRS 850

Chamber	Pre-amplifer	Filter	Limit
5m Chamber A	T34 8449B	Filter 1	

Band

GSM850

GPRS

f GHz	SG reading (dBm)	Ant. Pol. (H/V)	Distance (m)	Preamp (dB)	Filter (dB)	EIRP (dBm)	Limit (dBm)	Delta (dB)	Notes
Low Ch, 824.2MHz									
1.648	-24.7	V	3.0	37.4	1.0	-61.1	-13.0	-48.1	
2.473	-21.3	V	3.0	36.4	1.0	-56.7	-13.0	-43.7	
3.297	-20.0	V	3.0	35.8	1.0	-54.8	-13.0	-41.8	
1.648	-19.6	H	3.0	37.4	1.0	-56.0	-13.0	-43.0	
2.473	-18.7	H	3.0	36.4	1.0	-54.1	-13.0	-41.1	
3.297	-21.5	H	3.0	35.8	1.0	-56.3	-13.0	-43.3	
Mid Ch, 836.6MHz									
1.673	1.6	V	3.0	37.3	1.0	-34.7	-13.0	-21.7	
2.510	8.2	V	3.0	36.4	1.0	-27.2	-13.0	-14.2	
3.346	-8.4	V	3.0	35.8	1.0	-43.1	-13.0	-30.1	
1.673	8.5	H	3.0	37.3	1.0	-27.9	-13.0	-14.9	
2.510	12.4	H	3.0	36.4	1.0	-22.9	-13.0	-9.9	
3.346	-4.3	H	3.0	35.8	1.0	-39.1	-13.0	-26.1	
High Ch, 848.8MHz									
1.698	3.5	V	3.0	37.3	1.0	-32.8	-13.0	-19.8	
2.547	9.0	V	3.0	36.3	1.0	-26.3	-13.0	-13.3	
3.395	-7.9	V	3.0	35.7	1.0	-42.6	-13.0	-29.6	
1.698	9.1	H	3.0	37.3	1.0	-27.2	-13.0	-14.2	
2.547	13.7	H	3.0	36.3	1.0	-21.6	-13.0	-8.6	
3.395	-4.2	H	3.0	35.7	1.0	-38.9	-13.0	-25.9	

Rev. 03.03.09
Note: No other emissions were detected above the system noise floor.

UL VERIFICATION SERVICES INC. FORM NO: CCSUP4701I
47173 BENICIA STREET, FREMONT, CA 94538, USA TEL: (510) 771-1000 FAX: (510) 661-0888

This report shall not be reproduced except in full, without the written approval of UL Verification Services Inc.

EVDOR0

BC10

Compliance Certification Services
Above 1GHz High Frequency Substitution Measurement

Company: LG
Project #: 14U17849
Date: 6\5\14
Test Engineer: D. Soper
Configuration: EUT with AC adapter & HS
Mode: EVDOR0 BC10 HARM

Chamber	Pre-amplifer	Filter	Limit
5m Chamber A	T343 8449B	Filter 1	

f GHz	SG reading (dBm)	Ant. Pol. (H/V)	Distance (m)	Preamp (dB)	Filter (dB)	EIRP (dBm)	Limit (dBm)	Delta (dB)	Notes
Low Ch, 817.9MHz									
1.635	-19.2	V	3.0	37.4	1.0	-55.6	-13.0	-42.6	
2.453	-22.9	V	3.0	36.4	1.0	-58.3	-13.0	-45.3	
3.271	-23.0	V	3.0	35.8	1.0	-57.8	-13.0	-44.8	
1.635	-24.0	H	3.0	37.4	1.0	-60.4	-13.0	-47.4	
2.453	-27.3	H	3.0	36.4	1.0	-62.7	-13.0	-49.7	
3.271	-23.3	H	3.0	35.8	1.0	-58.1	-13.0	-45.1	
Mid Ch, 820.5MHz									
1.641	-28.2	V	3.0	37.4	1.0	-64.6	-13.0	-51.6	
2.461	-25.3	V	3.0	36.4	1.0	-60.7	-13.0	-47.7	
3.280	-21.3	V	3.0	35.8	1.0	-56.2	-13.0	-43.2	
1.641	-22.9	H	3.0	37.4	1.0	-59.3	-13.0	-46.3	
2.461	-27.7	H	3.0	36.4	1.0	-63.1	-13.0	-50.1	
3.280	-23.0	H	3.0	35.8	1.0	-57.8	-13.0	-44.8	
High Ch, 823.1 MHz									
1.646	-21.6	V	3.0	37.4	1.0	-58.0	-13.0	-45.0	
2.469	-23.8	V	3.0	36.4	1.0	-59.2	-13.0	-46.2	
3.292	-23.0	V	3.0	35.8	1.0	-57.8	-13.0	-44.8	
1.646	-23.4	H	3.0	37.4	1.0	-59.8	-13.0	-46.8	
2.469	-27.0	H	3.0	36.4	1.0	-62.4	-13.0	-49.4	
3.292	-23.2	H	3.0	35.8	1.0	-58.0	-13.0	-45.0	

Rev. 03.03.09
Note: No other emissions were detected above the system noise floor.

UL VERIFICATION SERVICES INC. FORM NO: CCSUP4701I
47173 BENICIA STREET, FREMONT, CA 94538, USA TEL: (510) 771-1000 FAX: (510) 661-0888

This report shall not be reproduced except in full, without the written approval of UL Verification Services Inc.

RTT

BC10

Compliance Certification Services
Above 1GHz High Frequency Substitution Measurement

Company: LG
Project #: 14U17849
Date: 6\5\14
Test Engineer: D. Soper
Configuration: EUT with AC adapter & HS
Mode: RTT BC10 HARM

Chamber	Pre-amplifer	Filter	Limit
5m Chamber A	T343 8449B	Filter 1	

f GHz	SG reading (dBm)	Ant. Pol. (H/V)	Distance (m)	Preamp (dB)	Filter (dB)	EIRP (dBm)	Limit (dBm)	Delta (dB)	Notes
Low Ch, 817.9MHz									
1.635	-29.7	V	3.0	37.4	1.0	-66.1	-13.0	-53.1	
2.453	-25.8	V	3.0	36.4	1.0	-61.2	-13.0	-48.2	
3.271	-23.0	V	3.0	35.8	1.0	-57.8	-13.0	-44.8	
1.635	-22.9	H	3.0	37.4	1.0	-59.3	-13.0	-46.3	
2.453	-27.8	H	3.0	36.4	1.0	-63.2	-13.0	-50.2	
3.271	-23.2	H	3.0	35.8	1.0	-58.0	-13.0	-45.0	
Mid Ch, 820.5MHz									
1.641	-29.6	V	3.0	37.4	1.0	-66.0	-13.0	-53.0	
2.461	-25.7	V	3.0	36.4	1.0	-61.2	-13.0	-48.2	
3.280	-22.6	V	3.0	35.8	1.0	-57.5	-13.0	-44.5	
1.641	-23.7	H	3.0	37.4	1.0	-60.1	-13.0	-47.1	
2.461	-27.5	H	3.0	36.4	1.0	-62.9	-13.0	-49.9	
3.280	-22.6	H	3.0	35.8	1.0	-57.4	-13.0	-44.4	
High Ch, 823.1 MHz									
1.646	-28.1	V	3.0	37.4	1.0	-64.5	-13.0	-51.5	
2.469	-26.0	V	3.0	36.4	1.0	-61.4	-13.0	-48.4	
3.292	-22.9	V	3.0	35.8	1.0	-57.7	-13.0	-44.7	
1.646	-23.6	H	3.0	37.4	1.0	-59.9	-13.0	-46.9	
2.469	-27.2	H	3.0	36.4	1.0	-62.6	-13.0	-49.6	
3.292	-23.1	H	3.0	35.8	1.0	-57.9	-13.0	-44.9	

Rev. 03.03.09

Note: No other emissions were detected above the system noise floor.

This report shall not be reproduced except in full, without the written approval of UL Verification Services Inc.

EVDOR0

BC0

Compliance Certification Services
Above 1GHz High Frequency Substitution Measurement

Company: LG
Project #: 14U17849
Date: 6\5\14
Test Engineer: D. Soper
Configuration: EUT with AC adapter & HS
Mode: EVDOR0 BC0 HARM

Chamber	Pre-amplifer	Filter	Limit
5m Chamber A	T343 8449B	Filter 1	

f GHz	SG reading (dBm)	Ant. Pol. (H/V)	Distance (m)	Preamp (dB)	Filter (dB)	EIRP (dBm)	Limit (dBm)	Delta (dB)	Notes
Low Ch, 824.7MHz									
1.650	-28.4	V	3.0	37.4	1.0	-64.8	-13.0	-51.8	
2.474	-25.2	V	3.0	36.4	1.0	-60.6	-13.0	-47.6	
3.298	-22.9	V	3.0	35.8	1.0	-57.7	-13.0	-44.7	
1.650	-28.2	H	3.0	37.4	1.0	-64.6	-13.0	-51.6	
2.474	-26.8	H	3.0	36.4	1.0	-62.2	-13.0	-49.2	
3.298	-23.2	H	3.0	35.8	1.0	-58.0	-13.0	-45.0	
Mid Ch, 836.52MHz									
1.673	-24.8	V	3.0	37.3	1.0	-61.1	-13.0	-48.1	
2.509	-25.0	V	3.0	36.4	1.0	-60.3	-13.0	-47.3	
3.346	-22.8	V	3.0	35.8	1.0	-57.5	-13.0	-44.5	
1.673	-14.3	H	3.0	37.3	1.0	-50.6	-13.0	-37.6	
2.509	-26.4	H	3.0	36.4	1.0	-61.7	-13.0	-48.7	
3.346	-22.4	H	3.0	35.8	1.0	-57.1	-13.0	-44.1	
High Ch, 848.31 MHz									
1.696	-29.1	V	3.0	37.3	1.0	-65.4	-13.0	-52.4	
2.544	-25.3	V	3.0	36.3	1.0	-60.7	-13.0	-47.7	
3.393	-20.5	V	3.0	35.7	1.0	-55.2	-13.0	-42.2	
1.696	14.8	H	3.0	37.3	1.0	-21.5	-13.0	-8.5	
2.544	0.8	H	3.0	36.3	1.0	-34.6	-13.0	-21.6	
3.393	-19.9	H	3.0	35.7	1.0	-54.6	-13.0	-41.6	

Rev. 03.03.09
Note: No other emissions were detected above the system noise floor.

This report shall not be reproduced except in full, without the written approval of UL Verification Services Inc.

RTT

BC0

Compliance Certification Services
Above 1GHz High Frequency Substitution Measurement

Company: LG
Project #: 14U17849
Date: 06/02/14
Test Engineer: D. Soper
Configuration: EUT with AC charger & HS
Mode: RTT BC0

Chamber	Pre-amplifer	Filter	Limit
5m Chamber A	T34 8449B	Filter 1	

f GHz	SG reading (dBm)	Ant. Pol. (H/V)	Distance (m)	Preamp (dB)	Filter (dB)	EIRP (dBm)	Limit (dBm)	Delta (dB)	Notes
Low Ch, 824.2MHz									
1.648	-30.0	V	3.0	37.4	1.0	-66.4	-13.0	-53.4	
2.473	-29.7	V	3.0	36.4	1.0	-65.1	-13.0	-52.1	
3.297	-27.9	V	3.0	35.8	1.0	-62.7	-13.0	-49.7	
1.648	-29.2	H	3.0	37.4	1.0	-65.6	-13.0	-52.6	
2.473	-31.5	H	3.0	36.4	1.0	-66.9	-13.0	-53.9	
3.297	-28.1	H	3.0	35.8	1.0	-62.9	-13.0	-49.9	
Mid Ch, 836.52MHz									
1.673	-27.6	V	3.0	37.3	1.0	-64.0	-13.0	-51.0	
2.510	-29.5	V	3.0	36.4	1.0	-64.9	-13.0	-51.9	
3.346	-27.9	V	3.0	35.8	1.0	-62.6	-13.0	-49.6	
1.673	-29.7	H	3.0	37.3	1.0	-66.0	-13.0	-53.0	
2.510	-31.2	H	3.0	36.4	1.0	-66.6	-13.0	-53.6	
3.346	-27.5	H	3.0	35.8	1.0	-62.2	-13.0	-49.2	
High Ch, 848.31MHz									
1.697	-32.1	V	3.0	37.3	1.0	-68.4	-13.0	-55.4	
2.545	-29.5	V	3.0	36.3	1.0	-64.8	-13.0	-51.8	
3.393	-28.2	V	3.0	35.7	1.0	-62.9	-13.0	-49.9	
1.697	-32.3	H	3.0	37.3	1.0	-68.6	-13.0	-55.6	
2.545	-31.0	H	3.0	36.3	1.0	-66.4	-13.0	-53.4	
3.393	-28.0	H	3.0	35.7	1.0	-62.7	-13.0	-49.7	

Rev. 03.03.09
Note: No other emissions were detected above the system noise floor.

This report shall not be reproduced except in full, without the written approval of UL Verification Services Inc.

EVDOR0

BC1

Compliance Certification Services
Above 1GHz High Frequency Substitution Measurement

Company: LG
Project #: 14U17849
Date: 6\5\14
Test Engineer: D. Soper
Configuration: EUT with AC adapter & HS
Mode: EVDO BC01 HARM

Chamber	Pre-amplifer	Filter	Limit
5m Chamber A	T343 8449B	Filter 1	Part 24

f GHz	SG reading (dBm)	Ant. Pol. (H/V)	Distance (m)	Preamp (dB)	Filter (dB)	EIRP (dBm)	Limit (dBm)	Delta (dB)	Notes
Low Ch, 1851.25MHz									
3.703	-17.9	V	3.0	35.4	1.0	-52.3	-13.0	-39.3	
5.554	-16.6	V	3.0	34.7	1.0	-50.3	-13.0	-37.3	
7.405	-14.8	V	3.0	34.9	1.0	-48.7	-13.0	-35.7	
3.703	-16.0	H	3.0	35.4	1.0	-50.4	-13.0	-37.4	
5.554	-15.1	H	3.0	34.7	1.0	-48.8	-13.0	-35.8	
7.405	-13.6	H	3.0	34.9	1.0	-47.5	-13.0	-34.5	
Mid Ch, 1880.0MHz									
3.760	-16.7	V	3.0	35.3	1.0	-51.0	-13.0	-38.0	
5.640	-16.3	V	3.0	34.7	1.0	-50.0	-13.0	-37.0	
7.520	-14.3	V	3.0	34.9	1.0	-48.2	-13.0	-35.2	
3.760	-14.8	H	3.0	35.3	1.0	-49.1	-13.0	-36.1	
5.640	-16.0	H	3.0	34.7	1.0	-49.8	-13.0	-36.8	
7.520	-13.2	H	3.0	34.9	1.0	-47.1	-13.0	-34.1	
High Ch, 1908.75 MHz									
3.818	-18.2	V	3.0	35.3	1.0	-52.4	-13.0	-39.4	
5.726	-16.5	V	3.0	34.7	1.0	-50.2	-13.0	-37.2	
7.635	-13.9	V	3.0	34.9	1.0	-47.9	-13.0	-34.9	
3.818	-17.7	H	3.0	35.3	1.0	-52.0	-13.0	-39.0	
5.726	-15.4	H	3.0	34.7	1.0	-49.1	-13.0	-36.1	
7.635	-12.7	H	3.0	34.9	1.0	-46.7	-13.0	-33.7	

Rev. 03.03.09
Note: No other emissions were detected above the system noise floor.

This report shall not be reproduced except in full, without the written approval of UL Verification Services Inc.

RTT

BC1

Compliance Certification Services
Above 1GHz High Frequency Substitution Measurement

Company: LG
Project #: 14U17849
Date: 06/02/14
Test Engineer: D. Soper
Configuration: EUT with AC charger & HS
Mode: RTT BC1

Chamber	Pre-amplifer	Filter	Limit
5m Chamber A	T34 8449B	Filter 1	Part 24

f GHz	SG reading (dBm)	Ant. Pol. (H/V)	Distance (m)	Preamp (dB)	Filter (dB)	EIRP (dBm)	Limit (dBm)	Delta (dB)	Notes
Low Ch, 1851.25 MHz									
3.703	-23.6	V	3.0	35.4	1.0	-58.0	-13.0	-45.0	
5.554	-22.0	V	3.0	34.7	1.0	-55.7	-13.0	-42.7	
7.405	-20.8	V	3.0	34.9	1.0	-54.7	-13.0	-41.7	
3.703	-24.0	H	3.0	35.4	1.0	-58.4	-13.0	-45.4	
5.554	-22.7	H	3.0	34.7	1.0	-56.5	-13.0	-43.5	
7.405	-19.6	H	3.0	34.9	1.0	-53.5	-13.0	-40.5	
Mid Ch, 1880 MHz									
3.760	-13.0	V	3.0	35.3	1.0	-47.3	-13.0	-34.3	
5.640	-10.1	V	3.0	34.7	1.0	-43.9	-13.0	-30.9	
7.520	-9.4	V	3.0	34.9	1.0	-43.4	-13.0	-30.4	
3.760	-23.5	H	3.0	35.3	1.0	-57.8	-13.0	-44.8	
5.640	-21.3	H	3.0	34.7	1.0	-55.0	-13.0	-42.0	
7.520	-19.7	H	3.0	34.9	1.0	-53.6	-13.0	-40.6	
High Ch, 1908.75 MHz									
3.818	-23.1	V	3.0	35.3	1.0	-57.4	-13.0	-44.4	
5.726	-21.5	V	3.0	34.7	1.0	-55.2	-13.0	-42.2	
7.635	-20.5	V	3.0	34.9	1.0	-54.5	-13.0	-41.5	
3.818	-23.5	H	3.0	35.3	1.0	-57.8	-13.0	-44.8	
5.726	-20.8	H	3.0	34.7	1.0	-54.5	-13.0	-41.5	
7.635	-19.2	H	3.0	34.9	1.0	-53.2	-13.0	-40.2	

Rev. 03.03.09
Note: No other emissions were detected above the system noise floor.

UL VERIFICATION SERVICES INC. FORM NO: CCSUP4701I
47173 BENICIA STREET, FREMONT, CA 94538, USA TEL: (510) 771-1000 FAX: (510) 661-0888

This report shall not be reproduced except in full, without the written approval of UL Verification Services Inc.