**FCC CFR47 PART 22 SUBPART H**
**FCC CFR47 PART 24 SUBPART E**
**FCC CFR47 PART 27 SUBPART F**
**FCC CFR47 PART 27 SUBPART H**
**FCC CFR47 PART 27 SUBPART L**
**FCC CFR47 PART 27 SUBPART M**
**FCC CFR47 PART 90 SUBPART S**

# C2PC CERTIFICATION TEST REPORT

**FOR**

**GSM/CDMA/WCDMA/LTE PHONE + BLUETOOTH, with DTS/UNII a/b/g/n/ac & NFC**

**MODEL NUMBER: LG-LS991, LS991, LGLS991, LGAS991, AS991, LG-AS991**

**FCC ID: ZNFLS991**

**REPORT NUMBER: 15I20514-E1 REVISION A**

**ISSUE DATE: MAY 5, 2015**

*Prepared for*
**LG ELECTRONICS MOBILECOMM U.S.A., INC**
**1000 SYLVAN AVENUE**
**ENGLEWOOD CLIFFS,**
**NEW JERSEY, 07632, U.S.A**

*Prepared by*
**UL VERIFICATION SERVICES**
**47173 BENICIA STREET**
**FREMONT, CA 94538, U.S.A.**
**TEL: (510) 771-1000**
**FAX: (510) 661-0888**

NVLAP LAB CODE 200065-0

# Revision History

| Rev. | Issue Date | Revisions | Revised By |
|---|---|---|---|
| -- | 05/04/15 | Initial Issue | D. Coronia |
| A | 05/05/15 | Added Additional Model Names on Header, Page 1, and Page 5 | J. Ko |


UL VERFICATION SERVICES FORM ID: FCC_22_24_27_90
47173 BENICIA STREET, FREMONT, CA 94538, USA TEL: (510) 771-1000 FAX: (510) 661-0888
*This report shall not be reproduced except in full, without the written approval of UL Verification Services Inc.*

# TABLE OF CONTENTS

**1. ATTESTATION OF TEST RESULTS ..... 5**
**2. TEST METHODOLOGY ..... 6**
**3. FACILITIES AND ACCREDITATION ..... 6**
**4. CALIBRATION AND UNCERTAINTY ..... 6**
*4.1. MEASURING INSTRUMENT CALIBRATION ..... 6*
*4.2. SAMPLE CALCULATION ..... 6*
*4.3. MEASUREMENT UNCERTAINTY ..... 7*
**5. EQUIPMENT UNDER TEST ..... 8**
*5.1. DESCRIPTION OF EUT ..... 8*
*5.2. MAXIMUM OUTPUT POWER ..... 9*
*5.3. MAXIMUM OUTPUT POWER (LTE) ..... 10*
*5.4. DESCRIPTION OF AVAILABLE ANTENNAS ..... 15*
*5.5. DESCRIPTION OF TEST SETUP ..... 16*
*5.6. DESCRIPTION OF TEST SETUP ..... 19*
**6. TEST AND MEASUREMENT EQUIPMENT ..... 20**
**7. SUMMARY TABLE ..... 21**
**C2PC reason: Please see LG FCC Class II cover letter for details. ..... 21**
**8. RF POWER OUTPUT VERIFICATION ..... 22**
*8.1. GSM/GPRS/EDGE ..... 22*
8.1.1. GSM OUTPUT POWER RESULT ..... 23
*8.2. CDMA2000 ..... 24*
8.2.1. 1xRTT ..... 24
8.2.2. CDMA2000 OUTPUT POWER RESULT ..... 25
8.2.3. 1xEV-DO Release 0 ..... 26
8.2.4. 1XEVDO REL 0 OUTPUT POWER RESULT ..... 27
8.2.5. 1xEV-DO Rev. A ..... 28
8.2.6. 1xEVDO REV A OUTPUT RESULT ..... 29
*8.3. UMTS REL 99 ..... 30*
8.3.1. UMTS REL 99 OUTPUT POWER RESULT ..... 31
*8.4. UMTS HSDPA ..... 32*
8.4.1. UMTS HSDPA OUTPUT POWER RESULT ..... 33
*8.5. UMTS HSUPA ..... 34*


*This report shall not be reproduced except in full, without the written approval of UL Verification Services Inc.*

8.5.1. UMTS HSUPA OUTPUT POWER RESULT ..... 35
*8.6. LTE OUTPUT VERIFICATION ..... 36*
8.6.1. LTE OUTPUT RESULT ..... 36
**9. RADIATED TEST RESULTS ..... 54**
*9.1. RADIATED POWER (ERP & EIRP) ..... 54*
9.1.1. ERP/EIRP RESULTS ..... 55
9.1.2. LTE ERP/EIRP RESULTS ..... 57
9.1.3. ERP/EIRP PLOTS ..... 67
*9.2. FIELD STRENGTH OF SPURIOUS RADIATION ..... 151*
9.2.1. SPURIOUS RADIATION PLOTS ..... 152
**10. SETUP PHOTOS ..... 236**


*This report shall not be reproduced except in full, without the written approval of UL Verification Services Inc.*

# 1. ATTESTATION OF TEST RESULTS

**COMPANY NAME:** LG ELECTRONICS MOBILECOMM U.S.A., INC
**EUT DESCRIPTION:** GSM/CDMA/WCDMA/LTE PHONE + BLUETOOTH, with DTS/UNII a/b/g/n/ac & NFC
**MODEL:** LG-LS991, LS991, LGLS991, LGAS991, AS991, LG-AS991
**SERIAL NUMBER:** 1W43T (radiated)
**DATE TESTED:** APRIL 15- 28, 2015

| APPLICABLE STANDARDS | |
|---|---|
| **STANDARD** | **TEST RESULTS** |
| FCC PART 22H, 24E. 27F, 27H, 27L, 27M, and 90S | PASS |

UL Verification Services Inc. tested the above equipment in accordance with the requirements set forth in the above standards. All indications of Pass/Fail in this report are opinions expressed by UL Verification Services Inc. based on interpretations and/or observations of test results. Measurement Uncertainties were not taken into account and are published for informational purposes only. The test results show that the equipment tested is capable of demonstrating compliance with the requirements as documented in this report.

**Note:** The results documented in this report apply only to the tested sample, under the conditions and modes of operation as described herein. This document may not be altered or revised in any way unless done so by UL Verification Services Inc. and all revisions are duly noted in the revisions section. Any alteration of this document not carried out by UL Verification Services Inc. will constitute fraud and shall nullify the document. This report must not be used by the client to claim product certification, approval, or endorsement by NVLAP, NIST, any agency of the Federal Government, or any agency of any government.

Approved & Released For
UL Verification Services Inc. By:

DAN CORONIA
CONSUMER TECHNOLOGY DIVISION
WiSE PROJECT LEAD
UL VERIFICATION SERVICES INC

Tested By:

STEVEN TRAN
CONSUMER TECHNOLOGY DIVISION
WiSE LAB ENGINEER
UL VERIFICATION SERVICES INC


*This report shall not be reproduced except in full, without the written approval of UL Verification Services Inc.*

# 2. TEST METHODOLOGY

The tests documented in this report were performed in accordance with TIA-603-C, FCC CFR 47 Part 22, FCC CFR Part 24, FCC CFR 47 Part 27, and FCC CFR 47 Part 90.

# 3. FACILITIES AND ACCREDITATION

The test sites and measurement facilities used to collect data are located at 47173 and 47266 Benicia Street, Fremont, California, USA. Line conducted emissions are measured only at the 47173 address. The following table identifies which facilities were utilized for radiated emission measurements documented in this report. Specific facilities are also identified in the test results sections.

| 47173 Benicia Street | 47266 Benicia Street |
|---|---|
| ☐ Chamber A(IC: 2324B-1) | ☐ Chamber D(IC: 2324B-4) |
| ☒ Chamber B(IC: 2324B-2) | ☐ Chamber E(IC: 2324B-5) |
| ☒ Chamber C(IC: 2324B-3) | ☒ Chamber F(IC: 2324B-6) |
| | ☒ Chamber G(IC: 2324B-7) |
| | ☐ Chamber H(IC: 2324B-8) |

UL Verification Services Inc. is accredited by NVLAP, Laboratory Code 200065-0. The full scope of accreditation can be viewed at http://ts.nist.gov/standards/scopes/2000650.htm.

# 4. CALIBRATION AND UNCERTAINTY

## 4.1. MEASURING INSTRUMENT CALIBRATION

The measuring equipment utilized to perform the tests documented in this report has been calibrated in accordance with the manufacturer's recommendations, and is traceable to recognized national standards

## 4.2. SAMPLE CALCULATION

Where relevant, the following sample calculation is provided:

EIRP = PSA reading with EUT worst orientation (dBm) + Path loss (dB) – cable loss( between the SG and substitution antenna) + Substitution Antenna Factor (dBi)

ERP = PSA reading with EUT worst orientation (dBm) + Path loss (dB) – cable loss( between the SG and substitution antenna)

(Path loss = Signal generator output – PSA reading with substitution antenna)


*This report shall not be reproduced except in full, without the written approval of UL Verification Services Inc.*

## 4.3. MEASUREMENT UNCERTAINTY

Where relevant, the following measurement uncertainty levels have been estimated for tests performed on the apparatus:

| PARAMETER | UNCERTAINTY |
|---|---|
| Conducted Disturbance, 0.15 to 30 MHz | 3.52 dB |
| Radiated Disturbance, 30 to 1000 MHz | 4.94 dB |
| Radiated Disturbance, 1GHz to 40GHz | 4.94 dB |

Uncertainty figures are valid to a confidence level of 95%.


*This report shall not be reproduced except in full, without the written approval of UL Verification Services Inc.*

# 5. EQUIPMENT UNDER TEST

## 5.1. DESCRIPTION OF EUT

The EUT is a GSM/CDMA/WCDMA/LTE PHONE + BLUETOOTH, with DTS/UNII a/b/g/n/ac & NFC



UL VERFICATION SERVICES FORM ID: FCC_22_24_27_90
47173 BENICIA STREET, FREMONT, CA 94538, USA TEL: (510) 771-1000 FAX: (510) 661-0888

*This report shall not be reproduced except in full, without the written approval of UL Verification Services Inc.*

## 5.2. MAXIMUM OUTPUT POWER

The transmitter has a maximum peak conducted and radiated ERP / EIRP output powers as follows:

| FCC Part 22/24 | | | | | | |
|---|---|---|---|---|---|---|
| Band | Frequency Range(MHz) | Modulation mW | Conducted | | Radiated | |
| | | | AVG(dBm) | AVG(mW) | AVG(dBm) | AVG(mW) |
| GSM850 | 824~849 | GMSK | 33.2 | 2089.30 | | |
| | 824~849 | GPRS | 33.2 | 2089.30 | 30.2 | 1047.13 |
| | 824~849 | EGPRS | 27.7 | 588.84 | 24.8 | 301.99 |
| GSM1900 | 1850~1910 | GMSK | 29.4 | 870.96 | | |
| | 1850~1910 | GPRS | 29.4 | 870.96 | 30.80 | 1202.26 |
| | 1850~1910 | EGPRS | 26.7 | 467.74 | 28.90 | 776.25 |
| Band 5 | 824~849 | REL99 | 23.70 | 234.42 | 21.89 | 154.56 |
| | 824~849 | HSDPA | 23.70 | 234.42 | 21.58 | 143.91 |
| | 824~849 | HSUPA | 23.80 | 239.88 | | |
| Band 2 | 1850~1910 | REL99 | 23.70 | 234.42 | 25.10 | 323.59 |
| | 1850~1910 | HSDPA | 23.70 | 234.42 | 24.70 | 295.12 |
| | 1850~1910 | HSUPA | 23.70 | 234.42 | | |
| BC10 | 816~824 | 1xRTT | 25.20 | 331.13 | 21.55 | 142.92 |
| | 816~824 | EVDO REL. 0 | 25.10 | 323.59 | 21.64 | 145.88 |
| | 816~824 | EVDO REV. A | 25.00 | 316.23 | | |
| BC0 | 824~849 | 1xRTT | 25.20 | 331.13 | 21.96 | 157.07 |
| | 824~849 | EVDO REL. 0 | 25.00 | 316.23 | 21.69 | 147.57 |
| | 824~849 | EVDO REV. A | 24.90 | 309.03 | | |
| BC1 | 1850~1910 | 1xRTT | 24.90 | 309.03 | 24.75 | 473.15 |
| | 1850~1910 | EVDO REL. 0 | 24.90 | 309.03 | 23.65 | 462.38 |
| | 1850~1910 | EVDO REV. A | 24.90 | 309.03 | | |


*This report shall not be reproduced except in full, without the written approval of UL Verification Services Inc.*

## 5.3. MAXIMUM OUTPUT POWER (LTE)

**LTE Band 2**

| FCC Part 24 | | | | | | | |
|---|---|---|---|---|---|---|---|
| Band | Frequency Range(MHz) | BandWidth (MHz) | Modulation | Conducted | | Radiated | |
| | | | | AVG(dBm) | AVG(mW) | AVG(dBm) | AVG(mW) |
| LTE2 | 1850~1910 | 20MHz | QPSK | 23.70 | 234.42 | 25.40 | 346.74 |
| | | | 16QAM | 22.70 | 186.21 | 24.78 | 300.61 |
| | | 15MHz | QPSK | 23.60 | 229.09 | 25.30 | 338.84 |
| | | | 16QAM | 22.20 | 165.96 | 24.70 | 295.12 |
| | | 10MHz | QPSK | 23.70 | 234.42 | 25.30 | 338.84 |
| | | | 16QAM | 22.40 | 173.78 | 24.70 | 295.12 |
| | | 5MHz | QPSK | 23.70 | 234.42 | 25.50 | 354.81 |
| | | | 16QAM | 22.50 | 177.83 | 24.80 | 302.00 |
| | | 3MHz | QPSK | 23.70 | 234.42 | 25.69 | 370.68 |
| | | | 16QAM | 22.10 | 162.18 | 25.08 | 322.11 |
| | | 1.4MHz | QPSK | 23.70 | 234.42 | 25.87 | 386.37 |
| | | | 16QAM | 22.30 | 169.82 | 25.10 | 323.59 |


*This report shall not be reproduced except in full, without the written approval of UL Verification Services Inc.*

## LTE Band 4

| FCC Part 27 | | | | | | | |
|---|---|---|---|---|---|---|---|
| Band | Frequency Range(MHz) | BandWidth (MHz) | Modulation | Conducted | | Radiated | |
| | | | | AVG(dBm) | AVG(mW) | AVG(dBm) | AVG(mW) |
| LTE4 | 1710~1755 | 20MHz | QPSK | 23.70 | 234.42 | 22.12 | 162.93 |
| | | | 16QAM | 22.70 | 186.21 | 21.42 | 138.68 |
| | | 15MHz | QPSK | 23.70 | 234.42 | 22.23 | 167.11 |
| | | | 16QAM | 22.40 | 173.78 | 21.53 | 142.23 |
| | | 10MHz | QPSK | 23.70 | 234.42 | 22.14 | 163.68 |
| | | | 16QAM | 22.60 | 181.97 | 21.44 | 139.32 |
| | | 5MHz | QPSK | 23.70 | 234.42 | 22.24 | 167.49 |
| | | | 16QAM | 22.70 | 186.21 | 21.54 | 142.56 |
| | | 3MHz | QPSK | 23.70 | 234.42 | 22.25 | 167.88 |
| | | | 16QAM | 22.30 | 169.82 | 21.55 | 142.89 |
| | | 1.4MHz | QPSK | 23.70 | 234.42 | 22.30 | 169.82 |
| | | | 16QAM | 22.40 | 173.78 | 21.45 | 139.64 |

## LTE Band 5

| FCC Part 22 | | | | | | | |
|---|---|---|---|---|---|---|---|
| Band | Frequency Range(MHz) | BandWidth (MHz) | Modulation | Conducted | | Radiated | |
| | | | | AVG(dBm) | AVG(mW) | AVG(dBm) | AVG(mW) |
| LTE5 | 824~849 | 10MHz | QPSK | 23.60 | 229.09 | 20.55 | 113.50 |
| | | | 16QAM | 22.40 | 173.78 | 20.01 | 100.23 |
| | | 5MHz | QPSK | 23.60 | 229.09 | 20.45 | 110.92 |
| | | | 16QAM | 22.60 | 181.97 | 19.62 | 91.62 |
| | | 3MHz | QPSK | 23.50 | 223.87 | 20.66 | 116.41 |
| | | | 16QAM | 22.00 | 158.49 | 19.71 | 93.54 |
| | | 1.4MHz | QPSK | 23.50 | 223.87 | 21.30 | 134.90 |
| | | | 16QAM | 22.20 | 165.96 | 19.72 | 93.76 |


UL VERFICATION SERVICES FORM ID: FCC_22_24_27_90
47173 BENICIA STREET, FREMONT, CA 94538, USA TEL: (510) 771-1000 FAX: (510) 661-0888
*This report shall not be reproduced except in full, without the written approval of UL Verification Services Inc.*

## LTE Band 12

| FCC Part 27 | | | | | | | |
|---|---|---|---|---|---|---|---|
| Band | Frequency Range(MHz) | BandWidth (MHz) | Modulation | Conducted | | Radiated | |
| | | | | AVG(dBm) | AVG(mW) | AVG(dBm) | AVG(mW) |
| LTE12 | 699~716 | 10MHz | QPSK | 23.40 | 218.78 | 16.68 | 46.56 |
| | | | 16QAM | 22.00 | 158.49 | 15.50 | 35.48 |
| | | 5MHz | QPSK | 23.40 | 218.78 | 16.13 | 41.02 |
| | | | 16QAM | 22.20 | 165.96 | 15.06 | 32.06 |
| | | 3MHz | QPSK | 23.40 | 218.78 | 15.60 | 36.31 |
| | | | 16QAM | 21.70 | 147.91 | 14.87 | 30.69 |
| | | 1.4MHz | QPSK | 23.40 | 218.78 | 15.28 | 33.73 |
| | | | 16QAM | 22.00 | 158.49 | 14.73 | 29.72 |

## LTE Band 25

| FCC Part 22/24/27 | | | | | | | |
|---|---|---|---|---|---|---|---|
| Band | Frequency Range(MHz) | BandWidth (MHz) | Modulation | Conducted | | Radiated | |
| | | | | AVG(dBm) | AVG(mW) | AVG(dBm) | AVG(mW) |
| LTE25 | 1850~1915 | 20MHz | QPSK | 23.70 | 234.42 | 25.40 | 346.74 |
| | | | 16QAM | 22.70 | 186.21 | 24.78 | 300.61 |
| | | 15MHz | QPSK | 23.70 | 234.42 | 25.30 | 338.84 |
| | | | 16QAM | 22.20 | 165.96 | 24.70 | 295.12 |
| | | 10MHz | QPSK | 23.70 | 234.42 | 25.30 | 338.84 |
| | | | 16QAM | 22.50 | 177.83 | 24.70 | 295.12 |
| | | 5MHz | QPSK | 23.70 | 234.42 | 25.50 | 354.81 |
| | | | 16QAM | 22.70 | 186.21 | 24.80 | 302.00 |
| | | 3MHz | QPSK | 23.70 | 234.42 | 25.69 | 370.68 |
| | | | 16QAM | 22.40 | 173.78 | 25.08 | 322.11 |
| | | 1.4MHz | QPSK | 23.70 | 234.42 | 25.87 | 386.37 |
| | | | 16QAM | 22.50 | 177.83 | 25.10 | 323.59 |


UL VERFICATION SERVICES FORM ID: FCC_22_24_27_90
47173 BENICIA STREET, FREMONT, CA 94538, USA TEL: (510) 771-1000 FAX: (510) 661-0888
*This report shall not be reproduced except in full, without the written approval of UL Verification Services Inc.*

## LTE Band 26 PART 90

| FCC Part 90 | | | | | | | |
|---|---|---|---|---|---|---|---|
| Band | Frequency Range(MHz) | BandWidth (MHz) | Modulation | Conducted | | Radiated | |
| | | | | AVG(dBm) | AVG(mW) | AVG(dBm) | AVG(mW) |
| LTE26 | 814~824 | 10MHz | QPSK | 23.60 | 229.09 | 20.55 | 113.50 |
| | | | 16QAM | 22.30 | 169.82 | 19.30 | 85.11 |
| | | 5MHz | QPSK | 23.60 | 229.09 | 20.45 | 110.92 |
| | | | 16QAM | 21.90 | 154.88 | 19.62 | 91.62 |
| | | 3MHz | QPSK | 23.60 | 229.09 | 20.66 | 116.41 |
| | | | 16QAM | 22.20 | 165.96 | 19.71 | 93.54 |
| | | 1.4MHz | QPSK | 23.60 | 229.09 | 19.91 | 97.95 |
| | | | 16QAM | 22.30 | 169.82 | 19.11 | 81.47 |

## LTE Band 26 PART 22

| FCC Part 22 | | | | | | | |
|---|---|---|---|---|---|---|---|
| Band | Frequency Range(MHz) | BandWidth (MHz) | Modulation | Conducted | | Radiated | |
| | | | | AVG(dBm) | AVG(mW) | AVG(dBm) | AVG(mW) |
| LTE26 | 824~849 | 15MHz | QPSK | 23.60 | 229.09 | 20.54 | 113.24 |
| | | | 16QAM | 22.10 | 162.18 | 19.47 | 88.51 |
| | | 10MHz | QPSK | 23.60 | 229.09 | 20.24 | 105.68 |
| | | | 16QAM | 22.30 | 169.82 | 20.01 | 100.23 |
| | | 5MHz | QPSK | 23.60 | 229.09 | 20.21 | 104.95 |
| | | | 16QAM | 22.30 | 169.82 | 19.31 | 85.31 |
| | | 3MHz | QPSK | 23.60 | 229.09 | 20.20 | 104.71 |
| | | | 16QAM | 22.20 | 165.96 | 19.44 | 87.90 |
| | | 1.4MHz | QPSK | 23.60 | 229.09 | 21.30 | 134.90 |
| | | | 16QAM | 22.30 | 169.82 | 19.72 | 93.76 |


*This report shall not be reproduced except in full, without the written approval of UL Verification Services Inc.*

**LTE Band 41**

| FCC Part 27 | | | | | | | |
|---|---|---|---|---|---|---|---|
| Band | Frequency Range(MHz) | BandWidth (MHz) | Modulation | Conducted | | Radiated | |
| | | | | AVG(dBm) | AVG(mW) | AVG(dBm) | AVG(mW) |
| LTE41 | 2496~2690 | 20MHz | QPSK | 23.70 | 234.42 | 25.41 | 347.54 |
| | | | 16QAM | 22.50 | 177.83 | 25.11 | 324.34 |
| | | 15MHz | QPSK | 23.60 | 229.09 | 25.51 | 355.63 |
| | | | 16QAM | 22.60 | 181.97 | 24.91 | 309.74 |
| | | 10MHz | QPSK | 23.70 | 234.42 | 25.81 | 381.07 |
| | | | 16QAM | 22.50 | 177.83 | 25.16 | 328.10 |
| | | 5MHz | QPSK | 23.70 | 234.42 | 26.63 | 460.26 |
| | | | 16QAM | 22.60 | 181.97 | 25.51 | 355.63 |


*This report shall not be reproduced except in full, without the written approval of UL Verification Services Inc.*

## 5.4. DESCRIPTION OF AVAILABLE ANTENNAS

The radio utilizes a PIFA antenna for the [List the bands supported] with a maximum peak gain as follow:

| Frequency (MHz) | Peak Gain (dBi) |
|---|---|
| GSM1900/CDMA BC1/WCDMA B2/LTE B2 1850~1910MHz | -3.5 |
| GSM850/CDMA BC0/WCDMA B5/LTE B5 824~849MHz | -7.1 |
| LTE B4 1710~1755MHz | -5.2 |
| LTE B12 699~716MHz | -5.9 |
| LTE25, 1850~1915MHz | -3.5 |
| CDMA BC10/LTE B26 814~849MHz | -7.1 |
| LTE B41 2496~2690MHz | 1.7 |


*This report shall not be reproduced except in full, without the written approval of UL Verification Services Inc.*

## 5.5. DESCRIPTION OF TEST SETUP

**SUPPORT EQUIPMENT**

| Support Equipment List | | | | |
|---|---|---|---|---|
| **Description** | **Manufacturer** | **Model** | **Serial Number** | **FCC ID** |
| AC Adapter | LG | MCS-04WD2 | EAY62991904 | N/A |
| Smart Case Cover | LG | LG-P1 | DK0227 | N/A |
| Wireless Charger | LG | WCD-110 | LF1212625283010049 | N/A |
| Earphone | LG | N/A | N/A | N/A |

**I/O CABLES (CONDUCTED SETUP)**

| I/O Cable List | | | | | | |
|---|---|---|---|---|---|---|
| **Cable No** | **Port** | **# of identical ports** | **Connector Type** | **Cable Type** | **Cable Length (m)** | **Remarks** |
| 1 | RF Out | 1 | Spectrum Analyzer | Shielded | None | NA |
| 2 | Antenna Port | 1 | EUT | Shielded | 0.1m | NA |
| 3 | RF In/Out | 1 | Communication Test Set | Shielded | 1m | NA |

**I/O CABLES (RADIATED SETUP)**

| I/O CABLE LIST | | | | | | |
|---|---|---|---|---|---|---|
| **Cable No.** | **Port** | **# of Identical Ports** | **Connector Type** | **Cable Type** | **Cable Length** | **Remarks** |
| 1 | USB | 1 | AC Adapter | Un-shielded | 1.2m | NA |
| 2 | Jack | 1 | Headset | Shielded | 1m | NA |
| 3 | RF In/out | 1 | Communication Test Set | Un-shielded | 2m | NA |

**TEST SETUP**

The EUT is continuously communicated to the call box during the tests.


*This report shall not be reproduced except in full, without the written approval of UL Verification Services Inc.*

**SETUP DIAGRAM FOR TESTS (CONDUCTED TEST SETUP)**

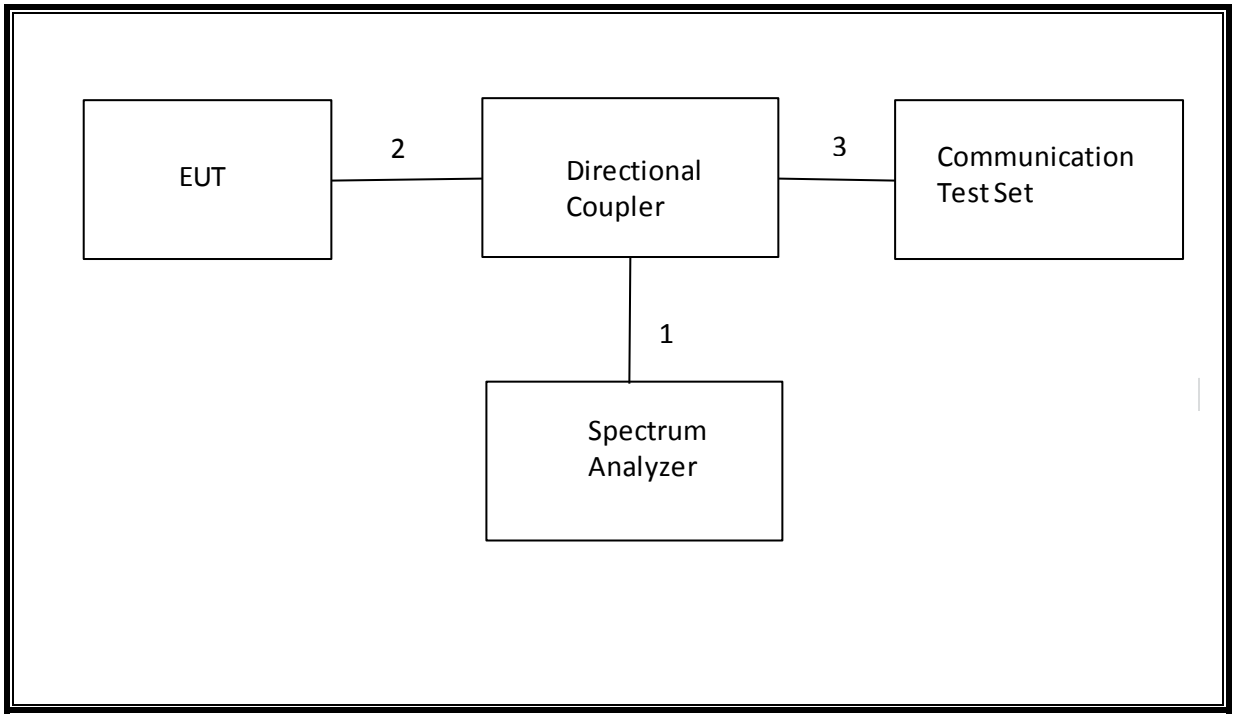



*This report shall not be reproduced except in full, without the written approval of UL Verification Services Inc.*

**SETUP DIAGRAM FOR TESTS (RADIATED TEST SETUP)**

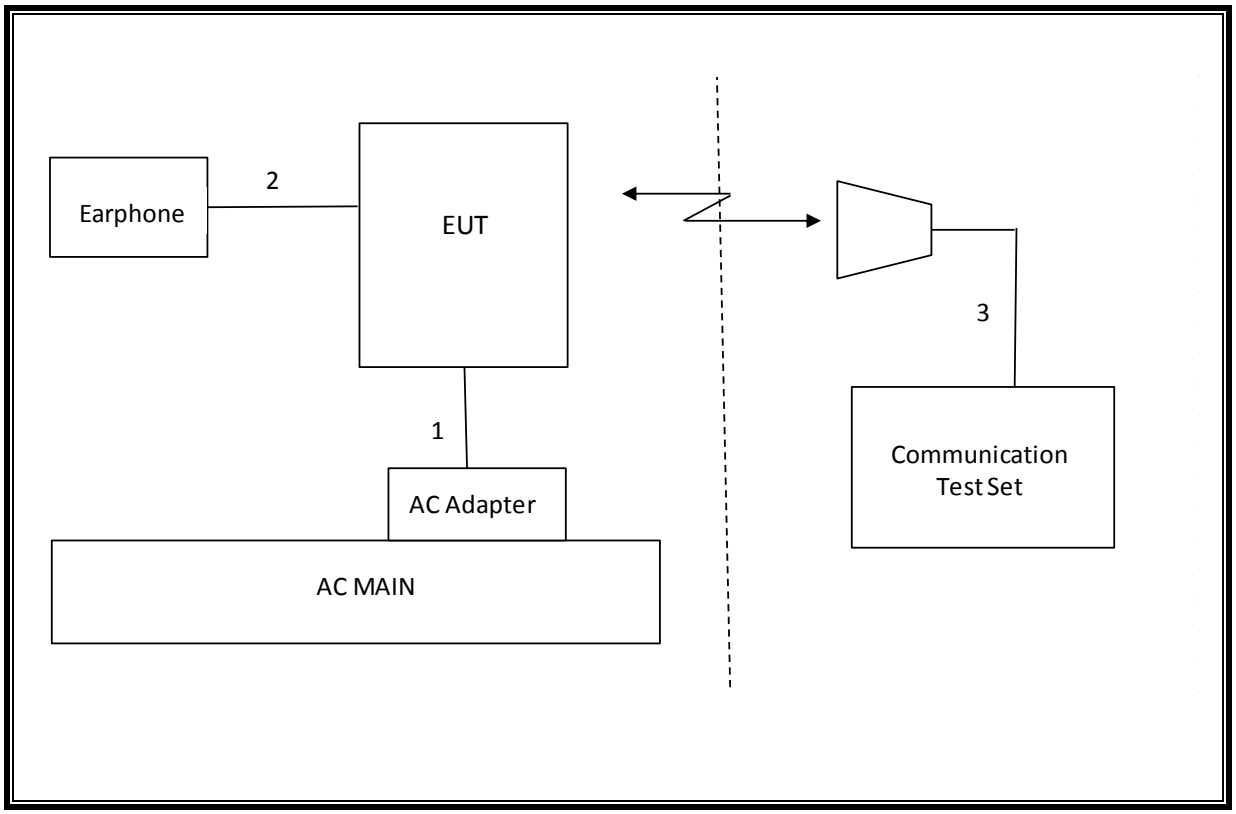



*This report shall not be reproduced except in full, without the written approval of UL Verification Services Inc.*

## 5.6. DESCRIPTION OF TEST SETUP

**Mode: LTE**

**PAR** – Full RB is used for testing.

**Occupied bandwidth**- full RB is used for testing and 10.1.2 table column 4 shows the RB allocation.

**Band edge**- 1 RB and full RB are used for testing and test plot are provided in section 10.2.1

**Out of Band Emission**- 1 RB is used for testing

**ERP/EIRP** – 1RB is used for testing and table 11.1.2 column 4 shows the RB allocation

**Spurious Emission**- 1RB is used for testing.



UL VERFICATION SERVICES FORM ID: FCC_22_24_27_90
47173 BENICIA STREET, FREMONT, CA 94538, USA TEL: (510) 771-1000 FAX: (510) 661-0888

*This report shall not be reproduced except in full, without the written approval of UL Verification Services Inc.*

# 6. TEST AND MEASUREMENT EQUIPMENT

The following test and measurement equipment was utilized for the tests documented in this report:

| TEST EQUIPMENT LIST | | | | |
|---|---|---|---|---|
| Description | Manufacturer | Model | Asset | Cal Due |
| Spectrum Analyzer, 44 GHz | Agilent / HP | E4446A | 123 | 10/28/15 |
| Antenna, Bilog, 2 GHz | Sunol Sciences | JB1 | T243 | 12/08/15 |
| Antenna, Horn, 18 GHz | EMCO | 3115 | C00783 | 10/25/15 |
| Antenna, Horn, 18 GHz | EMCO | 3115 | C00784 | 10/25/15 |
| Highpass Filter, 2.7 GHz | Micro-Tronics | HPM13194 | N02687 | CNR |
| Highpass Filter, 1.5 GHz | Micro-Tronics | HPM13193 | N02688 | CNR |
| Temperature / Humidity Chamber | Thermotron | SE 600-10-10 | C00930 | 05/12/15 |
| Communications Test Set | R&S | CMW500 | T159 | 07/02/15 |
| DC power supply, 8 V @ 3 A or 15 V | Agilent / HP | E3610A | None | CNR |
| Vector signal generator, 6 GHz | Agilent / HP | E4438C | None | 06/18/15 |
| Antenna, Tuned Dipole 400~1000 | ETS | 6502 | 158071 | 10/14/15 |
| Directional Coupler | RF-Lambda | RFDC5M06G15 | None | CNR |
| Antenna, Horn, 26.5 GHz | ARA | MWH-1826/B | C00589 | 12/17/15 |

| Test Software List | | | |
|---|---|---|---|
| Description | Manufacturer | Model | Version |
| Radiated Software | UL | UL EMC | Version 9.5, 07/22/14 |
| Conducted Software | UL | UL EMC | Version 9.5, 05/17/14 |
| CLT Software | UL | UL RF | Version 1.0, 02/02/15 |
| Antenna Port Software | UL | UL RF | Version 2.1.1.1, 1/20/15 |


*This report shall not be reproduced except in full, without the written approval of UL Verification Services Inc.*

# 7. SUMMARY TABLE

C2PC reason: Please see LG FCC Class II cover letter for details.

| FCC Part Section | RSS Section(s) | Test Description | Test Limit | Test Condition | Test Result | Note |
|---|---|---|---|---|---|---|
| 2.1049 | N/A | Occupied Band width (99%) | N/A | Conducted | Pass | See Original |
| 22.917(a)<br>24.238(a)<br>27.53(g)<br>90.691 | RSS-132(4.5.1)<br>RSS-133(6.5.1)<br>RSS-139(6.5.1) | Band Edge / Conducted Spurious Emission | -13dBm | | Pass | See Original |
| 27.53(m) | RSS-199(4.5) | | -25dBm | | Pass | See Original |
| 2.1046 | N/A | Conducted output power | N/A | | Pass | See Original |
| 27.53(m)<br>90.691 | RSS-199(4.5) | Emission Mask | | | Pass | See Original |
| 22.355<br>24.235<br>27.54<br>90.213 | RSS-132(4.3)<br>RSS-133(6.3)<br>RSS-139(6.3)<br>RSS-199(4.3) | Frequency Stability | 2.5PPM | | Pass | See Original |
| 22.913(a)(2) | RSS-132(4.4) | Effective Radiated Power | 38 dBm | Radiated | Pass | 30.80 dBm |
| 27.50(c)(10) | N/A | | 34.77 dBm | | Pass | 16.68 dBm |
| 90.635 | N/A | | 50dBm | | Pass | 21.3 dBm |
| 24.232(c )<br>27.50(h)(2) | RSS-133(6.4)<br>RSS-199(4.4) | Equivalent Isotropic Radiated Power | 33dBm | | Pass | 30.24 dBm |
| 27.50(d)(4) | RSS-139(6.4) | | 30dBm | | Pass | 22.25 dBm |
| 22.917(a)<br>24.238(a)<br>27.53(g) | RSS-132(4.5.1)<br>RSS-133(6.5.1)<br>RSS-139(6.5.1) | Radiated Spurious Emission | -13dBm | | Pass | -37 dBm |
| 27.53(m) | RSS-199(4.5) | | -25dBm | | Pass | -45.8 dBm |


UL VERFICATION SERVICES FORM ID: FCC_22_24_27_90
47173 BENICIA STREET, FREMONT, CA 94538, USA TEL: (510) 771-1000 FAX: (510) 661-0888
*This report shall not be reproduced except in full, without the written approval of UL Verification Services Inc.*

# 8. RF POWER OUTPUT VERIFICATION

## 8.1. GSM/GPRS/EDGE

Function: Menu select > GSM Mobile Station > GSM 850/900/1800/1900

Press Connection control to choose the different menus

Press RESET > choose all to reset all settings

Connection Press Signal Off to turn off the signal and change settings

Network Support > GSM+GPRS or GSM+EGPRS

Main Service > Packet Data

Service selection > Test Mode A – Auto Slot Config. off

MS Signal Press Slot Config bottom on the right twice to select and change the number of time slots and power setting

> Slot configuration > Uplink/Gamma

> 33 dBm for GPRS 850/900

> 30 dBm for GPRS1800/1900

BS Signal Enter the same channel number for TCH channel (test channel) and BCCH channel

Frequency Offset > + 0 Hz

Mode > BCCH and TCH

BCCH Level > -85 dBm (May need to adjust if link is not stable)

BCCH Channel > choose desire test channel [Enter the same channel number for TCH channel (test channel) and BCCH channel]

Channel Type > Off

P0> 4 dB

Slot Config > Unchanged (if already set under MS Signal)

TCH > choose desired test channel

Hopping > Off

Main Timeslot > 3 (Default)

Network Coding Scheme > CS4 (GPRS) and MCS5 ~ MCS9 (EGPRS)

Bit Stream > 2E9-1PSR Bit Pattern

AF/RF Enter appropriate offsets for Ext. Att. Output and Ext. Att. Input

Connection Press Signal On to turn on the signal and change settings




*This report shall not be reproduced except in full, without the written approval of UL Verification Services Inc.*

### 8.1.1. GSM OUTPUT POWER RESULT

| Mode | Coding Scheme | Time Slots | Ch No. | Freq. (MHz) | Burst Pwr (dBm) |
|---|---|---|---|---|---|
| GSM (Voice) | CS1 | 1 | 128 | 824.2 | 33.2 |
| | | | 190 | 836.6 | 33.2 |
| | | | 251 | 848.8 | 33.2 |
| GPRS (GMSK) | CS1 | 1 | 128 | 824.2 | 33.2 |
| | | | 190 | 836.6 | 33.2 |
| | | | 251 | 848.8 | 33.2 |
| | | 2 | 128 | 824.2 | 31.5 |
| | | | 190 | 836.6 | 31.5 |
| | | | 251 | 848.8 | 31.1 |
| EGPRS (8PSK) | MCS5 | 1 | 128 | 824.2 | 27.7 |
| | | | 190 | 836.6 | 27.7 |
| | | | 251 | 848.8 | 27.7 |
| | | 2 | 128 | 824.2 | 27.7 |
| | | | 190 | 836.6 | 27.6 |
| | | | 251 | 848.8 | 27.6 |

| Mode | Coding Scheme | Time Slots | Ch No. | Freq. (MHz) | Burst Pwr (dBm) |
|---|---|---|---|---|---|
| GSM (Voice) | CS1 | 1 | 512 | 1850.2 | 29.4 |
| | | | 661 | 1880.0 | 29.4 |
| | | | 810 | 1909.8 | 29.4 |
| GPRS (GMSK) | CS1 | 1 | 512 | 1850.2 | 29.4 |
| | | | 661 | 1880.0 | 29.4 |
| | | | 810 | 1909.8 | 29.4 |
| | | 2 | 512 | 1850.2 | 27.7 |
| | | | 661 | 1880.0 | 27.7 |
| | | | 810 | 1909.8 | 27.7 |
| EGPRS (8PSK) | MCS5 | 1 | 512 | 1850.2 | 26.7 |
| | | | 661 | 1880.0 | 26.7 |
| | | | 810 | 1909.8 | 26.7 |
| | | 2 | 512 | 1850.2 | 26.6 |
| | | | 661 | 1880.0 | 26.5 |
| | | | 810 | 1909.8 | 26.6 |


*This report shall not be reproduced except in full, without the written approval of UL Verification Services Inc.*

## 8.2. CDMA2000

### 8.2.1. 1xRTT

**TEST PROCEDURE**

This procedure assumes the Agilest 8960 Test Set has the following applications installed and with valid license.

| Application | Rev, License |
|---|---|
| CDMA2000 Mobile Test | B.13.08, L |

- Call Setup > Shift & Preset
- Cell Info > Cell Parameters > System ID (SID) > 7
  > Network ID (NID) > 1
- Protocol Rev > 6 (IS-2000-0)
- Radio Config (RC) > Please see following table or details
- FCH Service Option (SO) Setup > Please see following table or details
- Traffic Data Rate > Full
- TDSO SCH Info > F-SCH Parameters > F-SCH Data Rate > 153.6 kbps
  > R-SCH Parameters > R-SCH Data Rate > 153.6 kbps
- Rvs Power Ctrl > Active bits
  - Rvs Power Ctrl > All Up bits (Maximum TxPout)


UL VERFICATION SERVICES FORM ID: FCC_22_24_27_90
47173 BENICIA STREET, FREMONT, CA 94538, USA TEL: (510) 771-1000 FAX: (510) 661-0888
*This report shall not be reproduced except in full, without the written approval of UL Verification Services Inc.*

### 8.2.2. CDMA2000 OUTPUT POWER RESULT

| Band | Mode | Ch | Freq. (MHz) | Avg Pwr (dBm) |
|---|---|---|---|---|
| BC10 | RC1, SO55 (Loopback) | 476 | 817.90 | 25.2 |
| | | 580 | 820.50 | 25.2 |
| | | 684 | 823.10 | 25.2 |
| | RC3, SO55 (Loopback) | 476 | 817.90 | 25.2 |
| | | 580 | 820.50 | 25.2 |
| | | 684 | 823.10 | 25.2 |
| | RC3, SO32 (+F-SCH) | 476 | 817.90 | 25.2 |
| | | 580 | 820.50 | 25.2 |
| | | 684 | 823.10 | 25.2 |

| Band | Mode | Ch | Freq. (MHz) | Avg Pwr (dBm) |
|---|---|---|---|---|
| BC0 | RC1, SO55 (Loopback) | 1013 | 824.70 | 25.2 |
| | | 384 | 836.52 | 25.2 |
| | | 777 | 848.31 | 25.2 |
| | RC3, SO55 (Loopback) | 1013 | 824.70 | 25.2 |
| | | 384 | 836.52 | 25.2 |
| | | 777 | 848.31 | 25.2 |
| | RC3, SO32 (+F-SCH) | 1013 | 824.70 | 25.2 |
| | | 384 | 836.52 | 25.2 |
| | | 777 | 848.31 | 25.2 |

| Band | Mode | Ch | Freq. (MHz) | Avg Pwr (dBm) |
|---|---|---|---|---|
| BC1 | RC1, SO55 (Loopback) | 25 | 1851.25 | 24.9 |
| | | 600 | 1880.00 | 24.9 |
| | | 1175 | 1908.75 | 24.9 |
| | RC3, SO55 (Loopback) | 25 | 1851.25 | 24.9 |
| | | 600 | 1880.00 | 24.9 |
| | | 1175 | 1908.75 | 24.9 |
| | RC3, SO32 (+F-SCH) | 25 | 1851.25 | 24.9 |
| | | 600 | 1880.00 | 24.9 |
| | | 1175 | 1908.75 | 24.9 |


*This report shall not be reproduced except in full, without the written approval of UL Verification Services Inc.*

### 8.2.3. 1xEV-DO Release 0

**TEST PROCEDURE**

This procedure assumes the Agilent 8960 Test Set has the following applications installed and with valid license.

| Application | Rev, License |
|---|---|
| 1xEV-DO Terminal Test | A.09.13 |

EVDO Release 0 - RTAP

- Call Setup > Shift & Preset
- Call Control:
  - Access Network Info > Cell Parameters > Sector ID > 00000000 > Subnet Mask > 0
  - Generator Info > Termination Parameters > Max Forward Packet Duration > 16 Slots
- Call Parms:
  - Cell Power > -105.5 dBm/1.23 MHz
  - Cell Band > (Select US Cellular or US PCS)
  - Channel > (Enter channel number)
  - Application Config > Enhanced Test Application Protocol > RTAP
  - RTAP Rate > 153.6 kbps
  - Rvs Power Ctrl > Active bits
  - Protocol Rel > 0 (1xEV-DO)
- Press “Start Data Connection” when “Session Open” appear in “Active Cell”
- Rvs Power Ctrl > All Up bits (Maximum TxPout)

EVDO Release 0 - FTAP

- Call Setup > Shift & Preset
- Call Control:
  - Access Network Info > Cell Parameters > Sector ID > 00000000 > Subnet Mask > 0
  - Generator Info > Termination Parameters > Max Forward Packet Duration > 16 Slots
- Call Parms:
  - Cell Power > -105.5 dBm/1.23 MHz
  - Cell Band > (Select US Cellular or US PCS)
  - Channel > (Enter channel number)
  - Application Config > Enhanced Test Application Protocol > FTAP (default)
  - FTAP Rate > 307.2 kbps (2 Slot, QPSK)
  - Rvs Power Ctrl > Active bits
  - Protocol Rel > 0 (1xEV-DO)
- Press “Start Data Connection” when “Session Open” appear in “Active Cell”
- Rvs Power Ctrl > All Up bits (Maximum TxPout)


*This report shall not be reproduced except in full, without the written approval of UL Verification Services Inc.*

### 8.2.4. 1XEVDO REL 0 OUTPUT POWER RESULT

| Band | FTAP Rate | Channel | f (MHz) | Avg Pwr (dBm) |
|---|---|---|---|---|
| BC10 | 307.2 kbps (2 slot, QPSK) | 476 | 817.90 | 25.1 |
| | | 580 | 820.50 | 25.1 |
| | | 684 | 823.10 | 25.1 |

| Band | FTAP Rate | Channel | f (MHz) | Avg Pwr (dBm) |
|---|---|---|---|---|
| BC0 | 307.2 kbps (2 slot, QPSK) | 1013 | 824.70 | 25.0 |
| | | 384 | 836.52 | 24.9 |
| | | 777 | 848.31 | 24.9 |

| Band | FTAP Rate | Channel | f (MHz) | Avg Pwr (dBm) |
|---|---|---|---|---|
| BC1 | 307.2 kbps (2 slot, QPSK) | 25 | 1851.25 | 24.9 |
| | | 600 | 1880.00 | 24.9 |
| | | 1175 | 1908.75 | 24.9 |


*This report shall not be reproduced except in full, without the written approval of UL Verification Services Inc.*

### 8.2.5. 1xEV-DO Rev. A

**TEST PROCEDURE**

This procedure assumes the Agilent 8960 Test Set has the following applications installed and with valid license.

| Application | Rev, License |
|---|---|
| 1xEV-DO Terminal Test | A.09.13 |

EVDO Release A – RETAP

- Call Setup > Shift & Preset
- Cell Power > -60 dBm/1.23 MHz
- Protocol Rev > A (1xEV-DO-A)
- Application Config > Enhanced Test Application Protocol > RETAP
- R-Data Pkt Size > 4096
- Protocol Subtype Config > Release A Physical Layer Subtype > Subtype 2

> PL Subtype 2 Access Channel MAC Subtype > Default (Subtype 0)

- Access Network Info > Cell Parameters > Sector ID > 00000000 > Subnet Mask > 0
- Generator Info > Termination Parameters > Max Forward Packet Duration >16 Slots > ACK R-Data After > Subpacket 0 (All ACK)
- Rvs Power Ctrl > All Up bits (to get the maximum power)

EVDO Release A - FETAP

- Call Setup > Shift & Preset
- Cell Power > -60 dBm/1.23 MHz
- Protocol Rev > A (1xEV-DO-A)
- Application Config > Enhanced Test Application Protocol > FETAP
- F-Traffic Format > 4 (1024, 2,128) Canonical (307.2k, QPSK)
- Protocol Subtype Config > Release A Physical Layer Subtype > Subtype 2

> PL Subtype 2 Access Channel MAC Subtype > Default (Subtype 0)

- Access Network Info > Cell Parameters > Sector ID > 00000000 > Subnet Mask > 0
- Generator Info > Termination Parameters > Max Forward Packet Duration >16 Slots > ACK R-Data After > Subpacket 0 (All ACK)
- Rvs Power Ctrl > All Up bits (to get the maximum power)


*This report shall not be reproduced except in full, without the written approval of UL Verification Services Inc.*

### 8.2.6. 1xEVDO REV A OUTPUT RESULT

| Band | FETAP Traffic Format | Channel | f (MHz) | Avg Pwr (dBm) |
|---|---|---|---|---|
| BC10 | 307.2k, QPSK/ ACK channel is transmitted at all the slots | 476 | 817.90 | 25.0 |
| | | 580 | 820.50 | 25.0 |
| | | 684 | 823.10 | 25.0 |

| Band | FETAP Traffic Format | Channel | f (MHz) | Avg Pwr (dBm) |
|---|---|---|---|---|
| BC0 | 307.2k, QPSK/ ACK channel is transmitted at all the slots | 1013 | 824.70 | 24.9 |
| | | 384 | 836.52 | 24.9 |
| | | 777 | 848.31 | 24.8 |

| Band | FETAP Traffic Format | Channel | f (MHz) | Avg Pwr (dBm) |
|---|---|---|---|---|
| BC1 | 307.2k, QPSK/ ACK channel is transmitted at all the slots | 25 | 1851.25 | 24.9 |
| | | 600 | 1880.00 | 24.9 |
| | | 1175 | 1908.75 | 24.8 |


*This report shall not be reproduced except in full, without the written approval of UL Verification Services Inc.*

## 8.3. UMTS REL 99

**TEST PROCEDURE**

The following summary of these settings are illustrated below:

| | | |
|---|---|---|
| | Mode | Rel99 |
| | Subtest | - |
| WCDMA General Settings | Loopback Mode | Test Mode 1 |
| | Rel99 RMC | 12.2kbps RMC |
| | HSDPA FRC | Not Applicable |
| | HSUPA Test | Not Applicable |
| | Power Control Algorithm | Algorithm2 |
| | βc | Not Applicable |
| | βd | Not Applicable |
| | βec | Not Applicable |
| | βc/βd | 8/15 |
| | βhs | Not Applicable |
| | βed | Not Applicable |


UL VERFICATION SERVICES FORM ID: FCC_22_24_27_90
47173 BENICIA STREET, FREMONT, CA 94538, USA TEL: (510) 771-1000 FAX: (510) 661-0888
*This report shall not be reproduced except in full, without the written approval of UL Verification Services Inc.*

### 8.3.1. UMTS REL 99 OUTPUT POWER RESULT

| Band | Mode | UL Ch No. | Freq. (MHz) | MPR | Avg Pwr (dBm) |
|---|---|---|---|---|---|
| W-CDMA Band V | Rel 99 (RMC, 12.2 kbps) | 4132 | 826.4 | 0 | 23.7 |
| | | 4183 | 836.6 | 0 | 23.7 |
| | | 4233 | 846.6 | 0 | 23.7 |

| Band | Mode | UL Ch No. | Freq. (MHz) | MPR | Avg Pwr (dBm) |
|---|---|---|---|---|---|
| W-CDMA Band II | Rel 99 (RMC, 12.2 kbps) | 9262 | 1852.4 | 0 | 23.7 |
| | | 9400 | 1880.0 | 0 | 23.7 |
| | | 9538 | 1907.6 | 0 | 23.7 |


*This report shall not be reproduced except in full, without the written approval of UL Verification Services Inc.*

## 8.4. UMTS HSDPA

The following 4 Sub-tests were completed according to Release 5 procedures in section 5.2 of 3GPP TS34.121. A summary of these settings are illustrated below:

| | Mode | Rel5 HSDPA | | | |
|---|---|---|---|---|---|
| | Subtest | 1 | 2 | 3 | 4 |
| WCDMA General Settings | Loopback Mode | Test Mode 1 | | | |
| | Rel99 RMC | 12.2kbps RMC | | | |
| | HSDPA FRC | H-Set1 | | | |
| | Power Control Algorithm | Algorithm 2 | | | |
| | βc | 2/15 | 12/15 | 15/15 | 15/15 |
| | βd | 15/15 | 15/15 | 8/15 | 4/15 |
| | Bd (SF) | 64 | | | |
| | βc/βd | 2/15 | 12/15 | 15/8 | 15/4 |
| | βhs | 4/15 | 24/15 | 30/15 | 30/15 |
| | MPR (dB) | 0 | 0 | 0.5 | 0.5 |
| HSDPA Specific Settings | $D_{ACK}$ | 8 | | | |
| | $D_{NAK}$ | 8 | | | |
| | DCQI | 8 | | | |
| | Ack-Nack repetition factor | 3 | | | |
| | CQI Feedback (Table 5.2B.4) | 4ms | | | |
| | CQI Repetition Factor (Table 5.2B.4) | 2 | | | |
| | Ahs =βhs/βc | 30/15 | | | |


UL VERFICATION SERVICES FORM ID: FCC_22_24_27_90
47173 BENICIA STREET, FREMONT, CA 94538, USA TEL: (510) 771-1000 FAX: (510) 661-0888
*This report shall not be reproduced except in full, without the written approval of UL Verification Services Inc.*

### 8.4.1. UMTS HSDPA OUTPUT POWER RESULT

| Band | Mode | UL Ch No. | Freq. (MHz) | MPR | Avg Pwr (dBm) |
|---|---|---|---|---|---|
| W-CDMA Band V | Subtest 1 | 4132 | 826.4 | 0 | 23.7 |
| | | 4183 | 836.6 | 0 | 23.7 |
| | | 4233 | 846.6 | 0 | 23.7 |
| | Subtest 2 | 4132 | 826.4 | 0 | 23.7 |
| | | 4183 | 836.6 | 0 | 23.7 |
| | | 4233 | 846.6 | 0 | 23.7 |
| | Subtest 3 | 4132 | 826.4 | 0.5 | 23.3 |
| | | 4183 | 836.6 | 0.5 | 23.3 |
| | | 4233 | 846.6 | 0.5 | 23.2 |
| | Subtest 4 | 4132 | 826.4 | 0.5 | 23.3 |
| | | 4183 | 836.6 | 0.5 | 23.2 |
| | | 4233 | 846.6 | 0.5 | 23.2 |

| Band | Mode | UL Ch No. | Freq. (MHz) | MPR | 23.8 |
|---|---|---|---|---|---|
| W-CDMA Band II | Subtest 1 | 9262 | 1852.4 | 0 | 23.7 |
| | | 9400 | 1880.0 | 0 | 23.7 |
| | | 9538 | 1907.6 | 0 | 23.7 |
| | Subtest 2 | 9262 | 1852.4 | 0 | 23.7 |
| | | 9400 | 1880.0 | 0 | 23.7 |
| | | 9538 | 1907.6 | 0 | 23.7 |
| | Subtest 3 | 9262 | 1852.4 | 0.5 | 22.4 |
| | | 9400 | 1880.0 | 0.5 | 22.3 |
| | | 9538 | 1907.6 | 0.5 | 22.6 |
| | Subtest 4 | 9262 | 1852.4 | 0.5 | 21.8 |
| | | 9400 | 1880.0 | 0.5 | 22.6 |
| | | 9538 | 1907.6 | 0.5 | 21.8 |


*This report shall not be reproduced except in full, without the written approval of UL Verification Services Inc.*

## 8.5. UMTS HSUPA

**TEST PROCEDURE**

The following summary of these settings are illustrated below: (ETSI TS 134.121-1 Table C.11.1)

| | Mode | Rel6 HSUPA | Rel6 HSUPA | Rel6 HSUPA | Rel6 HSUPA | Rel6 HSUPA |
|---|---|---|---|---|---|---|
| | Subtest | 1 | 2 | 3 | 4 | 5 |
| WCDMA General Settings | Loopback Mode | Test Mode 1 | | | | |
| | P-CPICH (dB) | -10 | | | | |
| | P-CCPCH (dB) | -12 | | | | |
| | SCH (dB) | -12 | | | | |
| | PICH(dB) | -15 | | | | |
| | DPCH (dB) | -9 | | | | |
| | HS-SCCH_1 (dB) | -8 | | | | |
| | HS-PDSCH (dB) | -3 | | | | |
| | Rel99 RMC | 12.2kbps RMC | | | | |
| | HSDPA FRC | H-Set1 | | | | |
| | HSUPA Test | HSUPA Loopback | | | | |
| | Power Control Algorithm | Algorithm2 | | | | |
| | Bc | 11/15 | 6/15 | 15/15 | 2/15 | 15/15 |
| | Bd | 15/15 | 15/15 | 9/15 | 15/15 | 15/15 |
| | Bec | 209/225 | 12/15 | 30/15 | 2/15 | 5/15 |
| | βc/βd | 11/15 | 6/15 | 15/9 | 2/15 | 15/15 |
| | Bhs | 22/15 | 12/15 | 30/15 | 4/15 | 30/15 |
| | βed (note1) | 1309/225 | 94/75 | 47/15<br>47/15 | 56/75 | 134/15 |
| | MPR | 0 | 2 | 1 | 2 | 0 |
| HSDPA Specific Settings | DACK | 8 | | | | |
| | DNAK | 8 | | | | |
| | DCQI | 8 | | | | |
| | Ack-Nack repetition factor | 3 | | | | |
| | CQI Feedback (Table 5.2B.4) | 4ms | | | | |
| | CQI Repetition Factor (Table 5.2B.4) | 2 | | | | |
| | Ahs = βhs/βc | 30/15 | | | | |
| HSUPA Specific Settings | D E-DPCCH | 6 | 8 | 8 | 5 | 7 |
| | DHARQ | 0 | 0 | 0 | 0 | 0 |
| | AG Index | 20 | 12 | 15 | 17 | 21 |
| | Reference E-TFCIs | 5 | 5 | 2 | 5 | 5 |
| | ETFCI (from 34.121 Table C.11.1.3) | 75 | 67 | 92 | 71 | 81 |
| | Associated Max UL Data Rate kbps | 242.1 | 174.9 | 482.8 | 205.8 | 308.9 |
| | Reference E_TFCIs | E-TFCI 11<br>E-TFCI PO 4<br>E-TFCI 67<br>E-TFCI PO 18<br>E-TFCI 71<br>E-TFCI PO 23<br>E-TFCI 75<br>E-TFCI PO 26<br>E-TFCI 81<br>E-TFCI PO 27 | | E-TFCI 11<br>E-TFCI PO 4<br>E-TFCI 92<br>E-TFCI PO 18 | E-TFCI 11<br>E-TFCI PO 4<br>E-TFCI 67<br>E-TFCI PO 18<br>E-TFCI 71<br>E-TFCI PO 23<br>E-TFCI 75<br>E-TFCI PO 26<br>E-TFCI 81<br>E-TFCI PO 27 | |

Note1: βed cannot be set directly, it is set by Absolute Grant Value.


*This report shall not be reproduced except in full, without the written approval of UL Verification Services Inc.*

### 8.5.1. UMTS HSUPA OUTPUT POWER RESULT

| Band | Mode | UL Ch No. | Freq. (MHz) | MPR | Avg Pwr (dBm) |
|---|---|---|---|---|---|
| W-CDMA Band V | Subtest 1 | 4132 | 826.4 | 0 | 21.7 |
| | | 4183 | 836.6 | 0 | 21.7 |
| | | 4233 | 846.6 | 0 | 21.7 |
| | Subtest 2 | 4132 | 826.4 | 2 | 21.7 |
| | | 4183 | 836.6 | 2 | 21.7 |
| | | 4233 | 846.6 | 2 | 21.7 |
| | Subtest 3 | 4132 | 826.4 | 1 | 21.5 |
| | | 4183 | 836.6 | 1 | 21.4 |
| | | 4233 | 846.6 | 1 | 21.8 |
| | Subtest 4 | 4132 | 826.4 | 2 | 21.7 |
| | | 4183 | 836.6 | 2 | 21.7 |
| | | 4233 | 846.6 | 2 | 21.7 |
| | Subtest 5 | 4132 | 826.4 | 0 | 23.7 |
| | | 4183 | 836.6 | 0 | 23.7 |
| | | 4233 | 846.6 | 0 | 23.7 |

| Band | Mode | UL Ch No. | Freq. (MHz) | MPR | Avg Pwr (dBm) |
|---|---|---|---|---|---|
| W-CDMA Band II | Subtest 1 | 9262 | 1852.4 | 0 | 21.8 |
| | | 9400 | 1880.0 | 0 | 21.8 |
| | | 9538 | 1907.6 | 0 | 21.8 |
| | Subtest 2 | 9262 | 1852.4 | 2 | 21.7 |
| | | 9400 | 1880.0 | 2 | 21.7 |
| | | 9538 | 1907.6 | 2 | 21.7 |
| | Subtest 3 | 9262 | 1852.4 | 1 | 21.5 |
| | | 9400 | 1880.0 | 1 | 21.0 |
| | | 9538 | 1907.6 | 1 | 21.9 |
| | Subtest 4 | 9262 | 1852.4 | 2 | 21.7 |
| | | 9400 | 1880.0 | 2 | 21.7 |
| | | 9538 | 1907.6 | 2 | 21.7 |
| | Subtest 5 | 9262 | 1852.4 | 0 | 23.7 |
| | | 9400 | 1880.0 | 0 | 23.7 |
| | | 9538 | 1907.6 | 0 | 23.7 |


*This report shall not be reproduced except in full, without the written approval of UL Verification Services Inc.*

# 8.6. LTE OUTPUT VERIFICATION

## 8.6.1. LTE OUTPUT RESULT

**LTE Band 2**

| Band | BW (MHz) | Mode | RB Allocation | RB offset | Target MPR | Avg Pwr (dBm) | | |
|---|---|---|---|---|---|---|---|---|
| | | | | | | 18700 | 18900 | 19100 |
| | | | | | | 1860 MHz | 1880 MHz | 1900 MHz |
| LTE Band 2 | 20 | QPSK | 1 | 0 | 0 | 23.70 | 23.70 | 23.60 |
| | | | 1 | 49 | 0 | 23.70 | 23.70 | 23.50 |
| | | | 1 | 99 | 0 | 23.70 | 22.70 | 23.60 |
| | | | 50 | 0 | 1 | 22.70 | 22.70 | 22.60 |
| | | | 50 | 24 | 1 | 22.70 | 22.70 | 22.60 |
| | | | 50 | 50 | 1 | 22.70 | 22.60 | 22.60 |
| | | | 100 | 0 | 1 | 22.70 | 22.60 | 22.60 |
| | | 16QAM | 1 | 0 | 1 | 22.70 | 22.70 | 22.40 |
| | | | 1 | 49 | 1 | 22.70 | 22.60 | 22.10 |
| | | | 1 | 99 | 1 | 22.70 | 22.50 | 22.10 |
| | | | 50 | 0 | 2 | 21.70 | 21.70 | 21.60 |
| | | | 50 | 24 | 2 | 21.70 | 21.60 | 21.50 |
| | | | 50 | 50 | 2 | 21.70 | 21.60 | 21.50 |
| | | | 100 | 0 | 2 | 21.70 | 21.60 | 21.70 |

| Band | BW (MHz) | Mode | RB Allocation | RB offset | Target MPR | Avg Pwr (dBm) | | |
|---|---|---|---|---|---|---|---|---|
| | | | | | | 18675 | 18900 | 19125 |
| | | | | | | 1857.5 MHz | 1880 MHz | 1902.5 MHz |
| LTE Band 2 | 15 | QPSK | 1 | 0 | 0 | 23.60 | 23.60 | 23.60 |
| | | | 1 | 37 | 0 | 23.40 | 23.50 | 23.60 |
| | | | 1 | 74 | 0 | 23.60 | 23.50 | 23.60 |
| | | | 36 | 0 | 1 | 22.70 | 22.70 | 22.50 |
| | | | 36 | 20 | 1 | 22.70 | 22.60 | 22.60 |
| | | | 36 | 39 | 1 | 22.70 | 22.60 | 22.60 |
| | | | 75 | 0 | 1 | 22.70 | 22.60 | 22.60 |
| | | 16QAM | 1 | 0 | 1 | 22.20 | 22.10 | 22.20 |
| | | | 1 | 37 | 1 | 22.10 | 22.00 | 22.00 |
| | | | 1 | 74 | 1 | 22.10 | 22.00 | 22.00 |
| | | | 36 | 0 | 2 | 21.70 | 21.70 | 21.50 |
| | | | 36 | 20 | 2 | 21.70 | 21.70 | 21.60 |
| | | | 36 | 39 | 2 | 21.70 | 21.70 | 21.60 |
| | | | 75 | 0 | 2 | 21.70 | 21.70 | 21.60 |


*This report shall not be reproduced except in full, without the written approval of UL Verification Services Inc.*

| Band | BW (MHz) | Mode | RB Allocation | RB offset | Target MPR | Avg Pwr (dBm) | | |
|---|---|---|---|---|---|---|---|---|
| | | | | | | 18650 | 18900 | 19150 |
| | | | | | | 1855 MHz | 1880 MHz | 1905 MHz |
| LTE Band 2 | 10 | QPSK | 1 | 0 | 0 | 23.70 | 23.70 | 23.70 |
| | | | 1 | 25 | 0 | 23.70 | 23.70 | 23.70 |
| | | | 1 | 49 | 0 | 23.70 | 23.70 | 23.50 |
| | | | 25 | 0 | 1 | 22.70 | 22.70 | 22.60 |
| | | | 25 | 12 | 1 | 22.70 | 22.70 | 22.60 |
| | | | 25 | 25 | 1 | 22.60 | 22.70 | 22.50 |
| | | | 50 | 0 | 1 | 22.70 | 22.70 | 22.60 |
| | | 16QAM | 1 | 0 | 1 | 22.40 | 22.30 | 22.00 |
| | | | 1 | 25 | 1 | 22.20 | 22.10 | 22.00 |
| | | | 1 | 49 | 1 | 22.20 | 22.20 | 21.80 |
| | | | 25 | 0 | 2 | 21.70 | 21.70 | 21.70 |
| | | | 25 | 12 | 2 | 21.70 | 21.70 | 21.70 |
| | | | 25 | 25 | 2 | 21.70 | 21.70 | 21.60 |
| | | | 50 | 0 | 2 | 21.70 | 21.70 | 21.60 |

| Band | BW (MHz) | Mode | RB Allocation | RB offset | Target MPR | Avg Pwr (dBm) | | |
|---|---|---|---|---|---|---|---|---|
| | | | | | | 18625 | 18900 | 19175 |
| | | | | | | 1852.5 MHz | 1880 MHz | 1907.5 MHz |
| LTE Band 2 | 5 | QPSK | 1 | 0 | 0 | 23.70 | 23.70 | 23.60 |
| | | | 1 | 12 | 0 | 23.60 | 23.70 | 23.40 |
| | | | 1 | 24 | 0 | 23.70 | 23.70 | 23.50 |
| | | | 12 | 0 | 1 | 22.70 | 22.70 | 22.50 |
| | | | 12 | 7 | 1 | 22.70 | 22.70 | 22.60 |
| | | | 12 | 13 | 1 | 22.70 | 22.60 | 22.50 |
| | | | 25 | 0 | 1 | 22.70 | 22.60 | 22.50 |
| | | 16QAM | 1 | 0 | 1 | 22.00 | 22.00 | 22.50 |
| | | | 1 | 12 | 1 | 21.90 | 22.00 | 22.50 |
| | | | 1 | 24 | 1 | 21.90 | 22.00 | 22.40 |
| | | | 12 | 0 | 2 | 21.70 | 21.70 | 21.60 |
| | | | 12 | 7 | 2 | 21.70 | 21.70 | 21.60 |
| | | | 12 | 13 | 2 | 21.70 | 21.70 | 21.60 |
| | | | 25 | 0 | 2 | 21.70 | 21.70 | 21.50 |


*This report shall not be reproduced except in full, without the written approval of UL Verification Services Inc.*

| Band | BW (MHz) | Mode | RB Allocation | RB offset | Target MPR | Avg Pwr (dBm) | | |
|---|---|---|---|---|---|---|---|---|
| | | | | | | 18615 | 18900 | 19185 |
| | | | | | | 1851.5 MHz | 1880 MHz | 1908.5 MHz |
| LTE Band 2 | 3 | QPSK | 1 | 0 | 0 | 23.70 | 23.60 | 23.70 |
| | | | 1 | 8 | 0 | 23.70 | 23.60 | 23.60 |
| | | | 1 | 14 | 0 | 23.70 | 23.60 | 23.70 |
| | | | 8 | 0 | 1 | 22.70 | 22.60 | 22.60 |
| | | | 8 | 4 | 1 | 22.70 | 22.70 | 22.50 |
| | | | 8 | 7 | 1 | 22.60 | 22.60 | 22.50 |
| | | | 15 | 0 | 1 | 22.70 | 22.60 | 22.50 |
| | | 16QAM | 1 | 0 | 1 | 22.10 | 22.00 | 21.90 |
| | | | 1 | 8 | 1 | 22.10 | 22.00 | 21.70 |
| | | | 1 | 14 | 1 | 22.10 | 22.10 | 21.90 |
| | | | 8 | 0 | 2 | 21.70 | 21.70 | 21.50 |
| | | | 8 | 4 | 2 | 21.70 | 21.70 | 21.50 |
| | | | 8 | 7 | 2 | 21.70 | 21.70 | 21.40 |
| | | | 15 | 0 | 2 | 21.70 | 21.70 | 21.40 |

| Band | BW (MHz) | Mode | RB Allocation | RB offset | Target MPR | Avg Pwr (dBm) | | |
|---|---|---|---|---|---|---|---|---|
| | | | | | | 18607 | 18900 | 19193 |
| | | | | | | 1850.7 MHz | 1880 MHz | 1909.3 MHz |
| LTE Band 2 | 1.4 | QPSK | 1 | 0 | 0 | 23.70 | 23.70 | 23.60 |
| | | | 1 | 3 | 0 | 23.70 | 23.70 | 23.70 |
| | | | 1 | 5 | 0 | 23.70 | 23.70 | 23.70 |
| | | | 3 | 0 | 0 | 23.60 | 23.60 | 23.40 |
| | | | 3 | 1 | 0 | 23.60 | 23.60 | 23.70 |
| | | | 3 | 3 | 0 | 23.60 | 23.60 | 23.50 |
| | | | 6 | 0 | 1 | 22.60 | 22.60 | 22.50 |
| | | 16QAM | 1 | 0 | 1 | 22.10 | 21.90 | 21.70 |
| | | | 1 | 3 | 1 | 22.10 | 22.10 | 22.00 |
| | | | 1 | 5 | 1 | 22.10 | 22.00 | 21.70 |
| | | | 3 | 0 | 1 | 22.20 | 22.10 | 21.90 |
| | | | 3 | 1 | 1 | 22.30 | 22.20 | 22.00 |
| | | | 3 | 3 | 1 | 22.20 | 22.20 | 22.00 |
| | | | 6 | 0 | 2 | 21.70 | 21.70 | 21.60 |


*This report shall not be reproduced except in full, without the written approval of UL Verification Services Inc.*

**LTE Band 4**

| Band | BW (MHz) | Mode | RB Allocation | RB offset | Target MPR | Avg Pwr (dBm) | | |
|---|---|---|---|---|---|---|---|---|
| | | | | | | 20050 | 20175 | 20300 |
| | | | | | | 1720 MHz | 1732.5 MHz | 1745 MHz |
| LTE Band 4 | 20 | QPSK | 1 | 0 | 0 | 23.70 | 23.70 | 23.70 |
| | | | 1 | 49 | 0 | 23.70 | 23.70 | 23.70 |
| | | | 1 | 99 | 0 | 23.70 | 23.70 | 23.60 |
| | | | 50 | 0 | 1 | 22.70 | 22.70 | 22.70 |
| | | | 50 | 24 | 1 | 22.70 | 22.60 | 22.70 |
| | | | 50 | 50 | 1 | 22.70 | 22.60 | 22.70 |
| | | | 100 | 0 | 1 | 22.70 | 22.70 | 22.70 |
| | | 16QAM | 1 | 0 | 1 | 22.70 | 22.70 | 22.70 |
| | | | 1 | 49 | 1 | 22.70 | 22.70 | 22.40 |
| | | | 1 | 99 | 1 | 22.70 | 22.70 | 22.30 |
| | | | 50 | 0 | 2 | 21.70 | 21.70 | 21.70 |
| | | | 50 | 24 | 2 | 21.70 | 21.60 | 21.60 |
| | | | 50 | 50 | 2 | 21.60 | 21.60 | 21.60 |
| | | | 100 | 0 | 2 | 21.70 | 21.70 | 21.70 |

| Band | BW (MHz) | Mode | RB Allocation | RB offset | Target MPR | Avg Pwr (dBm) | | |
|---|---|---|---|---|---|---|---|---|
| | | | | | | 20025 | 20175 | 20325 |
| | | | | | | 1717.5 MHz | 1732.5 MHz | 1747.5 MHz |
| LTE Band 4 | 15 | QPSK | 1 | 0 | 0 | 23.70 | 23.70 | 23.70 |
| | | | 1 | 37 | 0 | 23.70 | 23.60 | 23.60 |
| | | | 1 | 74 | 0 | 23.60 | 23.60 | 23.50 |
| | | | 36 | 0 | 1 | 22.60 | 22.70 | 22.60 |
| | | | 36 | 20 | 1 | 22.60 | 22.60 | 22.60 |
| | | | 36 | 39 | 1 | 22.60 | 22.60 | 22.60 |
| | | | 75 | 0 | 1 | 22.60 | 22.60 | 22.60 |
| | | 16QAM | 1 | 0 | 1 | 22.20 | 22.40 | 22.30 |
| | | | 1 | 37 | 1 | 22.10 | 22.20 | 22.20 |
| | | | 1 | 74 | 1 | 22.10 | 22.10 | 22.00 |
| | | | 36 | 0 | 2 | 21.60 | 21.70 | 21.70 |
| | | | 36 | 20 | 2 | 21.70 | 21.60 | 21.70 |
| | | | 36 | 39 | 2 | 21.70 | 21.60 | 21.60 |
| | | | 75 | 0 | 2 | 21.70 | 21.60 | 21.70 |


*This report shall not be reproduced except in full, without the written approval of UL Verification Services Inc.*

| Band | BW (MHz) | Mode | RB Allocation | RB offset | Target MPR | Avg Pwr (dBm) | | |
|---|---|---|---|---|---|---|---|---|
| | | | | | | 20000 | 20175 | 20350 |
| | | | | | | 1715 MHz | 1732.5 MHz | 1750 MHz |
| LTE Band 4 | 10 | QPSK | 1 | 0 | 0 | 23.70 | 23.70 | 23.70 |
| | | | 1 | 25 | 0 | 23.70 | 23.70 | 23.70 |
| | | | 1 | 49 | 0 | 23.70 | 23.70 | 23.60 |
| | | | 25 | 0 | 1 | 22.70 | 22.60 | 22.50 |
| | | | 25 | 12 | 1 | 22.60 | 22.60 | 22.50 |
| | | | 25 | 25 | 1 | 22.60 | 22.60 | 22.50 |
| | | | 50 | 0 | 1 | 22.60 | 22.60 | 22.50 |
| | | 16QAM | 1 | 0 | 1 | 22.60 | 22.60 | 22.30 |
| | | | 1 | 25 | 1 | 22.30 | 22.30 | 22.10 |
| | | | 1 | 49 | 1 | 22.30 | 22.30 | 22.10 |
| | | | 25 | 0 | 2 | 21.70 | 21.70 | 21.70 |
| | | | 25 | 12 | 2 | 21.70 | 21.70 | 21.70 |
| | | | 25 | 25 | 2 | 21.70 | 21.70 | 21.60 |
| | | | 50 | 0 | 2 | 21.70 | 21.70 | 21.60 |

| Band | BW (MHz) | Mode | RB Allocation | RB offset | Target MPR | Avg Pwr (dBm) | | |
|---|---|---|---|---|---|---|---|---|
| | | | | | | 19975 | 20175 | 20375 |
| | | | | | | 1712.5 MHz | 1732.5 MHz | 1752.5 MHz |
| LTE Band 4 | 5 | QPSK | 1 | 0 | 0 | 23.70 | 23.70 | 23.60 |
| | | | 1 | 12 | 0 | 23.70 | 23.60 | 23.50 |
| | | | 1 | 24 | 0 | 23.70 | 23.70 | 23.50 |
| | | | 12 | 0 | 1 | 22.60 | 22.60 | 22.60 |
| | | | 12 | 7 | 1 | 22.60 | 22.60 | 22.50 |
| | | | 12 | 13 | 1 | 22.60 | 22.60 | 22.50 |
| | | | 25 | 0 | 1 | 22.60 | 22.60 | 22.50 |
| | | 16QAM | 1 | 0 | 1 | 22.10 | 22.10 | 22.70 |
| | | | 1 | 12 | 1 | 22.10 | 22.10 | 22.70 |
| | | | 1 | 24 | 1 | 22.00 | 22.10 | 22.70 |
| | | | 12 | 0 | 2 | 21.60 | 21.60 | 21.70 |
| | | | 12 | 7 | 2 | 21.60 | 21.70 | 21.60 |
| | | | 12 | 13 | 2 | 21.70 | 21.70 | 21.60 |
| | | | 25 | 0 | 2 | 21.70 | 21.70 | 21.50 |


*This report shall not be reproduced except in full, without the written approval of UL Verification Services Inc.*

| Band | BW (MHz) | Mode | RB Allocation | RB offset | Target MPR | Avg Pwr (dBm) | | |
|---|---|---|---|---|---|---|---|---|
| | | | | | | 19965 | 20175 | 20385 |
| | | | | | | 1711.5 MHz | 1732.5 MHz | 1753.5 MHz |
| LTE Band 4 | 3 | QPSK | 1 | 0 | 0 | 23.70 | 23.70 | 23.70 |
| | | | 1 | 8 | 0 | 23.70 | 23.70 | 23.70 |
| | | | 1 | 14 | 0 | 23.70 | 23.70 | 23.70 |
| | | | 8 | 0 | 1 | 22.60 | 22.60 | 22.50 |
| | | | 8 | 4 | 1 | 22.60 | 22.60 | 22.50 |
| | | | 8 | 7 | 1 | 22.60 | 22.60 | 22.50 |
| | | | 15 | 0 | 1 | 22.60 | 22.60 | 22.60 |
| | | 16QAM | 1 | 0 | 1 | 22.20 | 22.30 | 22.10 |
| | | | 1 | 8 | 1 | 22.30 | 22.30 | 22.00 |
| | | | 1 | 14 | 1 | 22.20 | 22.20 | 22.00 |
| | | | 8 | 0 | 2 | 21.60 | 21.60 | 21.50 |
| | | | 8 | 4 | 2 | 21.70 | 21.70 | 21.50 |
| | | | 8 | 7 | 2 | 21.70 | 21.60 | 21.50 |
| | | | 15 | 0 | 2 | 21.70 | 21.70 | 21.50 |

| Band | BW (MHz) | Mode | RB Allocation | RB offset | Target MPR | Avg Pwr (dBm) | | |
|---|---|---|---|---|---|---|---|---|
| | | | | | | 19957 | 20175 | 20393 |
| | | | | | | 1710.7 MHz | 1732.5 MHz | 1754.3 MHz |
| LTE Band 4 | 1.4 | QPSK | 1 | 0 | 0 | 23.70 | 23.70 | 23.70 |
| | | | 1 | 3 | 0 | 23.70 | 23.70 | 23.70 |
| | | | 1 | 5 | 0 | 23.70 | 23.70 | 23.70 |
| | | | 3 | 0 | 0 | 23.60 | 23.60 | 23.60 |
| | | | 3 | 1 | 0 | 23.70 | 23.70 | 23.70 |
| | | | 3 | 3 | 0 | 23.70 | 23.60 | 23.60 |
| | | | 6 | 0 | 1 | 22.50 | 22.60 | 22.70 |
| | | 16QAM | 1 | 0 | 1 | 22.10 | 22.10 | 22.00 |
| | | | 1 | 3 | 1 | 22.30 | 22.30 | 22.20 |
| | | | 1 | 5 | 1 | 22.20 | 22.20 | 22.00 |
| | | | 3 | 0 | 1 | 22.30 | 22.30 | 22.20 |
| | | | 3 | 1 | 1 | 22.40 | 22.40 | 22.20 |
| | | | 3 | 3 | 1 | 22.30 | 22.40 | 22.20 |
| | | | 6 | 0 | 2 | 21.70 | 21.70 | 21.70 |


*This report shall not be reproduced except in full, without the written approval of UL Verification Services Inc.*

**LTE Band 5**

| Band | BW (MHz) | Mode | RB Allocation | RB offset | Target MPR | Avg Pwr (dBm) | | |
|---|---|---|---|---|---|---|---|---|
| | | | | | | 20450 | 20525 | 20600 |
| | | | | | | 829 MHz | 836.5 MHz | 844 MHz |
| LTE Band 5 | 10 | QPSK | 1 | 0 | 0 | 23.60 | 23.60 | 23.50 |
| | | | 1 | 25 | 0 | 23.50 | 23.60 | 23.50 |
| | | | 1 | 49 | 0 | 23.50 | 23.40 | 23.40 |
| | | | 25 | 0 | 1 | 22.50 | 22.60 | 22.50 |
| | | | 25 | 12 | 1 | 22.50 | 22.60 | 22.50 |
| | | | 25 | 25 | 1 | 22.50 | 22.50 | 22.50 |
| | | | 50 | 0 | 1 | 22.50 | 22.50 | 22.50 |
| | | 16QAM | 1 | 0 | 1 | 22.30 | 22.50 | 22.10 |
| | | | 1 | 25 | 1 | 22.00 | 22.40 | 22.00 |
| | | | 1 | 49 | 1 | 22.20 | 22.30 | 21.80 |
| | | | 25 | 0 | 2 | 21.60 | 21.70 | 21.60 |
| | | | 25 | 12 | 2 | 21.60 | 21.60 | 21.60 |
| | | | 25 | 25 | 2 | 21.60 | 21.50 | 21.60 |
| | | | 50 | 0 | 2 | 21.70 | 21.50 | 21.60 |

| Band | BW (MHz) | Mode | RB Allocation | RB offset | Target MPR | Avg Pwr (dBm) | | |
|---|---|---|---|---|---|---|---|---|
| | | | | | | 20425 | 20525 | 20625 |
| | | | | | | 826.5 MHz | 836.5 MHz | 846.5 MHz |
| LTE Band 5 | 5 | QPSK | 1 | 0 | 0 | 23.60 | 23.60 | 23.50 |
| | | | 1 | 12 | 0 | 23.50 | 23.60 | 23.30 |
| | | | 1 | 24 | 0 | 23.50 | 23.50 | 23.40 |
| | | | 12 | 0 | 1 | 22.40 | 22.50 | 22.50 |
| | | | 12 | 7 | 1 | 22.50 | 22.50 | 22.60 |
| | | | 12 | 13 | 1 | 22.50 | 22.50 | 22.50 |
| | | | 25 | 0 | 1 | 22.40 | 22.40 | 22.50 |
| | | 16QAM | 1 | 0 | 1 | 21.70 | 21.80 | 22.60 |
| | | | 1 | 12 | 1 | 21.80 | 21.80 | 22.60 |
| | | | 1 | 24 | 1 | 21.70 | 21.80 | 22.50 |
| | | | 12 | 0 | 2 | 21.50 | 21.50 | 21.60 |
| | | | 12 | 7 | 2 | 21.60 | 21.50 | 21.60 |
| | | | 12 | 13 | 2 | 21.50 | 21.50 | 21.60 |
| | | | 25 | 0 | 2 | 21.50 | 21.60 | 21.40 |


*This report shall not be reproduced except in full, without the written approval of UL Verification Services Inc.*

| Band | BW (MHz) | Mode | RB Allocation | RB offset | Target MPR | Avg Pwr (dBm) | | |
|---|---|---|---|---|---|---|---|---|
| | | | | | | 20415 | 20525 | 20635 |
| | | | | | | 825.5 MHz | 836.5 MHz | 847.5 MHz |
| LTE Band 5 | 3 | QPSK | 1 | 0 | 0 | 23.50 | 23.50 | 23.50 |
| | | | 1 | 8 | 0 | 23.50 | 23.50 | 23.50 |
| | | | 1 | 14 | 0 | 23.50 | 23.50 | 23.60 |
| | | | 8 | 0 | 1 | 22.50 | 22.50 | 22.40 |
| | | | 8 | 4 | 1 | 22.50 | 22.50 | 22.50 |
| | | | 8 | 7 | 1 | 22.40 | 22.50 | 22.50 |
| | | | 15 | 0 | 1 | 22.50 | 22.50 | 22.40 |
| | | 16QAM | 1 | 0 | 1 | 22.00 | 22.00 | 21.80 |
| | | | 1 | 8 | 1 | 22.00 | 21.90 | 21.80 |
| | | | 1 | 14 | 1 | 22.00 | 22.10 | 21.90 |
| | | | 8 | 0 | 2 | 21.50 | 21.50 | 21.40 |
| | | | 8 | 4 | 2 | 21.50 | 21.60 | 21.50 |
| | | | 8 | 7 | 2 | 21.50 | 21.50 | 21.50 |
| | | | 15 | 0 | 2 | 21.50 | 21.50 | 21.40 |

| Band | BW (MHz) | Mode | RB Allocation | RB offset | Target MPR | Avg Pwr (dBm) | | |
|---|---|---|---|---|---|---|---|---|
| | | | | | | 20407 | 20525 | 20643 |
| | | | | | | 824.7 MHz | 836.5 MHz | 848.3 MHz |
| LTE Band 5 | 1.4 | QPSK | 1 | 0 | 0 | 23.50 | 23.50 | 23.40 |
| | | | 1 | 3 | 0 | 23.50 | 23.50 | 23.50 |
| | | | 1 | 5 | 0 | 23.50 | 23.50 | 23.50 |
| | | | 3 | 0 | 0 | 23.40 | 23.40 | 23.40 |
| | | | 3 | 1 | 0 | 23.50 | 23.50 | 23.40 |
| | | | 3 | 3 | 0 | 23.40 | 23.40 | 23.40 |
| | | | 6 | 0 | 1 | 22.50 | 22.40 | 22.50 |
| | | 16QAM | 1 | 0 | 1 | 21.90 | 21.80 | 21.80 |
| | | | 1 | 3 | 1 | 22.00 | 22.00 | 22.00 |
| | | | 1 | 5 | 1 | 21.90 | 22.00 | 22.00 |
| | | | 3 | 0 | 1 | 22.10 | 22.10 | 22.00 |
| | | | 3 | 1 | 1 | 22.20 | 22.20 | 22.10 |
| | | | 3 | 3 | 1 | 22.10 | 22.10 | 22.10 |
| | | | 6 | 0 | 2 | 21.70 | 21.60 | 21.70 |


*This report shall not be reproduced except in full, without the written approval of UL Verification Services Inc.*

**LTE Band 12**

| Band | BW (MHz) | Mode | RB Allocation | RB offset | Target MPR | Avg Pwr (dBm) | | |
|---|---|---|---|---|---|---|---|---|
| | | | | | | 23060 | 23095 | 23130 |
| | | | | | | 704 MHz | 707.5 MHz | 711 MHz |
| LTE Band 12 | 10 | QPSK | 1 | 0 | 0 | 23.40 | 23.40 | 23.40 |
| | | | 1 | 25 | 0 | 23.40 | 23.30 | 23.30 |
| | | | 1 | 49 | 0 | 23.30 | 23.20 | 23.20 |
| | | | 25 | 0 | 1 | 22.20 | 22.30 | 22.30 |
| | | | 25 | 12 | 1 | 22.20 | 22.20 | 22.30 |
| | | | 25 | 25 | 1 | 22.10 | 22.10 | 22.30 |
| | | | 50 | 0 | 1 | 22.10 | 22.10 | 22.10 |
| | | 16QAM | 1 | 0 | 1 | 22.00 | 22.20 | 22.00 |
| | | | 1 | 25 | 1 | 22.00 | 21.90 | 21.80 |
| | | | 1 | 49 | 1 | 21.80 | 21.90 | 21.80 |
| | | | 25 | 0 | 2 | 21.30 | 21.40 | 21.30 |
| | | | 25 | 12 | 2 | 21.20 | 21.30 | 21.40 |
| | | | 25 | 25 | 2 | 21.20 | 21.20 | 21.30 |
| | | | 50 | 0 | 2 | 21.10 | 21.10 | 21.10 |

| Band | BW (MHz) | Mode | RB Allocation | RB offset | Target MPR | Avg Pwr (dBm) | | |
|---|---|---|---|---|---|---|---|---|
| | | | | | | 23035 | 23095 | 23155 |
| | | | | | | 701.5 MHz | 707.5 MHz | 713.5 MHz |
| LTE Band 12 | 5 | QPSK | 1 | 0 | 0 | 23.30 | 23.40 | 23.30 |
| | | | 1 | 12 | 0 | 23.20 | 23.20 | 23.20 |
| | | | 1 | 24 | 0 | 23.30 | 23.30 | 23.20 |
| | | | 12 | 0 | 1 | 22.20 | 22.20 | 22.20 |
| | | | 12 | 7 | 1 | 22.20 | 22.20 | 22.20 |
| | | | 12 | 13 | 1 | 22.20 | 22.10 | 22.20 |
| | | | 25 | 0 | 1 | 22.10 | 22.10 | 22.10 |
| | | 16QAM | 1 | 0 | 1 | 21.70 | 21.80 | 22.00 |
| | | | 1 | 12 | 1 | 21.80 | 21.80 | 22.20 |
| | | | 1 | 24 | 1 | 21.70 | 21.70 | 22.00 |
| | | | 12 | 0 | 2 | 21.20 | 21.10 | 21.40 |
| | | | 12 | 7 | 2 | 21.20 | 21.10 | 21.30 |
| | | | 12 | 13 | 2 | 21.10 | 21.00 | 21.20 |
| | | | 25 | 0 | 2 | 21.20 | 21.10 | 21.10 |


*This report shall not be reproduced except in full, without the written approval of UL Verification Services Inc.*

| Band | BW (MHz) | Mode | RB Allocation | RB offset | Target MPR | Avg Pwr (dBm) | | |
|---|---|---|---|---|---|---|---|---|
| | | | | | | 23025 | 23095 | 23165 |
| | | | | | | 700.5 MHz | 707.5 MHz | 714.5 MHz |
| LTE Band 12 | 3 | QPSK | 1 | 0 | 0 | 23.30 | 23.40 | 23.40 |
| | | | 1 | 8 | 0 | 23.30 | 23.30 | 23.40 |
| | | | 1 | 14 | 0 | 23.30 | 23.30 | 23.30 |
| | | | 8 | 0 | 1 | 22.20 | 22.20 | 22.20 |
| | | | 8 | 4 | 1 | 22.20 | 22.20 | 22.30 |
| | | | 8 | 7 | 1 | 22.20 | 22.10 | 22.20 |
| | | | 15 | 0 | 1 | 22.20 | 22.10 | 22.20 |
| | | 16QAM | 1 | 0 | 1 | 21.70 | 21.70 | 21.80 |
| | | | 1 | 8 | 1 | 21.70 | 21.70 | 21.70 |
| | | | 1 | 14 | 1 | 21.70 | 21.70 | 21.70 |
| | | | 8 | 0 | 2 | 21.20 | 21.20 | 21.10 |
| | | | 8 | 4 | 2 | 21.20 | 21.10 | 21.20 |
| | | | 8 | 7 | 2 | 21.30 | 21.10 | 21.10 |
| | | | 15 | 0 | 2 | 21.20 | 21.10 | 21.10 |

| Band | BW (MHz) | Mode | RB Allocation | RB offset | Target MPR | Avg Pwr (dBm) | | |
|---|---|---|---|---|---|---|---|---|
| | | | | | | 23017 | 23095 | 23173 |
| | | | | | | 699.7 MHz | 707.5 MHz | 715.3 MHz |
| LTE Band 12 | 1.4 | QPSK | 1 | 0 | 0 | 23.40 | 23.40 | 23.40 |
| | | | 1 | 3 | 0 | 23.40 | 23.40 | 23.40 |
| | | | 1 | 5 | 0 | 23.40 | 23.30 | 23.40 |
| | | | 3 | 0 | 0 | 23.30 | 23.20 | 23.30 |
| | | | 3 | 1 | 0 | 23.30 | 23.30 | 23.30 |
| | | | 3 | 3 | 0 | 23.30 | 23.30 | 23.30 |
| | | | 6 | 0 | 1 | 22.20 | 22.10 | 22.10 |
| | | 16QAM | 1 | 0 | 1 | 22.00 | 21.80 | 21.70 |
| | | | 1 | 3 | 1 | 21.80 | 21.70 | 21.70 |
| | | | 1 | 5 | 1 | 21.70 | 21.70 | 21.70 |
| | | | 3 | 0 | 1 | 21.80 | 21.80 | 21.80 |
| | | | 3 | 1 | 1 | 21.90 | 21.90 | 21.70 |
| | | | 3 | 3 | 1 | 21.80 | 21.80 | 21.70 |
| | | | 6 | 0 | 2 | 21.30 | 21.20 | 21.30 |


*This report shall not be reproduced except in full, without the written approval of UL Verification Services Inc.*

**LTE Band 25**

| Band | BW (MHz) | Mode | RB Allocation | RB offset | Target MPR | Avg Pwr (dBm) | | |
|---|---|---|---|---|---|---|---|---|
| | | | | | | 26140 | 26365 | 26590 |
| | | | | | | 1860 MHz | 1882.5 MHz | 1905 MHz |
| LTE Band 25 | 20 | QPSK | 1 | 0 | 0 | 23.7 | 23.7 | 23.7 |
| | | | 1 | 49 | 0 | 23.7 | 23.6 | 23.6 |
| | | | 1 | 99 | 0 | 23.7 | 23.6 | 23.5 |
| | | | 50 | 0 | 1 | 22.5 | 22.5 | 22.5 |
| | | | 50 | 25 | 1 | 22.5 | 22.5 | 22.5 |
| | | | 50 | 49 | 1 | 22.5 | 22.4 | 22.5 |
| | | | 100 | 0 | 1 | 22.5 | 22.5 | 22.5 |
| | | 16QAM | 1 | 0 | 1 | 22.7 | 22.7 | 22.5 |
| | | | 1 | 49 | 1 | 22.7 | 22.7 | 22.4 |
| | | | 1 | 99 | 1 | 22.7 | 22.7 | 22.3 |
| | | | 50 | 0 | 2 | 21.7 | 21.5 | 21.5 |
| | | | 50 | 25 | 2 | 21.6 | 21.5 | 21.5 |
| | | | 50 | 49 | 2 | 21.7 | 21.5 | 21.5 |
| | | | 100 | 0 | 2 | 21.7 | 21.5 | 21.5 |

| Band | BW (MHz) | Mode | RB Allocation | RB offset | Target MPR | Avg Pwr (dBm) | | |
|---|---|---|---|---|---|---|---|---|
| | | | | | | 26115 | 26365 | 26615 |
| | | | | | | 1857.5 MHz | 1882.5 MHz | 1907.5 MHz |
| LTE Band 25 | 15 | QPSK | 1 | 0 | 0 | 23.70 | 23.50 | 23.70 |
| | | | 1 | 37 | 0 | 23.70 | 23.50 | 23.70 |
| | | | 1 | 74 | 0 | 23.60 | 23.50 | 23.70 |
| | | | 36 | 0 | 1 | 22.50 | 22.40 | 22.50 |
| | | | 36 | 18 | 1 | 22.50 | 22.50 | 22.50 |
| | | | 36 | 35 | 1 | 22.50 | 22.40 | 22.50 |
| | | | 75 | 0 | 1 | 22.50 | 22.40 | 22.60 |
| | | 16QAM | 1 | 0 | 1 | 22.20 | 22.20 | 22.20 |
| | | | 1 | 37 | 1 | 22.10 | 22.00 | 22.20 |
| | | | 1 | 74 | 1 | 22.10 | 22.10 | 22.10 |
| | | | 36 | 0 | 2 | 21.60 | 21.50 | 21.50 |
| | | | 36 | 18 | 2 | 21.50 | 21.50 | 21.50 |
| | | | 36 | 35 | 2 | 21.50 | 21.40 | 21.60 |
| | | | 75 | 0 | 2 | 21.60 | 21.40 | 21.60 |


*This report shall not be reproduced except in full, without the written approval of UL Verification Services Inc.*

| Band | BW (MHz) | Mode | RB Allocation | RB offset | Target MPR | Avg Pwr (dBm) | | |
|---|---|---|---|---|---|---|---|---|
| | | | | | | 26090 | 26365 | 26640 |
| | | | | | | 1855 MHz | 1882.5 MHz | 1910 MHz |
| LTE Band 25 | 10 | QPSK | 1 | 0 | 0 | 23.70 | 23.70 | 23.70 |
| | | | 1 | 24 | 0 | 23.70 | 23.70 | 23.70 |
| | | | 1 | 49 | 0 | 23.70 | 23.70 | 23.70 |
| | | | 25 | 0 | 1 | 22.70 | 22.70 | 22.70 |
| | | | 25 | 12 | 1 | 22.70 | 22.70 | 22.70 |
| | | | 25 | 24 | 1 | 22.70 | 22.70 | 22.70 |
| | | | 50 | 0 | 1 | 22.70 | 22.70 | 22.70 |
| | | 16QAM | 1 | 0 | 1 | 22.50 | 22.50 | 22.30 |
| | | | 1 | 24 | 1 | 22.40 | 22.30 | 22.60 |
| | | | 1 | 49 | 1 | 22.30 | 22.30 | 22.20 |
| | | | 25 | 0 | 2 | 21.70 | 21.70 | 21.70 |
| | | | 25 | 12 | 2 | 21.70 | 21.70 | 21.70 |
| | | | 25 | 24 | 2 | 21.70 | 21.70 | 21.70 |
| | | | 50 | 0 | 2 | 21.70 | 21.70 | 21.70 |

| Band | BW (MHz) | Mode | RB Allocation | RB offset | Target MPR | Avg Pwr (dBm) | | |
|---|---|---|---|---|---|---|---|---|
| | | | | | | 26065 | 26365 | 26665 |
| | | | | | | 1852.5 MHz | 1882.5 MHz | 1912.5 MHz |
| LTE Band 25 | 5 | QPSK | 1 | 0 | 0 | 23.70 | 23.70 | 23.70 |
| | | | 1 | 12 | 0 | 23.70 | 23.70 | 23.70 |
| | | | 1 | 24 | 0 | 23.70 | 23.70 | 23.70 |
| | | | 12 | 0 | 1 | 22.70 | 22.60 | 22.70 |
| | | | 12 | 6 | 1 | 22.70 | 22.60 | 22.70 |
| | | | 12 | 11 | 1 | 22.70 | 22.70 | 22.60 |
| | | | 25 | 0 | 1 | 22.60 | 22.70 | 22.70 |
| | | 16QAM | 1 | 0 | 1 | 22.10 | 22.10 | 22.70 |
| | | | 1 | 12 | 1 | 22.10 | 22.20 | 22.70 |
| | | | 1 | 24 | 1 | 22.10 | 22.20 | 22.70 |
| | | | 12 | 0 | 2 | 21.70 | 21.60 | 21.70 |
| | | | 12 | 6 | 2 | 21.60 | 21.60 | 21.70 |
| | | | 12 | 11 | 2 | 21.70 | 21.60 | 21.70 |
| | | | 25 | 0 | 2 | 21.70 | 21.70 | 21.70 |


*This report shall not be reproduced except in full, without the written approval of UL Verification Services Inc.*

| Band | BW (MHz) | Mode | RB Allocation | RB offset | Target MPR | Avg Pwr (dBm) | | |
|---|---|---|---|---|---|---|---|---|
| | | | | | | 26055 | 26365 | 26675 |
| | | | | | | 1851.5 MHz | 1882.5 MHz | 1913.5 MHz |
| LTE Band 25 | 3 | QPSK | 1 | 0 | 0 | 23.70 | 23.70 | 23.70 |
| | | | 1 | 7 | 0 | 23.70 | 23.70 | 23.70 |
| | | | 1 | 14 | 0 | 23.70 | 23.70 | 23.70 |
| | | | 6 | 0 | 1 | 22.60 | 22.60 | 22.60 |
| | | | 6 | 3 | 1 | 22.70 | 22.60 | 22.60 |
| | | | 6 | 5 | 1 | 22.60 | 22.70 | 22.60 |
| | | | 15 | 0 | 1 | 22.60 | 22.70 | 22.60 |
| | | 16QAM | 1 | 0 | 1 | 22.30 | 22.20 | 22.30 |
| | | | 1 | 7 | 1 | 22.30 | 22.40 | 22.20 |
| | | | 1 | 14 | 1 | 22.30 | 22.30 | 22.10 |
| | | | 6 | 0 | 2 | 21.70 | 21.70 | 21.70 |
| | | | 6 | 3 | 2 | 21.70 | 21.70 | 21.70 |
| | | | 6 | 5 | 2 | 21.70 | 21.70 | 21.70 |
| | | | 15 | 0 | 2 | 21.70 | 21.70 | 21.70 |

| Band | BW (MHz) | Mode | RB Allocation | RB offset | Target MPR | Avg Pwr (dBm) | | |
|---|---|---|---|---|---|---|---|---|
| | | | | | | 26047 | 26365 | 26683 |
| | | | | | | 1850.7 MHz | 1882.5 MHz | 1914.3 MHz |
| LTE Band 25 | 1.4 | QPSK | 1 | 0 | 0 | 23.70 | 23.70 | 23.70 |
| | | | 1 | 2 | 0 | 23.70 | 23.70 | 23.70 |
| | | | 1 | 5 | 0 | 23.70 | 23.70 | 23.70 |
| | | | 3 | 0 | 0 | 23.60 | 23.60 | 23.60 |
| | | | 3 | 1 | 0 | 23.70 | 23.60 | 23.70 |
| | | | 3 | 2 | 0 | 23.70 | 23.70 | 23.70 |
| | | | 6 | 0 | 1 | 22.60 | 22.50 | 22.60 |
| | | 16QAM | 1 | 0 | 1 | 22.20 | 22.10 | 22.10 |
| | | | 1 | 2 | 1 | 22.20 | 22.20 | 22.30 |
| | | | 1 | 5 | 1 | 22.20 | 22.30 | 22.10 |
| | | | 3 | 0 | 1 | 22.30 | 22.30 | 22.30 |
| | | | 3 | 1 | 1 | 22.50 | 22.40 | 22.40 |
| | | | 3 | 2 | 1 | 22.40 | 22.50 | 22.30 |
| | | | 6 | 0 | 2 | 21.70 | 21.70 | 21.70 |


*This report shall not be reproduced except in full, without the written approval of UL Verification Services Inc.*

**LTE Band 26**

| Band | BW (MHz) | Mode | RB Allocation | RB offset | Target MPR | Avg Pwr (dBm) | | |
|---|---|---|---|---|---|---|---|---|
| | | | | | | 26765 | 26865 | 26965 |
| | | | | | | 831.5 MHz | 836.5 MHz | 841.5 MHz |
| LTE Band 26 | 15 | QPSK | 1 | 0 | 0 | 23.60 | 23.60 | 23.60 |
| | | | 1 | 37 | 0 | 23.30 | 23.40 | 23.60 |
| | | | 1 | 74 | 0 | 23.40 | 23.40 | 23.50 |
| | | | 36 | 0 | 1 | 22.50 | 22.60 | 22.50 |
| | | | 36 | 20 | 1 | 22.50 | 22.50 | 22.50 |
| | | | 36 | 39 | 1 | 22.40 | 22.40 | 22.50 |
| | | | 75 | 0 | 1 | 22.40 | 22.40 | 22.40 |
| | | 16QAM | 1 | 0 | 1 | 22.10 | 22.10 | 22.10 |
| | | | 1 | 37 | 1 | 22.00 | 22.10 | 22.10 |
| | | | 1 | 74 | 1 | 21.90 | 22.00 | 22.00 |
| | | | 36 | 0 | 2 | 21.50 | 21.60 | 21.50 |
| | | | 36 | 20 | 2 | 21.50 | 21.60 | 21.50 |
| | | | 36 | 39 | 2 | 21.50 | 21.50 | 21.50 |
| | | | 75 | 0 | 2 | 21.40 | 21.40 | 21.40 |

| Band | BW (MHz) | Mode | RB Allocation | RB offset | Target MPR | Avg Pwr (dBm) | | |
|---|---|---|---|---|---|---|---|---|
| | | | | | | 26740 | 26865 | 26990 |
| | | | | | | 819 MHz | 831.5 MHz | 844 MHz |
| LTE Band 26 | 10 | QPSK | 1 | 0 | 0 | 23.60 | 23.60 | 23.60 |
| | | | 1 | 25 | 0 | 23.60 | 23.60 | 23.60 |
| | | | 1 | 49 | 0 | 23.60 | 23.50 | 23.50 |
| | | | 25 | 0 | 1 | 22.50 | 22.60 | 22.50 |
| | | | 25 | 12 | 1 | 22.50 | 22.60 | 22.60 |
| | | | 25 | 25 | 1 | 22.50 | 22.50 | 22.60 |
| | | | 50 | 0 | 1 | 22.50 | 22.40 | 22.50 |
| | | 16QAM | 1 | 0 | 1 | 22.30 | 22.30 | 21.90 |
| | | | 1 | 25 | 1 | 22.00 | 22.10 | 21.90 |
| | | | 1 | 49 | 1 | 22.20 | 22.10 | 21.90 |
| | | | 25 | 0 | 2 | 21.70 | 21.70 | 21.70 |
| | | | 25 | 12 | 2 | 21.70 | 21.70 | 21.70 |
| | | | 25 | 25 | 2 | 21.70 | 21.60 | 21.70 |
| | | | 50 | 0 | 2 | 21.60 | 21.60 | 21.70 |


*This report shall not be reproduced except in full, without the written approval of UL Verification Services Inc.*

| Band | BW (MHz) | Mode | RB Allocation | RB offset | Target MPR | Avg Pwr (dBm) | | |
|---|---|---|---|---|---|---|---|---|
| | | | | | | 26715 | 26865 | 27015 |
| | | | | | | 816.5 MHz | 831.5 MHz | 846.5 MHz |
| LTE Band 26 | 5 | QPSK | 1 | 0 | 0 | 23.60 | 23.60 | 23.50 |
| | | | 1 | 12 | 0 | 23.60 | 23.50 | 23.40 |
| | | | 1 | 24 | 0 | 23.60 | 23.50 | 23.40 |
| | | | 12 | 0 | 1 | 22.60 | 22.50 | 22.60 |
| | | | 12 | 7 | 1 | 22.60 | 22.60 | 22.60 |
| | | | 12 | 13 | 1 | 22.50 | 22.40 | 22.60 |
| | | | 25 | 0 | 1 | 22.60 | 22.60 | 22.60 |
| | | 16QAM | 1 | 0 | 1 | 21.80 | 21.80 | 22.30 |
| | | | 1 | 12 | 1 | 21.80 | 21.80 | 22.30 |
| | | | 1 | 24 | 1 | 21.90 | 21.70 | 22.40 |
| | | | 12 | 0 | 2 | 21.60 | 21.60 | 21.70 |
| | | | 12 | 7 | 2 | 21.60 | 21.60 | 21.70 |
| | | | 12 | 13 | 2 | 21.60 | 21.50 | 21.70 |
| | | | 25 | 0 | 2 | 21.70 | 21.70 | 21.60 |

| Band | BW (MHz) | Mode | RB Allocation | RB offset | Target MPR | Avg Pwr (dBm) | | |
|---|---|---|---|---|---|---|---|---|
| | | | | | | 26705 | 26865 | 27025 |
| | | | | | | 815.5 MHz | 831.5 MHz | 847.5 MHz |
| LTE Band 26 | 3 | QPSK | 1 | 0 | 0 | 23.50 | 23.50 | 23.60 |
| | | | 1 | 8 | 0 | 23.60 | 23.50 | 23.30 |
| | | | 1 | 14 | 0 | 23.50 | 23.40 | 23.60 |
| | | | 8 | 0 | 1 | 22.50 | 22.50 | 22.50 |
| | | | 8 | 4 | 1 | 22.50 | 22.50 | 22.50 |
| | | | 8 | 7 | 1 | 22.40 | 22.40 | 22.50 |
| | | | 15 | 0 | 1 | 22.50 | 22.50 | 22.50 |
| | | 16QAM | 1 | 0 | 1 | 22.10 | 22.10 | 21.90 |
| | | | 1 | 8 | 1 | 22.20 | 22.20 | 21.80 |
| | | | 1 | 14 | 1 | 22.10 | 22.00 | 21.90 |
| | | | 8 | 0 | 2 | 21.60 | 21.50 | 21.40 |
| | | | 8 | 4 | 2 | 21.60 | 21.50 | 21.50 |
| | | | 8 | 7 | 2 | 21.50 | 21.40 | 21.50 |
| | | | 15 | 0 | 2 | 21.50 | 21.50 | 21.40 |


*This report shall not be reproduced except in full, without the written approval of UL Verification Services Inc.*

| Band | BW (MHz) | Mode | RB Allocation | RB offset | Target MPR | Avg Pwr (dBm) | | |
|---|---|---|---|---|---|---|---|---|
| | | | | | | 26697 | 26865 | 27033 |
| | | | | | | 814.7 MHz | 831.5 MHz | 848.3 MHz |
| LTE Band 26 | 1.4 | QPSK | 1 | 0 | 0 | 23.60 | 23.60 | 23.60 |
| | | | 1 | 3 | 0 | 23.60 | 23.60 | 23.60 |
| | | | 1 | 5 | 0 | 23.60 | 23.60 | 23.60 |
| | | | 3 | 0 | 0 | 23.50 | 23.50 | 23.60 |
| | | | 3 | 1 | 0 | 23.50 | 23.50 | 23.60 |
| | | | 3 | 3 | 0 | 23.40 | 23.60 | 23.60 |
| | | | 6 | 0 | 1 | 22.40 | 22.40 | 22.30 |
| | | 16QAM | 1 | 0 | 1 | 22.00 | 22.00 | 21.90 |
| | | | 1 | 3 | 1 | 22.20 | 22.20 | 22.10 |
| | | | 1 | 5 | 1 | 21.90 | 21.90 | 22.00 |
| | | | 3 | 0 | 1 | 22.10 | 22.10 | 22.10 |
| | | | 3 | 1 | 1 | 22.30 | 22.30 | 22.10 |
| | | | 3 | 3 | 1 | 22.20 | 22.20 | 22.20 |
| | | | 6 | 0 | 2 | 21.60 | 21.60 | 21.50 |


*This report shall not be reproduced except in full, without the written approval of UL Verification Services Inc.*

**LTE Band 41**

| Band | BW (MHz) | Mode | RB Allocation | RB offset | Target MPR | Avg Pwr (dBm) | | |
|---|---|---|---|---|---|---|---|---|
| | | | | | | 39750 | 40620 | 41490 |
| | | | | | | 2506 MHz | 2593 MHz | 2680 MHz |
| LTE Band 41 | 20 | QPSK | 1 | 0 | 0 | 23.30 | 23.70 | 23.70 |
| | | | 1 | 49 | 0 | 23.40 | 23.60 | 23.60 |
| | | | 1 | 99 | 0 | 23.40 | 23.50 | 23.50 |
| | | | 50 | 0 | 1 | 22.20 | 22.50 | 22.50 |
| | | | 50 | 24 | 1 | 22.20 | 22.50 | 22.50 |
| | | | 50 | 50 | 1 | 22.20 | 22.50 | 22.50 |
| | | | 100 | 0 | 1 | 22.20 | 22.50 | 22.50 |
| | | 16QAM | 1 | 0 | 1 | 22.00 | 22.50 | 22.50 |
| | | | 1 | 49 | 1 | 22.00 | 22.50 | 22.40 |
| | | | 1 | 99 | 1 | 21.90 | 22.50 | 22.30 |
| | | | 50 | 0 | 2 | 21.20 | 21.50 | 21.60 |
| | | | 50 | 24 | 2 | 21.10 | 21.50 | 21.50 |
| | | | 50 | 50 | 2 | 21.20 | 21.50 | 21.60 |
| | | | 100 | 0 | 2 | 21.20 | 21.50 | 21.50 |

| Band | BW (MHz) | Mode | RB Allocation | RB offset | Target MPR | Avg Pwr (dBm) | | |
|---|---|---|---|---|---|---|---|---|
| | | | | | | 39725 | 40620 | 41515 |
| | | | | | | 2503.5 MHz | 2593 MHz | 2682.5 MHz |
| LTE Band 41 | 15 | QPSK | 1 | 0 | 0 | 23.30 | 23.60 | 23.60 |
| | | | 1 | 37 | 0 | 23.10 | 23.30 | 23.30 |
| | | | 1 | 74 | 0 | 23.30 | 23.60 | 23.50 |
| | | | 36 | 0 | 1 | 22.20 | 22.50 | 22.50 |
| | | | 36 | 20 | 1 | 22.20 | 22.50 | 22.60 |
| | | | 36 | 39 | 1 | 22.20 | 22.50 | 22.60 |
| | | | 75 | 0 | 1 | 22.20 | 22.50 | 22.50 |
| | | 16QAM | 1 | 0 | 1 | 22.00 | 22.40 | 22.60 |
| | | | 1 | 37 | 1 | 22.10 | 22.20 | 22.50 |
| | | | 1 | 74 | 1 | 21.80 | 22.30 | 22.40 |
| | | | 36 | 0 | 2 | 21.20 | 21.50 | 21.50 |
| | | | 36 | 20 | 2 | 21.20 | 21.50 | 21.70 |
| | | | 36 | 39 | 2 | 21.10 | 21.50 | 21.50 |
| | | | 75 | 0 | 2 | 21.20 | 21.50 | 21.50 |


*This report shall not be reproduced except in full, without the written approval of UL Verification Services Inc.*

| Band | BW (MHz) | Mode | RB Allocation | RB offset | Target MPR | Avg Pwr (dBm) | | |
|---|---|---|---|---|---|---|---|---|
| | | | | | | 39700 | 40620 | 41540 |
| | | | | | | 2501 MHz | 2593 MHz | 2685 MHz |
| LTE Band 41 | 10 | QPSK | 1 | 0 | 0 | 23.40 | 23.60 | 23.70 |
| | | | 1 | 25 | 0 | 23.60 | 23.50 | 23.70 |
| | | | 1 | 49 | 0 | 23.60 | 23.60 | 23.70 |
| | | | 25 | 0 | 1 | 22.30 | 22.50 | 22.40 |
| | | | 25 | 12 | 1 | 22.40 | 22.50 | 22.60 |
| | | | 25 | 25 | 1 | 22.40 | 22.50 | 22.50 |
| | | | 50 | 0 | 1 | 22.30 | 22.40 | 22.50 |
| | | 16QAM | 1 | 0 | 1 | 22.40 | 22.30 | 22.50 |
| | | | 1 | 25 | 1 | 22.20 | 22.20 | 22.50 |
| | | | 1 | 49 | 1 | 22.20 | 22.30 | 22.50 |
| | | | 25 | 0 | 2 | 21.30 | 21.50 | 21.50 |
| | | | 25 | 12 | 2 | 21.30 | 21.50 | 21.60 |
| | | | 25 | 25 | 2 | 21.30 | 21.50 | 21.50 |
| | | | 50 | 0 | 2 | 21.30 | 21.50 | 21.60 |

| Band | BW (MHz) | Mode | RB Allocation | RB offset | Target MPR | Avg Pwr (dBm) | | |
|---|---|---|---|---|---|---|---|---|
| | | | | | | 39675 | 40620 | 41565 |
| | | | | | | 2498.5 MHz | 2593 MHz | 2687.5 MHz |
| LTE Band 41 | 5 | QPSK | 1 | 0 | 0 | 23.60 | 23.70 | 23.70 |
| | | | 1 | 12 | 0 | 23.50 | 23.50 | 23.50 |
| | | | 1 | 24 | 0 | 23.70 | 23.60 | 23.70 |
| | | | 12 | 0 | 1 | 22.30 | 22.50 | 22.40 |
| | | | 12 | 7 | 1 | 22.30 | 22.40 | 22.50 |
| | | | 12 | 13 | 1 | 22.30 | 22.40 | 22.50 |
| | | | 25 | 0 | 1 | 22.60 | 22.40 | 22.40 |
| | | 16QAM | 1 | 0 | 1 | 22.60 | 22.30 | 22.20 |
| | | | 1 | 12 | 1 | 22.50 | 22.30 | 22.20 |
| | | | 1 | 24 | 1 | 22.60 | 22.50 | 22.20 |
| | | | 12 | 0 | 2 | 21.30 | 21.50 | 21.50 |
| | | | 12 | 7 | 2 | 21.50 | 21.50 | 21.50 |
| | | | 12 | 13 | 2 | 21.50 | 21.50 | 21.50 |
| | | | 25 | 0 | 2 | 21.40 | 21.50 | 21.50 |


*This report shall not be reproduced except in full, without the written approval of UL Verification Services Inc.*

# 9. RADIATED TEST RESULTS

## 9.1. RADIATED POWER (ERP & EIRP)

**RULE PART(S)**

FCC: §2.1046, §22.913, §24.232, §27 and § 90.635.

**LIMITS**

22.913(a) - The ERP of mobile transmitters and auxiliary test transmitters must not exceed 7 Watts.

24.232(c) - Mobile/portable stations are limited to 2 watts e.i.r.p. peak power and the equipment must employ means to limit the power to the minimum necessary for successful communications.

27.50(c) - (10) Portable stations (hand-held devices) are limited to 3 watts ERP; (LTE B12)

27.50(d) - (4) Fixed, mobile, and portable (hand-held) stations operating in the 1710-1755 MHz band and mobile and portable stations operating in the 1695-1710 MHz and 1755-1780 MHz bands are limited to 1 watt EIRP.(Band 4)

27.50(h) - (2) Mobile stations are limited to 2.0 watts EIRP. All user stations are limited to 2.0 watts transmitter output power. (LTE B41 & 7)

90.635(b) - The maximum output power of the transmitter for mobile stations is 100 watts (20 dBw). (LTE B26)

In addition, when the transmitter power is measured in terms of average value, the peak-to-average ratio of the power shall not exceed 13dB.

**TEST PROCEDURE**

ANSI / TIA / EIA 603C Clause 2.2.17; PSA setting reference to 971168 D01 v02r02
For peak power measurement with a PSA:
a) Set the RBW ≥ OBW; b) Set VBW ≥ 3 × RBW; c) Set span ≥ 2 x RBW; d) Sweep time = auto couple; e) Detector = peak; f) Ensure that the number of measurement points ≥ span/RBW; g) Trace mode = max hold;
For average power measurement with a PSA:
a) Set span to at least 1.5 times the OBW; b) Set RBW = 1-5% of the OBW, not to exceed 1 MHz; c) Set VBW ≥ 3 x RBW; d) Set number of points in sweep ≥ 2 × span / RBW; e) Sweep time = auto-couple; f) Detector = RMS (power averaging); g) Use free run trigger If burst duty cycle ≥ 98; h) Use trigger to capture bursts If burst duty cycle < 98; i) Trace average at least 100 traces in power averaging (*i.e.*, RMS) mode. j) Compute the power by integrating the spectrum across the OBW of the signal using the instrument's band power measurement function.

**MODES TESTED**

GSM, CDMA, WCDMA, and LTE

**TEST RESULTS**


*This report shall not be reproduced except in full, without the written approval of UL Verification Services Inc.*

### 9.1.1. ERP/EIRP RESULTS

**GSM**

| Band | Mode | Channel | f(MHz) | ERP / EIRP | |
|---|---|---|---|---|---|
| | | | | dBm | mW |
| GSM1900 | GPRS | 512 | 1850.2 | 30.4 | 1096.48 |
| | | 661 | 1880 | 30.6 | 1148.15 |
| | | 810 | 1909.8 | 30.8 | 1202.26 |
| | EGPRS | 512 | 1850.2 | 28.4 | 691.83 |
| | | 661 | 1880 | 28.9 | 776.25 |
| | | 810 | 1909.8 | 28.7 | 741.31 |
| GSM850 | GPRS | 128 | 824.2 | 30.126 | 1029.44 |
| | | 190 | 836.6 | 30.244 | 1057.79 |
| | | 251 | 848.8 | 29.605 | 913.06 |
| | EGPRS | 128 | 824.2 | 24.747 | 298.33 |
| | | 190 | 836.6 | 24.629 | 290.34 |
| | | 251 | 848.8 | 23.114 | 204.83 |

**WCDMA**

| Band | Mode | Channel | f(MHz) | ERP / EIRP | |
|---|---|---|---|---|---|
| | | | | dBm | mW |
| Band 2 | REL99 | 9262 | 1852.4 | 24.3 | 269.15 |
| | | 9400 | 1880 | 25.1 | 323.59 |
| | | 9538 | 1907.6 | 24.7 | 295.12 |
| | HSDPA | 9262 | 1852.4 | 24.0 | 251.19 |
| | | 9400 | 1880 | 24.7 | 295.12 |
| | | 9538 | 1907.6 | 24.1 | 257.04 |
| Band 5 | REL99 | 4132 | 826.4 | 21.89 | 154.56 |
| | | 4183 | 836.6 | 20.43 | 110.43 |
| | | 4233 | 846.6 | 20.93 | 123.91 |
| | HSDPA | 4132 | 826.4 | 21.58 | 143.91 |
| | | 4183 | 836.6 | 20.20 | 104.74 |
| | | 4233 | 846.6 | 20.89 | 122.77 |


*This report shall not be reproduced except in full, without the written approval of UL Verification Services Inc.*

## CDMA

| Band | Mode | Channel | f(MHz) | ERP / EIRP | |
|---|---|---|---|---|---|
| | | | | dBm | mW |
| BC1 | 1xRTT | 25 | 1851.25 | 25.75 | 375.84 |
| | | 600 | 1880 | 26.45 | 441.57 |
| | | 1175 | 1908.75 | 26.75 | 473.15 |
| | EVDO REL. 0 | 25 | 1851.25 | 25.55 | 358.92 |
| | | 600 | 1880 | 26.25 | 421.70 |
| | | 1175 | 1908.75 | 26.65 | 462.38 |

| Band | Mode | Channel | f(MHz) | ERP / EIRP | |
|---|---|---|---|---|---|
| | | | | dBm | mW |
| BC0 | 1xRTT | 1013 | 824.7 | 21.96 | 157.07 |
| | | 384 | 836.52 | 21.11 | 129.15 |
| | | 777 | 848.31 | 21.11 | 129.15 |
| | EVDO REL. 0 | 1013 | 824.7 | 21.69 | 147.57 |
| | | 384 | 836.52 | 21.11 | 129.12 |
| | | 777 | 848.31 | 20.95 | 124.45 |

| Band | Mode | Channel | f(MHz) | ERP / EIRP | |
|---|---|---|---|---|---|
| | | | | dBm | mW |
| BC10 | 1xRTT | 476 | 817.9 | 21.55 | 142.92 |
| | | 580 | 820.5 | 21.53 | 142.27 |
| | | 684 | 823.1 | 21.54 | 142.59 |
| | EVDO REL. 0 | 476 | 817.9 | 21.47 | 140.28 |
| | | 580 | 820.5 | 21.58 | 143.88 |
| | | 684 | 823.1 | 21.64 | 145.88 |


UL VERFICATION SERVICES FORM ID: FCC_22_24_27_90
47173 BENICIA STREET, FREMONT, CA 94538, USA TEL: (510) 771-1000 FAX: (510) 661-0888
*This report shall not be reproduced except in full, without the written approval of UL Verification Services Inc.*

### 9.1.2. LTE ERP/EIRP RESULTS

**LTE Band 2**

| Band | BW (MHz) | Mode | RB/RB Size | f (MHz) | ERP / EIRP | |
|---|---|---|---|---|---|---|
| | | | | | dBm | mW |
| LTE2 | 20 | QPSK | 1/0 | 1860 | 25.07 | 321.37 |
| | | | 1/0 | 1880 | 25.10 | 323.59 |
| | | | 1/0 | 1900 | 25.40 | 346.74 |
| | | 16QAM | 1/0 | 1860 | 24.40 | 275.42 |
| | | | 1/0 | 1880 | 24.50 | 281.84 |
| | | | 1/0 | 1900 | 24.78 | 300.61 |
| | 15 | QPSK | 1/0 | 1857.5 | 24.80 | 302.00 |
| | | | 1/0 | 1880 | 24.90 | 309.03 |
| | | | 1/0 | 1902.5 | 25.30 | 338.84 |
| | | 16QAM | 1/0 | 1857.5 | 24.15 | 260.02 |
| | | | 1/0 | 1880 | 24.40 | 275.42 |
| | | | 1/0 | 1902.5 | 24.70 | 295.12 |
| | 10 | QPSK | 1/0 | 1855 | 24.72 | 296.48 |
| | | | 1/0 | 1880 | 25.30 | 338.84 |
| | | | 1/0 | 1905 | 25.10 | 323.59 |
| | | 16QAM | 1/0 | 1855 | 24.00 | 251.19 |
| | | | 1/0 | 1880 | 24.70 | 295.12 |
| | | | 1/0 | 1905 | 24.40 | 275.42 |
| | 5 | QPSK | 1/0 | 1852.5 | 24.60 | 288.40 |
| | | | 1/0 | 1880 | 25.50 | 354.81 |
| | | | 1/0 | 1907.5 | 25.10 | 323.59 |
| | | 16QAM | 1/0 | 1852.5 | 23.90 | 245.47 |
| | | | 1/0 | 1880 | 24.80 | 302.00 |
| | | | 1/0 | 1907.5 | 24.40 | 275.42 |


*This report shall not be reproduced except in full, without the written approval of UL Verification Services Inc.*

| Band | BW (MHz) | Mode | RB/RB Size | f (MHz) | ERP / EIRP | |
|---|---|---|---|---|---|---|
| | | | | | dBm | mW |
| LTE2 | 3 | QPSK | 1/0 | 1851.5 | 24.70 | 295.12 |
| | | | 1/0 | 1880 | 25.69 | 370.68 |
| | | | 1/0 | 1908.5 | 25.20 | 331.13 |
| | | 16QAM | 1/0 | 1851.5 | 24.15 | 260.02 |
| | | | 1/0 | 1880 | 25.08 | 322.11 |
| | | | 1/0 | 1908.5 | 24.50 | 281.84 |
| | 1.4 | QPSK | 1/0 | 1850.7 | 24.68 | 293.43 |
| | | | 1/0 | 1880 | 25.28 | 337.29 |
| | | | 1/0 | 1909.3 | 25.87 | 386.01 |
| | | 16QAM | 1/0 | 1850.7 | 23.70 | 234.42 |
| | | | 1/0 | 1880 | 24.50 | 281.84 |
| | | | 1/0 | 1909.3 | 25.10 | 323.59 |


*This report shall not be reproduced except in full, without the written approval of UL Verification Services Inc.*

**LTE Band 4**

| Band | BW (MHz) | Mode | RB/RB Size | f (MHz) | ERP / EIRP | |
|---|---|---|---|---|---|---|
| | | | | | dBm | mW |
| LTE4 | 20 | QPSK | 1/0 | 1720 | 22.12 | 162.81 |
| | | | 1/0 | 1732.5 | 21.47 | 140.32 |
| | | | 1/0 | 1745 | 21.83 | 152.24 |
| | | 16QAM | 1/0 | 1720 | 21.42 | 138.57 |
| | | | 1/0 | 1732.5 | 20.77 | 119.43 |
| | | | 1/0 | 1745 | 21.13 | 129.58 |
| | 15 | QPSK | 1/0 | 1717.5 | 22.23 | 166.95 |
| | | | 1/0 | 1732.5 | 20.67 | 116.71 |
| | | | 1/0 | 1747.5 | 21.02 | 126.36 |
| | | 16QAM | 1/0 | 1717.5 | 21.53 | 142.10 |
| | | | 1/0 | 1732.5 | 20.07 | 101.65 |
| | | | 1/0 | 1747.5 | 20.32 | 107.55 |
| | 10 | QPSK | 1/0 | 1715 | 22.14 | 163.50 |
| | | | 1/0 | 1732.5 | 20.57 | 114.05 |
| | | | 1/0 | 1750 | 21.11 | 129.03 |
| | | 16QAM | 1/0 | 1715 | 21.44 | 139.16 |
| | | | 1/0 | 1732.5 | 19.97 | 99.34 |
| | | | 1/0 | 1750 | 20.41 | 109.82 |
| | 5 | QPSK | 1/0 | 1712.5 | 22.24 | 167.66 |
| | | | 1/0 | 1732.5 | 20.77 | 119.43 |
| | | | 1/0 | 1752.5 | 21.10 | 128.76 |
| | | 16QAM | 1/0 | 1712.5 | 21.54 | 142.70 |
| | | | 1/0 | 1732.5 | 20.07 | 101.65 |
| | | | 1/0 | 1752.5 | 20.50 | 112.15 |


UL VERFICATION SERVICES FORM ID: FCC_22_24_27_90
47173 BENICIA STREET, FREMONT, CA 94538, USA TEL: (510) 771-1000 FAX: (510) 661-0888
*This report shall not be reproduced except in full, without the written approval of UL Verification Services Inc.*

| Band | BW (MHz) | Mode | RB/RB Size | f (MHz) | ERP / EIRP | |
|---|---|---|---|---|---|---|
| | | | | | dBm | mW |
| LTE4 | 3 | QPSK | 1/0 | 1711.5 | 22.25 | 167.80 |
| | | | 1/0 | 1732.5 | 21.67 | 146.93 |
| | | | 1/0 | 1753.5 | 20.99 | 125.72 |
| | | 16QAM | 1/0 | 1711.5 | 21.55 | 142.82 |
| | | | 1/0 | 1732.5 | 21.07 | 127.97 |
| | | | 1/0 | 1753.5 | 20.29 | 107.01 |
| | 1.4 | QPSK | 1/0 | 1710.7 | 22.30 | 169.86 |
| | | | 1/0 | 1732.5 | 22.02 | 159.19 |
| | | | 1/0 | 1754.3 | 21.79 | 151.05 |
| | | 16QAM | 1/0 | 1710.7 | 21.45 | 139.66 |
| | | | 1/0 | 1732.5 | 21.07 | 127.97 |
| | | | 1/0 | 1754.3 | 20.99 | 125.64 |


*This report shall not be reproduced except in full, without the written approval of UL Verification Services Inc.*

**LTE Band 5**

| Band | BW (MHz) | Mode | RB/RB Size | f (MHz) | ERP / EIRP | |
|---|---|---|---|---|---|---|
| | | | | | dBm | mW |
| LTE5 | 10 | QPSK | 1/0 | 829 | 20.55 | 113.50 |
| | | | 1/0 | 836.5 | 20.24 | 105.68 |
| | | | 1/0 | 844 | 20.16 | 103.75 |
| | | 16QAM | 1/0 | 829 | 19.30 | 85.11 |
| | | | 1/0 | 836.5 | 20.01 | 100.23 |
| | | | 1/0 | 844 | 19.44 | 87.90 |
| | 5 | QPSK | 1/0 | 826.5 | 20.45 | 110.92 |
| | | | 1/0 | 836.5 | 20.21 | 104.95 |
| | | | 1/0 | 846.5 | 19.83 | 96.16 |
| | | 16QAM | 1/0 | 826.5 | 19.62 | 91.62 |
| | | | 1/0 | 836.5 | 19.13 | 81.85 |
| | | | 1/0 | 846.5 | 19.31 | 85.31 |
| | 3 | QPSK | 1/0 | 825.5 | 20.66 | 116.41 |
| | | | 1/0 | 836.5 | 20.20 | 104.71 |
| | | | 1/0 | 847.5 | 20.13 | 103.04 |
| | | 16QAM | 1/0 | 825.5 | 19.71 | 93.54 |
| | | | 1/0 | 836.5 | 19.44 | 87.90 |
| | | | 1/0 | 847.5 | 19.30 | 85.11 |
| | 1.4 | QPSK | 1/0 | 824.7 | 19.91 | 97.95 |
| | | | 1/0 | 836.5 | 21.30 | 134.90 |
| | | | 1/0 | 848.3 | 20.86 | 121.90 |
| | | 16QAM | 1/0 | 824.7 | 19.11 | 81.47 |
| | | | 1/0 | 836.5 | 19.72 | 93.76 |
| | | | 1/0 | 848.3 | 17.85 | 60.95 |


UL VERFICATION SERVICES FORM ID: FCC_22_24_27_90
47173 BENICIA STREET, FREMONT, CA 94538, USA TEL: (510) 771-1000 FAX: (510) 661-0888
*This report shall not be reproduced except in full, without the written approval of UL Verification Services Inc.*

**LTE Band 12**

| Band | BW (MHz) | Mode | RB/RB Size | f (MHz) | ERP / EIRP | |
|---|---|---|---|---|---|---|
| | | | | | dBm | mW |
| LTE12 | 10 | QPSK | 1/0 | 704 | 16.12 | 40.93 |
| | | | 1/0 | 707.5 | 15.58 | 36.14 |
| | | | 1/0 | 711 | 16.68 | 46.56 |
| | | 16QAM | 1/0 | 704 | 15.50 | 35.48 |
| | | | 1/0 | 707.5 | 15.47 | 35.24 |
| | | | 1/0 | 711 | 15.34 | 34.20 |
| | 5 | QPSK | 1/0 | 701.5 | 15.87 | 38.64 |
| | | | 1/0 | 707.5 | 15.45 | 35.08 |
| | | | 1/0 | 713.5 | 16.13 | 41.02 |
| | | 16QAM | 1/0 | 701.5 | 14.98 | 31.48 |
| | | | 1/0 | 707.5 | 14.65 | 29.17 |
| | | | 1/0 | 713.5 | 15.06 | 32.06 |
| | 3 | QPSK | 1/0 | 700.5 | 15.32 | 34.04 |
| | | | 1/0 | 707.5 | 14.38 | 27.42 |
| | | | 1/0 | 714.5 | 15.60 | 36.31 |
| | | 16QAM | 1/0 | 700.5 | 14.85 | 30.55 |
| | | | 1/0 | 707.5 | 13.70 | 23.44 |
| | | | 1/0 | 714.5 | 14.87 | 30.69 |
| | 1.4 | QPSK | 1/0 | 699.7 | 14.76 | 29.92 |
| | | | 1/0 | 707.5 | 14.69 | 29.44 |
| | | | 1/0 | 715.3 | 15.28 | 33.73 |
| | | 16QAM | 1/0 | 699.7 | 13.70 | 23.44 |
| | | | 1/0 | 707.5 | 14.07 | 25.53 |
| | | | 1/0 | 715.3 | 14.73 | 29.72 |


UL VERFICATION SERVICES FORM ID: FCC_22_24_27_90
47173 BENICIA STREET, FREMONT, CA 94538, USA TEL: (510) 771-1000 FAX: (510) 661-0888
*This report shall not be reproduced except in full, without the written approval of UL Verification Services Inc.*

**LTE Band 25**

| Band | BW (MHz) | Mode | RB/RB Size | f (MHz) | ERP / EIRP | |
|---|---|---|---|---|---|---|
| | | | | | dBm | mW |
| LTE25 | 20 | QPSK | 1/0 | 1860 | 25.07 | 321.37 |
| | | | 1/0 | 1882.5 | 25.10 | 323.59 |
| | | | 1/0 | 1905 | 25.40 | 346.74 |
| | | 16QAM | 1/0 | 1860 | 24.40 | 275.42 |
| | | | 1/0 | 1882.5 | 24.50 | 281.84 |
| | | | 1/0 | 1905 | 24.78 | 300.61 |
| | 15 | QPSK | 1/0 | 1857.5 | 24.80 | 302.00 |
| | | | 1/0 | 1882.5 | 24.90 | 309.03 |
| | | | 1/0 | 1907.5 | 25.30 | 338.84 |
| | | 16QAM | 1/0 | 1857.5 | 24.15 | 260.02 |
| | | | 1/0 | 1882.5 | 24.40 | 275.42 |
| | | | 1/0 | 1907.5 | 24.70 | 295.12 |
| | 10 | QPSK | 1/0 | 1855 | 24.72 | 296.48 |
| | | | 1/0 | 1882.5 | 25.30 | 338.84 |
| | | | 1/0 | 1910 | 25.10 | 323.59 |
| | | 16QAM | 1/0 | 1855 | 24.00 | 251.19 |
| | | | 1/0 | 1882.5 | 24.70 | 295.12 |
| | | | 1/0 | 1910 | 24.40 | 275.42 |
| | 5 | QPSK | 1/0 | 1852.5 | 24.60 | 288.40 |
| | | | 1/0 | 1882.5 | 25.50 | 354.81 |
| | | | 1/0 | 1912.5 | 25.10 | 323.59 |
| | | 16QAM | 1/0 | 1852.5 | 23.90 | 245.47 |
| | | | 1/0 | 1882.5 | 24.80 | 302.00 |
| | | | 1/0 | 1912.5 | 24.40 | 275.42 |


*This report shall not be reproduced except in full, without the written approval of UL Verification Services Inc.*

| Band | BW (MHz) | Mode | RB/RB Size | f (MHz) | ERP / EIRP | |
|---|---|---|---|---|---|---|
| | | | | | dBm | mW |
| LTE25 | 3 | QPSK | 1/0 | 1851.5 | 24.70 | 295.12 |
| | | | 1/0 | 1882.5 | 25.69 | 370.68 |
| | | | 1/0 | 1913.5 | 25.20 | 331.13 |
| | | 16QAM | 1/0 | 1851.5 | 24.15 | 260.02 |
| | | | 1/0 | 1882.5 | 25.08 | 322.11 |
| | | | 1/0 | 1913.5 | 24.50 | 281.84 |
| | 1.4 | QPSK | 1/0 | 1850.7 | 24.68 | 293.43 |
| | | | 1/0 | 1882.5 | 25.28 | 337.29 |
| | | | 1/0 | 1914.3 | 25.87 | 386.01 |
| | | 16QAM | 1/0 | 1850.7 | 23.70 | 234.42 |
| | | | 1/0 | 1882.5 | 24.50 | 281.84 |
| | | | 1/0 | 1914.3 | 25.10 | 323.59 |


*This report shall not be reproduced except in full, without the written approval of UL Verification Services Inc.*

**LTE Band 26**

| Band | BW (MHz) | Mode | RB/RB Size | f (MHz) | ERP / EIRP | |
|---|---|---|---|---|---|---|
| | | | | | dBm | mW |
| LTE26 | 15 | QPSK | 1/0 | 831.5 | 20.19 | 104.47 |
| | | | 1/0 | 836.5 | 19.69 | 93.11 |
| | | | 1/0 | 841.5 | 20.54 | 113.24 |
| | | 16QAM | 1/0 | 831.5 | 19.31 | 85.31 |
| | | | 1/0 | 836.5 | 18.97 | 78.89 |
| | | | 1/0 | 841.5 | 19.47 | 88.51 |
| | 10 | QPSK | 1/0 | 819 | 20.55 | 113.50 |
| | | | 1/0 | 831.5 | 20.24 | 105.68 |
| | | | 1/0 | 844 | 20.16 | 103.75 |
| | | 16QAM | 1/0 | 819 | 19.30 | 85.11 |
| | | | 1/0 | 831.5 | 20.01 | 100.23 |
| | | | 1/0 | 844 | 19.44 | 87.90 |
| | 5 | QPSK | 1/0 | 816.5 | 20.45 | 110.92 |
| | | | 1/0 | 831.5 | 20.21 | 104.95 |
| | | | 1/0 | 846.5 | 19.83 | 96.16 |
| | | 16QAM | 1/0 | 816.5 | 19.62 | 91.62 |
| | | | 1/0 | 831.5 | 19.13 | 81.85 |
| | | | 1/0 | 846.5 | 19.31 | 85.31 |
| | 3 | QPSK | 1/0 | 815.5 | 20.66 | 116.41 |
| | | | 1/0 | 831.5 | 20.20 | 104.71 |
| | | | 1/0 | 847.5 | 20.13 | 103.04 |
| | | 16QAM | 1/0 | 815.5 | 19.71 | 93.54 |
| | | | 1/0 | 831.5 | 19.44 | 87.90 |
| | | | 1/0 | 847.5 | 19.30 | 85.11 |
| | 1.4 | QPSK | 1/0 | 814.7 | 19.91 | 97.95 |
| | | | 1/0 | 831.5 | 21.30 | 134.90 |
| | | | 1/0 | 848.3 | 20.86 | 121.90 |
| | | 16QAM | 1/0 | 814.7 | 19.11 | 81.47 |
| | | | 1/0 | 831.5 | 19.72 | 93.76 |
| | | | 1/0 | 848.3 | 17.85 | 60.95 |


UL VERFICATION SERVICES FORM ID: FCC_22_24_27_90
47173 BENICIA STREET, FREMONT, CA 94538, USA TEL: (510) 771-1000 FAX: (510) 661-0888
*This report shall not be reproduced except in full, without the written approval of UL Verification Services Inc.*

**LTE Band 41**

| Band | BW (MHz) | Mode | RB/RB Size | f (MHz) | ERP / EIRP | |
|---|---|---|---|---|---|---|
| | | | | | dBm | mW |
| LTE41 | 20 | QPSK | 1/0 | 2506 | 25.14 | 326.59 |
| | | | 1/0 | 2593 | 25.41 | 347.21 |
| | | | 1/0 | 2680 | 25.03 | 318.10 |
| | | 16QAM | 1/0 | 2506 | 24.98 | 314.76 |
| | | | 1/0 | 2593 | 25.11 | 324.03 |
| | | | 1/0 | 2680 | 24.73 | 296.87 |
| | 15 | QPSK | 1/0 | 2503.5 | 25.18 | 329.54 |
| | | | 1/0 | 2593 | 25.51 | 355.30 |
| | | | 1/0 | 2682.5 | 24.73 | 297.33 |
| | | 16QAM | 1/0 | 2503.5 | 24.58 | 287.02 |
| | | | 1/0 | 2593 | 24.91 | 309.45 |
| | | | 1/0 | 2682.5 | 24.33 | 271.17 |
| | 10 | QPSK | 1/0 | 2501 | 25.38 | 345.01 |
| | | | 1/0 | 2593 | 25.81 | 380.71 |
| | | | 1/0 | 2685 | 24.44 | 277.92 |
| | | 16QAM | 1/0 | 2501 | 25.16 | 327.97 |
| | | | 1/0 | 2593 | 24.81 | 302.41 |
| | | | 1/0 | 2685 | 24.04 | 253.47 |
| | 5 | QPSK | 1/0 | 2498.5 | 24.93 | 311.44 |
| | | | 1/0 | 2593 | 26.63 | 460.67 |
| | | | 1/0 | 2687.5 | 25.37 | 344.51 |
| | | 16QAM | 1/0 | 2498.5 | 24.07 | 255.49 |
| | | | 1/0 | 2593 | 25.51 | 355.30 |
| | | | 1/0 | 2687.5 | 24.65 | 291.47 |


UL VERFICATION SERVICES FORM ID: FCC_22_24_27_90
47173 BENICIA STREET, FREMONT, CA 94538, USA TEL: (510) 771-1000 FAX: (510) 661-0888
*This report shall not be reproduced except in full, without the written approval of UL Verification Services Inc.*

### 9.1.3. ERP/EIRP PLOTS

**GSM**

Band

GSM 1900

EGPRS

**High Frequency Substitution Measurement**
**UL Verification Services, Inc.**

**Company:** LG
**Project #:** 15I20514
**Date:** 4/16/2015
**Test Engineer:** R.Z
**Configuration:** EUT Only
**Location:** Chamber G
**Mode:** EGPRS 1900 MHz Fundamentals

**Test Equpment:**
**Receiving: Horn T711, and Chamber G SMA Cables**
**Substitution: Horn T59, 6ft SMA Cable**

| f MHz | SG reading (dBm) | Ant. Pol. (H/V) | Cable Loss (dB) | Antenna Gain (dBi) | EIRP (dBm) | Limit (dBm) | Delta (dB) | Notes |
|---|---|---|---|---|---|---|---|---|
| Low Ch | | | | | | | | |
| 1850.20 | 10.50 | V | 0.9 | 9.2 | 18.80 | 33.0 | -14.2 | |
| 1850.20 | 20.10 | H | 0.9 | 9.2 | 28.40 | 33.0 | -4.6 | |
| Mid Ch | | | | | | | | |
| 1880.00 | 10.80 | V | 0.9 | 9.2 | 19.10 | 33.0 | -13.9 | |
| 1880.00 | 20.60 | H | 0.9 | 9.2 | 28.90 | 33.0 | -4.1 | |
| High Ch | | | | | | | | |
| 1909.80 | 10.80 | V | 0.9 | 9.1 | 19.00 | 33.0 | -14.0 | |
| 1909.80 | 20.50 | H | 0.9 | 9.1 | 28.70 | 33.0 | -4.3 | |


*This report shall not be reproduced except in full, without the written approval of UL Verification Services Inc.*

Band

GSM 1900

GPRS

**High Frequency Substitution Measurement**
**UL Verification Services, Inc.**

**Company:** LG
**Project #:** 15I20514
**Date:** 4/16/2015
**Test Engineer:** R.Z
**Configuration:** EUT Only
**Location:** Chamber G
**Mode:** GPRS 1900 MHz Fundamentals

**Test Equipment:**
**Receiving: Horn T711, and Chamber G SMA Cables**
**Substitution: Horn T59, 6ft SMA Cable**

| f MHz | SG reading (dBm) | Ant. Pol. (H/V) | Cable Loss (dB) | Antenna Gain (dBi) | EIRP (dBm) | Limit (dBm) | Delta (dB) | Notes |
|---|---|---|---|---|---|---|---|---|
| Low Ch | | | | | | | | |
| 1850.20 | 14.30 | V | 0.9 | 9.2 | 22.60 | 33.0 | -10.4 | |
| 1850.20 | 22.10 | H | 0.9 | 9.2 | 30.40 | 33.0 | -2.6 | |
| Mid Ch | | | | | | | | |
| 1880.00 | 14.30 | V | 0.9 | 9.2 | 22.60 | 33.0 | -10.4 | |
| 1880.00 | 22.30 | H | 0.9 | 9.2 | 30.60 | 33.0 | -2.4 | |
| High Ch | | | | | | | | |
| 1909.80 | 14.70 | V | 0.9 | 9.1 | 22.90 | 33.0 | -10.1 | |
| 1909.80 | 22.60 | H | 0.9 | 9.1 | 30.80 | 33.0 | -2.2 | |


*This report shall not be reproduced except in full, without the written approval of UL Verification Services Inc.*

Band

GSM 850

EGPRS

**High Frequency Substitution Measurement**
**UL Verification Services, Inc.**

**Company:** LG
**Project #:** 15I20514
**Date:** 04/22/15
**Test Engineer:** O. Stoelting
**Configuration:** X-pos EUT Only
**Mode:** EGPRS850

**Test Equipment:**
**Receiving: Hybrid T243, and Chamber B N-type Cable**
**Substitution: Dipole T273, 5ft N Cable Warehouse.**

| f MHz | SG reading (dBm) | Ant. Pol. (H/V) | Cable Loss (dB) | Antenna Gain (dBd) | ERP (dBm) | Limit (dBm) | Margin (dB) | Notes |
|---|---|---|---|---|---|---|---|---|
| Low Ch | | | | | | | | |
| 824.20 | 20.21 | V | 0.9 | 0.0 | 19.31 | 38.5 | -19.1 | |
| 824.20 | 25.65 | H | 0.9 | 0.0 | 24.75 | 38.5 | -13.7 | |
| Mid Ch | | | | | | | | |
| 836.60 | 18.76 | V | 0.9 | 0.0 | 17.86 | 38.5 | -20.6 | |
| 836.60 | 25.53 | H | 0.9 | 0.0 | 24.63 | 38.5 | -13.8 | |
| High Ch | | | | | | | | |
| 848.80 | 16.76 | V | 0.9 | 0.0 | 15.86 | 38.5 | -22.6 | |
| 848.80 | 24.01 | H | 0.9 | 0.0 | 23.11 | 38.5 | -15.3 | |

Rev. 3.17.11
Note: For Band 13/17 ERP limit is 34.77dBm; For Band 26 limit is 50dBm


*This report shall not be reproduced except in full, without the written approval of UL Verification Services Inc.*

Band

GSM 850

GPRS

**High Frequency Substitution Measurement**
**UL Verification Services, Inc.**

**Company:** LG
**Project #:** 15I20514
**Date:** 04/22/15
**Test Engineer:** O. Stoelting
**Configuration:** X-pos EUT Only
**Mode:** GPRS850

**Test Equipment:**
**Receiving: Hybrid T243, and Chamber B N-type Cable**
**Substitution: Dipole T273, 5ft N Cable Warehouse.**

| f MHz | SG reading (dBm) | Ant. Pol. (H/V) | Cable Loss (dB) | Antenna Gain (dBd) | ERP (dBm) | Limit (dBm) | Margin (dB) | Notes |
|---|---|---|---|---|---|---|---|---|
| Low Ch | | | | | | | | |
| 824.20 | 24.24 | V | 0.9 | 0.0 | 23.34 | 38.5 | -15.1 | |
| 824.20 | 31.03 | H | 0.9 | 0.0 | 30.13 | 38.5 | -8.3 | |
| Mid Ch | | | | | | | | |
| 836.60 | 22.34 | V | 0.9 | 0.0 | 21.44 | 38.5 | -17.0 | |
| 836.60 | 31.14 | H | 0.9 | 0.0 | 30.24 | 38.5 | -8.2 | |
| High Ch | | | | | | | | |
| 848.80 | 21.44 | V | 0.9 | 0.0 | 20.54 | 38.5 | -17.9 | |
| 848.80 | 30.50 | H | 0.9 | 0.0 | 29.61 | 38.5 | -8.8 | |

Rev. 3.17.11
Note: For Band 13/17 ERP limit is 34.77dBm; For Band 26 limit is 50dBm


UL VERFICATION SERVICES FORM ID: FCC_22_24_27_90
47173 BENICIA STREET, FREMONT, CA 94538, USA TEL: (510) 771-1000 FAX: (510) 661-0888
*This report shall not be reproduced except in full, without the written approval of UL Verification Services Inc.*

**WCDMA**

Band

Band 2

HSDPA

**High Frequency Substitution Measurement**
**UL Verification Services, Inc.**

**Company:** LG
**Project #:** 15I20514
**Date:** 4/16/2015
**Test Engineer:** R.Z
**Configuration:** EUT Only
**Location:** Chamber G
**Mode:** HSDPA Band 2 Fundamentals

**Test Equpment:**
**Receiving: Horn T711, and Chamber G SMA Cables**
**Substitution: Horn T59, 6ft SMA Cable**

| f MHz | SG reading (dBm) | Ant. Pol. (H/V) | Cable Loss (dB) | Antenna Gain (dBi) | EIRP (dBm) | Limit (dBm) | Delta (dB) | Notes |
|---|---|---|---|---|---|---|---|---|
| Low Ch | | | | | | | | |
| 1852.40 | 14.50 | V | 0.9 | 9.2 | 22.80 | 33.0 | -10.2 | |
| 1852.40 | 15.70 | H | 0.9 | 9.2 | 24.00 | 33.0 | -9.0 | |
| Mid Ch | | | | | | | | |
| 1880.00 | 15.10 | V | 0.9 | 9.2 | 23.40 | 33.0 | -9.6 | |
| 1880.00 | 16.40 | H | 0.9 | 9.2 | 24.70 | 33.0 | -8.3 | |
| High Ch | | | | | | | | |
| 1907.60 | 15.20 | V | 0.9 | 9.1 | 23.40 | 33.0 | -9.6 | |
| 1907.60 | 15.90 | H | 0.9 | 9.1 | 24.10 | 33.0 | -8.9 | |


*This report shall not be reproduced except in full, without the written approval of UL Verification Services Inc.*

Band

Band 2

REL99

**High Frequency Substitution Measurement**
**UL Verification Services, Inc.**

**Company:** LG
**Project #:** 15I20514
**Date:** 4/16/2015
**Test Engineer:** R.Z
**Configuration:** EUT Only
**Location:** Chamber G
**Mode:** Rel99 Band 2 Fundamentals

**Test Equpment:**
**Receiving: Horn T711, and Chamber G SMA Cables**
**Substitution: Horn T59, 6ft SMA Cable**

| f MHz | SG reading (dBm) | Ant. Pol. (H/V) | Cable Loss (dB) | Antenna Gain (dBi) | EIRP (dBm) | Limit (dBm) | Delta (dB) | Notes |
|---|---|---|---|---|---|---|---|---|
| Low Ch | | | | | | | | |
| 1852.40 | 14.80 | V | 0.9 | 9.2 | 23.10 | 33.0 | -9.9 | |
| 1852.40 | 16.00 | H | 0.9 | 9.2 | 24.30 | 33.0 | -8.7 | |
| Mid Ch | | | | | | | | |
| 1880.00 | 15.50 | V | 0.9 | 9.2 | 23.80 | 33.0 | -9.2 | |
| 1880.00 | 16.80 | H | 0.9 | 9.2 | 25.10 | 33.0 | -7.9 | |
| High Ch | | | | | | | | |
| 1907.60 | 15.46 | V | 0.9 | 9.1 | 23.66 | 33.0 | -9.3 | |
| 1907.60 | 16.50 | H | 0.9 | 9.1 | 24.70 | 33.0 | -8.3 | |


*This report shall not be reproduced except in full, without the written approval of UL Verification Services Inc.*

Band

Band 5

HSDPA

**High Frequency Substitution Measurement**
**UL Verification Services, Inc. Chamber C**

**Company:** LG
**Project #:** 15I20514
**Date:** 04/24/15
**Test Engineer:** O. Stoelting
**Configuration:** X-pos EUT
**Mode:** WCDMA Band 5 HSDPA

**Test Equipment:**
**Receiving: Sunol T185, and 3m Chamber C N-type Cable**
**Substitution: Dipole T416, 6ft SMA Cable Warehouse**

| f MHz | SG reading (dBm) | Ant. Pol. (H/V) | Cable Loss (dB) | Antenna Gain (dBd) | ERP (dBm) | Limit (dBm) | Margin (dB) | Notes |
|---|---|---|---|---|---|---|---|---|
| Low Ch | | | | | | | | |
| 826.40 | 13.39 | V | 0.9 | 0.0 | 12.49 | 38.5 | -26.0 | |
| 826.40 | 22.48 | H | 0.9 | 0.0 | 21.58 | 38.5 | -16.9 | |
| Mid Ch | | | | | | | | |
| 836.60 | 14.05 | V | 0.9 | 0.0 | 13.15 | 38.5 | -25.3 | |
| 836.60 | 21.10 | H | 0.9 | 0.0 | 20.20 | 38.5 | -18.2 | |
| High Ch | | | | | | | | |
| 846.60 | 14.03 | V | 0.9 | 0.0 | 13.13 | 38.5 | -25.3 | |
| 846.60 | 21.79 | H | 0.9 | 0.0 | 20.89 | 38.5 | -17.6 | |

Rev. 3.17.11
Note: For Band 13/17 ERP limit is 34.77dBm; For Band 26 limit is 50dBm


UL VERFICATION SERVICES FORM ID: FCC_22_24_27_90
47173 BENICIA STREET, FREMONT, CA 94538, USA TEL: (510) 771-1000 FAX: (510) 661-0888
*This report shall not be reproduced except in full, without the written approval of UL Verification Services Inc.*

Band

Band 5

REL99

**High Frequency Substitution Measurement**
**UL Verification Services, Inc. Chamber C**

**Company:** LG
**Project #:** 15I20514
**Date:** 04/24/15
**Test Engineer:** O. Stoelting
**Configuration:** X-pos EUT
**Mode:** REL99 B5 FUND

**Test Equipment:**
**Receiving: Sunol T185, and 3m Chamber C N-type Cable**
**Substitution: Dipole T416, 6ft SMA Cable Warehouse**

| f MHz | SG reading (dBm) | Ant. Pol. (H/V) | Cable Loss (dB) | Antenna Gain (dBd) | ERP (dBm) | Limit (dBm) | Margin (dB) | Notes |
|---|---|---|---|---|---|---|---|---|
| Low Ch | | | | | | | | |
| 826.40 | 13.22 | V | 0.9 | 0.0 | 12.32 | 38.5 | -26.1 | |
| 826.40 | 22.79 | H | 0.9 | 0.0 | 21.89 | 38.5 | -16.6 | |
| Mid Ch | | | | | | | | |
| 836.60 | 13.54 | V | 0.9 | 0.0 | 12.64 | 38.5 | -25.8 | |
| 836.60 | 21.33 | H | 0.9 | 0.0 | 20.43 | 38.5 | -18.0 | |
| High Ch | | | | | | | | |
| 846.60 | 13.22 | V | 0.9 | 0.0 | 12.32 | 38.5 | -26.1 | |
| 846.60 | 21.83 | H | 0.9 | 0.0 | 20.93 | 38.5 | -17.5 | |

Rev. 3.17.11
Note: For Band 13/17 ERP limit is 34.77dBm; For Band 26 limit is 50dBm


UL VERFICATION SERVICES FORM ID: FCC_22_24_27_90
47173 BENICIA STREET, FREMONT, CA 94538, USA TEL: (510) 771-1000 FAX: (510) 661-0888
*This report shall not be reproduced except in full, without the written approval of UL Verification Services Inc.*

## CDMA

Band

BC1

**High Frequency Substitution Measurement**
**UL Verification Services Chamber G**

**Company:** LG
**Project #:** 15I20514
**Date:** 4/16/2015
**Test Engineer:** R.Z
**Configuration:** EUT Only
**Mode:** CDMA EVDO BC1

**Test Equipment:**
**Receiving: Horn T711, and Chamber G SMA Cables**
**Substitution: Horn T59 Substitution, 6ft SMA Cable**

| f GHz | SG reading (dBm) | Ant. Pol. (H/V) | Cable Loss (dB) | Antenna Gain (dBi) | EIRP (dBm) | Limit (dBm) | Delta (dB) | Notes |
|---|---|---|---|---|---|---|---|---|
| Low Ch | | | | | | | | |
| 1.8513 | 11.2 | V | 0.85 | 9.20 | 19.55 | 33.0 | -13.5 | |
| 1.8513 | 17.2 | H | 0.85 | 9.20 | 25.55 | 33.0 | -7.5 | |
| Mid Ch | | | | | | | | |
| 1.8800 | 11.8 | V | 0.85 | 9.20 | 20.15 | 33.0 | -12.9 | |
| 1.8800 | 17.9 | H | 0.85 | 9.20 | 26.25 | 33.0 | -6.8 | |
| High Ch | | | | | | | | |
| 1.9088 | 12.6 | V | 0.85 | 9.10 | 20.81 | 33.0 | -12.2 | |
| 1.9088 | 18.4 | H | 0.85 | 9.10 | 26.65 | 33.0 | -6.4 | |

Rev. 3.17.11


*This report shall not be reproduced except in full, without the written approval of UL Verification Services Inc.*

Band

BC1

1xRTT

**High Frequency Substitution Measurement**
**UL Verification Services Chamber G**

**Company:** LG
**Project #:** 15I20514
**Date:** 4/16/2015
**Test Engineer:** R.Z
**Configuration:** EUT Only
**Mode:** CDMA RTT BC1

**Test Equipment:**
**Receiving: Horn T711, and Chamber G SMA Cables**
**Substitution: Horn T59 Substitution, 6ft SMA Cable**

| f GHz | SG reading (dBm) | Ant. Pol. (H/V) | Cable Loss (dB) | Antenna Gain (dBi) | EIRP (dBm) | Limit (dBm) | Delta (dB) | Notes |
|---|---|---|---|---|---|---|---|---|
| Low Ch | | | | | | | | |
| 1.8513 | 9.4 | V | 0.85 | 9.20 | 17.75 | 33.0 | -15.3 | |
| 1.8513 | 17.4 | H | 0.85 | 9.20 | 25.75 | 33.0 | -7.3 | |
| Mid Ch | | | | | | | | |
| 1.8800 | 9.7 | V | 0.85 | 9.20 | 18.05 | 33.0 | -15.0 | |
| 1.8800 | 18.1 | H | 0.85 | 9.20 | 26.45 | 33.0 | -6.6 | |
| High Ch | | | | | | | | |
| 1.9088 | 10.5 | V | 0.85 | 9.10 | 18.75 | 33.0 | -14.3 | |
| 1.9088 | 18.5 | H | 0.85 | 9.10 | 26.75 | 33.0 | -6.3 | |

Rev. 3.17.11


UL VERFICATION SERVICES FORM ID: FCC_22_24_27_90
47173 BENICIA STREET, FREMONT, CA 94538, USA TEL: (510) 771-1000 FAX: (510) 661-0888
*This report shall not be reproduced except in full, without the written approval of UL Verification Services Inc.*

Band

BC0

**High Frequency Substitution Measurement**
**UL Verification Services Chamber G**

**Company:** LG
**Project #:** 15I20514
**Date:** 4/28/2015
**Test Engineer:** A. Escamilla
**Configuration:** EUT Only
**Mode:** CDMA EVDO BC0

**Test Equipment:**
**Receiving: Hybrid T185, and Chamber N-type Cable**
**Substitution: Dipole T416, 4ft SMA Cable Warehouse**

| f MHz | SG reading (dBm) | Ant. Pol. (H/V) | Cable Loss (dB) | Antenna Gain (dBd) | ERP (dBm) | Limit (dBm) | Margin (dB) | Notes |
|---|---|---|---|---|---|---|---|---|
| Low Ch | | | | | | | | |
| 824.70 | 14.14 | V | 0.9 | 0.0 | 13.24 | 38.5 | -25.2 | |
| 824.70 | 22.59 | H | 0.9 | 0.0 | 21.69 | 38.5 | -16.8 | |
| Mid Ch | | | | | | | | |
| 836.52 | 14.70 | V | 0.9 | 0.0 | 13.80 | 38.5 | -24.7 | |
| 836.52 | 22.01 | H | 0.9 | 0.0 | 21.11 | 38.5 | -17.3 | |
| High Ch | | | | | | | | |
| 848.31 | 15.24 | V | 0.9 | 0.0 | 14.34 | 38.5 | -24.1 | |
| 848.31 | 21.85 | H | 0.9 | 0.0 | 20.95 | 38.5 | -17.5 | |
| | | | | | | | | |


*This report shall not be reproduced except in full, without the written approval of UL Verification Services Inc.*

Band

BC0

1xRTT

**High Frequency Substitution Measurement**
**UL Verification Services Chamber G**

**Company:** LG
**Project #:** 15I20514
**Date:** 4/28/2015
**Test Engineer:** A. Escamilla
**Configuration:** EUT Only
**Mode:** CDMA RTT BC0

**Test Equipment:**
**Receiving: Hybrid T185, and Chamber N-type Cable**
**Substitution: Dipole T416, 4ft SMA Cable Warehouse**

| f MHz | SG reading (dBm) | Ant. Pol. (H/V) | Cable Loss (dB) | Antenna Gain (dBd) | ERP (dBm) | Limit (dBm) | Margin (dB) | Notes |
|---|---|---|---|---|---|---|---|---|
| Low Ch | | | | | | | | |
| 824.70 | 14.21 | V | 0.9 | 0.0 | 13.31 | 38.5 | -25.1 | |
| 824.70 | 22.86 | H | 0.9 | 0.0 | 21.96 | 38.5 | -16.5 | |
| Mid Ch | | | | | | | | |
| 836.52 | 14.75 | V | 0.9 | 0.0 | 13.85 | 38.5 | -24.6 | |
| 836.52 | 22.01 | H | 0.9 | 0.0 | 21.11 | 38.5 | -17.3 | |
| High Ch | | | | | | | | |
| 848.31 | 15.02 | V | 0.9 | 0.0 | 14.12 | 38.5 | -24.3 | |
| 848.31 | 22.01 | H | 0.9 | 0.0 | 21.11 | 38.5 | -17.3 | |

Rev. 3.17.11


UL VERFICATION SERVICES FORM ID: FCC_22_24_27_90
47173 BENICIA STREET, FREMONT, CA 94538, USA TEL: (510) 771-1000 FAX: (510) 661-0888
*This report shall not be reproduced except in full, without the written approval of UL Verification Services Inc.*

Band

BC10

**High Frequency Substitution Measurement**
**UL Verification Services Chamber G**

**Company:** LG
**Project #:** 15I20514
**Date:** 4/28/2015
**Test Engineer:** A. Escamilla
**Configuration:** EUT Only
**Mode:** CDMA EVDO BC10

**Test Equipment:**
**Receiving: Hybrid T185, and Chamber N-type Cable**
**Substitution: Dipole T416, 4ft SMA Cable Warehouse**

| f MHz | SG reading (dBm) | Ant. Pol. (H/V) | Cable Loss (dB) | Antenna Gain (dBd) | ERP (dBm) | Limit (dBm) | Margin (dB) | Notes |
|---|---|---|---|---|---|---|---|---|
| Low Ch | | | | | | | | |
| 817.90 | 14.13 | V | 0.9 | 0.0 | 13.23 | 38.5 | -25.2 | |
| 817.90 | 22.37 | H | 0.9 | 0.0 | 21.47 | 38.5 | -17.0 | |
| Mid Ch | | | | | | | | |
| 820.50 | 14.95 | V | 0.9 | 0.0 | 14.05 | 38.5 | -24.4 | |
| 820.50 | 22.48 | H | 0.9 | 0.0 | 21.58 | 38.5 | -16.9 | |
| High Ch | | | | | | | | |
| 823.10 | 15.62 | V | 0.9 | 0.0 | 14.72 | 38.5 | -23.7 | |
| 823.10 | 22.54 | H | 0.9 | 0.0 | 21.64 | 38.5 | -16.8 | |
| | | | | | | | | |


*This report shall not be reproduced except in full, without the written approval of UL Verification Services Inc.*

Band

BC10

1xRTT

**High Frequency Substitution Measurement**
**UL Verification Services Chamber G**

**Company:** LG
**Project #:** 15I20514
**Date:** 4/28/2015
**Test Engineer:** A. Escamilla
**Configuration:** EUT Only
**Mode:** CDMA RTT BC10

**Test Equipment:**
**Receiving: Hybrid T185, and Chamber N-type Cable**
**Substitution: Dipole T416, 4ft SMA Cable Warehouse**

| f MHz | SG reading (dBm) | Ant. Pol. (H/V) | Cable Loss (dB) | Antenna Gain (dBd) | ERP (dBm) | Limit (dBm) | Margin (dB) | Notes |
|---|---|---|---|---|---|---|---|---|
| Low Ch | | | | | | | | |
| 817.90 | 14.77 | V | 0.9 | 0.0 | 13.87 | 38.5 | -24.6 | -19.3 |
| 817.90 | 22.45 | H | 0.9 | 0.0 | 21.55 | 38.5 | -16.9 | -10.2 |
| Mid Ch | | | | | | | | |
| 820.50 | 15.44 | V | 0.9 | 0.0 | 14.54 | 38.5 | -23.9 | -19.5 |
| 820.50 | 22.43 | H | 0.9 | 0.0 | 21.53 | 38.5 | -16.9 | -10.3 |
| High Ch | | | | | | | | |
| 823.10 | 16.18 | V | 0.9 | 0.0 | 15.28 | 38.5 | -23.2 | -19.6 |
| 823.10 | 22.44 | H | 0.9 | 0.0 | 21.54 | 38.5 | -16.9 | -10.3 |

Rev. 3.17.11


UL VERFICATION SERVICES FORM ID: FCC_22_24_27_90
47173 BENICIA STREET, FREMONT, CA 94538, USA TEL: (510) 771-1000 FAX: (510) 661-0888
*This report shall not be reproduced except in full, without the written approval of UL Verification Services Inc.*

## LTE Band 2

Band

LTE2

20MHz

16QAM

**High Frequency Substitution Measurement**
**UL Verification Services, Inc.**

**Company:** LG
**Project #:** 15I20514
**Date:** 4/16/2015
**Test Engineer:** R.Z
**Configuration:** EUT Only
**Location:** Chamber G
**Mode:** LTE_16QAM Band 2 Fundamentals, 20MHz Bandwidth

**Test Equpment:**
**Receiving: Horn T711, and Chamber G SMA Cables**
**Substitution: Horn T59, 6ft SMA Cable**

| f MHz | SG reading (dBm) | Ant. Pol. (H/V) | Cable Loss (dB) | Antenna Gain (dBi) | EIRP (dBm) | Limit (dBm) | Delta (dB) | Notes |
|---|---|---|---|---|---|---|---|---|
| Low Ch | | | | | | | | |
| 1860.00 | 14.70 | V | 0.9 | 9.2 | 23.00 | 33.0 | -10.0 | |
| 1860.00 | 16.10 | H | 0.9 | 9.2 | 24.40 | 33.0 | -8.6 | |
| Mid Ch | | | | | | | | |
| 1880.00 | 14.52 | V | 0.9 | 9.2 | 22.82 | 33.0 | -10.2 | |
| 1880.00 | 16.20 | H | 0.9 | 9.2 | 24.50 | 33.0 | -8.5 | |
| High Ch | | | | | | | | |
| 1900.00 | 15.20 | V | 0.9 | 9.1 | 23.40 | 33.0 | -9.6 | |
| 1900.00 | 16.58 | H | 0.9 | 9.1 | 24.78 | 33.0 | -8.2 | |


*This report shall not be reproduced except in full, without the written approval of UL Verification Services Inc.*

Band

LTE2

20MHz

QPSK

**High Frequency Substitution Measurement**
**UL Verification Services, Inc.**

**Company:** LG
**Project #:** 15I20514
**Date:** 4/16/2015
**Test Engineer:** R.Z
**Configuration:** EUT Only
**Location:** Chamber G
**Mode:** LTE_QPSK Band 2 Fundamentals, 20MHz Bandwidth

**Test Equipment:**
**Receiving: Horn T711, and Chamber G SMA Cables**
**Substitution: Horn T59, 6ft SMA Cable**

| f MHz | SG reading (dBm) | Ant. Pol. (H/V) | Cable Loss (dB) | Antenna Gain (dBi) | EIRP (dBm) | Limit (dBm) | Delta (dB) | Notes |
|---|---|---|---|---|---|---|---|---|
| Low Ch | | | | | | | | |
| 1860.00 | 15.40 | V | 0.9 | 9.2 | 23.70 | 33.0 | -9.3 | |
| 1860.00 | 16.77 | H | 0.9 | 9.2 | 25.07 | 33.0 | -7.9 | |
| Mid Ch | | | | | | | | |
| 1880.00 | 15.10 | V | 0.9 | 9.2 | 23.40 | 33.0 | -9.6 | |
| 1880.00 | 16.80 | H | 0.9 | 9.2 | 25.10 | 33.0 | -7.9 | |
| High Ch | | | | | | | | |
| 1900.00 | 15.90 | V | 0.9 | 9.1 | 24.10 | 33.0 | -8.9 | |
| 1900.00 | 17.20 | H | 0.9 | 9.1 | 25.40 | 33.0 | -7.6 | |


*This report shall not be reproduced except in full, without the written approval of UL Verification Services Inc.*

Band

LTE2

15MHz

16QAM

**High Frequency Substitution Measurement**
**UL Verification Services, Inc.**

**Company:** LG
**Project #:** 15I20514
**Date:** 4/16/2015
**Test Engineer:** R.Z
**Configuration:** EUT Only
**Location:** Chamber G
**Mode:** LTE_16QAM Band 2 Fundamentals, 15MHz Bandwidth

**Test Equipment:**
**Receiving: Horn T711, and Chamber G SMA Cables**
**Substitution: Horn T59, 6ft SMA Cable**

| f MHz | SG reading (dBm) | Ant. Pol. (H/V) | Cable Loss (dB) | Antenna Gain (dBi) | EIRP (dBm) | Limit (dBm) | Delta (dB) | Notes |
|---|---|---|---|---|---|---|---|---|
| Low Ch | | | | | | | | |
| 1857.50 | 15.20 | V | 0.9 | 9.2 | 23.50 | 33.0 | -9.5 | |
| 1857.50 | 15.85 | H | 0.9 | 9.2 | 24.15 | 33.0 | -8.9 | |
| Mid Ch | | | | | | | | |
| 1880.00 | 15.70 | V | 0.9 | 9.2 | 24.00 | 33.0 | -9.0 | |
| 1880.00 | 16.10 | H | 0.9 | 9.2 | 24.40 | 33.0 | -8.6 | |
| High Ch | | | | | | | | |
| 1902.50 | 16.40 | V | 0.9 | 9.1 | 24.60 | 33.0 | -8.4 | |
| 1902.50 | 16.50 | H | 0.9 | 9.1 | 24.70 | 33.0 | -8.3 | |


*This report shall not be reproduced except in full, without the written approval of UL Verification Services Inc.*

Band

LTE2

15MHz

QPSK

**High Frequency Substitution Measurement**
**UL Verification Services, Inc.**

**Company:** LG
**Project #:** 15I20514
**Date:** 4/16/2015
**Test Engineer:** R.Z
**Configuration:** EUT Only
**Location:** Chamber G
**Mode:** LTE_QPSK Band 2 Fundamentals, 15MHz Bandwidth

**Test Equpment:**
**Receiving: Horn T711, and Chamber G SMA Cables**
**Substitution: Horn T59, 6ft SMA Cable**

| f MHz | SG reading (dBm) | Ant. Pol. (H/V) | Cable Loss (dB) | Antenna Gain (dBi) | EIRP (dBm) | Limit (dBm) | Delta (dB) | Notes |
|---|---|---|---|---|---|---|---|---|
| Low Ch | | | | | | | | |
| 1857.50 | 15.90 | V | 0.9 | 9.2 | 24.20 | 33.0 | -8.8 | |
| 1857.50 | 16.50 | H | 0.9 | 9.2 | 24.80 | 33.0 | -8.2 | |
| Mid Ch | | | | | | | | |
| 1880.00 | 16.40 | V | 0.9 | 9.2 | 24.70 | 33.0 | -8.3 | |
| 1880.00 | 16.60 | H | 0.9 | 9.2 | 24.90 | 33.0 | -8.1 | |
| High Ch | | | | | | | | |
| 1902.50 | 17.10 | V | 0.9 | 9.1 | 25.30 | 33.0 | -7.7 | |
| 1902.50 | 17.10 | H | 0.9 | 9.1 | 25.30 | 33.0 | -7.7 | |


UL VERFICATION SERVICES FORM ID: FCC_22_24_27_90
47173 BENICIA STREET, FREMONT, CA 94538, USA TEL: (510) 771-1000 FAX: (510) 661-0888
*This report shall not be reproduced except in full, without the written approval of UL Verification Services Inc.*

Band

LTE2

10MHz

16QAM

**High Frequency Substitution Measurement**
**UL Verification Services, Inc.**

**Company:** LG
**Project #:** 15I20514
**Date:** 4/16/2015
**Test Engineer:** R.Z
**Configuration:** EUT Only
**Location:** Chamber G
**Mode:** LTE_16QAM Band 2 Fundamentals, 10MHz Bandwidth

**Test Equpment:**
**Receiving: Horn T711, and Chamber G SMA Cables**
**Substitution: Horn T59, 6ft SMA Cable**

| f MHz | SG reading (dBm) | Ant. Pol. (H/V) | Cable Loss (dB) | Antenna Gain (dBi) | EIRP (dBm) | Limit (dBm) | Delta (dB) | Notes |
|---|---|---|---|---|---|---|---|---|
| Low Ch | | | | | | | | |
| 1855.00 | 15.70 | V | 0.9 | 9.2 | 24.00 | 33.0 | -9.0 | |
| 1855.00 | 15.60 | H | 0.9 | 9.2 | 23.90 | 33.0 | -9.1 | |
| Mid Ch | | | | | | | | |
| 1880.00 | 15.50 | V | 0.9 | 9.2 | 23.80 | 33.0 | -9.2 | |
| 1880.00 | 16.40 | H | 0.9 | 9.2 | 24.70 | 33.0 | -8.3 | |
| High Ch | | | | | | | | |
| 1905.00 | 15.80 | V | 0.9 | 9.1 | 24.00 | 33.0 | -9.0 | |
| 1905.00 | 16.20 | H | 0.9 | 9.1 | 24.40 | 33.0 | -8.6 | |


UL VERFICATION SERVICES FORM ID: FCC_22_24_27_90
47173 BENICIA STREET, FREMONT, CA 94538, USA TEL: (510) 771-1000 FAX: (510) 661-0888
*This report shall not be reproduced except in full, without the written approval of UL Verification Services Inc.*

Band

LTE2

10MHz

QPSK

**High Frequency Substitution Measurement**
**UL Verification Services, Inc.**

**Company:** LG
**Project #:** 15I20514
**Date:** 4/16/2015
**Test Engineer:** R.Z
**Configuration:** EUT Only
**Location:** Chamber G
**Mode:** LTE_QPSK Band 2 Fundamentals, 10MHz Bandwidth

**Test Equipment:**
**Receiving: Horn T711, and Chamber G SMA Cables**
**Substitution: Horn T59, 6ft SMA Cable**

| f MHz | SG reading (dBm) | Ant. Pol. (H/V) | Cable Loss (dB) | Antenna Gain (dBi) | EIRP (dBm) | Limit (dBm) | Delta (dB) | Notes |
|---|---|---|---|---|---|---|---|---|
| Low Ch | | | | | | | | |
| 1855.00 | 16.40 | V | 0.9 | 9.2 | 24.70 | 33.0 | -8.3 | |
| 1855.00 | 16.42 | H | 0.9 | 9.2 | 24.72 | 33.0 | -8.3 | |
| Mid Ch | | | | | | | | |
| 1880.00 | 16.20 | V | 0.9 | 9.2 | 24.50 | 33.0 | -8.5 | |
| 1880.00 | 17.00 | H | 0.9 | 9.2 | 25.30 | 33.0 | -7.7 | |
| High Ch | | | | | | | | |
| 1905.00 | 16.50 | V | 0.9 | 9.1 | 24.70 | 33.0 | -8.3 | |
| 1905.00 | 16.90 | H | 0.9 | 9.1 | 25.10 | 33.0 | -7.9 | |


UL VERFICATION SERVICES FORM ID: FCC_22_24_27_90
47173 BENICIA STREET, FREMONT, CA 94538, USA TEL: (510) 771-1000 FAX: (510) 661-0888
*This report shall not be reproduced except in full, without the written approval of UL Verification Services Inc.*

Band

LTE2

5MHz

16QAM

**High Frequency Substitution Measurement**
**UL Verification Services, Inc.**

**Company:** LG
**Project #:** 15I20514
**Date:** 4/16/2015
**Test Engineer:** R.Z
**Configuration:** EUT Only
**Location:** Chamber G
**Mode:** LTE_16QAM Band 2 Fundamentals, 5MHz Bandwidth

**Test Equpment:**
**Receiving: Horn T711, and Chamber G SMA Cables**
**Substitution: Horn T59, 6ft SMA Cable**

| f MHz | SG reading (dBm) | Ant. Pol. (H/V) | Cable Loss (dB) | Antenna Gain (dBi) | EIRP (dBm) | Limit (dBm) | Delta (dB) | Notes |
|---|---|---|---|---|---|---|---|---|
| Low Ch | | | | | | | | |
| 1852.50 | 15.16 | V | 0.9 | 9.2 | 23.46 | 33.0 | -9.5 | |
| 1852.50 | 15.60 | H | 0.9 | 9.2 | 23.90 | 33.0 | -9.1 | |
| Mid Ch | | | | | | | | |
| 1880.00 | 15.80 | V | 0.9 | 9.2 | 24.10 | 33.0 | -8.9 | |
| 1880.00 | 16.50 | H | 0.9 | 9.2 | 24.80 | 33.0 | -8.2 | |
| High Ch | | | | | | | | |
| 1907.50 | 16.00 | V | 0.9 | 9.1 | 24.20 | 33.0 | -8.8 | |
| 1907.50 | 16.20 | H | 0.9 | 9.1 | 24.40 | 33.0 | -8.6 | |


*This report shall not be reproduced except in full, without the written approval of UL Verification Services Inc.*

Band

LTE2

5MHz

QPSK

**High Frequency Substitution Measurement**
**UL Verification Services, Inc.**

**Company:** LG
**Project #:** 15I20514
**Date:** 4/16/2015
**Test Engineer:** R.Z
**Configuration:** EUT Only
**Location:** Chamber G
**Mode:** LTE_QPSK Band 2 Fundamentals, 5MHz Bandwidth

**Test Equpment:**
**Receiving: Horn T711, and Chamber G SMA Cables**
**Substitution: Horn T59, 6ft SMA Cable**

| f MHz | SG reading (dBm) | Ant. Pol. (H/V) | Cable Loss (dB) | Antenna Gain (dBi) | EIRP (dBm) | Limit (dBm) | Delta (dB) | Notes |
|---|---|---|---|---|---|---|---|---|
| Low Ch | | | | | | | | |
| 1852.50 | 15.86 | V | 0.9 | 9.2 | 24.16 | 33.0 | -8.8 | |
| 1852.50 | 16.30 | H | 0.9 | 9.2 | 24.60 | 33.0 | -8.4 | |
| Mid Ch | | | | | | | | |
| 1880.00 | 16.60 | V | 0.9 | 9.2 | 24.90 | 33.0 | -8.1 | |
| 1880.00 | 17.20 | H | 0.9 | 9.2 | 25.50 | 33.0 | -7.5 | |
| High Ch | | | | | | | | |
| 1907.50 | 16.60 | V | 0.9 | 9.1 | 24.80 | 33.0 | -8.2 | |
| 1907.50 | 16.90 | H | 0.9 | 9.1 | 25.10 | 33.0 | -7.9 | |


UL VERFICATION SERVICES FORM ID: FCC_22_24_27_90
47173 BENICIA STREET, FREMONT, CA 94538, USA TEL: (510) 771-1000 FAX: (510) 661-0888
*This report shall not be reproduced except in full, without the written approval of UL Verification Services Inc.*

Band

LTE2

3MHz

16QAM

**High Frequency Substitution Measurement**
**UL Verification Services, Inc.**

**Company:** LG
**Project #:** 15I20514
**Date:** 4/16/2015
**Test Engineer:** R.Z
**Configuration:** EUT Only
**Location:** Chamber G
**Mode:** LTE_16QAM Band 2 Fundamentals, 3MHz Bandwidth

**Test Equpment:**
**Receiving: Horn T711, and Chamber G SMA Cables**
**Substitution: Horn T59, 6ft SMA Cable**

| f MHz | SG reading (dBm) | Ant. Pol. (H/V) | Cable Loss (dB) | Antenna Gain (dBi) | EIRP (dBm) | Limit (dBm) | Delta (dB) | Notes |
|---|---|---|---|---|---|---|---|---|
| Low Ch | | | | | | | | |
| 1851.50 | 15.30 | V | 0.9 | 9.2 | 23.60 | 33.0 | -9.4 | |
| 1851.50 | 15.85 | H | 0.9 | 9.2 | 24.15 | 33.0 | -8.9 | |
| Mid Ch | | | | | | | | |
| 1880.00 | 16.00 | V | 0.9 | 9.2 | 24.30 | 33.0 | -8.7 | |
| 1880.00 | 16.78 | H | 0.9 | 9.2 | 25.08 | 33.0 | -7.9 | |
| High Ch | | | | | | | | |
| 1908.50 | 15.40 | V | 0.9 | 9.1 | 23.60 | 33.0 | -9.4 | |
| 1908.50 | 16.30 | H | 0.9 | 9.1 | 24.50 | 33.0 | -8.5 | |


UL VERFICATION SERVICES FORM ID: FCC_22_24_27_90
47173 BENICIA STREET, FREMONT, CA 94538, USA TEL: (510) 771-1000 FAX: (510) 661-0888
*This report shall not be reproduced except in full, without the written approval of UL Verification Services Inc.*

Band

LTE2

3MHz

QPSK

**High Frequency Substitution Measurement**
**UL Verification Services, Inc.**

**Company:** LG
**Project #:** 15I20514
**Date:** 4/16/2015
**Test Engineer:** R.Z
**Configuration:** EUT Only
**Location:** Chamber G
**Mode:** LTE_QPSK Band 2 Fundamentals, 3MHz Bandwidth

**Test Equpment:**
**Receiving: Horn T711, and Chamber G SMA Cables**
**Substitution: Horn T59, 6ft SMA Cable**

| f MHz | SG reading (dBm) | Ant. Pol. (H/V) | Cable Loss (dB) | Antenna Gain (dBi) | EIRP (dBm) | Limit (dBm) | Delta (dB) | Notes |
|---|---|---|---|---|---|---|---|---|
| Low Ch | | | | | | | | |
| 1851.50 | 16.10 | V | 0.9 | 9.2 | 24.40 | 33.0 | -8.6 | |
| 1851.50 | 16.40 | H | 0.9 | 9.2 | 24.70 | 33.0 | -8.3 | |
| Mid Ch | | | | | | | | |
| 1880.00 | 16.80 | V | 0.9 | 9.2 | 25.10 | 33.0 | -7.9 | |
| 1880.00 | 17.39 | H | 0.9 | 9.2 | 25.69 | 33.0 | -7.3 | |
| High Ch | | | | | | | | |
| 1908.50 | 16.20 | V | 0.9 | 9.1 | 24.40 | 33.0 | -8.6 | |
| 1908.50 | 17.00 | H | 0.9 | 9.1 | 25.20 | 33.0 | -7.8 | |


*This report shall not be reproduced except in full, without the written approval of UL Verification Services Inc.*

Band

LTE2

1.4MHz

16QAM

**High Frequency Substitution Measurement**
**UL Verification Services, Inc.**

**Company:** LG
**Project #:** 15I20514
**Date:** 4/16/2015
**Test Engineer:** R.Z
**Configuration:** EUT Only
**Location:** Chamber G
**Mode:** LTE_16QAM Band 2 Fundamentals, 1.4MHz Bandwidth

**Test Equipment:**
**Receiving: Horn T711, and Chamber G SMA Cables**
**Substitution: Horn T59, 6ft SMA Cable**

| f MHz | SG reading (dBm) | Ant. Pol. (H/V) | Cable Loss (dB) | Antenna Gain (dBi) | EIRP (dBm) | Limit (dBm) | Delta (dB) | Notes |
|---|---|---|---|---|---|---|---|---|
| Low Ch | | | | | | | | |
| 1850.70 | 15.10 | V | 0.9 | 9.2 | 23.40 | 33.0 | -9.6 | -23.5 |
| 1850.70 | 15.40 | H | 0.9 | 9.2 | 23.70 | 33.0 | -9.3 | -22.8 |
| Mid Ch | | | | | | | | |
| 1880.00 | 15.70 | V | 0.9 | 9.2 | 24.00 | 33.0 | -9.0 | -23.7 |
| 1880.00 | 16.20 | H | 0.9 | 9.2 | 24.50 | 33.0 | -8.5 | -23.0 |
| High Ch | | | | | | | | |
| 1909.30 | 16.70 | V | 0.9 | 9.1 | 24.90 | 33.0 | -8.1 | -23.3 |
| 1909.30 | 16.90 | H | 0.9 | 9.1 | 25.10 | 33.0 | -7.9 | -22.6 |


UL VERFICATION SERVICES FORM ID: FCC_22_24_27_90
47173 BENICIA STREET, FREMONT, CA 94538, USA TEL: (510) 771-1000 FAX: (510) 661-0888
*This report shall not be reproduced except in full, without the written approval of UL Verification Services Inc.*

Band

LTE2

1.4MHz

QPSK

**High Frequency Substitution Measurement**
**UL Verification Services, Inc.**

**Company:** LG
**Project #:** 15I20514
**Date:** 4/16/2015
**Test Engineer:** R.Z
**Configuration:** EUT Only
**Location:** Chamber G
**Mode:** LTE_QPSK Band 2 Fundamentals, 1.4MHz Bandwidth

**Test Equpment:**
**Receiving: Horn T711, and Chamber G SMA Cables**
**Substitution: Horn T59, 6ft SMA Cable**

| f MHz | SG reading (dBm) | Ant. Pol. (H/V) | Cable Loss (dB) | Antenna Gain (dBi) | EIRP (dBm) | Limit (dBm) | Delta (dB) | Notes |
|---|---|---|---|---|---|---|---|---|
| Low Ch | | | | | | | | |
| 1850.70 | 15.96 | V | 0.9 | 9.2 | 24.30 | 33.0 | -8.7 | -22.6 |
| 1850.70 | 16.34 | H | 0.9 | 9.2 | 24.68 | 33.0 | -8.3 | -21.9 |
| Mid Ch | | | | | | | | |
| 1880.00 | 16.48 | V | 0.9 | 9.2 | 24.73 | 33.0 | -8.3 | -22.9 |
| 1880.00 | 17.03 | H | 0.9 | 9.2 | 25.28 | 33.0 | -7.7 | -22.2 |
| High Ch | | | | | | | | |
| 1909.30 | 17.40 | V | 0.9 | 9.1 | 25.57 | 33.0 | -7.4 | -22.6 |
| 1909.30 | 17.70 | H | 0.9 | 9.1 | 25.87 | 33.0 | -7.1 | -21.8 |


UL VERFICATION SERVICES FORM ID: FCC_22_24_27_90
47173 BENICIA STREET, FREMONT, CA 94538, USA TEL: (510) 771-1000 FAX: (510) 661-0888
*This report shall not be reproduced except in full, without the written approval of UL Verification Services Inc.*

## LTE Band 4

Band

LTE4

20MHz

16QAM

**High Frequency Substitution Measurement**
**UL Verification Services, Inc.**

**Company:** LG Electronics
**Project #:** 15I20514
**Date:** 4/15/2015
**Test Engineer:** R.Z
**Configuration:** EUT ONLY
**Location:** Chamber G
**Mode:** LTE_16QAM Band 4 Fundamentals, 20MHz Bandwidth

**Test Equpment:**
**Receiving: Horn T711, and Chamber G SMA Cables**
**Substitution: Horn T60, 6ft SMA Cable**

| f MHz | SG reading (dBm) | Ant. Pol. (H/V) | Cable Loss (dB) | Antenna Gain (dBi) | EIRP (dBm) | Limit (dBm) | Delta (dB) | Notes |
|---|---|---|---|---|---|---|---|---|
| Low Ch | | | | | | | | |
| 1720.00 | 12.40 | V | 0.9 | 8.2 | 19.72 | 30.0 | -10.3 | -25.3 |
| 1720.00 | 14.10 | H | 0.9 | 8.2 | 21.42 | 30.0 | -8.6 | -24.0 |
| Mid Ch | | | | | | | | |
| 1732.50 | 12.60 | V | 0.9 | 8.2 | 19.87 | 30.0 | -10.1 | -25.2 |
| 1732.50 | 13.50 | H | 0.9 | 8.2 | 20.77 | 30.0 | -9.2 | -23.9 |
| High Ch | | | | | | | | |
| 1745.00 | 12.10 | V | 0.9 | 8.1 | 19.33 | 30.0 | -10.7 | -25.6 |
| 1745.00 | 13.90 | H | 0.9 | 8.1 | 21.13 | 30.0 | -8.9 | -23.7 |


UL VERFICATION SERVICES FORM ID: FCC_22_24_27_90
47173 BENICIA STREET, FREMONT, CA 94538, USA TEL: (510) 771-1000 FAX: (510) 661-0888
*This report shall not be reproduced except in full, without the written approval of UL Verification Services Inc.*

Band

LTE4

20MHz

QPSK

**High Frequency Substitution Measurement**
**UL Verification Services, Inc.**

**Company:** LG Electronics
**Project #:** 15I20514
**Date:** 4/15/2015
**Test Engineer:** R.Z
**Configuration:** EUT ONLY
**Location:** Chamber G
**Mode:** LTE_QPSK Band 4 Fundamentals, 20MHz Bandwidth

**Test Equpment:**
**Receiving: Horn T711, and Chamber G SMA Cables**
**Substitution: Horn T60, 6ft SMA Cable**

| f MHz | SG reading (dBm) | Ant. Pol. (H/V) | Cable Loss (dB) | Antenna Gain (dBi) | EIRP (dBm) | Limit (dBm) | Delta (dB) | Notes |
|---|---|---|---|---|---|---|---|---|
| Low Ch | | | | | | | | |
| 1720.00 | 13.10 | V | 0.9 | 8.2 | 20.42 | 30.0 | -9.6 | -24.6 |
| 1720.00 | 14.80 | H | 0.9 | 8.2 | 22.12 | 30.0 | -7.9 | -23.3 |
| Mid Ch | | | | | | | | |
| 1732.50 | 13.30 | V | 0.9 | 8.2 | 20.57 | 30.0 | -9.4 | -24.5 |
| 1732.50 | 14.20 | H | 0.9 | 8.2 | 21.47 | 30.0 | -8.5 | -23.2 |
| High Ch | | | | | | | | |
| 1745.00 | 12.70 | V | 0.9 | 8.1 | 19.93 | 30.0 | -10.1 | -25.0 |
| 1745.00 | 14.60 | H | 0.9 | 8.1 | 21.83 | 30.0 | -8.2 | -23.0 |


UL VERFICATION SERVICES FORM ID: FCC_22_24_27_90
47173 BENICIA STREET, FREMONT, CA 94538, USA TEL: (510) 771-1000 FAX: (510) 661-0888
*This report shall not be reproduced except in full, without the written approval of UL Verification Services Inc.*

Band

LTE4

15MHz

16QAM

**High Frequency Substitution Measurement**
**UL Verification Services, Inc.**

**Company:** LG Electronics
**Project #:** 15I20514
**Date:** 4/15/2015
**Test Engineer:** R.Z
**Configuration:** EUT ONLY
**Location:** Chamber G
**Mode:** LTE_16QAM Band 4 Fundamentals, 15MHz Bandwidth

**Test Equpment:**
**Receiving: Horn T711, and Chamber G SMA Cables**
**Substitution: Horn T60, 6ft SMA Cable**

| f MHz | SG reading (dBm) | Ant. Pol. (H/V) | Cable Loss (dB) | Antenna Gain (dBi) | EIRP (dBm) | Limit (dBm) | Delta (dB) | Notes |
|---|---|---|---|---|---|---|---|---|
| Low Ch | | | | | | | | |
| 1717.50 | 12.50 | V | 0.9 | 8.2 | 19.83 | 30.0 | -10.2 | |
| 1717.50 | 14.20 | H | 0.9 | 8.2 | 21.53 | 30.0 | -8.5 | |
| Mid Ch | | | | | | | | |
| 1732.50 | 12.40 | V | 0.9 | 8.2 | 19.67 | 30.0 | -10.3 | |
| 1732.50 | 12.80 | H | 0.9 | 8.2 | 20.07 | 30.0 | -9.9 | |
| High Ch | | | | | | | | |
| 1747.50 | 12.10 | V | 0.9 | 8.1 | 19.32 | 30.0 | -10.7 | |
| 1747.50 | 13.10 | H | 0.9 | 8.1 | 20.32 | 30.0 | -9.7 | |


UL VERFICATION SERVICES FORM ID: FCC_22_24_27_90
47173 BENICIA STREET, FREMONT, CA 94538, USA TEL: (510) 771-1000 FAX: (510) 661-0888
*This report shall not be reproduced except in full, without the written approval of UL Verification Services Inc.*

Band

LTE4

15MHz

QPSK

**High Frequency Substitution Measurement**
**UL Verification Services, Inc.**

**Company:** LG Electronics
**Project #:** 15I20514
**Date:** 4/15/2015
**Test Engineer:** R.Z
**Configuration:** EUT ONLY
**Location:** Chamber G
**Mode:** LTE_QPSK Band 4 Fundamentals, 15MHz Bandwidth

**Test Equpment:**
**Receiving: Horn T711, and Chamber G SMA Cables**
**Substitution: Horn T60, 6ft SMA Cable**

| f MHz | SG reading (dBm) | Ant. Pol. (H/V) | Cable Loss (dB) | Antenna Gain (dBi) | EIRP (dBm) | Limit (dBm) | Delta (dB) | Notes |
|---|---|---|---|---|---|---|---|---|
| Low Ch | | | | | | | | |
| 1717.50 | 13.20 | V | 0.9 | 8.2 | 20.53 | 30.0 | -9.5 | |
| 1717.50 | 14.90 | H | 0.9 | 8.2 | 22.23 | 30.0 | -7.8 | |
| Mid Ch | | | | | | | | |
| 1732.50 | 13.10 | V | 0.9 | 8.2 | 20.37 | 30.0 | -9.6 | |
| 1732.50 | 13.40 | H | 0.9 | 8.2 | 20.67 | 30.0 | -9.3 | |
| High Ch | | | | | | | | |
| 1747.50 | 12.70 | V | 0.9 | 8.1 | 19.92 | 30.0 | -10.1 | |
| 1747.50 | 13.80 | H | 0.9 | 8.1 | 21.02 | 30.0 | -9.0 | |


UL VERFICATION SERVICES FORM ID: FCC_22_24_27_90
47173 BENICIA STREET, FREMONT, CA 94538, USA TEL: (510) 771-1000 FAX: (510) 661-0888
*This report shall not be reproduced except in full, without the written approval of UL Verification Services Inc.*

Band

LTE4

10MHz

16QAM

**High Frequency Substitution Measurement**
**UL Verification Services, Inc.**

**Company:** LG Electronics
**Project #:** 15I20514
**Date:** 4/15/2015
**Test Engineer:** R.Z
**Configuration:** EUT ONLY
**Location:** Chamber G
**Mode:** LTE_16QAM Band 4 Fundamentals, 10MHz Bandwidth

**Test Equpment:**
**Receiving: Horn T711, and Chamber G SMA Cables**
**Substitution: Horn T60, 6ft SMA Cable**

| f MHz | SG reading (dBm) | Ant. Pol. (H/V) | Cable Loss (dB) | Antenna Gain (dBi) | EIRP (dBm) | Limit (dBm) | Delta (dB) | Notes |
|---|---|---|---|---|---|---|---|---|
| Low Ch | | | | | | | | |
| 1715.00 | 12.50 | V | 0.9 | 8.2 | 19.84 | 30.0 | -10.2 | |
| 1715.00 | 14.10 | H | 0.9 | 8.2 | 21.44 | 30.0 | -8.6 | |
| Mid Ch | | | | | | | | |
| 1732.50 | 12.10 | V | 0.9 | 8.2 | 19.37 | 30.0 | -10.6 | |
| 1732.50 | 12.70 | H | 0.9 | 8.2 | 19.97 | 30.0 | -10.0 | |
| High Ch | | | | | | | | |
| 1750.00 | 12.20 | V | 0.9 | 8.1 | 19.41 | 30.0 | -10.6 | |
| 1750.00 | 13.20 | H | 0.9 | 8.1 | 20.41 | 30.0 | -9.6 | |


*This report shall not be reproduced except in full, without the written approval of UL Verification Services Inc.*

Band

LTE4

10MHz

QPSK

**High Frequency Substitution Measurement**
**UL Verification Services, Inc.**

**Company:** LG Electronics
**Project #:** 15I20514
**Date:** 4/15/2015
**Test Engineer:** R.Z
**Configuration:** EUT ONLY
**Location:** Chamber G
**Mode:** LTE_QPSK Band 4 Fundamentals, 10MHz Bandwidth

**Test Equpment:**
**Receiving: Horn T711, and Chamber G SMA Cables**
**Substitution: Horn T60, 6ft SMA Cable**

| f MHz | SG reading (dBm) | Ant. Pol. (H/V) | Cable Loss (dB) | Antenna Gain (dBi) | EIRP (dBm) | Limit (dBm) | Delta (dB) | Notes |
|---|---|---|---|---|---|---|---|---|
| Low Ch | | | | | | | | |
| 1715.00 | 13.20 | V | 0.9 | 8.2 | 20.54 | 30.0 | -9.5 | |
| 1715.00 | 14.80 | H | 0.9 | 8.2 | 22.14 | 30.0 | -7.9 | |
| Mid Ch | | | | | | | | |
| 1732.50 | 12.80 | V | 0.9 | 8.2 | 20.07 | 30.0 | -9.9 | |
| 1732.50 | 13.30 | H | 0.9 | 8.2 | 20.57 | 30.0 | -9.4 | |
| High Ch | | | | | | | | |
| 1750.00 | 12.90 | V | 0.9 | 8.1 | 20.11 | 30.0 | -9.9 | |
| 1750.00 | 13.90 | H | 0.9 | 8.1 | 21.11 | 30.0 | -8.9 | |


*This report shall not be reproduced except in full, without the written approval of UL Verification Services Inc.*

Band

LTE4

5MHz

16QAM

**High Frequency Substitution Measurement**
**UL Verification Services, Inc.**

**Company:** LG Electronics
**Project #:** 15I20514
**Date:** 4/15/2015
**Test Engineer:** R.Z
**Configuration:** EUT ONLY
**Location:** Chamber G
**Mode:** LTE_16QAM Band 4 Fundamentals, 5MHz Bandwidth

**Test Equpment:**
**Receiving: Horn T711, and Chamber G SMA Cables**
**Substitution: Horn T60, 6ft SMA Cable**

| f MHz | SG reading (dBm) | Ant. Pol. (H/V) | Cable Loss (dB) | Antenna Gain (dBi) | EIRP (dBm) | Limit (dBm) | Delta (dB) | Notes |
|---|---|---|---|---|---|---|---|---|
| Low Ch | | | | | | | | |
| 1712.50 | 12.60 | V | 0.9 | 8.2 | 19.94 | 30.0 | -10.1 | |
| 1712.50 | 14.20 | H | 0.9 | 8.2 | 21.54 | 30.0 | -8.5 | |
| Mid Ch | | | | | | | | |
| 1732.50 | 12.20 | V | 0.9 | 8.2 | 19.47 | 30.0 | -10.5 | |
| 1732.50 | 12.80 | H | 0.9 | 8.2 | 20.07 | 30.0 | -9.9 | |
| High Ch | | | | | | | | |
| 1752.50 | 12.10 | V | 0.9 | 8.1 | 19.30 | 30.0 | -10.7 | |
| 1752.50 | 13.30 | H | 0.9 | 8.1 | 20.50 | 30.0 | -9.5 | |


UL VERFICATION SERVICES FORM ID: FCC_22_24_27_90
47173 BENICIA STREET, FREMONT, CA 94538, USA TEL: (510) 771-1000 FAX: (510) 661-0888
*This report shall not be reproduced except in full, without the written approval of UL Verification Services Inc.*

Band

LTE4

5MHz

QPSK

**High Frequency Substitution Measurement**
**UL Verification Services, Inc.**

**Company:** LG Electronics
**Project #:** 15I20514
**Date:** 4/15/2015
**Test Engineer:** R.Z
**Configuration:** EUT ONLY
**Location:** Chamber G
**Mode:** LTE_QPSK Band 4 Fundamentals, 5MHz Bandwidth

**Test Equpment:**
**Receiving: Horn T711, and Chamber G SMA Cables**
**Substitution: Horn T60, 6ft SMA Cable**

| f MHz | SG reading (dBm) | Ant. Pol. (H/V) | Cable Loss (dB) | Antenna Gain (dBi) | EIRP (dBm) | Limit (dBm) | Delta (dB) | Notes |
|---|---|---|---|---|---|---|---|---|
| Low Ch | | | | | | | | |
| 1712.50 | 13.30 | V | 0.9 | 8.2 | 20.64 | 30.0 | -9.4 | |
| 1712.50 | 14.90 | H | 0.9 | 8.2 | 22.24 | 30.0 | -7.8 | |
| Mid Ch | | | | | | | | |
| 1732.50 | 12.90 | V | 0.9 | 8.2 | 20.17 | 30.0 | -9.8 | |
| 1732.50 | 13.50 | H | 0.9 | 8.2 | 20.77 | 30.0 | -9.2 | |
| High Ch | | | | | | | | |
| 1752.50 | 12.70 | V | 0.9 | 8.1 | 19.90 | 30.0 | -10.1 | |
| 1752.50 | 13.90 | H | 0.9 | 8.1 | 21.10 | 30.0 | -8.9 | |


*This report shall not be reproduced except in full, without the written approval of UL Verification Services Inc.*

Band

LTE4

3MHz

16QAM

**High Frequency Substitution Measurement**
**UL Verification Services, Inc.**

**Company:** LG Electronics
**Project #:** 15I20514
**Date:** 4/15/2015
**Test Engineer:** R.Z
**Configuration:** EUT ONLY
**Location:** Chamber G
**Mode:** LTE_16QAM Band 4 Fundamentals, 3MHz Bandwidth

**Test Equpment:**
**Receiving: Horn T711, and Chamber G SMA Cables**
**Substitution: Horn T60, 6ft SMA Cable**

| f MHz | SG reading (dBm) | Ant. Pol. (H/V) | Cable Loss (dB) | Antenna Gain (dBi) | EIRP (dBm) | Limit (dBm) | Delta (dB) | Notes |
|---|---|---|---|---|---|---|---|---|
| Low Ch | | | | | | | | |
| 1711.50 | 12.20 | V | 0.9 | 8.2 | 19.55 | 30.0 | -10.5 | 7.0 |
| 1711.50 | 14.20 | H | 0.9 | 8.2 | 21.55 | 30.0 | -8.5 | -23.9 |
| Mid Ch | | | | | | | | |
| 1732.50 | 12.20 | V | 0.9 | 8.2 | 19.47 | 30.0 | -10.5 | -25.6 |
| 1732.50 | 13.80 | H | 0.9 | 8.2 | 21.07 | 30.0 | -8.9 | -23.6 |
| High Ch | | | | | | | | |
| 1753.50 | 11.90 | V | 0.9 | 8.1 | 19.09 | 30.0 | -10.9 | -25.8 |
| 1753.50 | 13.10 | H | 0.9 | 8.1 | 20.29 | 30.0 | -9.7 | -24.5 |


UL VERFICATION SERVICES FORM ID: FCC_22_24_27_90
47173 BENICIA STREET, FREMONT, CA 94538, USA TEL: (510) 771-1000 FAX: (510) 661-0888
*This report shall not be reproduced except in full, without the written approval of UL Verification Services Inc.*

Band

LTE4

3MHz

QPSK

**High Frequency Substitution Measurement**
**UL Verification Services, Inc.**

**Company:** LG Electronics
**Project #:** 15I20514
**Date:** 4/15/2015
**Test Engineer:** R.Z
**Configuration:** EUT ONLY
**Location:** Chamber G
**Mode:** LTE_QPSK Band 4 Fundamentals, 3MHz Bandwidth

**Test Equpment:**
**Receiving: Horn T711, and Chamber G SMA Cables**
**Substitution: Horn T60, 6ft SMA Cable**

| f MHz | SG reading (dBm) | Ant. Pol. (H/V) | Cable Loss (dB) | Antenna Gain (dBi) | EIRP (dBm) | Limit (dBm) | Delta (dB) | Notes |
|---|---|---|---|---|---|---|---|---|
| Low Ch | | | | | | | | |
| 1711.50 | 12.90 | V | 0.9 | 8.2 | 20.25 | 30.0 | -9.8 | |
| 1711.50 | 14.90 | H | 0.9 | 8.2 | 22.25 | 30.0 | -7.8 | |
| Mid Ch | | | | | | | | |
| 1732.50 | 12.80 | V | 0.9 | 8.2 | 20.07 | 30.0 | -9.9 | |
| 1732.50 | 14.40 | H | 0.9 | 8.2 | 21.67 | 30.0 | -8.3 | |
| High Ch | | | | | | | | |
| 1753.50 | 12.30 | V | 0.9 | 8.1 | 19.49 | 30.0 | -10.5 | |
| 1753.50 | 13.80 | H | 0.9 | 8.1 | 20.99 | 30.0 | -9.0 | |


UL VERFICATION SERVICES FORM ID: FCC_22_24_27_90
47173 BENICIA STREET, FREMONT, CA 94538, USA TEL: (510) 771-1000 FAX: (510) 661-0888
*This report shall not be reproduced except in full, without the written approval of UL Verification Services Inc.*

Band

LTE4

1.4MHz

16QAM

**High Frequency Substitution Measurement**
**UL Verification Services, Inc.**

**Company:** LG Electronics
**Project #:** 15I20514
**Date:** 4/15/2015
**Test Engineer:** R.Z
**Configuration:** EUT ONLY
**Location:** Chamber G
**Mode:** LTE_16QAM Band 4 Fundamentals, 1.4MHz Bandwidth

**Test Equipment:**
**Receiving: Horn T711, and Chamber G SMA Cables**
**Substitution: Horn T60, 6ft SMA Cable**

| f MHz | SG reading (dBm) | Ant. Pol. (H/V) | Cable Loss (dB) | Antenna Gain (dBi) | EIRP (dBm) | Limit (dBm) | Delta (dB) | Notes |
|---|---|---|---|---|---|---|---|---|
| Low Ch | | | | | | | | |
| 1710.70 | 11.40 | V | 0.9 | 8.3 | 18.75 | 30.0 | -11.2 | |
| 1710.70 | 14.10 | H | 0.9 | 8.3 | 21.45 | 30.0 | -8.5 | |
| Mid Ch | | | | | | | | |
| 1732.50 | 11.80 | V | 0.9 | 8.2 | 19.07 | 30.0 | -10.9 | |
| 1732.50 | 13.80 | H | 0.9 | 8.2 | 21.07 | 30.0 | -8.9 | |
| High Ch | | | | | | | | |
| 1754.30 | 11.30 | V | 0.9 | 8.1 | 18.49 | 30.0 | -11.5 | |
| 1754.30 | 13.80 | H | 0.9 | 8.1 | 20.99 | 30.0 | -9.0 | |


*This report shall not be reproduced except in full, without the written approval of UL Verification Services Inc.*

Band

LTE4

1.4MHz

QPSK

**High Frequency Substitution Measurement**
**UL Verification Services, Inc.**

**Company:** LG Electronics
**Project #:** 15I20514
**Date:** 4/15/2015
**Test Engineer:** R.Z
**Configuration:** EUT ONLY
**Location:** Chamber G
**Mode:** LTE_QPSK Band 4 Fundamentals, 1.4MHz Bandwidth

**Test Equpment:**
**Receiving: Horn T711, and Chamber G SMA Cables**
**Substitution: Horn T60, 6ft SMA Cable**

| f MHz | SG reading (dBm) | Ant. Pol. (H/V) | Cable Loss (dB) | Antenna Gain (dBi) | EIRP (dBm) | Limit (dBm) | Delta (dB) | Notes |
|---|---|---|---|---|---|---|---|---|
| Low Ch | | | | | | | | |
| 1710.70 | 12.10 | V | 0.9 | 8.3 | 19.45 | 30.0 | -10.5 | |
| 1710.70 | 14.95 | H | 0.9 | 8.3 | 22.30 | 30.0 | -7.7 | |
| Mid Ch | | | | | | | | |
| 1732.50 | 12.28 | V | 0.9 | 8.2 | 19.55 | 30.0 | -10.4 | |
| 1732.50 | 14.75 | H | 0.9 | 8.2 | 22.02 | 30.0 | -8.0 | |
| High Ch | | | | | | | | |
| 1754.30 | 12.02 | V | 0.9 | 8.1 | 19.21 | 30.0 | -10.8 | |
| 1754.30 | 14.60 | H | 0.9 | 8.1 | 21.79 | 30.0 | -8.2 | |


*This report shall not be reproduced except in full, without the written approval of UL Verification Services Inc.*

## LTE Band 5

Band

LTE5

10MHz

16QAM

**High Frequency Substitution Measurement**
**UL Verification Services, Inc.**

**Company:** LG Electronics
**Project #:** 15I20514
**Date:** 4/24/2015
**Test Engineer:** Angel Escamilla
**Configuration:** X-pos EUT
**Location:** Chamber C
**Mode:** LTE_16QAM Band 5 Fundamentals, 10MHz Bandwidth

**Test Equpment:**
**Receiving: Hybrid T185, and Chamber C SMA Cables**
**Substitution: Dipole T416, 6ft SMA Cable Warehouse**

| f MHz | SG reading (dBm) | Ant. Pol. (H/V) | Cable Loss (dB) | Antenna Gain (dBd) | ERP (dBm) | Limit (dBm) | Delta (dB) | Notes |
|---|---|---|---|---|---|---|---|---|
| Low Ch | | | | | | | | |
| 829.00 | 12.03 | V | 0.9 | 0.0 | 11.13 | 38.5 | -27.4 | |
| 829.00 | 20.20 | H | 0.9 | 0.0 | 19.30 | 38.5 | -19.2 | |
| Mid Ch | | | | | | | | |
| 836.50 | 12.56 | V | 0.9 | 0.0 | 11.66 | 38.5 | -26.8 | |
| 836.50 | 20.91 | H | 0.9 | 0.0 | 20.01 | 38.5 | -18.5 | |
| High Ch | | | | | | | | |
| 844.00 | 13.01 | V | 0.9 | 0.0 | 12.11 | 38.5 | -26.4 | |
| 844.00 | 20.34 | H | 0.9 | 0.0 | 19.44 | 38.5 | -19.1 | |


*This report shall not be reproduced except in full, without the written approval of UL Verification Services Inc.*

Band

LTE5

10MHz

QPSK

**High Frequency Substitution Measurement**
**UL Verification Services, Inc.**

**Company:** LG Electronics
**Project #:** 15I20514
**Date:** 4/24/2015
**Test Engineer:** Angel Escamilla
**Configuration:** X-pos EUT
**Location:** Chamber C
**Mode:** LTE_QPSK Band 5 Fundamentals, 10MHz Bandwidth

**Test Equpment:**
**Receiving: Hybrid T185, and Chamber C SMA Cables**
**Substitution: Dipole T416, 6ft SMA Cable Warehouse**

| f MHz | SG reading (dBm) | Ant. Pol. (H/V) | Cable Loss (dB) | Antenna Gain (dBd) | ERP (dBm) | Limit (dBm) | Delta (dB) | Notes |
|---|---|---|---|---|---|---|---|---|
| Low Ch | | | | | | | | |
| 829.00 | 13.32 | V | 0.9 | 0.0 | 12.42 | 38.5 | -26.1 | |
| 829.00 | 21.45 | H | 0.9 | 0.0 | 20.55 | 38.5 | -18.0 | |
| Mid Ch | | | | | | | | |
| 836.50 | 12.94 | V | 0.9 | 0.0 | 12.04 | 38.5 | -26.5 | |
| 836.50 | 21.14 | H | 0.9 | 0.0 | 20.24 | 38.5 | -18.3 | |
| High Ch | | | | | | | | |
| 844.00 | 13.66 | V | 0.9 | 0.0 | 12.76 | 38.5 | -25.7 | |
| 844.00 | 21.06 | H | 0.9 | 0.0 | 20.16 | 38.5 | -18.3 | |


UL VERFICATION SERVICES FORM ID: FCC_22_24_27_90
47173 BENICIA STREET, FREMONT, CA 94538, USA TEL: (510) 771-1000 FAX: (510) 661-0888
*This report shall not be reproduced except in full, without the written approval of UL Verification Services Inc.*

Band

LTE5

5MHz

16QAM

**High Frequency Substitution Measurement**
**UL Verification Services, Inc.**

**Company:** LG Electronics
**Project #:** 15I20514
**Date:** 4/24/2015
**Test Engineer:** Angel Escamilla
**Configuration:** X-pos EUT
**Location:** Chamber C
**Mode:** LTE_16QAM Band 5 Fundamentals, 5MHz Bandwidth

**Test Equpment:**
**Receiving: Hybrid T185, and Chamber C SMA Cables**
**Substitution: Dipole T416, 6ft SMA Cable Warehouse**

| f MHz | SG reading (dBm) | Ant. Pol. (H/V) | Cable Loss (dB) | Antenna Gain (dBd) | ERP (dBm) | Limit (dBm) | Delta (dB) | Notes |
|---|---|---|---|---|---|---|---|---|
| Low Ch | | | | | | | | |
| 826.50 | 11.14 | V | 0.9 | 0.0 | 10.24 | 38.5 | -28.3 | |
| 826.50 | 20.52 | H | 0.9 | 0.0 | 19.62 | 38.5 | -18.9 | |
| Mid Ch | | | | | | | | |
| 836.50 | 11.96 | V | 0.9 | 0.0 | 11.06 | 38.5 | -27.4 | |
| 836.50 | 20.03 | H | 0.9 | 0.0 | 19.13 | 38.5 | -19.4 | |
| High Ch | | | | | | | | |
| 846.50 | 13.26 | V | 0.9 | 0.0 | 12.36 | 38.5 | -26.1 | |
| 846.50 | 20.21 | H | 0.9 | 0.0 | 19.31 | 38.5 | -19.2 | |


UL VERFICATION SERVICES FORM ID: FCC_22_24_27_90
47173 BENICIA STREET, FREMONT, CA 94538, USA TEL: (510) 771-1000 FAX: (510) 661-0888
*This report shall not be reproduced except in full, without the written approval of UL Verification Services Inc.*

Band

LTE5

5MHz

QPSK

**High Frequency Substitution Measurement**
**UL Verification Services, Inc.**

**Company:** LG Electronics
**Project #:** 15I20514
**Date:** 4/24/2015
**Test Engineer:** Angel Escamilla
**Configuration:** X-pos EUT
**Location:** Chamber C
**Mode:** LTE_QPSK Band 5 Fundamentals, 5MHz Bandwidth

**Test Equpment:**
**Receiving: Hybrid T185, and Chamber C SMA Cables**
**Substitution: Dipole T416, 6ft SMA Cable Warehouse**

| f MHz | SG reading (dBm) | Ant. Pol. (H/V) | Cable Loss (dB) | Antenna Gain (dBd) | ERP (dBm) | Limit (dBm) | Delta (dB) | Notes |
|---|---|---|---|---|---|---|---|---|
| Low Ch | | | | | | | | |
| 826.50 | 11.82 | V | 0.9 | 0.0 | 10.92 | 38.5 | -27.6 | |
| 826.50 | 21.35 | H | 0.9 | 0.0 | 20.45 | 38.5 | -18.1 | |
| Mid Ch | | | | | | | | |
| 836.50 | 13.24 | V | 0.9 | 0.0 | 12.34 | 38.5 | -26.2 | |
| 836.50 | 21.11 | H | 0.9 | 0.0 | 20.21 | 38.5 | -18.3 | |
| High Ch | | | | | | | | |
| 846.50 | 13.59 | V | 0.9 | 0.0 | 12.69 | 38.5 | -25.8 | |
| 846.50 | 20.73 | H | 0.9 | 0.0 | 19.83 | 38.5 | -18.7 | |


*This report shall not be reproduced except in full, without the written approval of UL Verification Services Inc.*

Band

LTE5

3MHz

16QAM

**High Frequency Substitution Measurement**
**UL Verification Services, Inc.**

**Company:** LG Electronics
**Project #:** 15I20514
**Date:** 4/24/2015
**Test Engineer:** Angel Escamilla
**Configuration:** X-pos EUT
**Location:** Chamber C
**Mode:** LTE_16QAM Band 5 Fundamentals, 3MHz Bandwidth

**Test Equpment:**
**Receiving: Hybrid T185, and Chamber C SMA Cables**
**Substitution: Dipole T416, 6ft SMA Cable Warehouse**

| f MHz | SG reading (dBm) | Ant. Pol. (H/V) | Cable Loss (dB) | Antenna Gain (dBd) | ERP (dBm) | Limit (dBm) | Delta (dB) | Notes |
|---|---|---|---|---|---|---|---|---|
| Low Ch | | | | | | | | |
| 825.50 | 11.42 | V | 0.9 | 0.0 | 10.52 | 38.5 | -28.0 | |
| 825.50 | 20.61 | H | 0.9 | 0.0 | 19.71 | 38.5 | -18.8 | |
| Mid Ch | | | | | | | | |
| 836.50 | 12.41 | V | 0.9 | 0.0 | 11.51 | 38.5 | -27.0 | |
| 836.50 | 20.34 | H | 0.9 | 0.0 | 19.44 | 38.5 | -19.1 | |
| High Ch | | | | | | | | |
| 847.50 | 12.50 | V | 0.9 | 0.0 | 11.60 | 38.5 | -26.9 | |
| 847.50 | 20.20 | H | 0.9 | 0.0 | 19.30 | 38.5 | -19.2 | |


UL VERFICATION SERVICES FORM ID: FCC_22_24_27_90
47173 BENICIA STREET, FREMONT, CA 94538, USA TEL: (510) 771-1000 FAX: (510) 661-0888
*This report shall not be reproduced except in full, without the written approval of UL Verification Services Inc.*

Band

LTE5

3MHz

QPSK

**High Frequency Substitution Measurement**
**UL Verification Services, Inc.**

**Company:** LG Electronics
**Project #:** 15I20514
**Date:** 4/24/2015
**Test Engineer:** Angel Escamilla
**Configuration:** X-pos EUT
**Location:** Chamber C
**Mode:** LTE_QPSK Band 5 Fundamentals, 3MHz Bandwidth

**Test Equpment:**
**Receiving: Hybrid T185, and Chamber C SMA Cables**
**Substitution: Dipole T416, 6ft SMA Cable Warehouse**

| f MHz | SG reading (dBm) | Ant. Pol. (H/V) | Cable Loss (dB) | Antenna Gain (dBd) | ERP (dBm) | Limit (dBm) | Delta (dB) | Notes |
|---|---|---|---|---|---|---|---|---|
| Low Ch | | | | | | | | |
| 825.50 | 12.07 | V | 0.9 | 0.0 | 11.17 | 38.5 | -27.3 | |
| 825.50 | 21.56 | H | 0.9 | 0.0 | 20.66 | 38.5 | -17.8 | |
| Mid Ch | | | | | | | | |
| 836.50 | 13.22 | V | 0.9 | 0.0 | 12.32 | 38.5 | -26.2 | |
| 836.50 | 21.10 | H | 0.9 | 0.0 | 20.20 | 38.5 | -18.3 | |
| High Ch | | | | | | | | |
| 847.50 | 13.54 | V | 0.9 | 0.0 | 12.64 | 38.5 | -25.9 | |
| 847.50 | 21.03 | H | 0.9 | 0.0 | 20.13 | 38.5 | -18.4 | |


*This report shall not be reproduced except in full, without the written approval of UL Verification Services Inc.*

Band

LTE5

1.4MHz

16QAM

**High Frequency Substitution Measurement**
**UL Verification Services, Inc.**

**Company:** LG Electronics
**Project #:** 15I20514
**Date:** 4/24/2015
**Test Engineer:** Angel Escamilla
**Configuration:** X-pos EUT
**Location:** Chamber C
**Mode:** LTE_16QAM Band 5 Fundamentals, 1.4MHz Bandwidth

**Test Equpment:**
**Receiving: Hybrid T185, and Chamber C SMA Cables**
**Substitution: Dipole T416, 6ft SMA Cable Warehouse**

| f MHz | SG reading (dBm) | Ant. Pol. (H/V) | Cable Loss (dB) | Antenna Gain (dBd) | ERP (dBm) | Limit (dBm) | Delta (dB) | Notes |
|---|---|---|---|---|---|---|---|---|
| Low Ch | | | | | | | | |
| 824.70 | 10.80 | V | 0.9 | 0.0 | 9.90 | 38.5 | -28.6 | |
| 824.70 | 20.01 | H | 0.9 | 0.0 | 19.11 | 38.5 | -19.4 | |
| Mid Ch | | | | | | | | |
| 836.50 | 9.33 | V | 0.9 | 0.0 | 8.43 | 38.5 | -30.1 | |
| 836.50 | 20.62 | H | 0.9 | 0.0 | 19.72 | 38.5 | -18.8 | |
| High Ch | | | | | | | | |
| 848.30 | 11.43 | V | 0.9 | 0.0 | 10.53 | 38.5 | -28.0 | |
| 848.30 | 18.75 | H | 0.9 | 0.0 | 17.85 | 38.5 | -20.7 | |


*This report shall not be reproduced except in full, without the written approval of UL Verification Services Inc.*

Band

LTE5

1.4MHz

QPSK

**High Frequency Substitution Measurement**
**UL Verification Services, Inc.**

**Company:** LG Electronics
**Project #:** 15I20514
**Date:** 4/24/2015
**Test Engineer:** Angel Escamilla
**Configuration:** X-pos EUT
**Location:** Chamber C
**Mode:** LTE_QPSK Band 5 Fundamentals, 1.4MHz Bandwidth

**Test Equpment:**
**Receiving: Hybrid T185, and Chamber C SMA Cables**
**Substitution: Dipole T416, 6ft SMA Cable Warehouse**

| f MHz | SG reading (dBm) | Ant. Pol. (H/V) | Cable Loss (dB) | Antenna Gain (dBd) | ERP (dBm) | Limit (dBm) | Delta (dB) | Notes |
|---|---|---|---|---|---|---|---|---|
| Low Ch | | | | | | | | |
| 824.70 | 12.13 | V | 0.9 | 0.0 | 11.23 | 38.5 | -27.3 | |
| 824.70 | 20.81 | H | 0.9 | 0.0 | 19.91 | 38.5 | -18.6 | |
| Mid Ch | | | | | | | | |
| 836.50 | 11.29 | V | 0.9 | 0.0 | 10.39 | 38.5 | -28.1 | |
| 836.50 | 22.20 | H | 0.9 | 0.0 | 21.30 | 38.5 | -17.2 | |
| High Ch | | | | | | | | |
| 848.30 | 12.98 | V | 0.9 | 0.0 | 12.08 | 38.5 | -26.4 | |
| 848.30 | 21.76 | H | 0.9 | 0.0 | 20.86 | 38.5 | -17.6 | |


*This report shall not be reproduced except in full, without the written approval of UL Verification Services Inc.*

## LTE Band 12

Band

LTE12

10MHz

16QAM

**High Frequency Substitution Measurement**
**UL Verification Services, Inc.**

**Company:** LG Electronics
**Project #:** 15I20514
**Date:** 4/24/2015
**Test Engineer:** Angel Escamilla
**Configuration:** X-pos EUT
**Location:** Chamber C
**Mode:** LTE_16QAM Band 12 Fundamentals, 10MHz Bandwidth

**Test Equpment:**
**Receiving: Hybrid T185, and Chamber C SMA Cables**
**Substitution: Dipole T416, 6ft SMA Cable Warehouse**

| f MHz | SG reading (dBm) | Ant. Pol. (H/V) | Cable Loss (dB) | Antenna Gain (dBd) | ERP (dBm) | Limit (dBm) | Delta (dB) | Notes |
|---|---|---|---|---|---|---|---|---|
| Low Ch | | | | | | | | |
| 704.00 | 5.58 | V | 0.9 | 0.0 | 4.68 | 38.5 | -33.8 | |
| 704.00 | 16.40 | H | 0.9 | 0.0 | 15.50 | 38.5 | -23.0 | |
| Mid Ch | | | | | | | | |
| 707.50 | 6.52 | V | 0.9 | 0.0 | 5.62 | 38.5 | -32.9 | |
| 707.50 | 16.37 | H | 0.9 | 0.0 | 15.47 | 38.5 | -23.0 | |
| High Ch | | | | | | | | |
| 711.00 | 6.09 | V | 0.9 | 0.0 | 5.19 | 38.5 | -33.3 | |
| 711.00 | 16.24 | H | 0.9 | 0.0 | 15.34 | 38.5 | -23.2 | |


*This report shall not be reproduced except in full, without the written approval of UL Verification Services Inc.*

Band

LTE12

10MHz

QPSK

**High Frequency Substitution Measurement**
**UL Verification Services, Inc.**

**Company:** LG Electronics
**Project #:** 15I20514
**Date:** 4/24/2015
**Test Engineer:** Angel Escamilla
**Configuration:** X-pos EUT
**Location:** Chamber C
**Mode:** LTE_QPSK Band 12 Fundamentals, 10MHz Bandwidth

**Test Equpment:**
**Receiving: Hybrid T185, and Chamber C SMA Cables**
**Substitution: Dipole T416, 6ft SMA Cable Warehouse**

| f MHz | SG reading (dBm) | Ant. Pol. (H/V) | Cable Loss (dB) | Antenna Gain (dBd) | ERP (dBm) | Limit (dBm) | Delta (dB) | Notes |
|---|---|---|---|---|---|---|---|---|
| Low Ch | | | | | | | | |
| 704.00 | 7.52 | V | 0.9 | 0.0 | 6.62 | 38.5 | -31.9 | |
| 704.00 | 17.02 | H | 0.9 | 0.0 | 16.12 | 38.5 | -22.4 | |
| Mid Ch | | | | | | | | |
| 707.50 | 7.65 | V | 0.9 | 0.0 | 6.75 | 38.5 | -31.8 | |
| 707.50 | 16.48 | H | 0.9 | 0.0 | 15.58 | 38.5 | -22.9 | |
| High Ch | | | | | | | | |
| 711.00 | 8.31 | V | 0.9 | 0.0 | 7.41 | 38.5 | -31.1 | |
| 711.00 | 17.58 | H | 0.9 | 0.0 | 16.68 | 38.5 | -21.8 | |


*This report shall not be reproduced except in full, without the written approval of UL Verification Services Inc.*

Band

LTE12

5MHz

16QAM

**High Frequency Substitution Measurement**
**UL Verification Services, Inc.**

**Company:** LG Electronics
**Project #:** 15I20514
**Date:** 4/24/2015
**Test Engineer:** Angel Escamilla
**Configuration:** X-pos EUT
**Location:** Chamber C
**Mode:** LTE_16QAM Band 12 Fundamentals, 5MHz Bandwidth

**Test Equpment:**
**Receiving: Hybrid T185, and Chamber C SMA Cables**
**Substitution: Dipole T416, 6ft SMA Cable Warehouse**

| f MHz | SG reading (dBm) | Ant. Pol. (H/V) | Cable Loss (dB) | Antenna Gain (dBd) | ERP (dBm) | Limit (dBm) | Delta (dB) | Notes |
|---|---|---|---|---|---|---|---|---|
| Low Ch | | | | | | | | |
| 701.50 | 6.97 | V | 0.9 | 0.0 | 6.07 | 34.8 | -28.7 | |
| 701.50 | 15.88 | H | 0.9 | 0.0 | 14.98 | 34.8 | -19.8 | |
| Mid Ch | | | | | | | | |
| 707.50 | 6.83 | V | 0.9 | 0.0 | 5.93 | 34.8 | -28.8 | |
| 707.50 | 15.55 | H | 0.9 | 0.0 | 14.65 | 34.8 | -20.1 | |
| High Ch | | | | | | | | |
| 713.50 | 7.41 | V | 0.9 | 0.0 | 6.51 | 34.8 | -28.3 | |
| 713.50 | 15.96 | H | 0.9 | 0.0 | 15.06 | 34.8 | -19.7 | |


UL VERFICATION SERVICES FORM ID: FCC_22_24_27_90
47173 BENICIA STREET, FREMONT, CA 94538, USA TEL: (510) 771-1000 FAX: (510) 661-0888
*This report shall not be reproduced except in full, without the written approval of UL Verification Services Inc.*

Band

LTE12

5MHz

QPSK

**High Frequency Substitution Measurement**
**UL Verification Services, Inc.**

**Company:** LG Electronics
**Project #:** 15I20514
**Date:** 4/24/2015
**Test Engineer:** Angel Escamilla
**Configuration:** X-pos EUT
**Location:** Chamber C
**Mode:** LTE_QPSK Band 12 Fundamentals, 5MHz Bandwidth

**Test Equpment:**
**Receiving: Hybrid T185, and Chamber C SMA Cables**
**Substitution: Dipole T416, 6ft SMA Cable Warehouse**

| f MHz | SG reading (dBm) | Ant. Pol. (H/V) | Cable Loss (dB) | Antenna Gain (dBd) | ERP (dBm) | Limit (dBm) | Delta (dB) | Notes |
|---|---|---|---|---|---|---|---|---|
| Low Ch | | | | | | | | |
| 701.50 | 8.04 | V | 0.9 | 0.0 | 7.14 | 34.8 | -27.6 | |
| 701.50 | 16.77 | H | 0.9 | 0.0 | 15.87 | 34.8 | -18.9 | |
| Mid Ch | | | | | | | | |
| 707.50 | 7.73 | V | 0.9 | 0.0 | 6.83 | 34.8 | -27.9 | |
| 707.50 | 16.35 | H | 0.9 | 0.0 | 15.45 | 34.8 | -19.3 | |
| High Ch | | | | | | | | |
| 713.50 | 8.56 | V | 0.9 | 0.0 | 7.66 | 34.8 | -27.1 | |
| 713.50 | 17.03 | H | 0.9 | 0.0 | 16.13 | 34.8 | -18.6 | |


UL VERFICATION SERVICES FORM ID: FCC_22_24_27_90
47173 BENICIA STREET, FREMONT, CA 94538, USA TEL: (510) 771-1000 FAX: (510) 661-0888
*This report shall not be reproduced except in full, without the written approval of UL Verification Services Inc.*

Band

LTE12

3MHz

16QAM

**High Frequency Substitution Measurement**
**UL Verification Services, Inc.**

**Company:** LG Electronics
**Project #:** 15I20514
**Date:** 4/24/2015
**Test Engineer:** Angel Escamilla
**Configuration:** X-pos EUT
**Location:** Chamber C
**Mode:** LTE_16QAM Band 12 Fundamentals, 3MHz Bandwidth

**Test Equpment:**
**Receiving: Hybrid T185, and Chamber C SMA Cables**
**Substitution: Dipole T416, 6ft SMA Cable Warehouse**

| f MHz | SG reading (dBm) | Ant. Pol. (H/V) | Cable Loss (dB) | Antenna Gain (dBd) | ERP (dBm) | Limit (dBm) | Delta (dB) | Notes |
|---|---|---|---|---|---|---|---|---|
| Low Ch | | | | | | | | |
| 700.50 | 6.80 | V | 0.9 | 0.0 | 5.90 | 38.5 | -32.6 | |
| 700.50 | 15.75 | H | 0.9 | 0.0 | 14.85 | 38.5 | -23.7 | |
| Mid Ch | | | | | | | | |
| 707.50 | 6.57 | V | 0.9 | 0.0 | 5.67 | 38.5 | -32.8 | |
| 707.50 | 14.60 | H | 0.9 | 0.0 | 13.70 | 38.5 | -24.8 | |
| High Ch | | | | | | | | |
| 714.50 | 6.57 | V | 0.9 | 0.0 | 5.67 | 38.5 | -32.8 | |
| 714.50 | 15.77 | H | 0.9 | 0.0 | 14.87 | 38.5 | -23.6 | |


*This report shall not be reproduced except in full, without the written approval of UL Verification Services Inc.*

Band

LTE12

3MHz

QPSK

**High Frequency Substitution Measurement**
**UL Verification Services, Inc.**

**Company:** LG Electronics
**Project #:** 15I20514
**Date:** 4/24/2015
**Test Engineer:** Angel Escamilla
**Configuration:** X-pos EUT
**Location:** Chamber C
**Mode:** LTE_QPSK Band 12 Fundamentals, 3MHz Bandwidth

**Test Equpment:**
**Receiving: Hybrid T185, and Chamber C SMA Cables**
**Substitution: Dipole T416, 6ft SMA Cable Warehouse**

| f MHz | SG reading (dBm) | Ant. Pol. (H/V) | Cable Loss (dB) | Antenna Gain (dBd) | ERP (dBm) | Limit (dBm) | Delta (dB) | Notes |
|---|---|---|---|---|---|---|---|---|
| Low Ch | | | | | | | | |
| 700.50 | 7.85 | V | 0.9 | 0.0 | 6.95 | 38.5 | -31.6 | |
| 700.50 | 16.22 | H | 0.9 | 0.0 | 15.32 | 38.5 | -23.2 | |
| Mid Ch | | | | | | | | |
| 707.50 | 7.41 | V | 0.9 | 0.0 | 6.51 | 38.5 | -32.0 | |
| 707.50 | 15.28 | H | 0.9 | 0.0 | 14.38 | 38.5 | -24.1 | |
| High Ch | | | | | | | | |
| 714.50 | 6.85 | V | 0.9 | 0.0 | 5.95 | 38.5 | -32.6 | |
| 714.50 | 16.50 | H | 0.9 | 0.0 | 15.60 | 38.5 | -22.9 | |


*This report shall not be reproduced except in full, without the written approval of UL Verification Services Inc.*

Band

LTE12

1.4MHz

16QAM

**High Frequency Substitution Measurement**
**UL Verification Services, Inc.**

**Company:** LG Electronics
**Project #:** 15I20514
**Date:** 4/24/2015
**Test Engineer:** Angel Escamilla
**Configuration:** X-pos EUT
**Location:** Chamber C
**Mode:** LTE_16QAM Band 12 Fundamentals, 1.4MHz Bandwidth

**Test Equpment:**
**Receiving: Hybrid T185, and Chamber C SMA Cables**
**Substitution: Dipole T416, 6ft SMA Cable Warehouse**

| f MHz | SG reading (dBm) | Ant. Pol. (H/V) | Cable Loss (dB) | Antenna Gain (dBd) | ERP (dBm) | Limit (dBm) | Delta (dB) | Notes |
|---|---|---|---|---|---|---|---|---|
| Low Ch | | | | | | | | |
| 699.70 | 6.00 | V | 0.9 | 0.0 | 5.10 | 34.8 | -29.7 | |
| 699.70 | 14.60 | H | 0.9 | 0.0 | 13.70 | 34.8 | -21.1 | |
| Mid Ch | | | | | | | | |
| 707.50 | 6.24 | V | 0.9 | 0.0 | 5.34 | 34.8 | -29.4 | |
| 707.50 | 14.97 | H | 0.9 | 0.0 | 14.07 | 34.8 | -20.7 | |
| High Ch | | | | | | | | |
| 715.30 | 6.61 | V | 0.9 | 0.0 | 5.71 | 34.8 | -29.1 | |
| 715.30 | 15.63 | H | 0.9 | 0.0 | 14.73 | 34.8 | -20.0 | |


UL VERFICATION SERVICES FORM ID: FCC_22_24_27_90
47173 BENICIA STREET, FREMONT, CA 94538, USA TEL: (510) 771-1000 FAX: (510) 661-0888
*This report shall not be reproduced except in full, without the written approval of UL Verification Services Inc.*

Band

LTE12

1.4MHz

QPSK

**High Frequency Substitution Measurement**
**UL Verification Services, Inc.**

**Company:** LG Electronics
**Project #:** 15I20514
**Date:** 4/24/2015
**Test Engineer:** Angel Escamilla
**Configuration:** X-pos EUT
**Location:** Chamber C
**Mode:** LTE_QPSK Band 12 Fundamentals, 1.4MHz Bandwidth

**Test Equpment:**
**Receiving: Hybrid T185, and Chamber C SMA Cables**
**Substitution: Dipole T416, 6ft SMA Cable Warehouse**

| f MHz | SG reading (dBm) | Ant. Pol. (H/V) | Cable Loss (dB) | Antenna Gain (dBd) | ERP (dBm) | Limit (dBm) | Delta (dB) | Notes |
|---|---|---|---|---|---|---|---|---|
| Low Ch | | | | | | | | |
| 699.70 | 7.14 | V | 0.9 | 0.0 | 6.24 | 34.8 | -28.5 | |
| 699.70 | 15.66 | H | 0.9 | 0.0 | 14.76 | 34.8 | -20.0 | |
| Mid Ch | | | | | | | | |
| 707.50 | 6.93 | V | 0.9 | 0.0 | 6.03 | 34.8 | -28.7 | |
| 707.50 | 15.59 | H | 0.9 | 0.0 | 14.69 | 34.8 | -20.1 | |
| High Ch | | | | | | | | |
| 715.30 | 7.20 | V | 0.9 | 0.0 | 6.30 | 34.8 | -28.5 | |
| 715.30 | 16.18 | H | 0.9 | 0.0 | 15.28 | 34.8 | -19.5 | |


UL VERFICATION SERVICES FORM ID: FCC_22_24_27_90
47173 BENICIA STREET, FREMONT, CA 94538, USA TEL: (510) 771-1000 FAX: (510) 661-0888
*This report shall not be reproduced except in full, without the written approval of UL Verification Services Inc.*

## LTE Band 25

Band

LTE25

20MHz

16QAM

**High Frequency Substitution Measurement**
**UL Verification Services, Inc.**

**Company:** LG
**Project #:** 15I20514
**Date:** 4/16/2015
**Test Engineer:** R.Z
**Configuration:** EUT Only
**Location:** Chamber G
**Mode:** LTE_16QAM Band 25 Fundamentals, 20MHz Bandwidth

**Test Equpment:**
**Receiving: Horn T711, and Chamber G SMA Cables**
**Substitution: Horn T59, 6ft SMA Cable**

| f MHz | SG reading (dBm) | Ant. Pol. (H/V) | Cable Loss (dB) | Antenna Gain (dBi) | EIRP (dBm) | Limit (dBm) | Delta (dB) | Notes |
|---|---|---|---|---|---|---|---|---|
| Low Ch | | | | | | | | |
| 1860.00 | 14.70 | V | 0.9 | 9.2 | 23.00 | 33.0 | -10.0 | |
| 1860.00 | 16.10 | H | 0.9 | 9.2 | 24.40 | 33.0 | -8.6 | |
| Mid Ch | | | | | | | | |
| 1882.50 | 14.52 | V | 0.9 | 9.2 | 22.82 | 33.0 | -10.2 | |
| 1882.50 | 16.20 | H | 0.9 | 9.2 | 24.50 | 33.0 | -8.5 | |
| High Ch | | | | | | | | |
| 1905.00 | 15.20 | V | 0.9 | 9.1 | 23.40 | 33.0 | -9.6 | |
| 1905.00 | 16.58 | H | 0.9 | 9.1 | 24.78 | 33.0 | -8.2 | |


*This report shall not be reproduced except in full, without the written approval of UL Verification Services Inc.*

Band

LTE25

20MHz

QPSK

**High Frequency Substitution Measurement**
**UL Verification Services, Inc.**

**Company:** LG
**Project #:** 15I20514
**Date:** 4/16/2015
**Test Engineer:** R.Z
**Configuration:** EUT Only
**Location:** Chamber G
**Mode:** LTE_QPSK Band 25 Fundamentals, 20MHz Bandwidth

**Test Equipment:**
**Receiving: Horn T711, and Chamber G SMA Cables**
**Substitution: Horn T59, 6ft SMA Cable**

| f MHz | SG reading (dBm) | Ant. Pol. (H/V) | Cable Loss (dB) | Antenna Gain (dBi) | EIRP (dBm) | Limit (dBm) | Delta (dB) | Notes |
|---|---|---|---|---|---|---|---|---|
| Low Ch | | | | | | | | |
| 1860.00 | 15.40 | V | 0.9 | 9.2 | 23.70 | 33.0 | -9.3 | |
| 1860.00 | 16.77 | H | 0.9 | 9.2 | 25.07 | 33.0 | -7.9 | |
| Mid Ch | | | | | | | | |
| 1882.50 | 15.10 | V | 0.9 | 9.2 | 23.40 | 33.0 | -9.6 | |
| 1882.50 | 16.80 | H | 0.9 | 9.2 | 25.10 | 33.0 | -7.9 | |
| High Ch | | | | | | | | |
| 1905.00 | 15.90 | V | 0.9 | 9.1 | 24.10 | 33.0 | -8.9 | |
| 1905.00 | 17.20 | H | 0.9 | 9.1 | 25.40 | 33.0 | -7.6 | |


*This report shall not be reproduced except in full, without the written approval of UL Verification Services Inc.*

Band

LTE25

15MHz

16QAM

**High Frequency Substitution Measurement**
**UL Verification Services, Inc.**

**Company:** LG
**Project #:** 15I20514
**Date:** 4/16/2015
**Test Engineer:** R.Z
**Configuration:** EUT Only
**Location:** Chamber G
**Mode:** LTE_16QAM Band 25 Fundamentals, 15MHz Bandwidth

**Test Equpment:**
**Receiving: Horn T711, and Chamber G SMA Cables**
**Substitution: Horn T59, 6ft SMA Cable**

| f MHz | SG reading (dBm) | Ant. Pol. (H/V) | Cable Loss (dB) | Antenna Gain (dBi) | EIRP (dBm) | Limit (dBm) | Delta (dB) | Notes |
|---|---|---|---|---|---|---|---|---|
| Low Ch | | | | | | | | |
| 1857.50 | 15.20 | V | 0.9 | 9.2 | 23.50 | 33.0 | -9.5 | |
| 1857.50 | 15.85 | H | 0.9 | 9.2 | 24.15 | 33.0 | -8.9 | |
| Mid Ch | | | | | | | | |
| 1882.50 | 15.70 | V | 0.9 | 9.2 | 24.00 | 33.0 | -9.0 | |
| 1882.50 | 16.10 | H | 0.9 | 9.2 | 24.40 | 33.0 | -8.6 | |
| High Ch | | | | | | | | |
| 1907.50 | 16.40 | V | 0.9 | 9.1 | 24.60 | 33.0 | -8.4 | |
| 1907.50 | 16.50 | H | 0.9 | 9.1 | 24.70 | 33.0 | -8.3 | |


UL VERFICATION SERVICES FORM ID: FCC_22_24_27_90
47173 BENICIA STREET, FREMONT, CA 94538, USA TEL: (510) 771-1000 FAX: (510) 661-0888
*This report shall not be reproduced except in full, without the written approval of UL Verification Services Inc.*

Band

LTE25

15MHz

QPSK

**High Frequency Substitution Measurement**
**UL Verification Services, Inc.**

**Company:** LG
**Project #:** 15I20514
**Date:** 4/16/2015
**Test Engineer:** R.Z
**Configuration:** EUT Only
**Location:** Chamber G
**Mode:** LTE_QPSK Band 25 Fundamentals, 15MHz Bandwidth

**Test Equpment:**
**Receiving: Horn T711, and Chamber G SMA Cables**
**Substitution: Horn T59, 6ft SMA Cable**

| f MHz | SG reading (dBm) | Ant. Pol. (H/V) | Cable Loss (dB) | Antenna Gain (dBi) | EIRP (dBm) | Limit (dBm) | Delta (dB) | Notes |
|---|---|---|---|---|---|---|---|---|
| Low Ch | | | | | | | | |
| 1857.50 | 15.90 | V | 0.9 | 9.2 | 24.20 | 33.0 | -8.8 | |
| 1857.50 | 16.50 | H | 0.9 | 9.2 | 24.80 | 33.0 | -8.2 | |
| Mid Ch | | | | | | | | |
| 1882.50 | 16.40 | V | 0.9 | 9.2 | 24.70 | 33.0 | -8.3 | |
| 1882.50 | 16.60 | H | 0.9 | 9.2 | 24.90 | 33.0 | -8.1 | |
| High Ch | | | | | | | | |
| 1907.50 | 17.10 | V | 0.9 | 9.1 | 25.30 | 33.0 | -7.7 | |
| 1907.50 | 17.10 | H | 0.9 | 9.1 | 25.30 | 33.0 | -7.7 | |


UL VERFICATION SERVICES FORM ID: FCC_22_24_27_90
47173 BENICIA STREET, FREMONT, CA 94538, USA TEL: (510) 771-1000 FAX: (510) 661-0888
*This report shall not be reproduced except in full, without the written approval of UL Verification Services Inc.*

Band

LTE25

10MHz

16QAM

**High Frequency Substitution Measurement**
**UL Verification Services, Inc.**

**Company:** LG
**Project #:** 15I20514
**Date:** 4/16/2015
**Test Engineer:** R.Z
**Configuration:** EUT Only
**Location:** Chamber G
**Mode:** LTE_16QAM Band 25 Fundamentals, 10MHz Bandwidth

**Test Equpment:**
**Receiving: Horn T711, and Chamber G SMA Cables**
**Substitution: Horn T59, 6ft SMA Cable**

| f MHz | SG reading (dBm) | Ant. Pol. (H/V) | Cable Loss (dB) | Antenna Gain (dBi) | EIRP (dBm) | Limit (dBm) | Delta (dB) | Notes |
|---|---|---|---|---|---|---|---|---|
| Low Ch | | | | | | | | |
| 1855.00 | 15.70 | V | 0.9 | 9.2 | 24.00 | 33.0 | -9.0 | |
| 1855.00 | 15.60 | H | 0.9 | 9.2 | 23.90 | 33.0 | -9.1 | |
| Mid Ch | | | | | | | | |
| 1882.50 | 15.50 | V | 0.9 | 9.2 | 23.80 | 33.0 | -9.2 | |
| 1882.50 | 16.40 | H | 0.9 | 9.2 | 24.70 | 33.0 | -8.3 | |
| High Ch | | | | | | | | |
| 1910.00 | 15.80 | V | 0.9 | 9.1 | 24.00 | 33.0 | -9.0 | |
| 1910.00 | 16.20 | H | 0.9 | 9.1 | 24.40 | 33.0 | -8.6 | |


UL VERFICATION SERVICES FORM ID: FCC_22_24_27_90
47173 BENICIA STREET, FREMONT, CA 94538, USA TEL: (510) 771-1000 FAX: (510) 661-0888
*This report shall not be reproduced except in full, without the written approval of UL Verification Services Inc.*

Band

LTE25

10MHz

QPSK

**High Frequency Substitution Measurement**
**UL Verification Services, Inc.**

**Company:** LG
**Project #:** 15I20514
**Date:** 4/16/2015
**Test Engineer:** R.Z
**Configuration:** EUT Only
**Location:** Chamber G
**Mode:** LTE_QPSK Band 25 Fundamentals, 10MHz Bandwidth

**Test Equipment:**
**Receiving: Horn T711, and Chamber G SMA Cables**
**Substitution: Horn T59, 6ft SMA Cable**

| f MHz | SG reading (dBm) | Ant. Pol. (H/V) | Cable Loss (dB) | Antenna Gain (dBi) | EIRP (dBm) | Limit (dBm) | Delta (dB) | Notes |
|---|---|---|---|---|---|---|---|---|
| Low Ch | | | | | | | | |
| 1855.00 | 16.40 | V | 0.9 | 9.2 | 24.70 | 33.0 | -8.3 | |
| 1855.00 | 16.42 | H | 0.9 | 9.2 | 24.72 | 33.0 | -8.3 | |
| Mid Ch | | | | | | | | |
| 1882.50 | 16.20 | V | 0.9 | 9.2 | 24.50 | 33.0 | -8.5 | |
| 1882.50 | 17.00 | H | 0.9 | 9.2 | 25.30 | 33.0 | -7.7 | |
| High Ch | | | | | | | | |
| 1910.00 | 16.50 | V | 0.9 | 9.1 | 24.70 | 33.0 | -8.3 | |
| 1910.00 | 16.90 | H | 0.9 | 9.1 | 25.10 | 33.0 | -7.9 | |


*This report shall not be reproduced except in full, without the written approval of UL Verification Services Inc.*

Band

LTE25

5MHz

16QAM

**High Frequency Substitution Measurement**
**UL Verification Services, Inc.**

**Company:** LG
**Project #:** 15I20514
**Date:** 4/16/2015
**Test Engineer:** R.Z
**Configuration:** EUT Only
**Location:** Chamber G
**Mode:** LTE_16QAM Band 25 Fundamentals, 5MHz Bandwidth

**Test Equpment:**
**Receiving: Horn T711, and Chamber G SMA Cables**
**Substitution: Horn T59, 6ft SMA Cable**

| f MHz | SG reading (dBm) | Ant. Pol. (H/V) | Cable Loss (dB) | Antenna Gain (dBi) | EIRP (dBm) | Limit (dBm) | Delta (dB) | Notes |
|---|---|---|---|---|---|---|---|---|
| Low Ch | | | | | | | | |
| 1852.50 | 15.16 | V | 0.9 | 9.2 | 23.46 | 33.0 | -9.5 | |
| 1852.50 | 15.60 | H | 0.9 | 9.2 | 23.90 | 33.0 | -9.1 | |
| Mid Ch | | | | | | | | |
| 1882.50 | 15.80 | V | 0.9 | 9.2 | 24.10 | 33.0 | -8.9 | |
| 1882.50 | 16.50 | H | 0.9 | 9.2 | 24.80 | 33.0 | -8.2 | |
| High Ch | | | | | | | | |
| 1912.50 | 16.00 | V | 0.9 | 9.1 | 24.20 | 33.0 | -8.8 | |
| 1912.50 | 16.20 | H | 0.9 | 9.1 | 24.40 | 33.0 | -8.6 | |


UL VERFICATION SERVICES FORM ID: FCC_22_24_27_90
47173 BENICIA STREET, FREMONT, CA 94538, USA TEL: (510) 771-1000 FAX: (510) 661-0888
*This report shall not be reproduced except in full, without the written approval of UL Verification Services Inc.*

Band

LTE25

5MHz

QPSK

**High Frequency Substitution Measurement**
**UL Verification Services, Inc.**

**Company:** LG
**Project #:** 15I20514
**Date:** 4/16/2015
**Test Engineer:** R.Z
**Configuration:** EUT Only
**Location:** Chamber G
**Mode:** LTE_QPSK Band 25 Fundamentals, 5MHz Bandwidth

**Test Equpment:**
**Receiving: Horn T711, and Chamber G SMA Cables**
**Substitution: Horn T59, 6ft SMA Cable**

| f MHz | SG reading (dBm) | Ant. Pol. (H/V) | Cable Loss (dB) | Antenna Gain (dBi) | EIRP (dBm) | Limit (dBm) | Delta (dB) | Notes |
|---|---|---|---|---|---|---|---|---|
| Low Ch | | | | | | | | |
| 1852.50 | 15.86 | V | 0.9 | 9.2 | 24.16 | 33.0 | -8.8 | |
| 1852.50 | 16.30 | H | 0.9 | 9.2 | 24.60 | 33.0 | -8.4 | |
| Mid Ch | | | | | | | | |
| 1882.50 | 16.60 | V | 0.9 | 9.2 | 24.90 | 33.0 | -8.1 | |
| 1882.50 | 17.20 | H | 0.9 | 9.2 | 25.50 | 33.0 | -7.5 | |
| High Ch | | | | | | | | |
| 1912.50 | 16.60 | V | 0.9 | 9.1 | 24.80 | 33.0 | -8.2 | |
| 1912.50 | 16.90 | H | 0.9 | 9.1 | 25.10 | 33.0 | -7.9 | |


UL VERFICATION SERVICES FORM ID: FCC_22_24_27_90
47173 BENICIA STREET, FREMONT, CA 94538, USA TEL: (510) 771-1000 FAX: (510) 661-0888
*This report shall not be reproduced except in full, without the written approval of UL Verification Services Inc.*

Band

LTE25

3MHz

16QAM

**High Frequency Substitution Measurement**
**UL Verification Services, Inc.**

**Company:** LG
**Project #:** 15I20514
**Date:** 4/16/2015
**Test Engineer:** R.Z
**Configuration:** EUT Only
**Location:** Chamber G
**Mode:** LTE_16QAM Band 25 Fundamentals, 3MHz Bandwidth

**Test Equpment:**
**Receiving: Horn T711, and Chamber G SMA Cables**
**Substitution: Horn T59, 6ft SMA Cable**

| f MHz | SG reading (dBm) | Ant. Pol. (H/V) | Cable Loss (dB) | Antenna Gain (dBi) | EIRP (dBm) | Limit (dBm) | Delta (dB) | Notes |
|---|---|---|---|---|---|---|---|---|
| Low Ch | | | | | | | | |
| 1851.50 | 15.30 | V | 0.9 | 9.2 | 23.60 | 33.0 | -9.4 | |
| 1851.50 | 15.85 | H | 0.9 | 9.2 | 24.15 | 33.0 | -8.9 | |
| Mid Ch | | | | | | | | |
| 1882.50 | 16.00 | V | 0.9 | 9.2 | 24.30 | 33.0 | -8.7 | |
| 1882.50 | 16.78 | H | 0.9 | 9.2 | 25.08 | 33.0 | -7.9 | |
| High Ch | | | | | | | | |
| 1913.50 | 15.40 | V | 0.9 | 9.1 | 23.60 | 33.0 | -9.4 | |
| 1913.50 | 16.30 | H | 0.9 | 9.1 | 24.50 | 33.0 | -8.5 | |


UL VERFICATION SERVICES FORM ID: FCC_22_24_27_90
47173 BENICIA STREET, FREMONT, CA 94538, USA TEL: (510) 771-1000 FAX: (510) 661-0888
*This report shall not be reproduced except in full, without the written approval of UL Verification Services Inc.*

Band

LTE25

3MHz

QPSK

**High Frequency Substitution Measurement**
**UL Verification Services, Inc.**

**Company:** LG
**Project #:** 15I20514
**Date:** 4/16/2015
**Test Engineer:** R.Z
**Configuration:** EUT Only
**Location:** Chamber G
**Mode:** LTE_QPSK Band 25 Fundamentals, 3MHz Bandwidth

**Test Equpment:**
**Receiving: Horn T711, and Chamber G SMA Cables**
**Substitution: Horn T59, 6ft SMA Cable**

| f MHz | SG reading (dBm) | Ant. Pol. (H/V) | Cable Loss (dB) | Antenna Gain (dBi) | EIRP (dBm) | Limit (dBm) | Delta (dB) | Notes |
|---|---|---|---|---|---|---|---|---|
| Low Ch | | | | | | | | |
| 1851.50 | 16.10 | V | 0.9 | 9.2 | 24.40 | 33.0 | -8.6 | |
| 1851.50 | 16.40 | H | 0.9 | 9.2 | 24.70 | 33.0 | -8.3 | |
| Mid Ch | | | | | | | | |
| 1882.50 | 16.80 | V | 0.9 | 9.2 | 25.10 | 33.0 | -7.9 | |
| 1882.50 | 17.39 | H | 0.9 | 9.2 | 25.69 | 33.0 | -7.3 | |
| High Ch | | | | | | | | |
| 1913.50 | 16.20 | V | 0.9 | 9.1 | 24.40 | 33.0 | -8.6 | |
| 1913.50 | 17.00 | H | 0.9 | 9.1 | 25.20 | 33.0 | -7.8 | |


*This report shall not be reproduced except in full, without the written approval of UL Verification Services Inc.*

Band

LTE25

1.4MHz

16QAM

**High Frequency Substitution Measurement**
**UL Verification Services, Inc.**

**Company:** LG
**Project #:** 15I20514
**Date:** 4/16/2015
**Test Engineer:** R.Z
**Configuration:** EUT Only
**Location:** Chamber G
**Mode:** LTE_16QAM Band 25 Fundamentals, 1.4MHz Bandwidth

**Test Equpment:**
**Receiving: Horn T711, and Chamber G SMA Cables**
**Substitution: Horn T59, 6ft SMA Cable**

| f MHz | SG reading (dBm) | Ant. Pol. (H/V) | Cable Loss (dB) | Antenna Gain (dBi) | EIRP (dBm) | Limit (dBm) | Delta (dB) | Notes |
|---|---|---|---|---|---|---|---|---|
| Low Ch | | | | | | | | |
| 1850.70 | 15.10 | V | 0.9 | 9.2 | 23.40 | 33.0 | -9.6 | -23.5 |
| 1850.70 | 15.40 | H | 0.9 | 9.2 | 23.70 | 33.0 | -9.3 | -22.8 |
| Mid Ch | | | | | | | | |
| 1882.50 | 15.70 | V | 0.9 | 9.2 | 24.00 | 33.0 | -9.0 | -23.7 |
| 1882.50 | 16.20 | H | 0.9 | 9.2 | 24.50 | 33.0 | -8.5 | -23.0 |
| High Ch | | | | | | | | |
| 1914.30 | 16.70 | V | 0.9 | 9.1 | 24.90 | 33.0 | -8.1 | -23.3 |
| 1914.30 | 16.90 | H | 0.9 | 9.1 | 25.10 | 33.0 | -7.9 | -22.6 |


UL VERFICATION SERVICES FORM ID: FCC_22_24_27_90
47173 BENICIA STREET, FREMONT, CA 94538, USA TEL: (510) 771-1000 FAX: (510) 661-0888
*This report shall not be reproduced except in full, without the written approval of UL Verification Services Inc.*

Band

LTE25

1.4MHz

QPSK

**High Frequency Substitution Measurement**
**UL Verification Services, Inc.**

**Company:** LG
**Project #:** 15I20514
**Date:** 4/16/2015
**Test Engineer:** R.Z
**Configuration:** EUT Only
**Location:** Chamber G
**Mode:** LTE_QPSK Band 25 Fundamentals, 1.4MHz Bandwidth

**Test Equpment:**
**Receiving: Horn T711, and Chamber G SMA Cables**
**Substitution: Horn T59, 6ft SMA Cable**

| f MHz | SG reading (dBm) | Ant. Pol. (H/V) | Cable Loss (dB) | Antenna Gain (dBi) | EIRP (dBm) | Limit (dBm) | Delta (dB) | Notes |
|---|---|---|---|---|---|---|---|---|
| Low Ch | | | | | | | | |
| 1850.70 | 15.96 | V | 0.9 | 9.2 | 24.30 | 33.0 | -8.7 | -22.6 |
| 1850.70 | 16.34 | H | 0.9 | 9.2 | 24.68 | 33.0 | -8.3 | -21.9 |
| Mid Ch | | | | | | | | |
| 1882.50 | 16.48 | V | 0.9 | 9.2 | 24.73 | 33.0 | -8.3 | -22.9 |
| 1882.50 | 17.03 | H | 0.9 | 9.2 | 25.28 | 33.0 | -7.7 | -22.2 |
| High Ch | | | | | | | | |
| 1914.30 | 17.40 | V | 0.9 | 9.1 | 25.57 | 33.0 | -7.4 | -22.6 |
| 1914.30 | 17.70 | H | 0.9 | 9.1 | 25.87 | 33.0 | -7.1 | -21.8 |


UL VERFICATION SERVICES FORM ID: FCC_22_24_27_90
47173 BENICIA STREET, FREMONT, CA 94538, USA TEL: (510) 771-1000 FAX: (510) 661-0888
*This report shall not be reproduced except in full, without the written approval of UL Verification Services Inc.*

## LTE Band 26

Band

LTE26

15MHz

16QAM

**High Frequency Substitution Measurement**
**UL Verification Services, Inc.**

**Company:** LG Electronics
**Project #:** 15I20514
**Date:** 4/24/2015
**Test Engineer:** Angel Escamilla
**Configuration:** X-pos EUT
**Location:** Chamber C
**Mode:** LTE_16QAM Band 26 Fundamentals, 15MHz Bandwidth

**Test Equpment:**
**Receiving: Hybrid T185, and Chamber C SMA Cables**
**Substitution: Dipole T416, 6ft SMA Cable Warehouse**

| f MHz | SG reading (dBm) | Ant. Pol. (H/V) | Cable Loss (dB) | Antenna Gain (dBd) | ERP (dBm) | Limit (dBm) | Delta (dB) | Notes |
|---|---|---|---|---|---|---|---|---|
| Low Ch | | | | | | | | |
| 831.50 | 11.35 | V | 0.9 | 0.0 | 10.45 | 38.5 | -28.1 | |
| 831.50 | 20.21 | H | 0.9 | 0.0 | 19.31 | 38.5 | -19.2 | |
| Mid Ch | | | | | | | | |
| 836.50 | 12.69 | V | 0.9 | 0.0 | 11.79 | 38.5 | -26.7 | |
| 836.50 | 19.87 | H | 0.9 | 0.0 | 18.97 | 38.5 | -19.5 | |
| High Ch | | | | | | | | |
| 841.50 | 12.68 | V | 0.9 | 0.0 | 11.78 | 38.5 | -26.7 | |
| 841.50 | 20.37 | H | 0.9 | 0.0 | 19.47 | 38.5 | -19.0 | |


UL VERFICATION SERVICES FORM ID: FCC_22_24_27_90
47173 BENICIA STREET, FREMONT, CA 94538, USA TEL: (510) 771-1000 FAX: (510) 661-0888
*This report shall not be reproduced except in full, without the written approval of UL Verification Services Inc.*

Band

LTE26

15MHz

QPSK

**High Frequency Substitution Measurement**
**UL Verification Services, Inc.**

**Company:** LG Electronics
**Project #:** 15I20514
**Date:** 4/24/2015
**Test Engineer:** Angel Escamilla
**Configuration:** X-pos EUT
**Location:** Chamber C
**Mode:** LTE_QPSK Band 26 Fundamentals, 15MHz Bandwidth

**Test Equipment:**
**Receiving: Hybrid T185, and Chamber C SMA Cables**
**Substitution: Dipole T416, 6ft SMA Cable Warehouse**

| f MHz | SG reading (dBm) | Ant. Pol. (H/V) | Cable Loss (dB) | Antenna Gain (dBd) | ERP (dBm) | Limit (dBm) | Delta (dB) | Notes |
|---|---|---|---|---|---|---|---|---|
| Low Ch | | | | | | | | |
| 831.50 | 12.03 | V | 0.9 | 0.0 | 11.13 | 50.0 | -38.9 | |
| 831.50 | 21.09 | H | 0.9 | 0.0 | 20.19 | 50.0 | -29.8 | |
| Mid Ch | | | | | | | | |
| 836.50 | 13.36 | V | 0.9 | 0.0 | 12.46 | 38.5 | -26.0 | |
| 836.50 | 20.59 | H | 0.9 | 0.0 | 19.69 | 38.5 | -18.8 | |
| High Ch | | | | | | | | |
| 841.50 | 13.91 | V | 0.9 | 0.0 | 13.01 | 38.5 | -25.5 | |
| 841.50 | 21.44 | H | 0.9 | 0.0 | 20.54 | 38.5 | -18.0 | |


UL VERFICATION SERVICES FORM ID: FCC_22_24_27_90
47173 BENICIA STREET, FREMONT, CA 94538, USA TEL: (510) 771-1000 FAX: (510) 661-0888
*This report shall not be reproduced except in full, without the written approval of UL Verification Services Inc.*

Band

LTE26

10MHz

16QAM

**High Frequency Substitution Measurement**
**UL Verification Services, Inc.**

**Company:** LG Electronics
**Project #:** 15I20514
**Date:** 4/24/2015
**Test Engineer:** Angel Escamilla
**Configuration:** X-pos EUT
**Location:** Chamber C
**Mode:** LTE_16QAM Band 26 Fundamentals, 10MHz Bandwidth

**Test Equpment:**
**Receiving: Hybrid T185, and Chamber C SMA Cables**
**Substitution: Dipole T416, 6ft SMA Cable Warehouse**

| f MHz | SG reading (dBm) | Ant. Pol. (H/V) | Cable Loss (dB) | Antenna Gain (dBd) | ERP (dBm) | Limit (dBm) | Delta (dB) | Notes |
|---|---|---|---|---|---|---|---|---|
| Low Ch | | | | | | | | |
| 819.00 | 12.03 | V | 0.9 | 0.0 | 11.13 | 50.0 | -38.9 | |
| 819.00 | 20.20 | H | 0.9 | 0.0 | 19.30 | 50.0 | -30.7 | |
| Mid Ch | | | | | | | | |
| 831.50 | 12.56 | V | 0.9 | 0.0 | 11.66 | 38.5 | -26.8 | |
| 831.50 | 20.91 | H | 0.9 | 0.0 | 20.01 | 38.5 | -18.5 | |
| High Ch | | | | | | | | |
| 844.00 | 13.01 | V | 0.9 | 0.0 | 12.11 | 38.5 | -26.4 | |
| 844.00 | 20.34 | H | 0.9 | 0.0 | 19.44 | 38.5 | -19.1 | |


UL VERFICATION SERVICES FORM ID: FCC_22_24_27_90
47173 BENICIA STREET, FREMONT, CA 94538, USA TEL: (510) 771-1000 FAX: (510) 661-0888
*This report shall not be reproduced except in full, without the written approval of UL Verification Services Inc.*

Band

LTE26

10MHz

QPSK

**High Frequency Substitution Measurement**
**UL Verification Services, Inc.**

**Company:** LG Electronics
**Project #:** 15I20514
**Date:** 4/24/2015
**Test Engineer:** Angel Escamilla
**Configuration:** X-pos EUT
**Location:** Chamber C
**Mode:** LTE_QPSK Band 26 Fundamentals, 10MHz Bandwidth

**Test Equpment:**
**Receiving: Hybrid T185, and Chamber C SMA Cables**
**Substitution: Dipole T416, 6ft SMA Cable Warehouse**

| f MHz | SG reading (dBm) | Ant. Pol. (H/V) | Cable Loss (dB) | Antenna Gain (dBd) | ERP (dBm) | Limit (dBm) | Delta (dB) | Notes |
|---|---|---|---|---|---|---|---|---|
| Low Ch | | | | | | | | |
| 819.00 | 13.32 | V | 0.9 | 0.0 | 12.42 | 50.0 | -37.6 | |
| 819.00 | 21.45 | H | 0.9 | 0.0 | 20.55 | 50.0 | -29.5 | |
| Mid Ch | | | | | | | | |
| 831.50 | 12.94 | V | 0.9 | 0.0 | 12.04 | 38.5 | -26.5 | |
| 831.50 | 21.14 | H | 0.9 | 0.0 | 20.24 | 38.5 | -18.3 | |
| High Ch | | | | | | | | |
| 844.00 | 13.66 | V | 0.9 | 0.0 | 12.76 | 38.5 | -25.7 | |
| 844.00 | 21.06 | H | 0.9 | 0.0 | 20.16 | 38.5 | -18.3 | |


UL VERFICATION SERVICES FORM ID: FCC_22_24_27_90
47173 BENICIA STREET, FREMONT, CA 94538, USA TEL: (510) 771-1000 FAX: (510) 661-0888
*This report shall not be reproduced except in full, without the written approval of UL Verification Services Inc.*

Band

LTE26

5MHz

16QAM

**High Frequency Substitution Measurement**
**UL Verification Services, Inc.**

**Company:** LG Electronics
**Project #:** 15I20514
**Date:** 4/24/2015
**Test Engineer:** Angel Escamilla
**Configuration:** X-pos EUT
**Location:** Chamber C
**Mode:** LTE_16QAM Band 26 Fundamentals, 5MHz Bandwidth

**Test Equipment:**
**Receiving: Hybrid T185, and Chamber C SMA Cables**
**Substitution: Dipole T416, 6ft SMA Cable Warehouse**

| f MHz | SG reading (dBm) | Ant. Pol. (H/V) | Cable Loss (dB) | Antenna Gain (dBd) | ERP (dBm) | Limit (dBm) | Delta (dB) | Notes |
|---|---|---|---|---|---|---|---|---|
| Low Ch | | | | | | | | |
| 816.50 | 11.14 | V | 0.9 | 0.0 | 10.24 | 50.0 | -39.8 | |
| 816.50 | 20.52 | H | 0.9 | 0.0 | 19.62 | 50.0 | -30.4 | |
| Mid Ch | | | | | | | | |
| 831.50 | 11.96 | V | 0.9 | 0.0 | 11.06 | 38.5 | -27.4 | |
| 831.50 | 20.03 | H | 0.9 | 0.0 | 19.13 | 38.5 | -19.4 | |
| High Ch | | | | | | | | |
| 846.50 | 13.26 | V | 0.9 | 0.0 | 12.36 | 38.5 | -26.1 | |
| 846.50 | 20.21 | H | 0.9 | 0.0 | 19.31 | 38.5 | -19.2 | |


UL VERFICATION SERVICES FORM ID: FCC_22_24_27_90
47173 BENICIA STREET, FREMONT, CA 94538, USA TEL: (510) 771-1000 FAX: (510) 661-0888
*This report shall not be reproduced except in full, without the written approval of UL Verification Services Inc.*

Band

LTE26

5MHz

QPSK

**High Frequency Substitution Measurement**
**UL Verification Services, Inc.**

**Company:** LG Electronics
**Project #:** 15I20514
**Date:** 4/24/2015
**Test Engineer:** Angel Escamilla
**Configuration:** X-pos EUT
**Location:** Chamber C
**Mode:** LTE_QPSK Band 26 Fundamentals, 5MHz Bandwidth

**Test Equpment:**
**Receiving: Hybrid T185, and Chamber C SMA Cables**
**Substitution: Dipole T416, 6ft SMA Cable Warehouse**

| f MHz | SG reading (dBm) | Ant. Pol. (H/V) | Cable Loss (dB) | Antenna Gain (dBd) | ERP (dBm) | Limit (dBm) | Delta (dB) | Notes |
|---|---|---|---|---|---|---|---|---|
| Low Ch | | | | | | | | |
| 816.50 | 11.82 | V | 0.9 | 0.0 | 10.92 | 50.0 | -39.1 | |
| 816.50 | 21.35 | H | 0.9 | 0.0 | 20.45 | 50.0 | -29.6 | |
| Mid Ch | | | | | | | | |
| 831.50 | 13.24 | V | 0.9 | 0.0 | 12.34 | 38.5 | -26.2 | |
| 831.50 | 21.11 | H | 0.9 | 0.0 | 20.21 | 38.5 | -18.3 | |
| High Ch | | | | | | | | |
| 846.50 | 13.59 | V | 0.9 | 0.0 | 12.69 | 38.5 | -25.8 | |
| 846.50 | 20.73 | H | 0.9 | 0.0 | 19.83 | 38.5 | -18.7 | |


UL VERFICATION SERVICES FORM ID: FCC_22_24_27_90
47173 BENICIA STREET, FREMONT, CA 94538, USA TEL: (510) 771-1000 FAX: (510) 661-0888
*This report shall not be reproduced except in full, without the written approval of UL Verification Services Inc.*

Band

LTE26

3MHz

16QAM

**High Frequency Substitution Measurement**
**UL Verification Services, Inc.**

**Company:** LG Electronics
**Project #:** 15I20514
**Date:** 4/24/2015
**Test Engineer:** Angel Escamilla
**Configuration:** X-pos EUT
**Location:** Chamber C
**Mode:** LTE_16QAM Band 26 Fundamentals, 3MHz Bandwidth

**Test Equipment:**
**Receiving: Hybrid T185, and Chamber C SMA Cables**
**Substitution: Dipole T416, 6ft SMA Cable Warehouse**

| f MHz | SG reading (dBm) | Ant. Pol. (H/V) | Cable Loss (dB) | Antenna Gain (dBd) | ERP (dBm) | Limit (dBm) | Delta (dB) | Notes |
|---|---|---|---|---|---|---|---|---|
| Low Ch | | | | | | | | |
| 815.50 | 11.42 | V | 0.9 | 0.0 | 10.52 | 50.0 | -39.5 | |
| 815.50 | 20.61 | H | 0.9 | 0.0 | 19.71 | 50.0 | -30.3 | |
| Mid Ch | | | | | | | | |
| 831.50 | 12.41 | V | 0.9 | 0.0 | 11.51 | 38.5 | -27.0 | |
| 831.50 | 20.34 | H | 0.9 | 0.0 | 19.44 | 38.5 | -19.1 | |
| High Ch | | | | | | | | |
| 847.50 | 12.50 | V | 0.9 | 0.0 | 11.60 | 38.5 | -26.9 | |
| 847.50 | 20.20 | H | 0.9 | 0.0 | 19.30 | 38.5 | -19.2 | |


*This report shall not be reproduced except in full, without the written approval of UL Verification Services Inc.*

Band

LTE26

3MHz

QPSK

**High Frequency Substitution Measurement**
**UL Verification Services, Inc.**

**Company:** LG Electronics
**Project #:** 15I20514
**Date:** 4/24/2015
**Test Engineer:** Angel Escamilla
**Configuration:** X-pos EUT
**Location:** Chamber C
**Mode:** LTE_QPSK Band 26 Fundamentals, 3MHz Bandwidth

**Test Equpment:**
**Receiving: Hybrid T185, and Chamber C SMA Cables**
**Substitution: Dipole T416, 6ft SMA Cable Warehouse**

| f MHz | SG reading (dBm) | Ant. Pol. (H/V) | Cable Loss (dB) | Antenna Gain (dBd) | ERP (dBm) | Limit (dBm) | Delta (dB) | Notes |
|---|---|---|---|---|---|---|---|---|
| Low Ch | | | | | | | | |
| 815.50 | 12.07 | V | 0.9 | 0.0 | 11.17 | 50.0 | -38.8 | |
| 815.50 | 21.56 | H | 0.9 | 0.0 | 20.66 | 50.0 | -29.3 | |
| Mid Ch | | | | | | | | |
| 831.50 | 13.22 | V | 0.9 | 0.0 | 12.32 | 38.5 | -26.2 | |
| 831.50 | 21.10 | H | 0.9 | 0.0 | 20.20 | 38.5 | -18.3 | |
| High Ch | | | | | | | | |
| 847.50 | 13.54 | V | 0.9 | 0.0 | 12.64 | 38.5 | -25.9 | |
| 847.50 | 21.03 | H | 0.9 | 0.0 | 20.13 | 38.5 | -18.4 | |


*This report shall not be reproduced except in full, without the written approval of UL Verification Services Inc.*

Band

LTE26

1.4MHz

16QAM

**High Frequency Substitution Measurement**
**UL Verification Services, Inc.**

**Company:** LG Electronics
**Project #:** 15I20514
**Date:** 4/24/2015
**Test Engineer:** Angel Escamilla
**Configuration:** X-pos EUT
**Location:** Chamber C
**Mode:** LTE_16QAM Band 26 Fundamentals, 1.4MHz Bandwidth

**Test Equpment:**
**Receiving: Hybrid T185, and Chamber C SMA Cables**
**Substitution: Dipole T416, 6ft SMA Cable Warehouse**

| f MHz | SG reading (dBm) | Ant. Pol. (H/V) | Cable Loss (dB) | Antenna Gain (dBd) | ERP (dBm) | Limit (dBm) | Delta (dB) | Notes |
|---|---|---|---|---|---|---|---|---|
| Low Ch | | | | | | | | |
| 814.70 | 10.80 | V | 0.9 | 0.0 | 9.90 | 50.0 | -40.1 | |
| 814.70 | 20.01 | H | 0.9 | 0.0 | 19.11 | 50.0 | -30.9 | |
| Mid Ch | | | | | | | | |
| 831.50 | 9.33 | V | 0.9 | 0.0 | 8.43 | 38.5 | -30.1 | |
| 831.50 | 20.62 | H | 0.9 | 0.0 | 19.72 | 38.5 | -18.8 | |
| High Ch | | | | | | | | |
| 848.30 | 11.43 | V | 0.9 | 0.0 | 10.53 | 38.5 | -28.0 | |
| 848.30 | 18.75 | H | 0.9 | 0.0 | 17.85 | 38.5 | -20.7 | |


UL VERFICATION SERVICES FORM ID: FCC_22_24_27_90
47173 BENICIA STREET, FREMONT, CA 94538, USA TEL: (510) 771-1000 FAX: (510) 661-0888
*This report shall not be reproduced except in full, without the written approval of UL Verification Services Inc.*

Band

LTE26

1.4MHz

QPSK

**High Frequency Substitution Measurement**
**UL Verification Services, Inc.**

**Company:** LG Electronics
**Project #:** 15I20514
**Date:** 4/24/2015
**Test Engineer:** Angel Escamilla
**Configuration:** X-pos EUT
**Location:** Chamber C
**Mode:** LTE_QPSK Band 26 Fundamentals, 1.4MHz Bandwidth

**Test Equpment:**
**Receiving: Hybrid T185, and Chamber C SMA Cables**
**Substitution: Dipole T416, 6ft SMA Cable Warehouse**

| f MHz | SG reading (dBm) | Ant. Pol. (H/V) | Cable Loss (dB) | Antenna Gain (dBd) | ERP (dBm) | Limit (dBm) | Delta (dB) | Notes |
|---|---|---|---|---|---|---|---|---|
| Low Ch | | | | | | | | |
| 814.70 | 12.13 | V | 0.9 | 0.0 | 11.23 | 50.0 | -38.8 | |
| 814.70 | 20.81 | H | 0.9 | 0.0 | 19.91 | 50.0 | -30.1 | |
| Mid Ch | | | | | | | | |
| 831.50 | 11.29 | V | 0.9 | 0.0 | 10.39 | 38.5 | -28.1 | |
| 831.50 | 22.20 | H | 0.9 | 0.0 | 21.30 | 38.5 | -17.2 | |
| High Ch | | | | | | | | |
| 848.30 | 12.98 | V | 0.9 | 0.0 | 12.08 | 38.5 | -26.4 | |
| 848.30 | 21.76 | H | 0.9 | 0.0 | 20.86 | 38.5 | -17.6 | |


UL VERFICATION SERVICES FORM ID: FCC_22_24_27_90
47173 BENICIA STREET, FREMONT, CA 94538, USA TEL: (510) 771-1000 FAX: (510) 661-0888
*This report shall not be reproduced except in full, without the written approval of UL Verification Services Inc.*

## LTE Band 41

Band

LTE41

20MHz

16QAM

**High Frequency Substitution Measurement**
**UL Verification Services, Inc.**

**Company:** LG Electronics
**Project #:** 15I20514
**Date:** 4/15/2015
**Test Engineer:** R.Z
**Configuration:** EUT ONLY
**Location:** Chamber G
**Mode:** LTE_16QAM Band 41 Fundamentals, 20MHz Bandwidth

**Test Equipment:**
**Receiving: Horn T711, and Chamber G SMA Cables**
**Substitution: Horn T60, 6ft SMA Cable**

| f MHz | SG reading (dBm) | Ant. Pol. (H/V) | Cable Loss (dB) | Antenna Gain (dBi) | EIRP (dBm) | Limit (dBm) | Delta (dB) | Notes |
|---|---|---|---|---|---|---|---|---|
| Low Ch | | | | | | | | |
| 2506.00 | 10.00 | V | 0.9 | 9.5 | 18.58 | 33.0 | -14.4 | -30.5 |
| 2506.00 | 16.40 | H | 0.9 | 9.5 | 24.98 | 33.0 | -8.0 | -24.3 |
| Mid Ch | | | | | | | | |
| 2593.00 | 10.40 | V | 0.9 | 9.5 | 19.01 | 33.0 | -14.0 | -30.7 |
| 2593.00 | 16.50 | H | 0.9 | 9.5 | 25.11 | 33.0 | -7.9 | -24.7 |
| High Ch | | | | | | | | |
| 2680.00 | 10.00 | V | 0.9 | 9.7 | 18.83 | 33.0 | -14.2 | -30.8 |
| 2680.00 | 15.90 | H | 0.9 | 9.7 | 24.73 | 33.0 | -8.3 | -25.0 |


*This report shall not be reproduced except in full, without the written approval of UL Verification Services Inc.*

Band

LTE41

20MHz

QPSK

**High Frequency Substitution Measurement**
**UL Verification Services, Inc.**

**Company:** LG Electronics
**Project #:** 15I20514
**Date:** 4/15/2015
**Test Engineer:** R.Z
**Configuration:** EUT ONLY
**Location:** Chamber G
**Mode:** LTE_QPSK Band 41 Fundamentals, 20MHz Bandwidth

**Test Equpment:**
**Receiving: Horn T711, and Chamber G SMA Cables**
**Substitution: Horn T60, 6ft SMA Cable**

| f MHz | SG reading (dBm) | Ant. Pol. (H/V) | Cable Loss (dB) | Antenna Gain (dBi) | EIRP (dBm) | Limit (dBm) | Delta (dB) | Notes |
|---|---|---|---|---|---|---|---|---|
| Low Ch | | | | | | | | |
| 2506.00 | 10.00 | V | 0.9 | 9.5 | 18.58 | 33.0 | -14.4 | |
| 2506.00 | 16.56 | H | 0.9 | 9.5 | 25.14 | 33.0 | -7.9 | |
| Mid Ch | | | | | | | | |
| 2593.00 | 10.70 | V | 0.9 | 9.5 | 19.31 | 33.0 | -13.7 | |
| 2593.00 | 16.80 | H | 0.9 | 9.5 | 25.41 | 33.0 | -7.6 | |
| High Ch | | | | | | | | |
| 2680.00 | 10.40 | V | 0.9 | 9.7 | 19.23 | 33.0 | -13.8 | |
| 2680.00 | 16.20 | H | 0.9 | 9.7 | 25.03 | 33.0 | -8.0 | |


*This report shall not be reproduced except in full, without the written approval of UL Verification Services Inc.*

Band

LTE41

15MHz

16QAM

**High Frequency Substitution Measurement**
**UL Verification Services, Inc.**

**Company:** LG Electronics
**Project #:** 15I20514
**Date:** 4/15/2015
**Test Engineer:** R.Z
**Configuration:** EUT ONLY
**Location:** Chamber G
**Mode:** LTE_16QAM Band 41 Fundamentals, 15MHz Bandwidth

**Test Equpment:**
**Receiving: Horn T711, and Chamber G SMA Cables**
**Substitution: Horn T60, 6ft SMA Cable**

| f MHz | SG reading (dBm) | Ant. Pol. (H/V) | Cable Loss (dB) | Antenna Gain (dBi) | EIRP (dBm) | Limit (dBm) | Delta (dB) | Notes |
|---|---|---|---|---|---|---|---|---|
| Low Ch | | | | | | | | |
| 2503.50 | 9.50 | V | 0.9 | 9.5 | 18.08 | 33.0 | -14.9 | |
| 2503.50 | 16.00 | H | 0.9 | 9.5 | 24.58 | 33.0 | -8.4 | |
| Mid Ch | | | | | | | | |
| 2593.00 | 9.80 | V | 0.9 | 9.5 | 18.41 | 33.0 | -14.6 | |
| 2593.00 | 16.30 | H | 0.9 | 9.5 | 24.91 | 33.0 | -8.1 | |
| High Ch | | | | | | | | |
| 2682.50 | 9.20 | V | 0.9 | 9.7 | 18.03 | 33.0 | -15.0 | |
| 2682.50 | 15.50 | H | 0.9 | 9.7 | 24.33 | 33.0 | -8.7 | |


UL VERFICATION SERVICES FORM ID: FCC_22_24_27_90
47173 BENICIA STREET, FREMONT, CA 94538, USA TEL: (510) 771-1000 FAX: (510) 661-0888
*This report shall not be reproduced except in full, without the written approval of UL Verification Services Inc.*

Band

LTE41

15MHz

QPSK

**High Frequency Substitution Measurement**
**UL Verification Services, Inc.**

**Company:** LG Electronics
**Project #:** 15I20514
**Date:** 4/15/2015
**Test Engineer:** R.Z
**Configuration:** EUT ONLY
**Location:** Chamber G
**Mode:** LTE_QPSK Band 41 Fundamentals, 15MHz Bandwidth

**Test Equpment:**
**Receiving: Horn T711, and Chamber G SMA Cables**
**Substitution: Horn T60, 6ft SMA Cable**

| f MHz | SG reading (dBm) | Ant. Pol. (H/V) | Cable Loss (dB) | Antenna Gain (dBi) | EIRP (dBm) | Limit (dBm) | Delta (dB) | Notes |
|---|---|---|---|---|---|---|---|---|
| Low Ch | | | | | | | | |
| 2503.50 | 9.70 | V | 0.9 | 9.5 | 18.28 | 33.0 | -14.7 | |
| 2503.50 | 16.60 | H | 0.9 | 9.5 | 25.18 | 33.0 | -7.8 | |
| Mid Ch | | | | | | | | |
| 2593.00 | 10.10 | V | 0.9 | 9.5 | 18.71 | 33.0 | -14.3 | |
| 2593.00 | 16.90 | H | 0.9 | 9.5 | 25.51 | 33.0 | -7.5 | |
| High Ch | | | | | | | | |
| 2682.50 | 9.40 | V | 0.9 | 9.7 | 18.23 | 33.0 | -14.8 | |
| 2682.50 | 15.90 | H | 0.9 | 9.7 | 24.73 | 33.0 | -8.3 | |


*This report shall not be reproduced except in full, without the written approval of UL Verification Services Inc.*

Band

LTE41

10MHz

16QAM

**High Frequency Substitution Measurement**
**UL Verification Services, Inc.**

**Company:** LG Electronics
**Project #:** 15I20514
**Date:** 4/15/2015
**Test Engineer:** R.Z
**Configuration:** EUT ONLY
**Location:** Chamber G
**Mode:** LTE_16QAM Band 41 Fundamentals, 10MHz Bandwidth

**Test Equpment:**
**Receiving: Horn T711, and Chamber G SMA Cables**
**Substitution: Horn T60, 6ft SMA Cable**

| f MHz | SG reading (dBm) | Ant. Pol. (H/V) | Cable Loss (dB) | Antenna Gain (dBi) | EIRP (dBm) | Limit (dBm) | Delta (dB) | Notes |
|---|---|---|---|---|---|---|---|---|
| Low Ch | | | | | | | | |
| 2501.00 | 9.60 | V | 0.9 | 9.5 | 18.18 | 33.0 | -14.8 | |
| 2501.00 | 16.58 | H | 0.9 | 9.5 | 25.16 | 33.0 | -7.8 | |
| Mid Ch | | | | | | | | |
| 2593.00 | 9.80 | V | 0.9 | 9.5 | 18.41 | 33.0 | -14.6 | |
| 2593.00 | 16.20 | H | 0.9 | 9.5 | 24.81 | 33.0 | -8.2 | |
| High Ch | | | | | | | | |
| 2685.00 | 9.20 | V | 0.9 | 9.7 | 18.04 | 33.0 | -15.0 | |
| 2685.00 | 15.20 | H | 0.9 | 9.7 | 24.04 | 33.0 | -9.0 | |


*This report shall not be reproduced except in full, without the written approval of UL Verification Services Inc.*

Band

LTE41

10MHz

QPSK

**High Frequency Substitution Measurement**
**UL Verification Services, Inc.**

**Company:** LG Electronics
**Project #:** 15I20514
**Date:** 4/15/2015
**Test Engineer:** R.Z
**Configuration:** EUT ONLY
**Location:** Chamber G
**Mode:** LTE_QPSK Band 41 Fundamentals, 10MHz Bandwidth

**Test Equpment:**
**Receiving: Horn T711, and Chamber G SMA Cables**
**Substitution: Horn T60, 6ft SMA Cable**

| f MHz | SG reading (dBm) | Ant. Pol. (H/V) | Cable Loss (dB) | Antenna Gain (dBi) | EIRP (dBm) | Limit (dBm) | Delta (dB) | Notes |
|---|---|---|---|---|---|---|---|---|
| Low Ch | | | | | | | | |
| 2501.00 | 9.96 | V | 0.9 | 9.5 | 18.54 | 33.0 | -14.5 | |
| 2501.00 | 16.80 | H | 0.9 | 9.5 | 25.38 | 33.0 | -7.6 | |
| Mid Ch | | | | | | | | |
| 2593.00 | 10.40 | V | 0.9 | 9.5 | 19.01 | 33.0 | -14.0 | |
| 2593.00 | 17.20 | H | 0.9 | 9.5 | 25.81 | 33.0 | -7.2 | |
| High Ch | | | | | | | | |
| 2685.00 | 9.60 | V | 0.9 | 9.7 | 18.44 | 33.0 | -14.6 | |
| 2685.00 | 15.60 | H | 0.9 | 9.7 | 24.44 | 33.0 | -8.6 | |


*This report shall not be reproduced except in full, without the written approval of UL Verification Services Inc.*

Band

LTE41

5MHz

16QAM

**High Frequency Substitution Measurement**
**UL Verification Services, Inc.**

**Company:** LG Electronics
**Project #:** 15I20514
**Date:** 4/15/2015
**Test Engineer:** R.Z
**Configuration:** EUT ONLY
**Location:** Chamber G
**Mode:** LTE_16QAM Band 41 Fundamentals, 5MHz Bandwidth

**Test Equpment:**
**Receiving: Horn T711, and Chamber G SMA Cables**
**Substitution: Horn T60, 6ft SMA Cable**

| f MHz | SG reading (dBm) | Ant. Pol. (H/V) | Cable Loss (dB) | Antenna Gain (dBi) | EIRP (dBm) | Limit (dBm) | Delta (dB) | Notes |
|---|---|---|---|---|---|---|---|---|
| Low Ch | | | | | | | | |
| 2498.50 | 9.10 | V | 0.9 | 9.5 | 17.67 | 33.0 | -15.3 | |
| 2498.50 | 15.50 | H | 0.9 | 9.5 | 24.07 | 33.0 | -8.9 | |
| Mid Ch | | | | | | | | |
| 2593.00 | 10.20 | V | 0.9 | 9.5 | 18.81 | 33.0 | -14.2 | |
| 2593.00 | 16.90 | H | 0.9 | 9.5 | 25.51 | 33.0 | -7.5 | |
| High Ch | | | | | | | | |
| 2687.50 | 9.50 | V | 0.9 | 9.7 | 18.35 | 33.0 | -14.7 | |
| 2687.50 | 15.80 | H | 0.9 | 9.7 | 24.65 | 33.0 | -8.4 | |


UL VERFICATION SERVICES FORM ID: FCC_22_24_27_90
47173 BENICIA STREET, FREMONT, CA 94538, USA TEL: (510) 771-1000 FAX: (510) 661-0888
*This report shall not be reproduced except in full, without the written approval of UL Verification Services Inc.*

Band

LTE41

5MHz

QPSK

**High Frequency Substitution Measurement**
**UL Verification Services, Inc.**

**Company:** LG Electronics
**Project #:** 15I20514
**Date:** 4/15/2015
**Test Engineer:** R.Z
**Configuration:** EUT ONLY
**Location:** Chamber G
**Mode:** LTE_QPSK Band 41 Fundamentals, 5MHz Bandwidth

**Test Equpment:**
**Receiving: Horn T711, and Chamber G SMA Cables**
**Substitution: Horn T60, 6ft SMA Cable**

| f MHz | SG reading (dBm) | Ant. Pol. (H/V) | Cable Loss (dB) | Antenna Gain (dBi) | EIRP (dBm) | Limit (dBm) | Delta (dB) | Notes |
|---|---|---|---|---|---|---|---|---|
| Low Ch | | | | | | | | |
| 2498.50 | 9.68 | V | 0.9 | 9.5 | 18.25 | 33.0 | -14.7 | |
| 2498.50 | 16.36 | H | 0.9 | 9.5 | 24.93 | 33.0 | -8.1 | |
| Mid Ch | | | | | | | | |
| 2593.00 | 10.60 | V | 0.9 | 9.5 | 19.21 | 33.0 | -13.8 | |
| 2593.00 | 18.03 | H | 0.9 | 9.5 | 26.63 | 33.0 | -6.4 | |
| High Ch | | | | | | | | |
| 2687.50 | 10.00 | V | 0.9 | 9.7 | 18.85 | 33.0 | -14.2 | |
| 2687.50 | 16.53 | H | 0.9 | 9.7 | 25.37 | 33.0 | -7.6 | |


UL VERFICATION SERVICES FORM ID: FCC_22_24_27_90
47173 BENICIA STREET, FREMONT, CA 94538, USA TEL: (510) 771-1000 FAX: (510) 661-0888
*This report shall not be reproduced except in full, without the written approval of UL Verification Services Inc.*

## 9.2. FIELD STRENGTH OF SPURIOUS RADIATION

**RULE PART(S)**

FCC: §2.1053, §22.917, §24.238, §27.53 and §90.691

**LIMIT**

The power of any emission outside of the authorized operating frequency ranges must be attenuated below the transmitting power (P) by a factor of at least 43 + 10 log (P) dB.

Part 27: (m)(4) (4) For mobile digital stations, the attenuation factor shall be not less than 40 + 10 log (P) dB on all frequencies between the channel edge and 5 megahertz from the channel edge, 43 + 10 log (P) dB on all frequencies between 5 megahertz and X megahertz from the channel edge, and 55 + 10 log (P) dB on all frequencies more than X megahertz from the channel edge, where X is the greater of 6 megahertz or the actual emission bandwidth as defined in paragraph (m)(6) of this section. In addition, the attenuation factor shall not be less that 43 + 10 log (P) dB on all frequencies between 2490.5 MHz and 2496 MHz and 55 + 10 log (P) dB at or below 2490.5 MHz. Mobile Satellite Service licensees operating on frequencies below 2495 MHz may also submit a documented interference complaint against BRS licensees operating on channel BRS Channel 1 on the same terms and conditions as adjacent channel BRS or EBS licensees.

**MODES TESTED**

GSM, CDMA, WCDMA, and LTE

**RESULTS**



UL VERFICATION SERVICES FORM ID: FCC_22_24_27_90
47173 BENICIA STREET, FREMONT, CA 94538, USA TEL: (510) 771-1000 FAX: (510) 661-0888

*This report shall not be reproduced except in full, without the written approval of UL Verification Services Inc.*

## 9.2.1. SPURIOUS RADIATION PLOTS

**GSM**

**UL Verification Services, Inc.**
**Above 1GHz High Frequency Substitution Measurement**

**Company:** LG
**Project #:** 15I20514
**Date:** 4/24/2015
**Test Engineer:** D. Mun
**Configuration:** x-pos EUT/AC Charger/ HS
**Mode:** EGPRS1900

| Chamber | Pre-amplifer | Filter | Limit |
|---|---|---|---|
| 5m Chamber B | T34 8449B | Filter 1 | Part 24 |

Band

GSM 1900

EGPRS

| f GHz | SG reading (dBm) | Ant. Pol. (H/V) | Distance (m) | Preamp (dB) | Filter (dB) | EIRP (dBm) | Limit (dBm) | Delta (dB) | Notes |
|---|---|---|---|---|---|---|---|---|---|
| Low Ch, 1850.2MHz | | | | | | | | | |
| 3.700 | -11.3 | V | 3.0 | 35.4 | 1.0 | -45.7 | -13.0 | -32.7 | |
| 5.551 | -9.1 | V | 3.0 | 34.7 | 1.0 | -42.8 | -13.0 | -29.8 | |
| 7.401 | -10.5 | V | 3.0 | 34.9 | 1.0 | -44.5 | -13.0 | -31.5 | |
| 3.700 | -9.5 | H | 3.0 | 35.4 | 1.0 | -43.9 | -13.0 | -30.9 | |
| 5.551 | -6.1 | H | 3.0 | 34.7 | 1.0 | -39.8 | -13.0 | -26.8 | |
| 7.401 | -9.0 | H | 3.0 | 34.9 | 1.0 | -42.9 | -13.0 | -29.9 | |
| Mid Ch, 1880.0MHz | | | | | | | | | |
| 3.760 | -10.7 | V | 3.0 | 35.3 | 1.0 | -45.0 | -13.0 | -32.0 | |
| 5.640 | -8.6 | V | 3.0 | 34.7 | 1.0 | -42.3 | -13.0 | -29.3 | |
| 7.520 | -11.1 | V | 3.0 | 34.9 | 1.0 | -45.1 | -13.0 | -32.1 | |
| 3.760 | -12.4 | H | 3.0 | 35.3 | 1.0 | -46.7 | -13.0 | -33.7 | |
| 5.640 | -8.9 | H | 3.0 | 34.7 | 1.0 | -42.6 | -13.0 | -29.6 | |
| 7.520 | -8.5 | H | 3.0 | 34.9 | 1.0 | -42.4 | -13.0 | -29.4 | |
| High Ch, 1909.8MHz | | | | | | | | | |
| 3.820 | -21.7 | V | 3.0 | 35.3 | 1.0 | -56.0 | -13.0 | -43.0 | |
| 5.729 | -13.3 | V | 3.0 | 34.7 | 1.0 | -47.0 | -13.0 | -34.0 | |
| 7.639 | -4.3 | V | 3.0 | 35.0 | 1.0 | -38.2 | -13.0 | -25.2 | |
| 3.820 | -7.6 | H | 3.0 | 35.3 | 1.0 | -41.9 | -13.0 | -28.9 | |
| 5.729 | -10.3 | H | 3.0 | 34.7 | 1.0 | -44.0 | -13.0 | -31.0 | |
| 7.639 | -10.7 | H | 3.0 | 35.0 | 1.0 | -44.6 | -13.0 | -31.6 | |

Rev. 03.03.09
Note: No other emissions were detected above the system noise floor.


UL VERFICATION SERVICES FORM ID: FCC_22_24_27_90
47173 BENICIA STREET, FREMONT, CA 94538, USA TEL: (510) 771-1000 FAX: (510) 661-0888
*This report shall not be reproduced except in full, without the written approval of UL Verification Services Inc.*

**UL Verification Services, Inc.**
**Above 1GHz High Frequency Substitution Measurement**

**Company:** LG
**Project #:** 15I20514
**Date:** 4/24/2015
**Test Engineer:** D. Mun
**Configuration:** x-pos EUT/AC Charger/ HS
**Mode:** GPRS1900

| Chamber | Pre-amplifer | Filter | Limit |
|---|---|---|---|
| 5m Chamber B | T34 8449B | Filter 1 | Part 24 |

| Band | f GHz | SG reading (dBm) | Ant. Pol. (H/V) | Distance (m) | Preamp (dB) | Filter (dB) | EIRP (dBm) | Limit (dBm) | Delta (dB) | Notes |
|---|---|---|---|---|---|---|---|---|---|---|
| GSM 1900 GPRS | Low Ch, 1850.2MHz | | | | | | | | | |
| | 3.700 | -19.3 | V | 3.0 | 35.4 | 1.0 | -53.7 | -13.0 | -40.7 | |
| | 5.551 | -17.8 | V | 3.0 | 34.7 | 1.0 | -51.6 | -13.0 | -38.6 | |
| | 7.401 | -16.3 | V | 3.0 | 34.9 | 1.0 | -50.2 | -13.0 | -37.2 | |
| | 3.700 | -21.6 | H | 3.0 | 35.4 | 1.0 | -56.0 | -13.0 | -43.0 | |
| | 5.551 | -16.3 | H | 3.0 | 34.7 | 1.0 | -50.0 | -13.0 | -37.0 | |
| | 7.401 | -16.3 | H | 3.0 | 34.9 | 1.0 | -50.2 | -13.0 | -37.2 | |
| | Mid Ch, 1880.0MHz | | | | | | | | | |
| | 3.760 | -17.2 | V | 3.0 | 35.3 | 1.0 | -51.5 | -13.0 | -38.5 | |
| | 5.640 | -19.2 | V | 3.0 | 34.7 | 1.0 | -52.9 | -13.0 | -39.9 | |
| | 7.520 | -17.7 | V | 3.0 | 34.9 | 1.0 | -51.7 | -13.0 | -38.7 | |
| | 3.760 | -19.1 | H | 3.0 | 35.3 | 1.0 | -53.4 | -13.0 | -40.4 | |
| | 5.640 | -17.0 | H | 3.0 | 34.7 | 1.0 | -50.7 | -13.0 | -37.7 | |
| | 7.520 | -15.5 | H | 3.0 | 34.9 | 1.0 | -49.4 | -13.0 | -36.4 | |
| | High Ch, 1909.8MHz | | | | | | | | | |
| | 3.820 | -20.1 | V | 3.0 | 35.3 | 1.0 | -54.4 | -13.0 | -41.4 | |
| | 5.729 | -18.2 | V | 3.0 | 34.7 | 1.0 | -51.9 | -13.0 | -38.9 | |
| | 7.639 | -17.0 | V | 3.0 | 35.0 | 1.0 | -50.9 | -13.0 | -37.9 | |
| | 3.820 | -21.4 | H | 3.0 | 35.3 | 1.0 | -55.7 | -13.0 | -42.7 | |
| | 5.729 | -17.6 | H | 3.0 | 34.7 | 1.0 | -51.3 | -13.0 | -38.3 | |
| | 7.639 | -15.4 | H | 3.0 | 35.0 | 1.0 | -49.4 | -13.0 | -36.4 | |

Rev. 03.03.09



*This report shall not be reproduced except in full, without the written approval of UL Verification Services Inc.*

Band

GSM 850

EGPRS

**UL Verification Services, Inc.**
**Above 1GHz High Frequency Substitution Measurement**

**Company:** LG Electronics
**Project #:** 15I20514
**Date:** 4/24/2015
**Test Engineer:** D. Mun
**Configuration:** X-pos EUT w/ AC Adapter + Headset
**Location:** Chamber C
**Mode:** EGPRS 850 MHz Harmonics

| f MHz | SG reading (dBm) | Ant. Pol. (H/V) | Distance (m) | Preamp (dB) | Filter (dB) | EIRP (dBm) | Limit (dBm) | Delta (dB) | Notes |
|---|---|---|---|---|---|---|---|---|---|
| Low Ch, 824.2 | | | | | | | | | |
| 1648.40 | -30.0 | V | 3.0 | 37.0 | 1.0 | -66.0 | -13.0 | -53.0 | |
| 2472.60 | -26.4 | V | 3.0 | 36.4 | 1.0 | -61.8 | -13.0 | -48.8 | |
| 3296.80 | -25.5 | V | 3.0 | 36.2 | 1.0 | -60.7 | -13.0 | -47.7 | |
| 1648.40 | -31.3 | H | 3.0 | 37.0 | 1.0 | -67.4 | -13.0 | -54.4 | |
| 2472.60 | -28.9 | H | 3.0 | 36.4 | 1.0 | -64.3 | -13.0 | -51.3 | |
| 3296.80 | -25.8 | H | 3.0 | 36.2 | 1.0 | -61.0 | -13.0 | -48.0 | |
| Mid Ch, 836.6 | | | | | | | | | |
| 1673.20 | -30.8 | V | 3.0 | 37.0 | 1.0 | -66.8 | -13.0 | -53.8 | |
| 2509.80 | -26.2 | V | 3.0 | 36.4 | 1.0 | -61.6 | -13.0 | -48.6 | |
| 3346.40 | -26.9 | V | 3.0 | 36.1 | 1.0 | -62.0 | -13.0 | -49.0 | |
| 1673.20 | -30.1 | H | 3.0 | 37.0 | 1.0 | -66.1 | -13.0 | -53.1 | |
| 2509.80 | -27.2 | H | 3.0 | 36.4 | 1.0 | -62.6 | -13.0 | -49.6 | |
| 3346.40 | -25.3 | H | 3.0 | 36.1 | 1.0 | -60.4 | -13.0 | -47.4 | |
| High Ch, 848.8 | | | | | | | | | |
| 1697.60 | -30.6 | V | 3.0 | 37.0 | 1.0 | -66.6 | -13.0 | -53.6 | |
| 2546.40 | -26.3 | V | 3.0 | 36.4 | 1.0 | -61.7 | -13.0 | -48.7 | |
| 3395.20 | -25.2 | V | 3.0 | 36.1 | 1.0 | -60.3 | -13.0 | -47.3 | |
| 1697.60 | -30.9 | H | 3.0 | 37.0 | 1.0 | -66.9 | -13.0 | -53.9 | |
| 2546.40 | -28.3 | H | 3.0 | 36.4 | 1.0 | -63.7 | -13.0 | -50.7 | |
| 3395.20 | -26.3 | H | 3.0 | 36.1 | 1.0 | -61.4 | -13.0 | -48.4 | |



UL VERFICATION SERVICES FORM ID: FCC_22_24_27_90
47173 BENICIA STREET, FREMONT, CA 94538, USA TEL: (510) 771-1000 FAX: (510) 661-0888

*This report shall not be reproduced except in full, without the written approval of UL Verification Services Inc.*

Band

GSM850

GPRS

**UL Verification Services, Inc.**
**Above 1GHz High Frequency Substitution Measurement**

**Company:** LG Electronics
**Project #:** 15I20514
**Date:** 4/24/2015
**Test Engineer:** D. Mun
**Configuration:** X-pos EUT w/ AC Adapter + Headset
**Location:** Chamber C
**Mode:** GPRS 850 MHz Harmonics

| f MHz | SG reading (dBm) | Ant. Pol. (H/V) | Distance (m) | Preamp (dB) | Filter (dB) | EIRP (dBm) | Limit (dBm) | Delta (dB) | Notes |
|---|---|---|---|---|---|---|---|---|---|
| Low Ch, 824.2 | | | | | | | | | |
| 1648.40 | -30.4 | V | 3.0 | 37.0 | 1.0 | -66.4 | -13.0 | -53.4 | |
| 2472.60 | -26.6 | V | 3.0 | 36.4 | 1.0 | -62.1 | -13.0 | -49.1 | |
| 3296.80 | -25.3 | V | 3.0 | 36.2 | 1.0 | -60.4 | -13.0 | -47.4 | |
| 1648.40 | -28.3 | H | 3.0 | 37.0 | 1.0 | -64.3 | -13.0 | -51.3 | |
| 2472.60 | -27.3 | H | 3.0 | 36.4 | 1.0 | -62.8 | -13.0 | -49.8 | |
| 3296.80 | -25.5 | H | 3.0 | 36.2 | 1.0 | -60.7 | -13.0 | -47.7 | |
| Mid Ch, 836.6 | | | | | | | | | |
| 1673.20 | -25.8 | V | 3.0 | 37.0 | 1.0 | -61.8 | -13.0 | -48.8 | |
| 2509.80 | -22.2 | V | 3.0 | 36.4 | 1.0 | -57.7 | -13.0 | -44.7 | |
| 3346.40 | -24.6 | V | 3.0 | 36.1 | 1.0 | -59.7 | -13.0 | -46.7 | |
| 1673.20 | -30.1 | H | 3.0 | 37.0 | 1.0 | -66.1 | -13.0 | -53.1 | |
| 2509.80 | -27.8 | H | 3.0 | 36.4 | 1.0 | -63.3 | -13.0 | -50.3 | |
| 3346.40 | -24.4 | H | 3.0 | 36.1 | 1.0 | -59.5 | -13.0 | -46.5 | |
| High Ch, 848.8 | | | | | | | | | |
| 1697.60 | -24.2 | V | 3.0 | 37.0 | 1.0 | -60.2 | -13.0 | -47.2 | |
| 2546.40 | -21.8 | V | 3.0 | 36.4 | 1.0 | -57.2 | -13.0 | -44.2 | |
| 3395.20 | -19.9 | V | 3.0 | 36.1 | 1.0 | -55.0 | -13.0 | -42.0 | |
| 1697.60 | -26.1 | H | 3.0 | 37.0 | 1.0 | -62.1 | -13.0 | -49.1 | |
| 2546.40 | -24.4 | H | 3.0 | 36.4 | 1.0 | -59.8 | -13.0 | -46.8 | |
| 3395.20 | -21.5 | H | 3.0 | 36.1 | 1.0 | -56.5 | -13.0 | -43.5 | |
| | | | | | | | | | |



UL VERFICATION SERVICES FORM ID: FCC_22_24_27_90
47173 BENICIA STREET, FREMONT, CA 94538, USA TEL: (510) 771-1000 FAX: (510) 661-0888

*This report shall not be reproduced except in full, without the written approval of UL Verification Services Inc.*

**WCDMA**

**UL Verification Services**
**Above 1GHz High Frequency Substitution Measurement**

**Company:** LG Electronics
**Project #:** 15I20514
**Date:** 4/24/2015
**Test Engineer:** David Mun
**Configuration:** Y-pos EUT w/ AC Adapter + Headset
**Mode:** HSDPA_B2

| Chamber | Pre-amplifer | Filter | Limit |
|---|---|---|---|
| 5m Chamber B | T34 8449B | Filter 1 | Part 24 |

Band

Band 2

HSDPA

| f GHz | SG reading (dBm) | Ant. Pol. (H/V) | Distance (m) | Preamp (dB) | Filter (dB) | EIRP (dBm) | Limit (dBm) | Delta (dB) | Notes |
|---|---|---|---|---|---|---|---|---|---|
| Low Ch, 1852.4MHz | | | | | | | | | |
| 3.705 | -22.7 | V | 3.0 | 35.4 | 1.0 | -57.1 | -13.0 | -44.1 | |
| 5.557 | -19.4 | V | 3.0 | 34.7 | 1.0 | -53.1 | -13.0 | -40.1 | |
| 7.410 | -17.2 | V | 3.0 | 34.9 | 1.0 | -51.1 | -13.0 | -38.1 | |
| 3.705 | -21.2 | H | 3.0 | 35.4 | 1.0 | -55.6 | -13.0 | -42.6 | |
| 5.557 | -19.1 | H | 3.0 | 34.7 | 1.0 | -52.9 | -13.0 | -39.9 | |
| 7.410 | -16.0 | H | 3.0 | 34.9 | 1.0 | -49.9 | -13.0 | -36.9 | |
| Mid Ch, 1880MHz | | | | | | | | | |
| 3.760 | -21.7 | V | 3.0 | 35.3 | 1.0 | -56.0 | -13.0 | -43.0 | |
| 5.640 | -19.0 | V | 3.0 | 34.7 | 1.0 | -52.7 | -13.0 | -39.7 | |
| 7.520 | -17.7 | V | 3.0 | 34.9 | 1.0 | -51.6 | -13.0 | -38.6 | |
| 3.760 | -21.4 | H | 3.0 | 35.3 | 1.0 | -55.8 | -13.0 | -42.8 | |
| 5.640 | -17.8 | H | 3.0 | 34.7 | 1.0 | -51.5 | -13.0 | -38.5 | |
| 7.520 | -16.5 | H | 3.0 | 34.9 | 1.0 | -50.4 | -13.0 | -37.4 | |
| High Ch, 1907.6MHz | | | | | | | | | |
| 3.815 | -22.5 | V | 3.0 | 35.3 | 1.0 | -56.8 | -13.0 | -43.8 | |
| 5.723 | -19.0 | V | 3.0 | 34.7 | 1.0 | -52.7 | -13.0 | -39.7 | |
| 7.630 | -16.7 | V | 3.0 | 34.9 | 1.0 | -50.7 | -13.0 | -37.7 | |
| 3.815 | -22.4 | H | 3.0 | 35.3 | 1.0 | -56.7 | -13.0 | -43.7 | |
| 5.723 | -18.2 | H | 3.0 | 34.7 | 1.0 | -52.0 | -13.0 | -39.0 | |
| 7.630 | -16.3 | H | 3.0 | 34.9 | 1.0 | -50.2 | -13.0 | -37.2 | |

Rev. 03.03.09
Note: No other emissions were detected above the system noise floor.


UL VERFICATION SERVICES FORM ID: FCC_22_24_27_90
47173 BENICIA STREET, FREMONT, CA 94538, USA TEL: (510) 771-1000 FAX: (510) 661-0888
*This report shall not be reproduced except in full, without the written approval of UL Verification Services Inc.*

**UL Verification Services, Inc.**
**Above 1GHz High Frequency Substitution Measurement**

**Company:** LG Electronics
**Project #:** 15I20514
**Date:** 4/24/2015
**Test Engineer:** D. Mun
**Configuration:** Y-pos EUT w/ AC Adapter + Headset
**Mode:** Rel99_B2

| Chamber | Pre-amplifer | Filter | Limit |
|---|---|---|---|
| 5m Chamber B | T34 8449B | Filter 1 | Part 24 |

Band

Band 2

REL99

| f GHz | SG reading (dBm) | Ant. Pol. (H/V) | Distance (m) | Preamp (dB) | Filter (dB) | EIRP (dBm) | Limit (dBm) | Delta (dB) | Notes |
|---|---|---|---|---|---|---|---|---|---|
| Low Ch, 1852.4MHz | | | | | | | | | |
| 3.705 | -18.7 | V | 3.0 | 35.4 | 1.0 | -53.1 | -13.0 | -40.1 | |
| 5.557 | -16.0 | V | 3.0 | 34.7 | 1.0 | -49.7 | -13.0 | -36.7 | |
| 7.410 | -15.9 | V | 3.0 | 34.9 | 1.0 | -49.8 | -13.0 | -36.8 | |
| 3.705 | -16.4 | H | 3.0 | 35.4 | 1.0 | -50.8 | -13.0 | -37.8 | |
| 5.557 | -13.8 | H | 3.0 | 34.7 | 1.0 | -47.5 | -13.0 | -34.5 | |
| 7.410 | -14.3 | H | 3.0 | 34.9 | 1.0 | -48.2 | -13.0 | -35.2 | |
| Mid Ch, 1880MHz | | | | | | | | | |
| 3.760 | -17.2 | V | 3.0 | 35.3 | 1.0 | -51.5 | -13.0 | -38.5 | |
| 5.640 | -17.6 | V | 3.0 | 34.7 | 1.0 | -51.3 | -13.0 | -38.3 | |
| 7.520 | -16.5 | V | 3.0 | 34.9 | 1.0 | -50.5 | -13.0 | -37.5 | |
| 3.760 | -20.9 | H | 3.0 | 35.3 | 1.0 | -55.2 | -13.0 | -42.2 | |
| 5.640 | -16.9 | H | 3.0 | 34.7 | 1.0 | -50.7 | -13.0 | -37.7 | |
| 7.520 | -14.7 | H | 3.0 | 34.9 | 1.0 | -48.6 | -13.0 | -35.6 | |
| High Ch, 1907.6MHz | | | | | | | | | |
| 3.815 | -17.7 | V | 3.0 | 35.3 | 1.0 | -52.0 | -13.0 | -39.0 | |
| 5.723 | -15.9 | V | 3.0 | 34.7 | 1.0 | -49.6 | -13.0 | -36.6 | |
| 7.630 | -15.8 | V | 3.0 | 34.9 | 1.0 | -49.7 | -13.0 | -36.7 | |
| 3.815 | -18.3 | H | 3.0 | 35.3 | 1.0 | -52.5 | -13.0 | -39.5 | |
| 5.723 | -15.7 | H | 3.0 | 34.7 | 1.0 | -49.4 | -13.0 | -36.4 | |
| 7.630 | -14.8 | H | 3.0 | 34.9 | 1.0 | -48.8 | -13.0 | -35.8 | |

Rev. 03.03.09
Note: No other emissions were detected above the system noise floor.


UL VERFICATION SERVICES FORM ID: FCC_22_24_27_90
47173 BENICIA STREET, FREMONT, CA 94538, USA TEL: (510) 771-1000 FAX: (510) 661-0888
*This report shall not be reproduced except in full, without the written approval of UL Verification Services Inc.*

**UL Verification Services, Inc.**
**Above 1GHz High Frequency Substitution Measurement**

**Company:** LG
**Project #:** 15I20514
**Date:** 04/24/15
**Test Engineer:** D. Mun
**Configuration:** X-pos EUT, Ac Charger, Headset
**Mode:** HSDPA_B5

| Chamber | Pre-amplifer | Filter | Limit |
|---|---|---|---|
| 3m Chamber | T34 8449B | Filter 1 | Part 22 |

Band

Band 5

HSDPA

| f GHz | SG reading (dBm) | Ant. Pol. (H/V) | Distance (m) | Preamp (dB) | Filter (dB) | EIRP (dBm) | Limit (dBm) | Delta (dB) | Notes |
|---|---|---|---|---|---|---|---|---|---|
| Low Ch, 826.4MHz | | | | | | | | | |
| 1.653 | -24.4 | V | 3.0 | 37.4 | 1.0 | -60.7 | -13.0 | -47.7 | |
| 2.479 | -23.1 | V | 3.0 | 36.4 | 1.0 | -58.5 | -13.0 | -45.5 | |
| 3.306 | -22.8 | V | 3.0 | 35.8 | 1.0 | -57.6 | -13.0 | -44.6 | |
| 1.653 | -25.3 | H | 3.0 | 37.4 | 1.0 | -61.6 | -13.0 | -48.6 | |
| 2.479 | -23.9 | H | 3.0 | 36.4 | 1.0 | -59.3 | -13.0 | -46.3 | |
| 3.306 | -22.2 | H | 3.0 | 35.8 | 1.0 | -57.0 | -13.0 | -44.0 | |
| Mid Ch, 836.6MHz | | | | | | | | | |
| 1.673 | -24.6 | V | 3.0 | 37.3 | 1.0 | -60.9 | -13.0 | -47.9 | |
| 2.510 | -23.1 | V | 3.0 | 36.4 | 1.0 | -58.4 | -13.0 | -45.4 | |
| 3.346 | -21.8 | V | 3.0 | 35.8 | 1.0 | -56.5 | -13.0 | -43.5 | |
| 1.673 | -25.5 | H | 3.0 | 37.3 | 1.0 | -61.8 | -13.0 | -48.8 | |
| 2.510 | -23.5 | H | 3.0 | 36.4 | 1.0 | -58.8 | -13.0 | -45.8 | |
| 3.346 | -22.2 | H | 3.0 | 35.8 | 1.0 | -56.9 | -13.0 | -43.9 | |
| High Ch, 846.6MHz | | | | | | | | | |
| 1.693 | -23.9 | V | 3.0 | 37.3 | 1.0 | -60.2 | -13.0 | -47.2 | |
| 2.540 | -21.1 | V | 3.0 | 36.3 | 1.0 | -56.5 | -13.0 | -43.5 | |
| 3.386 | -21.2 | V | 3.0 | 35.7 | 1.0 | -55.9 | -13.0 | -42.9 | |
| 1.693 | -24.3 | H | 3.0 | 37.3 | 1.0 | -60.7 | -13.0 | -47.7 | |
| 2.540 | -24.1 | H | 3.0 | 36.3 | 1.0 | -59.4 | -13.0 | -46.4 | |
| 3.386 | -22.6 | H | 3.0 | 35.7 | 1.0 | -57.3 | -13.0 | -44.3 | |

Rev. 03.03.09
Note: No other emissions were detected above the system noise floor.



*This report shall not be reproduced except in full, without the written approval of UL Verification Services Inc.*

**UL Verification Services, Inc.**
**Above 1GHz High Frequency Substitution Measurement**

**Company:** LG
**Project #:** 15I20514
**Date:** 04/24/15
**Test Engineer:** D. Mun
**Configuration:** X-pos EUT, Ac Charger, Headset
**Mode:** REL99_B5

| Chamber | Pre-amplifer | Filter | Limit |
|---|---|---|---|
| 3m Chamber | T34 8449B | Filter 1 | Part 22 |

Band

Band 5

REL99

| f GHz | SG reading (dBm) | Ant. Pol. (H/V) | Distance (m) | Preamp (dB) | Filter (dB) | EIRP (dBm) | Limit (dBm) | Delta (dB) | Notes |
|---|---|---|---|---|---|---|---|---|---|
| Low Ch, 826.4MHz | | | | | | | | | |
| 1.653 | -25.8 | V | 3.0 | 37.4 | 1.0 | -62.2 | -13.0 | -49.2 | |
| 2.479 | -22.0 | V | 3.0 | 36.4 | 1.0 | -57.4 | -13.0 | -44.4 | |
| 3.306 | -21.4 | V | 3.0 | 35.8 | 1.0 | -56.2 | -13.0 | -43.2 | |
| 1.653 | -24.7 | H | 3.0 | 37.4 | 1.0 | -61.1 | -13.0 | -48.1 | |
| 2.479 | -23.4 | H | 3.0 | 36.4 | 1.0 | -58.8 | -13.0 | -45.8 | |
| 3.306 | -22.3 | H | 3.0 | 35.8 | 1.0 | -57.1 | -13.0 | -44.1 | |
| Mid Ch, 836.6MHz | | | | | | | | | |
| 1.673 | -28.7 | V | 3.0 | 37.3 | 1.0 | -65.1 | -13.0 | -52.1 | |
| 2.510 | -24.9 | V | 3.0 | 36.4 | 1.0 | -60.3 | -13.0 | -47.3 | |
| 3.346 | -23.6 | V | 3.0 | 35.8 | 1.0 | -58.3 | -13.0 | -45.3 | |
| 1.673 | -25.4 | H | 3.0 | 37.3 | 1.0 | -61.7 | -13.0 | -48.7 | |
| 2.510 | -24.2 | H | 3.0 | 36.4 | 1.0 | -59.5 | -13.0 | -46.5 | |
| 3.346 | -21.5 | H | 3.0 | 35.8 | 1.0 | -56.2 | -13.0 | -43.2 | |
| High Ch, 846.6MHz | | | | | | | | | |
| 1.693 | -23.2 | V | 3.0 | 37.3 | 1.0 | -59.5 | -13.0 | -46.5 | |
| 2.540 | -21.6 | V | 3.0 | 36.3 | 1.0 | -56.9 | -13.0 | -43.9 | |
| 3.386 | -20.7 | V | 3.0 | 35.7 | 1.0 | -55.4 | -13.0 | -42.4 | |
| 1.693 | -26.5 | H | 3.0 | 37.3 | 1.0 | -62.8 | -13.0 | -49.8 | |
| 2.540 | -24.3 | H | 3.0 | 36.3 | 1.0 | -59.6 | -13.0 | -46.6 | |
| 3.386 | -22.1 | H | 3.0 | 35.7 | 1.0 | -56.8 | -13.0 | -43.8 | |
| | | | | | | | | | |

Rev. 03.03.09
Note: No other emissions were detected above the system noise floor.




*This report shall not be reproduced except in full, without the written approval of UL Verification Services Inc.*

## CDMA

**UL Verification Services, Inc.**
**Above 1GHz High Frequency Substitution Measurement**

**Company:** LG Electronics
**Project #:** 15I20514
**Date:** 4/27/2015
**Test Engineer:** A. Escamilla
**Configuration:** EUT, AC Adapter, Headset
**Location:** Chamber C
**Mode:** CDMA EVDO BC1 Harmonics

Band BC1

| f MHz | SG reading (dBm) | Ant. Pol. (H/V) | Distance (m) | Preamp (dB) | Filter (dB) | EIRP (dBm) | Limit (dBm) | Delta (dB) | Notes |
|---|---|---|---|---|---|---|---|---|---|
| Low Ch, 1851.25 | | | | | | | | | |
| 3702.50 | -16.9 | V | 3.0 | 35.9 | 1.0 | -51.8 | -13.0 | -38.8 | |
| 5553.75 | -15.0 | V | 3.0 | 35.5 | 1.0 | -49.5 | -13.0 | -36.5 | |
| 7405.00 | -13.8 | V | 3.0 | 35.7 | 1.0 | -48.6 | -13.0 | -35.6 | |
| 3702.50 | -19.8 | H | 3.0 | 35.9 | 1.0 | -54.7 | -13.0 | -41.7 | |
| 5553.75 | -14.7 | H | 3.0 | 35.5 | 1.0 | -49.2 | -13.0 | -36.2 | |
| 7405.00 | -11.9 | H | 3.0 | 35.7 | 1.0 | -46.7 | -13.0 | -33.7 | |
| Mid Ch, 1880 | | | | | | | | | |
| 3760.00 | -19.2 | V | 3.0 | 35.8 | 1.0 | -54.0 | -13.0 | -41.0 | |
| 5640.00 | -13.0 | V | 3.0 | 35.5 | 1.0 | -47.5 | -13.0 | -34.5 | |
| 7520.00 | -14.2 | V | 3.0 | 35.7 | 1.0 | -49.0 | -13.0 | -36.0 | |
| 3760.00 | -18.8 | H | 3.0 | 35.8 | 1.0 | -53.6 | -13.0 | -40.6 | |
| 5640.00 | -14.9 | H | 3.0 | 35.5 | 1.0 | -49.4 | -13.0 | -36.4 | |
| 7520.00 | -12.9 | H | 3.0 | 35.7 | 1.0 | -47.6 | -13.0 | -34.6 | |
| High Ch, 1908.75 | | | | | | | | | |
| 3817.50 | -15.8 | V | 3.0 | 35.8 | 1.0 | -50.5 | -13.0 | -37.5 | |
| 5726.25 | -12.4 | V | 3.0 | 35.5 | 1.0 | -46.9 | -13.0 | -33.9 | |
| 7635.00 | -12.7 | V | 3.0 | 35.8 | 1.0 | -47.5 | -13.0 | -34.5 | |
| 3817.50 | -17.5 | H | 3.0 | 35.8 | 1.0 | -52.3 | -13.0 | -39.3 | |
| 5726.25 | -14.8 | H | 3.0 | 35.5 | 1.0 | -49.3 | -13.0 | -36.3 | |
| 7635.00 | -12.6 | H | 3.0 | 35.8 | 1.0 | -47.4 | -13.0 | -34.4 | |


UL VERFICATION SERVICES FORM ID: FCC_22_24_27_90
47173 BENICIA STREET, FREMONT, CA 94538, USA TEL: (510) 771-1000 FAX: (510) 661-0888
*This report shall not be reproduced except in full, without the written approval of UL Verification Services Inc.*

**UL Verification Services, Inc.**
**Above 1GHz High Frequency Substitution Measurement**

**Company:** LG Electronics
**Project #:** 15I20514
**Date:** 4/24/2015
**Test Engineer:** D. Mun
**Configuration:** EUT , AC Adapter, Headset
**Location:** Chamber C
**Mode:** CDMA 1xRTT BC1 Harmonics

Band BC1 1xRTT

| f MHz | SG reading (dBm) | Ant. Pol. (H/V) | Distance (m) | Preamp (dB) | Filter (dB) | EIRP (dBm) | Limit (dBm) | Delta (dB) | Notes |
|---|---|---|---|---|---|---|---|---|---|
| Low Ch, 1851.25 | | | | | | | | | |
| 3702.50 | -17.4 | V | 3.0 | 35.9 | 1.0 | -52.2 | -13.0 | -39.2 | |
| 5553.75 | -16.7 | V | 3.0 | 35.5 | 1.0 | -51.2 | -13.0 | -38.2 | |
| 7405.00 | -14.1 | V | 3.0 | 35.7 | 1.0 | -48.9 | -13.0 | -35.9 | |
| 3702.50 | -17.2 | H | 3.0 | 35.9 | 1.0 | -52.1 | -13.0 | -39.1 | |
| 5553.75 | -15.7 | H | 3.0 | 35.5 | 1.0 | -50.2 | -13.0 | -37.2 | |
| 7405.00 | -13.4 | H | 3.0 | 35.7 | 1.0 | -48.2 | -13.0 | -35.2 | |
| Mid Ch, 1880 | | | | | | | | | |
| 3760.00 | -15.1 | V | 3.0 | 35.8 | 1.0 | -49.9 | -13.0 | -36.9 | |
| 5640.00 | -13.1 | V | 3.0 | 35.5 | 1.0 | -47.6 | -13.0 | -34.6 | |
| 7520.00 | -12.6 | V | 3.0 | 35.7 | 1.0 | -47.4 | -13.0 | -34.4 | |
| 3760.00 | -17.0 | H | 3.0 | 35.8 | 1.0 | -51.8 | -13.0 | -38.8 | |
| 5640.00 | -14.7 | H | 3.0 | 35.5 | 1.0 | -49.2 | -13.0 | -36.2 | |
| 7520.00 | -12.0 | H | 3.0 | 35.7 | 1.0 | -46.8 | -13.0 | -33.8 | |
| High Ch, 1908.75 | | | | | | | | | |
| 3817.50 | -17.2 | V | 3.0 | 35.8 | 1.0 | -51.9 | -13.0 | -38.9 | |
| 5726.25 | -16.0 | V | 3.0 | 35.5 | 1.0 | -50.5 | -13.0 | -37.5 | |
| 7635.00 | -11.3 | V | 3.0 | 35.8 | 1.0 | -46.1 | -13.0 | -33.1 | |
| 3817.50 | -16.7 | H | 3.0 | 35.8 | 1.0 | -51.4 | -13.0 | -38.4 | |
| 5726.25 | -14.6 | H | 3.0 | 35.5 | 1.0 | -49.1 | -13.0 | -36.1 | |
| 7635.00 | -13.3 | H | 3.0 | 35.8 | 1.0 | -48.0 | -13.0 | -35.0 | |


*This report shall not be reproduced except in full, without the written approval of UL Verification Services Inc.*

Band

BC0

**UL Verification Services, Inc.**
**Above 1GHz High Frequency Substitution Measurement**

**Company:** LG Electronics
**Project #:** 15I20514
**Date:** 4/27/2015
**Test Engineer:** A. Escamilla
**Configuration:** EUT, AC Adapter, Headset
**Location:** Chamber C
**Mode:** CDMA EVDO BC0 Harmonics

| f MHz | SG reading (dBm) | Ant. Pol. (H/V) | Distance (m) | Preamp (dB) | Filter (dB) | EIRP (dBm) | Limit (dBm) | Delta (dB) | Notes |
|---|---|---|---|---|---|---|---|---|---|
| Low Ch, 824.7 | | | | | | | | | |
| 1649.40 | -28.0 | V | 3.0 | 37.4 | 1.0 | -64.4 | -13.0 | -51.4 | |
| 2474.10 | -24.8 | V | 3.0 | 36.4 | 1.0 | -60.2 | -13.0 | -47.2 | |
| 3298.80 | -21.6 | V | 3.0 | 35.8 | 1.0 | -56.4 | -13.0 | -43.4 | |
| 1649.40 | -28.8 | H | 3.0 | 37.4 | 1.0 | -65.2 | -13.0 | -52.2 | |
| 2474.10 | -23.3 | H | 3.0 | 36.4 | 1.0 | -58.7 | -13.0 | -45.7 | |
| 3298.80 | -21.2 | H | 3.0 | 35.8 | 1.0 | -56.0 | -13.0 | -43.0 | |
| Mid Ch, 836.52 | | | | | | | | | |
| 1673.04 | -26.0 | V | 3.0 | 37.3 | 1.0 | -62.3 | -13.0 | -49.3 | |
| 2509.56 | -25.9 | V | 3.0 | 36.4 | 1.0 | -61.3 | -13.0 | -48.3 | |
| 3346.08 | -20.5 | V | 3.0 | 35.8 | 1.0 | -55.3 | -13.0 | -42.3 | |
| 1673.04 | -28.0 | H | 3.0 | 37.3 | 1.0 | -64.3 | -13.0 | -51.3 | |
| 2509.56 | -23.4 | H | 3.0 | 36.4 | 1.0 | -58.8 | -13.0 | -45.8 | |
| 3346.08 | -21.9 | H | 3.0 | 35.8 | 1.0 | -56.7 | -13.0 | -43.7 | |
| High Ch, 848.31 | | | | | | | | | |
| 1696.62 | -27.9 | V | 3.0 | 37.3 | 1.0 | -64.2 | -13.0 | -51.2 | |
| 2544.93 | -25.7 | V | 3.0 | 36.3 | 1.0 | -61.0 | -13.0 | -48.0 | |
| 3393.24 | -21.8 | V | 3.0 | 35.7 | 1.0 | -56.5 | -13.0 | -43.5 | |
| 1696.62 | -26.9 | H | 3.0 | 37.3 | 1.0 | -63.2 | -13.0 | -50.2 | |
| 2544.93 | -23.8 | H | 3.0 | 36.3 | 1.0 | -59.1 | -13.0 | -46.1 | |
| 3393.24 | -21.4 | H | 3.0 | 35.7 | 1.0 | -56.1 | -13.0 | -43.1 | |




*This report shall not be reproduced except in full, without the written approval of UL Verification Services Inc.*

Band

BC0

1xRTT

**UL Verification Services, Inc.**
**Above 1GHz High Frequency Substitution Measurement**

**Company:** LG Electronics
**Project #:** 15I20514
**Date:** 4/24/2015
**Test Engineer:** D. Mun
**Configuration:** EUT , AC Adapter, Headset
**Location:** Chamber C
**Mode:** CDMA 1xRTT BC0 Harmonics

| f MHz | SG reading (dBm) | Ant. Pol. (H/V) | Distance (m) | Preamp (dB) | Filter (dB) | EIRP (dBm) | Limit (dBm) | Delta (dB) | Notes |
|---|---|---|---|---|---|---|---|---|---|
| Low Ch, 824.7 | | | | | | | | | |
| 1649.40 | -24.0 | V | 3.0 | 37.4 | 1.0 | -60.4 | -13.0 | -47.4 | |
| 2474.10 | -23.0 | V | 3.0 | 36.4 | 1.0 | -58.4 | -13.0 | -45.4 | |
| 3298.80 | -20.3 | V | 3.0 | 35.8 | 1.0 | -55.1 | -13.0 | -42.1 | |
| 1649.40 | -24.3 | H | 3.0 | 37.4 | 1.0 | -60.7 | -13.0 | -47.7 | |
| 2474.10 | -22.3 | H | 3.0 | 36.4 | 1.0 | -57.7 | -13.0 | -44.7 | |
| 3298.80 | -19.6 | H | 3.0 | 35.8 | 1.0 | -54.4 | -13.0 | -41.4 | |
| Mid Ch, 836.52 | | | | | | | | | |
| 1673.04 | -22.8 | V | 3.0 | 37.3 | 1.0 | -59.1 | -13.0 | -46.1 | |
| 2509.56 | -21.5 | V | 3.0 | 36.4 | 1.0 | -56.9 | -13.0 | -43.9 | |
| 3346.08 | -20.0 | V | 3.0 | 35.8 | 1.0 | -54.8 | -13.0 | -41.8 | |
| 1673.04 | -24.5 | H | 3.0 | 37.3 | 1.0 | -60.8 | -13.0 | -47.8 | |
| 2509.56 | -21.7 | H | 3.0 | 36.4 | 1.0 | -57.1 | -13.0 | -44.1 | |
| 3346.08 | -20.2 | H | 3.0 | 35.8 | 1.0 | -55.0 | -13.0 | -42.0 | |
| High Ch, 848.31 | | | | | | | | | |
| 1696.62 | -23.2 | V | 3.0 | 37.3 | 1.0 | -59.5 | -13.0 | -46.5 | |
| 2544.93 | -21.4 | V | 3.0 | 36.3 | 1.0 | -56.7 | -13.0 | -43.7 | |
| 3393.24 | -18.6 | V | 3.0 | 35.7 | 1.0 | -53.3 | -13.0 | -40.3 | |
| 1696.62 | -23.8 | H | 3.0 | 37.3 | 1.0 | -60.1 | -13.0 | -47.1 | |
| 2544.93 | -20.3 | H | 3.0 | 36.3 | 1.0 | -55.6 | -13.0 | -42.6 | |
| 3393.24 | -19.6 | H | 3.0 | 35.7 | 1.0 | -54.3 | -13.0 | -41.3 | |




*This report shall not be reproduced except in full, without the written approval of UL Verification Services Inc.*

Band

BC10

**UL Verification Services, Inc.**
**Above 1GHz High Frequency Substitution Measurement**

**Company:** LG Electronics
**Project #:** 15I20514
**Date:** 4/27/2015
**Test Engineer:** A. Escamilla
**Configuration:** EUT, AC Adapter, Headset
**Location:** Chamber C
**Mode:** CDMA EVDO BC10 Harmonics

| f MHz | SG reading (dBm) | Ant. Pol. (H/V) | Distance (m) | Preamp (dB) | Filter (dB) | EIRP (dBm) | Limit (dBm) | Delta (dB) | Notes |
|---|---|---|---|---|---|---|---|---|---|
| Low Ch, 817.9MHz | | | | | | | | | |
| 1.636 | -26.4 | V | 3.0 | 37.4 | 1.0 | -62.8 | -13.0 | -49.8 | |
| 2.454 | -22.4 | V | 3.0 | 36.4 | 1.0 | -57.8 | -13.0 | -44.8 | |
| 3.272 | -21.1 | V | 3.0 | 35.8 | 1.0 | -55.9 | -13.0 | -42.9 | |
| 1.636 | -28.8 | H | 3.0 | 37.4 | 1.0 | -65.2 | -13.0 | -52.2 | |
| 2.454 | -23.4 | H | 3.0 | 36.4 | 1.0 | -58.8 | -13.0 | -45.8 | |
| 3.272 | -21.6 | H | 3.0 | 35.8 | 1.0 | -56.4 | -13.0 | -43.4 | |
| Mid Ch, 820.5MHz | | | | | | | | | |
| 1.641 | -24.8 | V | 3.0 | 37.3 | 1.0 | -61.1 | -13.0 | -48.1 | |
| 2.462 | -25.4 | V | 3.0 | 36.4 | 1.0 | -60.8 | -13.0 | -47.8 | |
| 3.282 | -21.5 | V | 3.0 | 35.8 | 1.0 | -56.3 | -13.0 | -43.3 | |
| 1.641 | -28.6 | H | 3.0 | 37.3 | 1.0 | -64.9 | -13.0 | -51.9 | |
| 2.462 | -23.9 | H | 3.0 | 36.4 | 1.0 | -59.3 | -13.0 | -46.3 | |
| 3.282 | -21.5 | H | 3.0 | 35.8 | 1.0 | -56.3 | -13.0 | -43.3 | |
| High Ch, 823.1MHz | | | | | | | | | |
| 1.646 | -24.6 | V | 3.0 | 37.3 | 1.0 | -60.9 | -13.0 | -47.9 | |
| 2.469 | -25.4 | V | 3.0 | 36.3 | 1.0 | -60.7 | -13.0 | -47.7 | |
| 3.292 | -21.1 | V | 3.0 | 35.7 | 1.0 | -55.8 | -13.0 | -42.8 | |
| 1.646 | -28.3 | H | 3.0 | 37.3 | 1.0 | -64.6 | -13.0 | -51.6 | |
| 2.469 | -23.4 | H | 3.0 | 36.3 | 1.0 | -58.7 | -13.0 | -45.7 | |
| 3.292 | -21.2 | H | 3.0 | 35.7 | 1.0 | -55.9 | -13.0 | -42.9 | |


UL VERFICATION SERVICES FORM ID: FCC_22_24_27_90
47173 BENICIA STREET, FREMONT, CA 94538, USA TEL: (510) 771-1000 FAX: (510) 661-0888
*This report shall not be reproduced except in full, without the written approval of UL Verification Services Inc.*

**UL Verification Services, Inc.**
**Above 1GHz High Frequency Substitution Measurement**

**Company:** LG Electronics
**Project #:** 15I20514
**Date:** 4/24/2015
**Test Engineer:** D. Mun
**Configuration:** EUT , AC Adapter, Headset
**Location:** Chamber C
**Mode:** CDMA 1xRTT BC10 Harmonics

Band BC10 1xRTT

| f MHz | SG reading (dBm) | Ant. Pol. (H/V) | Distance (m) | Preamp (dB) | Filter (dB) | EIRP (dBm) | Limit (dBm) | Delta (dB) | Notes |
|---|---|---|---|---|---|---|---|---|---|
| Low Ch, 817.9MHz | | | | | | | | | |
| 1.636 | -23.6 | V | 3.0 | 37.4 | 1.0 | -60.0 | -13.0 | -47.0 | |
| 2.454 | -22.5 | V | 3.0 | 36.4 | 1.0 | -57.9 | -13.0 | -44.9 | |
| 3.272 | -23.8 | V | 3.0 | 35.8 | 1.0 | -58.6 | -13.0 | -45.6 | |
| 1.636 | -25.7 | H | 3.0 | 37.4 | 1.0 | -62.1 | -13.0 | -49.1 | |
| 2.454 | -23.1 | H | 3.0 | 36.4 | 1.0 | -58.5 | -13.0 | -45.5 | |
| 3.272 | -24.8 | H | 3.0 | 35.8 | 1.0 | -59.6 | -13.0 | -46.6 | |
| Mid Ch, 820.5MHz | | | | | | | | | |
| 1.641 | -23.7 | V | 3.0 | 37.3 | 1.0 | -60.0 | -13.0 | -47.0 | |
| 2.462 | -23.9 | V | 3.0 | 36.4 | 1.0 | -59.3 | -13.0 | -46.3 | |
| 3.282 | -23.4 | V | 3.0 | 35.8 | 1.0 | -58.2 | -13.0 | -45.2 | |
| 1.641 | -25.8 | H | 3.0 | 37.3 | 1.0 | -62.1 | -13.0 | -49.1 | |
| 2.462 | -24.1 | H | 3.0 | 36.4 | 1.0 | -59.5 | -13.0 | -46.5 | |
| 3.282 | -24.9 | H | 3.0 | 35.8 | 1.0 | -59.7 | -13.0 | -46.7 | |
| High Ch, 823.1MHz | | | | | | | | | |
| 1.646 | -23.6 | V | 3.0 | 37.3 | 1.0 | -59.9 | -13.0 | -46.9 | |
| 2.469 | -22.8 | V | 3.0 | 36.3 | 1.0 | -58.1 | -13.0 | -45.1 | |
| 3.292 | -20.7 | V | 3.0 | 35.7 | 1.0 | -55.4 | -13.0 | -42.4 | |
| 1.646 | -24.8 | H | 3.0 | 37.3 | 1.0 | -61.1 | -13.0 | -48.1 | |
| 2.469 | -21.8 | H | 3.0 | 36.3 | 1.0 | -57.1 | -13.0 | -44.1 | |
| 3.292 | -22.0 | H | 3.0 | 35.7 | 1.0 | -56.7 | -13.0 | -43.7 | |


*This report shall not be reproduced except in full, without the written approval of UL Verification Services Inc.*

## LTE Band 2

**UL Verification Services, Inc.**
**Above 1GHz High Frequency Substitution Measurement**

**Company:** LG
**Project #:** 15I20514
**Date:** 4/23/2015
**Test Engineer:** Angel Escamilla
**Configuration:** X-pos EUT, Ac Charger, Headset
**Location:** Chamber C
**Mode:** LTE_16QAM Band 2 Harmonics, 20MHz Bandwidth

Band LTE2 20MHz 16QAM

| f MHz | SG reading (dBm) | Ant. Pol. (H/V) | Distance (m) | Preamp (dB) | Filter (dB) | EIRP (dBm) | Limit (dBm) | Delta (dB) | Notes |
|---|---|---|---|---|---|---|---|---|---|
| Low Ch, 1860 | | | | | | | | | |
| 3720.00 | -20.5 | V | 3.0 | 35.8 | 1.0 | -55.3 | -13.0 | -42.3 | |
| 5580.00 | -15.3 | V | 3.0 | 35.5 | 1.0 | -49.8 | -13.0 | -36.8 | |
| 7440.00 | -11.1 | V | 3.0 | 35.7 | 1.0 | -45.8 | -13.0 | -32.8 | |
| 3720.00 | -21.1 | H | 3.0 | 35.8 | 1.0 | -56.0 | -13.0 | -43.0 | |
| 5580.00 | -11.7 | H | 3.0 | 35.5 | 1.0 | -46.2 | -13.0 | -33.2 | |
| 7440.00 | -11.7 | H | 3.0 | 35.7 | 1.0 | -46.4 | -13.0 | -33.4 | |
| Mid Ch, 1880 | | | | | | | | | |
| 3760.00 | -19.6 | V | 3.0 | 35.8 | 1.0 | -54.4 | -13.0 | -41.4 | |
| 5640.00 | -16.7 | V | 3.0 | 35.5 | 1.0 | -51.1 | -13.0 | -38.1 | |
| 7520.00 | -10.9 | V | 3.0 | 35.7 | 1.0 | -45.7 | -13.0 | -32.7 | |
| 3760.00 | -20.6 | H | 3.0 | 35.8 | 1.0 | -55.4 | -13.0 | -42.4 | |
| 5640.00 | -16.9 | H | 3.0 | 35.5 | 1.0 | -51.4 | -13.0 | -38.4 | |
| 7520.00 | -9.9 | H | 3.0 | 35.7 | 1.0 | -44.7 | -13.0 | -31.7 | |
| High Ch, 1900 | | | | | | | | | |
| 3800.00 | -18.8 | V | 3.0 | 35.8 | 1.0 | -53.6 | -13.0 | -40.6 | |
| 5700.00 | -15.5 | V | 3.0 | 35.5 | 1.0 | -50.0 | -13.0 | -37.0 | |
| 7600.00 | -11.9 | V | 3.0 | 35.8 | 1.0 | -46.7 | -13.0 | -33.7 | |
| 3800.00 | -20.4 | H | 3.0 | 35.8 | 1.0 | -55.2 | -13.0 | -42.2 | |
| 5700.00 | -14.9 | H | 3.0 | 35.5 | 1.0 | -49.4 | -13.0 | -36.4 | |
| 7600.00 | -12.6 | H | 3.0 | 35.8 | 1.0 | -47.4 | -13.0 | -34.4 | |


UL VERFICATION SERVICES FORM ID: FCC_22_24_27_90
47173 BENICIA STREET, FREMONT, CA 94538, USA TEL: (510) 771-1000 FAX: (510) 661-0888
*This report shall not be reproduced except in full, without the written approval of UL Verification Services Inc.*

**UL Verification Services, Inc.**
**Above 1GHz High Frequency Substitution Measurement**

**Company:** LG
**Project #:** 15I20514
**Date:** 4/23/2015
**Test Engineer:** Angel Escamilla
**Configuration:** X-pos EUT, Ac Charger, Headset
**Location:** Chamber C
**Mode:** LTE_QPSK Band 2 Harmonics, 20MHz Bandwidth

Band LTE2 20MHz QPSK

| f MHz | SG reading (dBm) | Ant. Pol. (H/V) | Distance (m) | Preamp (dB) | Filter (dB) | EIRP (dBm) | Limit (dBm) | Delta (dB) | Notes |
|---|---|---|---|---|---|---|---|---|---|
| Low Ch, 1860 | | | | | | | | | |
| 3720.00 | -20.3 | V | 3.0 | 35.8 | 1.0 | -55.2 | -13.0 | -42.2 | |
| 5580.00 | -15.6 | V | 3.0 | 35.5 | 1.0 | -50.1 | -13.0 | -37.1 | |
| 7440.00 | -10.8 | V | 3.0 | 35.7 | 1.0 | -45.5 | -13.0 | -32.5 | |
| 3720.00 | -21.3 | H | 3.0 | 35.8 | 1.0 | -56.2 | -13.0 | -43.2 | |
| 5580.00 | -12.9 | H | 3.0 | 35.5 | 1.0 | -47.4 | -13.0 | -34.4 | |
| 7440.00 | -11.5 | H | 3.0 | 35.7 | 1.0 | -46.3 | -13.0 | -33.3 | |
| Mid Ch, 1880 | | | | | | | | | |
| 3760.00 | -18.0 | V | 3.0 | 35.8 | 1.0 | -52.8 | -13.0 | -39.8 | |
| 5640.00 | -15.1 | V | 3.0 | 35.5 | 1.0 | -49.6 | -13.0 | -36.6 | |
| 7520.00 | -11.3 | V | 3.0 | 35.7 | 1.0 | -46.0 | -13.0 | -33.0 | |
| 3760.00 | -18.7 | H | 3.0 | 35.8 | 1.0 | -53.5 | -13.0 | -40.5 | |
| 5640.00 | -16.6 | H | 3.0 | 35.5 | 1.0 | -51.1 | -13.0 | -38.1 | |
| 7520.00 | -10.4 | H | 3.0 | 35.7 | 1.0 | -45.2 | -13.0 | -32.2 | |
| High Ch, 1900 | | | | | | | | | |
| 3800.00 | -19.7 | V | 3.0 | 35.8 | 1.0 | -54.5 | -13.0 | -41.5 | |
| 5700.00 | -15.1 | V | 3.0 | 35.5 | 1.0 | -49.6 | -13.0 | -36.6 | |
| 7600.00 | -11.3 | V | 3.0 | 35.8 | 1.0 | -46.1 | -13.0 | -33.1 | |
| 3800.00 | -20.8 | H | 3.0 | 35.8 | 1.0 | -55.6 | -13.0 | -42.6 | |
| 5700.00 | -15.3 | H | 3.0 | 35.5 | 1.0 | -49.8 | -13.0 | -36.8 | |
| 7600.00 | -12.2 | H | 3.0 | 35.8 | 1.0 | -47.0 | -13.0 | -34.0 | |


UL VERFICATION SERVICES FORM ID: FCC_22_24_27_90
47173 BENICIA STREET, FREMONT, CA 94538, USA TEL: (510) 771-1000 FAX: (510) 661-0888
*This report shall not be reproduced except in full, without the written approval of UL Verification Services Inc.*

Band

LTE2

15MHz

16QAM

**UL Verification Services, Inc.**
**Above 1GHz High Frequency Substitution Measurement**

**Company:** LG
**Project #:** 15I20514
**Date:** 4/23/2015
**Test Engineer:** Angel Escamilla
**Configuration:** X-pos EUT, Ac Charger, Headset
**Location:** Chamber C
**Mode:** LTE_16QAM Band 2 Harmonics, 15MHz Bandwidth

| f MHz | SG reading (dBm) | Ant. Pol. (H/V) | Distance (m) | Preamp (dB) | Filter (dB) | EIRP (dBm) | Limit (dBm) | Delta (dB) | Notes |
|---|---|---|---|---|---|---|---|---|---|
| Low Ch, 1857.5 | | | | | | | | | |
| 3715.00 | -21.3 | V | 3.0 | 35.8 | 1.0 | -56.1 | -13.0 | -43.1 | |
| 5572.50 | -16.8 | V | 3.0 | 35.5 | 1.0 | -51.3 | -13.0 | -38.3 | |
| 7430.00 | -13.5 | V | 3.0 | 35.7 | 1.0 | -48.2 | -13.0 | -35.2 | |
| 3715.00 | -21.6 | H | 3.0 | 35.8 | 1.0 | -56.4 | -13.0 | -43.4 | |
| 5572.50 | -15.5 | H | 3.0 | 35.5 | 1.0 | -49.9 | -13.0 | -36.9 | |
| 7430.00 | -12.4 | H | 3.0 | 35.7 | 1.0 | -47.1 | -13.0 | -34.1 | |
| Mid Ch, 1880 | | | | | | | | | |
| 3760.00 | -20.5 | V | 3.0 | 35.8 | 1.0 | -55.3 | -13.0 | -42.3 | |
| 5640.00 | -14.2 | V | 3.0 | 35.5 | 1.0 | -48.7 | -13.0 | -35.7 | |
| 7520.00 | -13.5 | V | 3.0 | 35.7 | 1.0 | -48.2 | -13.0 | -35.2 | |
| 3760.00 | -20.7 | H | 3.0 | 35.8 | 1.0 | -55.5 | -13.0 | -42.5 | |
| 5640.00 | -16.5 | H | 3.0 | 35.5 | 1.0 | -50.9 | -13.0 | -37.9 | |
| 7520.00 | -10.1 | H | 3.0 | 35.7 | 1.0 | -44.8 | -13.0 | -31.8 | |
| High Ch, 1902.5 | | | | | | | | | |
| 3805.00 | -21.1 | V | 3.0 | 35.8 | 1.0 | -55.8 | -13.0 | -42.8 | |
| 5707.50 | -12.6 | V | 3.0 | 35.5 | 1.0 | -47.1 | -13.0 | -34.1 | |
| 7610.00 | -11.8 | V | 3.0 | 35.8 | 1.0 | -46.6 | -13.0 | -33.6 | |
| 3805.00 | -21.4 | H | 3.0 | 35.8 | 1.0 | -56.2 | -13.0 | -43.2 | |
| 5707.50 | -14.8 | H | 3.0 | 35.5 | 1.0 | -49.3 | -13.0 | -36.3 | |
| 7610.00 | -13.0 | H | 3.0 | 35.8 | 1.0 | -47.7 | -13.0 | -34.7 | |




*This report shall not be reproduced except in full, without the written approval of UL Verification Services Inc.*

Band

LTE2

15MHz

QPSK

**UL Verification Services, Inc.**
**Above 1GHz High Frequency Substitution Measurement**

**Company:** LG
**Project #:** 15I20514
**Date:** 4/23/2015
**Test Engineer:** Angel Escamilla
**Configuration:** X-pos EUT, Ac Charger, Headset
**Location:** Chamber C
**Mode:** LTE_QPSK Band 2 Harmonics, 15MHz Bandwidth

| f MHz | SG reading (dBm) | Ant. Pol. (H/V) | Distance (m) | Preamp (dB) | Filter (dB) | EIRP (dBm) | Limit (dBm) | Delta (dB) | Notes |
|---|---|---|---|---|---|---|---|---|---|
| Low Ch, 1857.5 | | | | | | | | | |
| 3715.00 | -20.8 | V | 3.0 | 35.8 | 1.0 | -55.6 | -13.0 | -42.6 | |
| 5572.50 | -16.3 | V | 3.0 | 35.5 | 1.0 | -50.8 | -13.0 | -37.8 | |
| 7430.00 | -13.0 | V | 3.0 | 35.7 | 1.0 | -47.8 | -13.0 | -34.8 | |
| 3715.00 | -21.3 | H | 3.0 | 35.8 | 1.0 | -56.2 | -13.0 | -43.2 | |
| 5572.50 | -13.8 | H | 3.0 | 35.5 | 1.0 | -48.3 | -13.0 | -35.3 | |
| 7430.00 | -12.4 | H | 3.0 | 35.7 | 1.0 | -47.1 | -13.0 | -34.1 | |
| Mid Ch, 1880 | | | | | | | | | |
| 3760.00 | -20.3 | V | 3.0 | 35.8 | 1.0 | -55.1 | -13.0 | -42.1 | |
| 5640.00 | -15.8 | V | 3.0 | 35.5 | 1.0 | -50.3 | -13.0 | -37.3 | |
| 7520.00 | -12.4 | V | 3.0 | 35.7 | 1.0 | -47.2 | -13.0 | -34.2 | |
| 3760.00 | -20.5 | H | 3.0 | 35.8 | 1.0 | -55.3 | -13.0 | -42.3 | |
| 5640.00 | -16.1 | H | 3.0 | 35.5 | 1.0 | -50.6 | -13.0 | -37.6 | |
| 7520.00 | -11.0 | H | 3.0 | 35.7 | 1.0 | -45.7 | -13.0 | -32.7 | |
| High Ch, 1902.5 | | | | | | | | | |
| 3805.00 | -19.7 | V | 3.0 | 35.8 | 1.0 | -54.4 | -13.0 | -41.4 | |
| 5707.50 | -12.5 | V | 3.0 | 35.5 | 1.0 | -47.0 | -13.0 | -34.0 | |
| 7610.00 | -12.0 | V | 3.0 | 35.8 | 1.0 | -46.7 | -13.0 | -33.7 | |
| 3805.00 | -21.5 | H | 3.0 | 35.8 | 1.0 | -56.3 | -13.0 | -43.3 | |
| 5707.50 | -14.0 | H | 3.0 | 35.5 | 1.0 | -48.5 | -13.0 | -35.5 | |
| 7610.00 | -12.6 | H | 3.0 | 35.8 | 1.0 | -47.3 | -13.0 | -34.3 | |



UL VERFICATION SERVICES FORM ID: FCC_22_24_27_90
47173 BENICIA STREET, FREMONT, CA 94538, USA TEL: (510) 771-1000 FAX: (510) 661-0888

*This report shall not be reproduced except in full, without the written approval of UL Verification Services Inc.*

**UL Verification Services, Inc.**
**Above 1GHz High Frequency Substitution Measurement**

**Company:** LG
**Project #:** 15I20514
**Date:** 4/23/2015
**Test Engineer:** Angel Escamilla
**Configuration:** X-pos EUT, Ac Charger, Headset
**Location:** Chamber C
**Mode:** LTE_16QAM Band 2 Harmonics, 10MHz Bandwidth

Band
LTE2
10MHz
16QAM

| f MHz | SG reading (dBm) | Ant. Pol. (H/V) | Distance (m) | Preamp (dB) | Filter (dB) | EIRP (dBm) | Limit (dBm) | Delta (dB) | Notes |
|---|---|---|---|---|---|---|---|---|---|
| Low Ch, 1855 | | | | | | | | | |
| 3710.00 | -21.4 | V | 3.0 | 35.9 | 1.0 | -56.2 | -13.0 | -43.2 | |
| 5565.00 | -14.4 | V | 3.0 | 35.5 | 1.0 | -48.9 | -13.0 | -35.9 | |
| 7420.00 | -13.7 | V | 3.0 | 35.7 | 1.0 | -48.4 | -13.0 | -35.4 | |
| 3710.00 | -20.1 | H | 3.0 | 35.9 | 1.0 | -55.0 | -13.0 | -42.0 | |
| 5565.00 | -14.0 | H | 3.0 | 35.5 | 1.0 | -48.5 | -13.0 | -35.5 | |
| 7420.00 | -13.4 | H | 3.0 | 35.7 | 1.0 | -48.1 | -13.0 | -35.1 | |
| Mid Ch, 1880 | | | | | | | | | |
| 3760.00 | -21.4 | V | 3.0 | 35.8 | 1.0 | -56.3 | -13.0 | -43.3 | |
| 5640.00 | -16.7 | V | 3.0 | 35.5 | 1.0 | -51.2 | -13.0 | -38.2 | |
| 7520.00 | -10.9 | V | 3.0 | 35.7 | 1.0 | -45.7 | -13.0 | -32.7 | |
| 3760.00 | -21.2 | H | 3.0 | 35.8 | 1.0 | -56.1 | -13.0 | -43.1 | |
| 5640.00 | -16.5 | H | 3.0 | 35.5 | 1.0 | -51.0 | -13.0 | -38.0 | |
| 7520.00 | -13.2 | H | 3.0 | 35.7 | 1.0 | -48.0 | -13.0 | -35.0 | |
| High Ch, 1905 | | | | | | | | | |
| 3810.00 | -20.8 | V | 3.0 | 35.8 | 1.0 | -55.6 | -13.0 | -42.6 | |
| 5715.00 | -15.7 | V | 3.0 | 35.5 | 1.0 | -50.2 | -13.0 | -37.2 | |
| 7620.00 | -10.6 | V | 3.0 | 35.8 | 1.0 | -45.4 | -13.0 | -32.4 | |
| 3810.00 | -20.8 | H | 3.0 | 35.8 | 1.0 | -55.6 | -13.0 | -42.6 | |
| 5715.00 | -16.6 | H | 3.0 | 35.5 | 1.0 | -51.1 | -13.0 | -38.1 | |
| 7620.00 | -12.2 | H | 3.0 | 35.8 | 1.0 | -46.9 | -13.0 | -33.9 | |


UL VERFICATION SERVICES FORM ID: FCC_22_24_27_90
47173 BENICIA STREET, FREMONT, CA 94538, USA TEL: (510) 771-1000 FAX: (510) 661-0888
*This report shall not be reproduced except in full, without the written approval of UL Verification Services Inc.*

**UL Verification Services, Inc.**
**Above 1GHz High Frequency Substitution Measurement**

**Company:** LG
**Project #:** 15I20514
**Date:** 4/23/2015
**Test Engineer:** Angel Escamilla
**Configuration:** X-pos EUT, Ac Charger, Headset
**Location:** Chamber C
**Mode:** LTE_QPSK Band 2 Harmonics, 10MHz Bandwidth

Band
LTE2
10MHz
QPSK

| f MHz | SG reading (dBm) | Ant. Pol. (H/V) | Distance (m) | Preamp (dB) | Filter (dB) | EIRP (dBm) | Limit (dBm) | Delta (dB) | Notes |
|---|---|---|---|---|---|---|---|---|---|
| Low Ch, 1855 | | | | | | | | | |
| 3710.00 | -21.1 | V | 3.0 | 35.9 | 1.0 | -56.0 | -13.0 | -43.0 | |
| 5565.00 | -14.3 | V | 3.0 | 35.5 | 1.0 | -48.8 | -13.0 | -35.8 | |
| 7420.00 | -13.6 | V | 3.0 | 35.7 | 1.0 | -48.3 | -13.0 | -35.3 | |
| 3710.00 | -19.5 | H | 3.0 | 35.9 | 1.0 | -54.3 | -13.0 | -41.3 | |
| 5565.00 | -12.7 | H | 3.0 | 35.5 | 1.0 | -47.2 | -13.0 | -34.2 | |
| 7420.00 | -12.3 | H | 3.0 | 35.7 | 1.0 | -47.1 | -13.0 | -34.1 | |
| Mid Ch, 1880 | | | | | | | | | |
| 3760.00 | -21.3 | V | 3.0 | 35.8 | 1.0 | -56.2 | -13.0 | -43.2 | |
| 5640.00 | -17.0 | V | 3.0 | 35.5 | 1.0 | -51.5 | -13.0 | -38.5 | |
| 7520.00 | -10.6 | V | 3.0 | 35.7 | 1.0 | -45.3 | -13.0 | -32.3 | |
| 3760.00 | -20.4 | H | 3.0 | 35.8 | 1.0 | -55.2 | -13.0 | -42.2 | |
| 5640.00 | -16.6 | H | 3.0 | 35.5 | 1.0 | -51.1 | -13.0 | -38.1 | |
| 7520.00 | -13.4 | H | 3.0 | 35.7 | 1.0 | -48.1 | -13.0 | -35.1 | |
| High Ch, 1905 | | | | | | | | | |
| 3810.00 | -20.4 | V | 3.0 | 35.8 | 1.0 | -55.2 | -13.0 | -42.2 | |
| 5715.00 | -16.4 | V | 3.0 | 35.5 | 1.0 | -50.9 | -13.0 | -37.9 | |
| 7620.00 | -11.3 | V | 3.0 | 35.8 | 1.0 | -46.1 | -13.0 | -33.1 | |
| 3810.00 | -21.0 | H | 3.0 | 35.8 | 1.0 | -55.8 | -13.0 | -42.8 | |
| 5715.00 | -15.7 | H | 3.0 | 35.5 | 1.0 | -50.2 | -13.0 | -37.2 | |
| 7620.00 | -12.8 | H | 3.0 | 35.8 | 1.0 | -47.6 | -13.0 | -34.6 | |


UL VERFICATION SERVICES FORM ID: FCC_22_24_27_90
47173 BENICIA STREET, FREMONT, CA 94538, USA TEL: (510) 771-1000 FAX: (510) 661-0888
*This report shall not be reproduced except in full, without the written approval of UL Verification Services Inc.*

Band

LTE2

5MHz

16QAM

**UL Verification Services, Inc.**
**Above 1GHz High Frequency Substitution Measurement**

**Company:** LG
**Project #:** 15I20514
**Date:** 4/23/2015
**Test Engineer:** Angel Escamilla
**Configuration:** X-pos EUT, Ac Charger, Headset
**Location:** Chamber C
**Mode:** LTE_16QAM Band 2 Harmonics, 5MHz Bandwidth

| f MHz | SG reading (dBm) | Ant. Pol. (H/V) | Distance (m) | Preamp (dB) | Filter (dB) | EIRP (dBm) | Limit (dBm) | Delta (dB) | Notes |
|---|---|---|---|---|---|---|---|---|---|
| Low Ch, 1852.5 | | | | | | | | | |
| 3705.00 | -21.1 | V | 3.0 | 35.9 | 1.0 | -55.9 | -13.0 | -42.9 | |
| 5557.50 | -16.9 | V | 3.0 | 35.5 | 1.0 | -51.4 | -13.0 | -38.4 | |
| 7410.00 | -13.6 | V | 3.0 | 35.7 | 1.0 | -48.3 | -13.0 | -35.3 | |
| 3705.00 | -18.4 | H | 3.0 | 35.9 | 1.0 | -53.2 | -13.0 | -40.2 | |
| 5557.50 | -15.6 | H | 3.0 | 35.5 | 1.0 | -50.1 | -13.0 | -37.1 | |
| 7410.00 | -13.2 | H | 3.0 | 35.7 | 1.0 | -48.0 | -13.0 | -35.0 | |
| Mid Ch, 1880 | | | | | | | | | |
| 3760.00 | -21.3 | V | 3.0 | 35.8 | 1.0 | -56.1 | -13.0 | -43.1 | |
| 5640.00 | -17.2 | V | 3.0 | 35.5 | 1.0 | -51.7 | -13.0 | -38.7 | |
| 7520.00 | -11.5 | V | 3.0 | 35.7 | 1.0 | -46.3 | -13.0 | -33.3 | |
| 3760.00 | -21.7 | H | 3.0 | 35.8 | 1.0 | -56.5 | -13.0 | -43.5 | |
| 5640.00 | -17.0 | H | 3.0 | 35.5 | 1.0 | -51.5 | -13.0 | -38.5 | |
| 7520.00 | -12.9 | H | 3.0 | 35.7 | 1.0 | -47.6 | -13.0 | -34.6 | |
| High Ch, 1907.5 | | | | | | | | | |
| 3815.00 | -18.3 | V | 3.0 | 35.8 | 1.0 | -53.0 | -13.0 | -40.0 | |
| 5722.50 | -15.6 | V | 3.0 | 35.5 | 1.0 | -50.1 | -13.0 | -37.1 | |
| 7630.00 | -10.1 | V | 3.0 | 35.8 | 1.0 | -44.9 | -13.0 | -31.9 | |
| 3815.00 | -21.2 | H | 3.0 | 35.8 | 1.0 | -55.9 | -13.0 | -42.9 | |
| 5722.50 | -14.4 | H | 3.0 | 35.5 | 1.0 | -48.9 | -13.0 | -35.9 | |
| 7630.00 | -13.0 | H | 3.0 | 35.8 | 1.0 | -47.7 | -13.0 | -34.7 | |



UL VERFICATION SERVICES FORM ID: FCC_22_24_27_90
47173 BENICIA STREET, FREMONT, CA 94538, USA TEL: (510) 771-1000 FAX: (510) 661-0888

*This report shall not be reproduced except in full, without the written approval of UL Verification Services Inc.*

**UL Verification Services, Inc.**
**Above 1GHz High Frequency Substitution Measurement**

**Company:** LG
**Project #:** 15I20514
**Date:** 4/23/2015
**Test Engineer:** Angel Escamilla
**Configuration:** X-pos EUT, Ac Charger, Headset
**Location:** Chamber C
**Mode:** LTE_QPSK Band 2 Harmonics, 5MHz Bandwidth

Band
LTE2
5MHz
QPSK

| f MHz | SG reading (dBm) | Ant. Pol. (H/V) | Distance (m) | Preamp (dB) | Filter (dB) | EIRP (dBm) | Limit (dBm) | Delta (dB) | Notes |
|---|---|---|---|---|---|---|---|---|---|
| Low Ch, 1852.5 | | | | | | | | | |
| 3705.00 | -20.7 | V | 3.0 | 35.9 | 1.0 | -55.5 | -13.0 | -42.5 | |
| 5557.50 | -16.8 | V | 3.0 | 35.5 | 1.0 | -51.3 | -13.0 | -38.3 | |
| 7410.00 | -13.9 | V | 3.0 | 35.7 | 1.0 | -48.6 | -13.0 | -35.6 | |
| 3705.00 | -18.5 | H | 3.0 | 35.9 | 1.0 | -53.3 | -13.0 | -40.3 | |
| 5557.50 | -14.6 | H | 3.0 | 35.5 | 1.0 | -49.0 | -13.0 | -36.0 | |
| 7410.00 | -12.6 | H | 3.0 | 35.7 | 1.0 | -47.3 | -13.0 | -34.3 | |
| Mid Ch, 1880 | | | | | | | | | |
| 3760.00 | -20.4 | V | 3.0 | 35.8 | 1.0 | -55.2 | -13.0 | -42.2 | |
| 5640.00 | -16.8 | V | 3.0 | 35.5 | 1.0 | -51.3 | -13.0 | -38.3 | |
| 7520.00 | -12.5 | V | 3.0 | 35.7 | 1.0 | -47.2 | -13.0 | -34.2 | |
| 3760.00 | -20.6 | H | 3.0 | 35.8 | 1.0 | -55.5 | -13.0 | -42.5 | |
| 5640.00 | -17.1 | H | 3.0 | 35.5 | 1.0 | -51.6 | -13.0 | -38.6 | |
| 7520.00 | -13.0 | H | 3.0 | 35.7 | 1.0 | -47.7 | -13.0 | -34.7 | |
| High Ch, 1907.5 | | | | | | | | | |
| 3815.00 | -18.6 | V | 3.0 | 35.8 | 1.0 | -53.4 | -13.0 | -40.4 | |
| 5722.50 | -14.0 | V | 3.0 | 35.5 | 1.0 | -48.5 | -13.0 | -35.5 | |
| 7630.00 | -14.8 | V | 3.0 | 35.8 | 1.0 | -49.6 | -13.0 | -36.6 | |
| 3815.00 | -20.3 | H | 3.0 | 35.8 | 1.0 | -55.1 | -13.0 | -42.1 | |
| 5722.50 | -14.7 | H | 3.0 | 35.5 | 1.0 | -49.2 | -13.0 | -36.2 | |
| 7630.00 | -11.0 | H | 3.0 | 35.8 | 1.0 | -45.8 | -13.0 | -32.8 | |


UL VERFICATION SERVICES FORM ID: FCC_22_24_27_90
47173 BENICIA STREET, FREMONT, CA 94538, USA TEL: (510) 771-1000 FAX: (510) 661-0888
*This report shall not be reproduced except in full, without the written approval of UL Verification Services Inc.*

**UL Verification Services, Inc.**
**Above 1GHz High Frequency Substitution Measurement**

**Company:** LG
**Project #:** 15I20514
**Date:** 4/23/2015
**Test Engineer:** Angel Escamilla
**Configuration:** X-pos EUT, Ac Charger, Headset
**Location:** Chamber C
**Mode:** LTE_16QAM Band 2 Harmonics, 3MHz Bandwidth

Band
LTE2
3MHz
16QAM

| f MHz | SG reading (dBm) | Ant. Pol. (H/V) | Distance (m) | Preamp (dB) | Filter (dB) | EIRP (dBm) | Limit (dBm) | Delta (dB) | Notes |
|---|---|---|---|---|---|---|---|---|---|
| Low Ch, 1851.5 | | | | | | | | | |
| 3703.00 | -19.7 | V | 3.0 | 35.9 | 1.0 | -54.5 | -13.0 | -41.5 | |
| 5554.50 | -15.9 | V | 3.0 | 35.5 | 1.0 | -50.3 | -13.0 | -37.3 | |
| 7406.00 | -13.6 | V | 3.0 | 35.7 | 1.0 | -48.3 | -13.0 | -35.3 | |
| 3703.00 | -14.9 | H | 3.0 | 35.9 | 1.0 | -49.7 | -13.0 | -36.7 | |
| 5554.50 | -16.6 | H | 3.0 | 35.5 | 1.0 | -51.1 | -13.0 | -38.1 | |
| 7406.00 | -12.9 | H | 3.0 | 35.7 | 1.0 | -47.6 | -13.0 | -34.6 | |
| Mid Ch, 1880 | | | | | | | | | |
| 3760.00 | -20.7 | V | 3.0 | 35.8 | 1.0 | -55.5 | -13.0 | -42.5 | |
| 5640.00 | -17.1 | V | 3.0 | 35.5 | 1.0 | -51.6 | -13.0 | -38.6 | |
| 7520.00 | -13.5 | V | 3.0 | 35.7 | 1.0 | -48.3 | -13.0 | -35.3 | |
| 3760.00 | -21.7 | H | 3.0 | 35.8 | 1.0 | -56.6 | -13.0 | -43.6 | |
| 5640.00 | -17.1 | H | 3.0 | 35.5 | 1.0 | -51.6 | -13.0 | -38.6 | |
| 7520.00 | -12.7 | H | 3.0 | 35.7 | 1.0 | -47.5 | -13.0 | -34.5 | |
| High Ch, 1908.5 | | | | | | | | | |
| 3817.00 | -19.7 | V | 3.0 | 35.8 | 1.0 | -54.5 | -13.0 | -41.5 | |
| 5725.50 | -16.4 | V | 3.0 | 35.5 | 1.0 | -50.9 | -13.0 | -37.9 | |
| 7634.00 | -11.4 | V | 3.0 | 35.8 | 1.0 | -46.2 | -13.0 | -33.2 | |
| 3817.00 | -20.3 | H | 3.0 | 35.8 | 1.0 | -55.0 | -13.0 | -42.0 | |
| 5725.50 | -16.1 | H | 3.0 | 35.5 | 1.0 | -50.6 | -13.0 | -37.6 | |
| 7634.00 | -11.6 | H | 3.0 | 35.8 | 1.0 | -46.4 | -13.0 | -33.4 | |


UL VERFICATION SERVICES FORM ID: FCC_22_24_27_90
47173 BENICIA STREET, FREMONT, CA 94538, USA TEL: (510) 771-1000 FAX: (510) 661-0888
*This report shall not be reproduced except in full, without the written approval of UL Verification Services Inc.*

Band

LTE2

3MHz

QPSK

**UL Verification Services, Inc.**
**Above 1GHz High Frequency Substitution Measurement**

**Company:** LG
**Project #:** 15I20514
**Date:** 4/23/2015
**Test Engineer:** Angel Escamilla
**Configuration:** X-pos EUT, Ac Charger, Headset
**Location:** Chamber C
**Mode:** LTE_QPSK Band 2 Harmonics, 3MHz Bandwidth

| f MHz | SG reading (dBm) | Ant. Pol. (H/V) | Distance (m) | Preamp (dB) | Filter (dB) | EIRP (dBm) | Limit (dBm) | Delta (dB) | Notes |
|---|---|---|---|---|---|---|---|---|---|
| Low Ch, 1851.5 | | | | | | | | | |
| 3703.00 | -18.8 | V | 3.0 | 35.9 | 1.0 | -53.7 | -13.0 | -40.7 | |
| 5554.50 | -16.4 | V | 3.0 | 35.5 | 1.0 | -50.8 | -13.0 | -37.8 | |
| 7406.00 | -12.8 | V | 3.0 | 35.7 | 1.0 | -47.6 | -13.0 | -34.6 | |
| 3703.00 | -16.1 | H | 3.0 | 35.9 | 1.0 | -50.9 | -13.0 | -37.9 | |
| 5554.50 | -17.0 | H | 3.0 | 35.5 | 1.0 | -51.5 | -13.0 | -38.5 | |
| 7406.00 | -13.4 | H | 3.0 | 35.7 | 1.0 | -48.1 | -13.0 | -35.1 | |
| Mid Ch, 1880 | | | | | | | | | |
| 3760.00 | -20.3 | V | 3.0 | 35.8 | 1.0 | -55.1 | -13.0 | -42.1 | |
| 5640.00 | -17.2 | V | 3.0 | 35.5 | 1.0 | -51.7 | -13.0 | -38.7 | |
| 7520.00 | -13.1 | V | 3.0 | 35.7 | 1.0 | -47.8 | -13.0 | -34.8 | |
| 3760.00 | -21.1 | H | 3.0 | 35.8 | 1.0 | -55.9 | -13.0 | -42.9 | |
| 5640.00 | -16.7 | H | 3.0 | 35.5 | 1.0 | -51.2 | -13.0 | -38.2 | |
| 7520.00 | -12.5 | H | 3.0 | 35.7 | 1.0 | -47.3 | -13.0 | -34.3 | |
| High Ch, 1908.5 | | | | | | | | | |
| 3817.00 | -18.3 | V | 3.0 | 35.8 | 1.0 | -53.1 | -13.0 | -40.1 | |
| 5725.50 | -15.0 | V | 3.0 | 35.5 | 1.0 | -49.5 | -13.0 | -36.5 | |
| 7634.00 | -11.3 | V | 3.0 | 35.8 | 1.0 | -46.0 | -13.0 | -33.0 | |
| 3817.00 | -20.7 | H | 3.0 | 35.8 | 1.0 | -55.5 | -13.0 | -42.5 | |
| 5725.50 | -14.9 | H | 3.0 | 35.5 | 1.0 | -49.4 | -13.0 | -36.4 | |
| 7634.00 | -12.8 | H | 3.0 | 35.8 | 1.0 | -47.5 | -13.0 | -34.5 | |



UL VERFICATION SERVICES FORM ID: FCC_22_24_27_90
47173 BENICIA STREET, FREMONT, CA 94538, USA TEL: (510) 771-1000 FAX: (510) 661-0888

*This report shall not be reproduced except in full, without the written approval of UL Verification Services Inc.*

**UL Verification Services, Inc.**
**Above 1GHz High Frequency Substitution Measurement**

**Company:** LG
**Project #:** 15I20514
**Date:** 4/23/2015
**Test Engineer:** Angel Escamilla
**Configuration:** X-pos EUT, Ac Charger, Headset
**Location:** Chamber C
**Mode:** LTE_16QAM Band 2 Harmonics, 1.4MHz Bandwidth

Band
LTE2
1.4MHz
16QAM

| f MHz | SG reading (dBm) | Ant. Pol. (H/V) | Distance (m) | Preamp (dB) | Filter (dB) | EIRP (dBm) | Limit (dBm) | Delta (dB) | Notes |
|---|---|---|---|---|---|---|---|---|---|
| Low Ch, 1850.7 | | | | | | | | | |
| 3701.40 | -21.1 | V | 3.0 | 35.9 | 1.0 | -55.9 | -13.0 | -42.9 | |
| 5552.10 | -15.4 | V | 3.0 | 35.5 | 1.0 | -49.8 | -13.0 | -36.8 | |
| 7402.80 | -14.2 | V | 3.0 | 35.7 | 1.0 | -49.0 | -13.0 | -36.0 | |
| 3701.40 | -17.9 | H | 3.0 | 35.9 | 1.0 | -52.8 | -13.0 | -39.8 | |
| 5552.10 | -14.5 | H | 3.0 | 35.5 | 1.0 | -49.0 | -13.0 | -36.0 | |
| 7402.80 | -11.2 | H | 3.0 | 35.7 | 1.0 | -45.9 | -13.0 | -32.9 | |
| Mid Ch, 1880 | | | | | | | | | |
| 3760.00 | -21.5 | V | 3.0 | 35.8 | 1.0 | -44.7 | -13.0 | -31.7 | |
| 5640.00 | -16.1 | V | 3.0 | 35.5 | 1.0 | -50.6 | -13.0 | -37.6 | |
| 7520.00 | -12.7 | V | 3.0 | 35.7 | 1.0 | -47.4 | -13.0 | -34.4 | |
| 3760.00 | -21.5 | H | 3.0 | 35.8 | 1.0 | -56.3 | -13.0 | -43.3 | |
| 5640.00 | -13.8 | H | 3.0 | 35.5 | 1.0 | -48.3 | -13.0 | -35.3 | |
| 7520.00 | -10.6 | H | 3.0 | 35.7 | 1.0 | -45.4 | -13.0 | -32.4 | |
| High Ch, 1909.3 | | | | | | | | | |
| 3818.60 | -16.6 | V | 3.0 | 35.8 | 1.0 | -51.4 | -13.0 | -38.4 | |
| 5727.90 | -12.2 | V | 3.0 | 35.5 | 1.0 | -46.7 | -13.0 | -33.7 | |
| 7637.20 | -12.0 | V | 3.0 | 35.8 | 1.0 | -46.8 | -13.0 | -33.8 | |
| 3818.60 | -20.2 | H | 3.0 | 35.8 | 1.0 | -55.0 | -13.0 | -42.0 | |
| 5727.90 | -16.4 | H | 3.0 | 35.5 | 1.0 | -50.9 | -13.0 | -37.9 | |
| 7637.20 | -11.0 | H | 3.0 | 35.8 | 1.0 | -45.8 | -13.0 | -32.8 | |
| | | | | | | | | | |


UL VERFICATION SERVICES FORM ID: FCC_22_24_27_90
47173 BENICIA STREET, FREMONT, CA 94538, USA TEL: (510) 771-1000 FAX: (510) 661-0888
*This report shall not be reproduced except in full, without the written approval of UL Verification Services Inc.*

Band

LTE2

1.4MHz

QPSK

**UL Verification Services, Inc.**
**Above 1GHz High Frequency Substitution Measurement**

**Company:** LG
**Project #:** 15I20514
**Date:** 4/23/2015
**Test Engineer:** Angel Escamilla
**Configuration:** X-pos EUT, Ac Charger, Headset
**Location:** Chamber C
**Mode:** LTE_QPSK Band 2 Harmonics, 1.4MHz Bandwidth

| f MHz | SG reading (dBm) | Ant. Pol. (H/V) | Distance (m) | Preamp (dB) | Filter (dB) | EIRP (dBm) | Limit (dBm) | Delta (dB) | Notes |
|---|---|---|---|---|---|---|---|---|---|
| Low Ch, 1850.7 | | | | | | | | | |
| 3701.40 | -20.8 | V | 3.0 | 35.9 | 1.0 | -55.7 | -13.0 | -42.7 | |
| 5552.10 | -17.1 | V | 3.0 | 35.5 | 1.0 | -51.6 | -13.0 | -38.6 | |
| 7402.80 | -14.0 | V | 3.0 | 35.7 | 1.0 | -48.7 | -13.0 | -35.7 | |
| 3701.40 | -17.4 | H | 3.0 | 35.9 | 1.0 | -52.2 | -13.0 | -39.2 | |
| 5552.10 | -15.1 | H | 3.0 | 35.5 | 1.0 | -49.5 | -13.0 | -36.5 | |
| 7402.80 | -11.0 | H | 3.0 | 35.7 | 1.0 | -45.7 | -13.0 | -32.7 | |
| Mid Ch, 1880 | | | | | | | | | |
| 3760.00 | -19.8 | V | 3.0 | 35.8 | 1.0 | -54.6 | -13.0 | -41.6 | |
| 5640.00 | -17.3 | V | 3.0 | 35.5 | 1.0 | -51.8 | -13.0 | -38.8 | |
| 7520.00 | -14.3 | V | 3.0 | 35.7 | 1.0 | -49.0 | -13.0 | -36.0 | |
| 3760.00 | -19.9 | H | 3.0 | 35.8 | 1.0 | -54.7 | -13.0 | -41.7 | |
| 5640.00 | -13.3 | H | 3.0 | 35.5 | 1.0 | -47.8 | -13.0 | -34.8 | |
| 7520.00 | -12.1 | H | 3.0 | 35.7 | 1.0 | -46.9 | -13.0 | -33.9 | |
| High Ch, 1909.3 | | | | | | | | | |
| 3818.60 | -16.2 | V | 3.0 | 35.8 | 1.0 | -50.9 | -13.0 | -37.9 | |
| 5727.90 | -12.5 | V | 3.0 | 35.5 | 1.0 | -47.0 | -13.0 | -34.0 | |
| 7637.20 | -12.6 | V | 3.0 | 35.8 | 1.0 | -47.3 | -13.0 | -34.3 | |
| 3818.60 | -19.9 | H | 3.0 | 35.8 | 1.0 | -54.6 | -13.0 | -41.6 | |
| 5727.90 | -16.8 | H | 3.0 | 35.5 | 1.0 | -51.3 | -13.0 | -38.3 | |
| 7637.20 | -12.3 | H | 3.0 | 35.8 | 1.0 | -47.1 | -13.0 | -34.1 | |



UL VERFICATION SERVICES FORM ID: FCC_22_24_27_90
47173 BENICIA STREET, FREMONT, CA 94538, USA TEL: (510) 771-1000 FAX: (510) 661-0888

*This report shall not be reproduced except in full, without the written approval of UL Verification Services Inc.*

## LTE Band 4

**UL Verification Services, Inc.**
**Above 1GHz High Frequency Substitution Measurement**

**Company:** LG
**Project #:** 15I20514
**Date:** 4/23/2015
**Test Engineer:** Angel Escamilla
**Configuration:** X-pos EUT, Ac Charger, Headset
**Location:** Chamber C
**Mode:** LTE_16QAM Band 4 Harmonics, 20MHz Bandwidth

Band
LTE4
20MHz
16QAM

| f MHz | SG reading (dBm) | Ant. Pol. (H/V) | Distance (m) | Preamp (dB) | Filter (dB) | EIRP (dBm) | Limit (dBm) | Delta (dB) | Notes |
|---|---|---|---|---|---|---|---|---|---|
| Low Ch, 1720 | | | | | | | | | |
| 3440.00 | -18.4 | V | 3.0 | 36.0 | 1.0 | -53.5 | -13.0 | -40.5 | |
| 5160.00 | -17.6 | V | 3.0 | 35.4 | 1.0 | -52.0 | -13.0 | -39.0 | |
| 6880.00 | -12.7 | V | 3.0 | 35.7 | 1.0 | -47.4 | -13.0 | -34.4 | |
| 3440.00 | -13.0 | H | 3.0 | 36.0 | 1.0 | -48.1 | -13.0 | -35.1 | |
| 5160.00 | -17.8 | H | 3.0 | 35.4 | 1.0 | -52.2 | -13.0 | -39.2 | |
| 6880.00 | -14.3 | H | 3.0 | 35.7 | 1.0 | -49.0 | -13.0 | -36.0 | |
| Mid Ch, 1732.5 | | | | | | | | | |
| 3465.00 | -11.1 | V | 3.0 | 36.0 | 1.0 | -46.2 | -13.0 | -33.2 | |
| 5197.50 | -18.5 | V | 3.0 | 35.4 | 1.0 | -52.9 | -13.0 | -39.9 | |
| 6930.00 | -14.0 | V | 3.0 | 35.7 | 1.0 | -48.7 | -13.0 | -35.7 | |
| 3465.00 | -20.8 | H | 3.0 | 36.0 | 1.0 | -55.8 | -13.0 | -42.8 | |
| 5197.50 | -17.2 | H | 3.0 | 35.4 | 1.0 | -51.6 | -13.0 | -38.6 | |
| 6930.00 | -13.6 | H | 3.0 | 35.7 | 1.0 | -48.3 | -13.0 | -35.3 | |
| High Ch, 1745 | | | | | | | | | |
| 3490.00 | -10.1 | V | 3.0 | 36.0 | 1.0 | -45.1 | -13.0 | -32.1 | |
| 5235.00 | -15.8 | V | 3.0 | 35.4 | 1.0 | -50.2 | -13.0 | -37.2 | |
| 6980.00 | -13.2 | V | 3.0 | 35.7 | 1.0 | -47.9 | -13.0 | -34.9 | |
| 3490.00 | -13.7 | H | 3.0 | 36.0 | 1.0 | -48.7 | -13.0 | -35.7 | |
| 5235.00 | -16.4 | H | 3.0 | 35.4 | 1.0 | -50.9 | -13.0 | -37.9 | |
| 6980.00 | -12.5 | H | 3.0 | 35.7 | 1.0 | -47.1 | -13.0 | -34.1 | |


UL VERFICATION SERVICES FORM ID: FCC_22_24_27_90
47173 BENICIA STREET, FREMONT, CA 94538, USA TEL: (510) 771-1000 FAX: (510) 661-0888
*This report shall not be reproduced except in full, without the written approval of UL Verification Services Inc.*

**UL Verification Services, Inc.**
**Above 1GHz High Frequency Substitution Measurement**

**Company:** LG
**Project #:** 15I20514
**Date:** 4/23/2015
**Test Engineer:** Angel Escamilla
**Configuration:** X-pos EUT, Ac Charger, Headset
**Location:** Chamber C
**Mode:** LTE_QPSK Band 4 Harmonics, 20MHz Bandwidth

| Band | f MHz | SG reading (dBm) | Ant. Pol. (H/V) | Distance (m) | Preamp (dB) | Filter (dB) | EIRP (dBm) | Limit (dBm) | Delta (dB) | Notes |
|---|---|---|---|---|---|---|---|---|---|---|
| | Low Ch, 1720 | | | | | | | | | |
| LTE4 | 3440.00 | -20.4 | V | 3.0 | 36.0 | 1.0 | -55.5 | -13.0 | -42.5 | |
| | 5160.00 | -18.6 | V | 3.0 | 35.4 | 1.0 | -53.0 | -13.0 | -40.0 | |
| | 6880.00 | -14.8 | V | 3.0 | 35.7 | 1.0 | -49.5 | -13.0 | -36.5 | |
| 20MHz | 3440.00 | -13.4 | H | 3.0 | 36.0 | 1.0 | -48.5 | -13.0 | -35.5 | |
| | 5160.00 | -17.6 | H | 3.0 | 35.4 | 1.0 | -52.0 | -13.0 | -39.0 | |
| | 6880.00 | -13.0 | H | 3.0 | 35.7 | 1.0 | -47.6 | -13.0 | -34.6 | |
| QPSK | Mid Ch, 1732.5 | | | | | | | | | |
| | 3465.00 | -10.1 | V | 3.0 | 36.0 | 1.0 | -45.1 | -13.0 | -32.1 | |
| | 5197.50 | -18.3 | V | 3.0 | 35.4 | 1.0 | -52.7 | -13.0 | -39.7 | |
| | 6930.00 | -13.7 | V | 3.0 | 35.7 | 1.0 | -48.4 | -13.0 | -35.4 | |
| | 3465.00 | -20.9 | H | 3.0 | 36.0 | 1.0 | -55.9 | -13.0 | -42.9 | |
| | 5197.50 | -16.5 | H | 3.0 | 35.4 | 1.0 | -51.0 | -13.0 | -38.0 | |
| | 6930.00 | -13.0 | H | 3.0 | 35.7 | 1.0 | -47.7 | -13.0 | -34.7 | |
| | High Ch, 1745 | | | | | | | | | |
| | 3490.00 | -9.2 | V | 3.0 | 36.0 | 1.0 | -44.3 | -13.0 | -31.3 | |
| | 5235.00 | -14.6 | V | 3.0 | 35.4 | 1.0 | -49.0 | -13.0 | -36.0 | |
| | 6980.00 | -12.5 | V | 3.0 | 35.7 | 1.0 | -47.2 | -13.0 | -34.2 | |
| | 3490.00 | -11.7 | H | 3.0 | 36.0 | 1.0 | -46.7 | -13.0 | -33.7 | |
| | 5235.00 | -16.7 | H | 3.0 | 35.4 | 1.0 | -51.1 | -13.0 | -38.1 | |
| | 6980.00 | -11.3 | H | 3.0 | 35.7 | 1.0 | -46.0 | -13.0 | -33.0 | |


*This report shall not be reproduced except in full, without the written approval of UL Verification Services Inc.*

**UL Verification Services, Inc.**
**Above 1GHz High Frequency Substitution Measurement**

**Company:** LG
**Project #:** 15I20514
**Date:** 4/23/2015
**Test Engineer:** Angel Escamilla
**Configuration:** X-pos EUT, Ac Charger, Headset
**Location:** Chamber C
**Mode:** LTE_16QAM Band 4 Harmonics, 15MHz Bandwidth

Band

LTE4

15MHz

16QAM

| f MHz | SG reading (dBm) | Ant. Pol. (H/V) | Distance (m) | Preamp (dB) | Filter (dB) | EIRP (dBm) | Limit (dBm) | Delta (dB) | Notes |
|---|---|---|---|---|---|---|---|---|---|
| Low Ch, 1717.5 | | | | | | | | | |
| 3435.00 | -9.6 | V | 3.0 | 36.1 | 1.0 | -44.7 | -13.0 | -31.7 | |
| 5152.50 | -16.5 | V | 3.0 | 35.4 | 1.0 | -50.9 | -13.0 | -37.9 | |
| 6870.00 | -13.1 | V | 3.0 | 35.7 | 1.0 | -47.8 | -13.0 | -34.8 | |
| 3435.00 | -11.3 | H | 3.0 | 36.1 | 1.0 | -46.3 | -13.0 | -33.3 | |
| 5152.50 | -16.5 | H | 3.0 | 35.4 | 1.0 | -50.9 | -13.0 | -37.9 | |
| 6870.00 | -13.8 | H | 3.0 | 35.7 | 1.0 | -48.4 | -13.0 | -35.4 | |
| Mid Ch, 1732.5 | | | | | | | | | |
| 3465.00 | -19.6 | V | 3.0 | 36.0 | 1.0 | -54.6 | -13.0 | -41.6 | |
| 5197.50 | -19.1 | V | 3.0 | 35.4 | 1.0 | -53.5 | -13.0 | -40.5 | |
| 6930.00 | -13.7 | V | 3.0 | 35.7 | 1.0 | -48.3 | -13.0 | -35.3 | |
| 3465.00 | -21.8 | H | 3.0 | 36.0 | 1.0 | -56.8 | -13.0 | -43.8 | |
| 5197.50 | -17.9 | H | 3.0 | 35.4 | 1.0 | -52.4 | -13.0 | -39.4 | |
| 6930.00 | -12.7 | H | 3.0 | 35.7 | 1.0 | -47.4 | -13.0 | -34.4 | |
| High Ch, 1747.5 | | | | | | | | | |
| 3495.00 | -9.8 | V | 3.0 | 36.0 | 1.0 | -44.8 | -13.0 | -31.8 | |
| 5242.50 | -15.8 | V | 3.0 | 35.4 | 1.0 | -50.3 | -13.0 | -37.3 | |
| 6990.00 | -11.3 | V | 3.0 | 35.7 | 1.0 | -46.0 | -13.0 | -33.0 | |
| 3495.00 | -11.3 | H | 3.0 | 36.0 | 1.0 | -46.3 | -13.0 | -33.3 | |
| 5242.50 | -17.7 | H | 3.0 | 35.4 | 1.0 | -52.1 | -13.0 | -39.1 | |
| 6990.00 | -12.1 | H | 3.0 | 35.7 | 1.0 | -46.8 | -13.0 | -33.8 | |




*This report shall not be reproduced except in full, without the written approval of UL Verification Services Inc.*

**UL Verification Services, Inc.**
**Above 1GHz High Frequency Substitution Measurement**

**Company:** LG
**Project #:** 15I20514
**Date:** 4/23/2015
**Test Engineer:** Angel Escamilla
**Configuration:** X-pos EUT, Ac Charger, Headset
**Location:** Chamber C
**Mode:** LTE_QPSK Band 4 Harmonics, 15MHz Bandwidth

Band
LTE4
15MHz
QPSK

| f MHz | SG reading (dBm) | Ant. Pol. (H/V) | Distance (m) | Preamp (dB) | Filter (dB) | EIRP (dBm) | Limit (dBm) | Delta (dB) | Notes |
|---|---|---|---|---|---|---|---|---|---|
| Low Ch, 1717.5 | | | | | | | | | |
| 3435.00 | -8.7 | V | 3.0 | 36.1 | 1.0 | -43.7 | -13.0 | -30.7 | |
| 5152.50 | -17.7 | V | 3.0 | 35.4 | 1.0 | -52.1 | -13.0 | -39.1 | |
| 6870.00 | -14.7 | V | 3.0 | 35.7 | 1.0 | -49.4 | -13.0 | -36.4 | |
| 3435.00 | -12.0 | H | 3.0 | 36.1 | 1.0 | -47.0 | -13.0 | -34.0 | |
| 5152.50 | -17.9 | H | 3.0 | 35.4 | 1.0 | -52.4 | -13.0 | -39.4 | |
| 6870.00 | -13.6 | H | 3.0 | 35.7 | 1.0 | -48.2 | -13.0 | -35.2 | |
| Mid Ch, 1732.5 | | | | | | | | | |
| 3465.00 | -19.3 | V | 3.0 | 36.0 | 1.0 | -54.3 | -13.0 | -41.3 | |
| 5197.50 | -18.1 | V | 3.0 | 35.4 | 1.0 | -52.6 | -13.0 | -39.6 | |
| 6930.00 | -13.8 | V | 3.0 | 35.7 | 1.0 | -48.5 | -13.0 | -35.5 | |
| 3465.00 | -20.7 | H | 3.0 | 36.0 | 1.0 | -55.7 | -13.0 | -42.7 | |
| 5197.50 | -17.4 | H | 3.0 | 35.4 | 1.0 | -51.8 | -13.0 | -38.8 | |
| 6930.00 | -13.5 | H | 3.0 | 35.7 | 1.0 | -48.2 | -13.0 | -35.2 | |
| High Ch, 1747.5 | | | | | | | | | |
| 3495.00 | -10.9 | V | 3.0 | 36.0 | 1.0 | -45.9 | -13.0 | -32.9 | |
| 5242.50 | -16.8 | V | 3.0 | 35.4 | 1.0 | -51.2 | -13.0 | -38.2 | |
| 6990.00 | -13.3 | V | 3.0 | 35.7 | 1.0 | -48.0 | -13.0 | -35.0 | |
| 3495.00 | -12.2 | H | 3.0 | 36.0 | 1.0 | -47.2 | -13.0 | -34.2 | |
| 5242.50 | -15.7 | H | 3.0 | 35.4 | 1.0 | -50.2 | -13.0 | -37.2 | |
| 6990.00 | -12.2 | H | 3.0 | 35.7 | 1.0 | -46.9 | -13.0 | -33.9 | |


UL VERFICATION SERVICES FORM ID: FCC_22_24_27_90
47173 BENICIA STREET, FREMONT, CA 94538, USA TEL: (510) 771-1000 FAX: (510) 661-0888
*This report shall not be reproduced except in full, without the written approval of UL Verification Services Inc.*

**UL Verification Services, Inc.**
**Above 1GHz High Frequency Substitution Measurement**

**Company:** LG
**Project #:** 15I20514
**Date:** 4/22/2015
**Test Engineer:** Angel Escamilla
**Configuration:** X-pos EUT, Ac Charger, Headset
**Location:** Chamber C
**Mode:** LTE_16QAM Band 4 Harmonics, 10MHz Bandwidth

Band
LTE4
10MHz
16QAM

| f MHz | SG reading (dBm) | Ant. Pol. (H/V) | Distance (m) | Preamp (dB) | Filter (dB) | EIRP (dBm) | Limit (dBm) | Delta (dB) | Notes |
|---|---|---|---|---|---|---|---|---|---|
| Low Ch, 1715 | | | | | | | | | |
| 3430.00 | -8.4 | V | 3.0 | 36.1 | 1.0 | -43.5 | -13.0 | -30.5 | |
| 5145.00 | -15.7 | V | 3.0 | 35.4 | 1.0 | -50.1 | -13.0 | -37.1 | |
| 6860.00 | -14.8 | V | 3.0 | 35.7 | 1.0 | -49.4 | -13.0 | -36.4 | |
| 3430.00 | -11.9 | H | 3.0 | 36.1 | 1.0 | -46.9 | -13.0 | -33.9 | |
| 5145.00 | -15.6 | H | 3.0 | 35.4 | 1.0 | -50.0 | -13.0 | -37.0 | |
| 6860.00 | -12.2 | H | 3.0 | 35.7 | 1.0 | -46.8 | -13.0 | -33.8 | |
| Mid Ch, 1732.5 | | | | | | | | | |
| 3465.00 | -14.1 | V | 3.0 | 36.0 | 1.0 | -49.2 | -13.0 | -36.2 | |
| 5197.50 | -15.8 | V | 3.0 | 35.4 | 1.0 | -50.2 | -13.0 | -37.2 | |
| 6930.00 | -12.4 | V | 3.0 | 35.7 | 1.0 | -47.1 | -13.0 | -34.1 | |
| 3465.00 | -10.2 | H | 3.0 | 36.0 | 1.0 | -45.2 | -13.0 | -32.2 | |
| 5197.50 | -16.9 | H | 3.0 | 35.4 | 1.0 | -51.4 | -13.0 | -38.4 | |
| 6930.00 | -12.6 | H | 3.0 | 35.7 | 1.0 | -47.3 | -13.0 | -34.3 | |
| High Ch, 1750 | | | | | | | | | |
| 3500.00 | -7.6 | V | 3.0 | 36.0 | 1.0 | -42.6 | -13.0 | -29.6 | |
| 5250.00 | -16.7 | V | 3.0 | 35.4 | 1.0 | -51.2 | -13.0 | -38.2 | |
| 7000.00 | -13.0 | V | 3.0 | 35.7 | 1.0 | -47.7 | -13.0 | -34.7 | |
| 3500.00 | -11.0 | H | 3.0 | 36.0 | 1.0 | -46.0 | -13.0 | -33.0 | |
| 5250.00 | -14.0 | H | 3.0 | 35.4 | 1.0 | -48.4 | -13.0 | -35.4 | |
| 7000.00 | -11.2 | H | 3.0 | 35.7 | 1.0 | -45.9 | -13.0 | -32.9 | |


UL VERFICATION SERVICES FORM ID: FCC_22_24_27_90
47173 BENICIA STREET, FREMONT, CA 94538, USA TEL: (510) 771-1000 FAX: (510) 661-0888
*This report shall not be reproduced except in full, without the written approval of UL Verification Services Inc.*

**UL Verification Services, Inc.**
**Above 1GHz High Frequency Substitution Measurement**

**Company:** LG
**Project #:** 15I20514
**Date:** 4/22/2015
**Test Engineer:** Angel Escamilla
**Configuration:** X-pos EUT, Ac Charger, Headset
**Location:** Chamber C
**Mode:** LTE_QPSK Band 4 Harmonics, 10MHz Bandwidth

Band: LTE4 10MHz QPSK

| f MHz | SG reading (dBm) | Ant. Pol. (H/V) | Distance (m) | Preamp (dB) | Filter (dB) | EIRP (dBm) | Limit (dBm) | Delta (dB) | Notes |
|---|---|---|---|---|---|---|---|---|---|
| Low Ch, 1715 | | | | | | | | | |
| 3430.00 | -8.6 | V | 3.0 | 36.1 | 1.0 | -43.7 | -13.0 | -30.7 | |
| 5145.00 | -16.1 | V | 3.0 | 35.4 | 1.0 | -50.6 | -13.0 | -37.6 | |
| 6860.00 | -13.8 | V | 3.0 | 35.7 | 1.0 | -48.5 | -13.0 | -35.5 | |
| 3430.00 | -11.1 | H | 3.0 | 36.1 | 1.0 | -46.2 | -13.0 | -33.2 | |
| 5145.00 | -15.2 | H | 3.0 | 35.4 | 1.0 | -49.6 | -13.0 | -36.6 | |
| 6860.00 | -12.8 | H | 3.0 | 35.7 | 1.0 | -47.5 | -13.0 | -34.5 | |
| Mid Ch, 1732.5 | | | | | | | | | |
| 3465.00 | -14.3 | V | 3.0 | 36.0 | 1.0 | -49.4 | -13.0 | -36.4 | |
| 5197.50 | -16.8 | V | 3.0 | 35.4 | 1.0 | -51.2 | -13.0 | -38.2 | |
| 6930.00 | -12.7 | V | 3.0 | 35.7 | 1.0 | -47.4 | -13.0 | -34.4 | |
| 3465.00 | -10.4 | H | 3.0 | 36.0 | 1.0 | -45.5 | -13.0 | -32.5 | |
| 5197.50 | -16.9 | H | 3.0 | 35.4 | 1.0 | -51.3 | -13.0 | -38.3 | |
| 6930.00 | -13.0 | H | 3.0 | 35.7 | 1.0 | -47.7 | -13.0 | -34.7 | |
| High Ch, 1750 | | | | | | | | | |
| 3500.00 | -7.7 | V | 3.0 | 36.0 | 1.0 | -42.7 | -13.0 | -29.7 | |
| 5250.00 | -16.7 | V | 3.0 | 35.4 | 1.0 | -51.1 | -13.0 | -38.1 | |
| 7000.00 | -13.3 | V | 3.0 | 35.7 | 1.0 | -48.0 | -13.0 | -35.0 | |
| 3500.00 | -10.8 | H | 3.0 | 36.0 | 1.0 | -45.8 | -13.0 | -32.8 | |
| 5250.00 | -14.2 | H | 3.0 | 35.4 | 1.0 | -48.7 | -13.0 | -35.7 | |
| 7000.00 | -12.3 | H | 3.0 | 35.7 | 1.0 | -47.0 | -13.0 | -34.0 | |


UL VERFICATION SERVICES FORM ID: FCC_22_24_27_90
47173 BENICIA STREET, FREMONT, CA 94538, USA TEL: (510) 771-1000 FAX: (510) 661-0888
*This report shall not be reproduced except in full, without the written approval of UL Verification Services Inc.*

**UL Verification Services, Inc.**
**Above 1GHz High Frequency Substitution Measurement**

**Company:** LG
**Project #:** 15I20514
**Date:** 4/22/2015
**Test Engineer:** Angel Escamilla
**Configuration:** X-pos EUT, Ac Charger, Headset
**Location:** Chamber C
**Mode:** LTE_16QAM Band 4 Harmonics, 5MHz Bandwidth

Band
LTE4
5MHz
16QAM

| f MHz | SG reading (dBm) | Ant. Pol. (H/V) | Distance (m) | Preamp (dB) | Filter (dB) | EIRP (dBm) | Limit (dBm) | Delta (dB) | Notes |
|---|---|---|---|---|---|---|---|---|---|
| Low Ch, 1712.5 | | | | | | | | | |
| 3425.00 | -11.8 | V | 3.0 | 36.1 | 1.0 | -46.9 | -13.0 | -33.9 | |
| 5137.50 | -18.1 | V | 3.0 | 35.4 | 1.0 | -52.5 | -13.0 | -39.5 | |
| 6850.00 | -13.7 | V | 3.0 | 35.7 | 1.0 | -48.4 | -13.0 | -35.4 | |
| 3425.00 | -12.6 | H | 3.0 | 36.1 | 1.0 | -47.6 | -13.0 | -34.6 | |
| 5137.50 | -17.8 | H | 3.0 | 35.4 | 1.0 | -52.2 | -13.0 | -39.2 | |
| 6850.00 | -12.6 | H | 3.0 | 35.7 | 1.0 | -47.2 | -13.0 | -34.2 | |
| Mid Ch, 1732.5 | | | | | | | | | |
| 3465.00 | -21.7 | V | 3.0 | 36.0 | 1.0 | -56.7 | -13.0 | -43.7 | |
| 5197.50 | -15.7 | V | 3.0 | 35.4 | 1.0 | -50.1 | -13.0 | -37.1 | |
| 6930.00 | -13.3 | V | 3.0 | 35.7 | 1.0 | -47.9 | -13.0 | -34.9 | |
| 3465.00 | -19.3 | H | 3.0 | 36.0 | 1.0 | -54.4 | -13.0 | -41.4 | |
| 5197.50 | -14.7 | H | 3.0 | 35.4 | 1.0 | -49.1 | -13.0 | -36.1 | |
| 6930.00 | -12.1 | H | 3.0 | 35.7 | 1.0 | -46.8 | -13.0 | -33.8 | |
| High Ch, 1752.5 | | | | | | | | | |
| 3505.00 | -16.2 | V | 3.0 | 36.0 | 1.0 | -51.2 | -13.0 | -38.2 | |
| 5257.50 | -14.5 | V | 3.0 | 35.4 | 1.0 | -49.0 | -13.0 | -36.0 | |
| 7010.00 | -12.9 | V | 3.0 | 35.7 | 1.0 | -47.6 | -13.0 | -34.6 | |
| 3505.00 | -20.5 | H | 3.0 | 36.0 | 1.0 | -55.5 | -13.0 | -42.5 | |
| 5257.50 | -15.2 | H | 3.0 | 35.4 | 1.0 | -49.6 | -13.0 | -36.6 | |
| 7010.00 | -13.2 | H | 3.0 | 35.7 | 1.0 | -47.9 | -13.0 | -34.9 | |
| | | | | | | | | | |


UL VERFICATION SERVICES FORM ID: FCC_22_24_27_90
47173 BENICIA STREET, FREMONT, CA 94538, USA TEL: (510) 771-1000 FAX: (510) 661-0888
*This report shall not be reproduced except in full, without the written approval of UL Verification Services Inc.*

**UL Verification Services, Inc.**
**Above 1GHz High Frequency Substitution Measurement**

**Company:** LG
**Project #:** 15I20514
**Date:** 4/22/2015
**Test Engineer:** Angel Escamilla
**Configuration:** X-pos EUT, Ac Charger, Headset
**Location:** Chamber C
**Mode:** LTE_QPSK Band 4 Harmonics, 5MHz Bandwidth

Band
LTE4
5MHz
QPSK

| f MHz | SG reading (dBm) | Ant. Pol. (H/V) | Distance (m) | Preamp (dB) | Filter (dB) | EIRP (dBm) | Limit (dBm) | Delta (dB) | Notes |
|---|---|---|---|---|---|---|---|---|---|
| Low Ch, 1712.5 | | | | | | | | | |
| 3425.00 | -12.2 | V | 3.0 | 36.1 | 1.0 | -47.3 | -13.0 | -34.3 | |
| 5137.50 | -18.1 | V | 3.0 | 35.4 | 1.0 | -52.5 | -13.0 | -39.5 | |
| 6850.00 | -13.7 | V | 3.0 | 35.7 | 1.0 | -48.4 | -13.0 | -35.4 | |
| 3425.00 | -13.6 | H | 3.0 | 36.1 | 1.0 | -48.6 | -13.0 | -35.6 | |
| 5137.50 | -18.0 | H | 3.0 | 35.4 | 1.0 | -52.4 | -13.0 | -39.4 | |
| 6850.00 | -12.5 | H | 3.0 | 35.7 | 1.0 | -47.2 | -13.0 | -34.2 | |
| Mid Ch, 1732.5 | | | | | | | | | |
| 3465.00 | -20.8 | V | 3.0 | 36.0 | 1.0 | -55.9 | -13.0 | -42.9 | |
| 5197.50 | -15.6 | V | 3.0 | 35.4 | 1.0 | -50.1 | -13.0 | -37.1 | |
| 6930.00 | -12.4 | V | 3.0 | 35.7 | 1.0 | -47.1 | -13.0 | -34.1 | |
| 3465.00 | -19.5 | H | 3.0 | 36.0 | 1.0 | -54.5 | -13.0 | -41.5 | |
| 5197.50 | -13.8 | H | 3.0 | 35.4 | 1.0 | -48.3 | -13.0 | -35.3 | |
| 6930.00 | -12.4 | H | 3.0 | 35.7 | 1.0 | -47.1 | -13.0 | -34.1 | |
| High Ch, 1752.5 | | | | | | | | | |
| 3505.00 | -16.6 | V | 3.0 | 36.0 | 1.0 | -51.6 | -13.0 | -38.6 | |
| 5257.50 | -14.9 | V | 3.0 | 35.4 | 1.0 | -49.3 | -13.0 | -36.3 | |
| 7010.00 | -13.3 | V | 3.0 | 35.7 | 1.0 | -48.0 | -13.0 | -35.0 | |
| 3505.00 | -21.6 | H | 3.0 | 36.0 | 1.0 | -56.6 | -13.0 | -43.6 | |
| 5257.50 | -14.4 | H | 3.0 | 35.4 | 1.0 | -48.8 | -13.0 | -35.8 | |
| 7010.00 | -12.2 | H | 3.0 | 35.7 | 1.0 | -46.8 | -13.0 | -33.8 | |


UL VERFICATION SERVICES FORM ID: FCC_22_24_27_90
47173 BENICIA STREET, FREMONT, CA 94538, USA TEL: (510) 771-1000 FAX: (510) 661-0888
*This report shall not be reproduced except in full, without the written approval of UL Verification Services Inc.*

**UL Verification Services, Inc.**
**Above 1GHz High Frequency Substitution Measurement**

**Company:** LG
**Project #:** 15I20514
**Date:** 4/22/2015
**Test Engineer:** Angel Escamilla
**Configuration:** X-pos EUT, Ac Charger, Headset
**Location:** Chamber C
**Mode:** LTE_16QAM Band 4 Harmonics, 3MHz Bandwidth

| Band | f MHz | SG reading (dBm) | Ant. Pol. (H/V) | Distance (m) | Preamp (dB) | Filter (dB) | EIRP (dBm) | Limit (dBm) | Delta (dB) | Notes |
|---|---|---|---|---|---|---|---|---|---|---|
| | Low Ch, 1711.5 | | | | | | | | | |
| | 3423.00 | -17.9 | V | 3.0 | 36.1 | 1.0 | -52.9 | -13.0 | -39.9 | |
| LTE4 | 5134.50 | -16.4 | V | 3.0 | 35.4 | 1.0 | -50.9 | -13.0 | -37.9 | |
| | 6846.00 | -13.9 | V | 3.0 | 35.7 | 1.0 | -48.5 | -13.0 | -35.5 | |
| | 3423.00 | -9.0 | H | 3.0 | 36.1 | 1.0 | -44.1 | -13.0 | -31.1 | |
| 3MHz | 5134.50 | -15.7 | H | 3.0 | 35.4 | 1.0 | -50.2 | -13.0 | -37.2 | |
| | 6846.00 | -12.4 | H | 3.0 | 35.7 | 1.0 | -47.1 | -13.0 | -34.1 | |
| 16QAM | Mid Ch, 1732.5 | | | | | | | | | |
| | 3465.00 | -17.6 | V | 3.0 | 36.0 | 1.0 | -52.6 | -13.0 | -39.6 | |
| | 5197.50 | -17.0 | V | 3.0 | 35.4 | 1.0 | -51.4 | -13.0 | -38.4 | |
| | 6930.00 | -13.0 | V | 3.0 | 35.7 | 1.0 | -47.6 | -13.0 | -34.6 | |
| | 3465.00 | -4.9 | H | 3.0 | 36.0 | 1.0 | -39.9 | -13.0 | -26.9 | |
| | 5197.50 | -17.9 | H | 3.0 | 35.4 | 1.0 | -52.3 | -13.0 | -39.3 | |
| | 6930.00 | -12.8 | H | 3.0 | 35.7 | 1.0 | -47.5 | -13.0 | -34.5 | |
| | High Ch, 1753.5 | | | | | | | | | |
| | 3507.00 | -12.5 | V | 3.0 | 36.0 | 1.0 | -47.5 | -13.0 | -34.5 | |
| | 5260.50 | -15.1 | V | 3.0 | 35.4 | 1.0 | -49.5 | -13.0 | -36.5 | |
| | 7014.00 | -13.4 | V | 3.0 | 35.7 | 1.0 | -48.1 | -13.0 | -35.1 | |
| | 3507.00 | -2.0 | H | 3.0 | 36.0 | 1.0 | -37.0 | -13.0 | -24.0 | |
| | 5260.50 | -16.1 | H | 3.0 | 35.4 | 1.0 | -50.5 | -13.0 | -37.5 | |
| | 7014.00 | -12.2 | H | 3.0 | 35.7 | 1.0 | -46.9 | -13.0 | -33.9 | |


UL VERFICATION SERVICES FORM ID: FCC_22_24_27_90
47173 BENICIA STREET, FREMONT, CA 94538, USA TEL: (510) 771-1000 FAX: (510) 661-0888
*This report shall not be reproduced except in full, without the written approval of UL Verification Services Inc.*

**UL Verification Services, Inc.**
**Above 1GHz High Frequency Substitution Measurement**

**Company:** LG
**Project #:** 15I20514
**Date:** 4/22/2015
**Test Engineer:** Angel Escamilla
**Configuration:** X-pos EUT, Ac Charger, Headset
**Location:** Chamber C
**Mode:** LTE_16QAM Band 4 Harmonics, 1.4MHz Bandwidth

| Band | f MHz | SG reading (dBm) | Ant. Pol. (H/V) | Distance (m) | Preamp (dB) | Filter (dB) | EIRP (dBm) | Limit (dBm) | Delta (dB) | Notes |
|---|---|---|---|---|---|---|---|---|---|---|
| | Low Ch, 1710.7 | | | | | | | | | |
| LTE4 | 3421.40 | -6.0 | V | 3.0 | 36.1 | 1.0 | -41.1 | -13.0 | -28.1 | |
| | 5132.10 | -17.8 | V | 3.0 | 35.4 | 1.0 | -52.3 | -13.0 | -39.3 | |
| | 6842.80 | -12.9 | V | 3.0 | 35.7 | 1.0 | -47.6 | -13.0 | -34.6 | |
| 3MHz | 3421.40 | -7.5 | H | 3.0 | 36.1 | 1.0 | -42.6 | -13.0 | -29.6 | |
| | 5132.10 | -17.5 | H | 3.0 | 35.4 | 1.0 | -52.0 | -13.0 | -39.0 | |
| | 6842.80 | -12.8 | H | 3.0 | 35.7 | 1.0 | -47.4 | -13.0 | -34.4 | |
| QPSK | Mid Ch, 1732.5 | | | | | | | | | |
| | 3465.00 | -13.6 | V | 3.0 | 36.0 | 1.0 | -48.6 | -13.0 | -35.6 | |
| | 5197.50 | -14.4 | V | 3.0 | 35.4 | 1.0 | -48.9 | -13.0 | -35.9 | |
| | 6930.00 | -12.4 | V | 3.0 | 35.7 | 1.0 | -47.1 | -13.0 | -34.1 | |
| | 3465.00 | -10.1 | H | 3.0 | 36.0 | 1.0 | -45.1 | -13.0 | -32.1 | |
| | 5197.50 | -16.9 | H | 3.0 | 35.4 | 1.0 | -51.3 | -13.0 | -38.3 | |
| | 6930.00 | -11.3 | H | 3.0 | 35.7 | 1.0 | -46.0 | -13.0 | -33.0 | |
| | High Ch, 1754.3 | | | | | | | | | |
| | 3508.60 | -10.3 | V | 3.0 | 36.0 | 1.0 | -45.3 | -13.0 | -32.3 | |
| | 5262.90 | -17.5 | V | 3.0 | 35.4 | 1.0 | -52.0 | -13.0 | -39.0 | |
| | 7017.20 | -12.9 | V | 3.0 | 35.7 | 1.0 | -47.6 | -13.0 | -34.6 | |
| | 3508.60 | -15.9 | H | 3.0 | 36.0 | 1.0 | -50.9 | -13.0 | -37.9 | |
| | 5262.90 | -17.3 | H | 3.0 | 35.4 | 1.0 | -51.8 | -13.0 | -38.8 | |
| | 7017.20 | -12.4 | H | 3.0 | 35.7 | 1.0 | -47.1 | -13.0 | -34.1 | |


*This report shall not be reproduced except in full, without the written approval of UL Verification Services Inc.*

**UL Verification Services, Inc.**
**Above 1GHz High Frequency Substitution Measurement**

**Company:** LG
**Project #:** 15I20514
**Date:** 4/22/2015
**Test Engineer:** Angel Escamilla
**Configuration:** X-pos EUT, Ac Charger, Headset
**Location:** Chamber C
**Mode:** LTE_QPSK Band 4 Harmonics, 1.4MHz Bandwidth

Band
LTE4
1.4MHz
16QAM

| f MHz | SG reading (dBm) | Ant. Pol. (H/V) | Distance (m) | Preamp (dB) | Filter (dB) | EIRP (dBm) | Limit (dBm) | Delta (dB) | Notes |
|---|---|---|---|---|---|---|---|---|---|
| Low Ch, 1710.7 | | | | | | | | | |
| 3421.40 | -5.5 | V | 3.0 | 36.1 | 1.0 | -40.6 | -13.0 | -27.6 | |
| 5132.10 | -18.5 | V | 3.0 | 35.4 | 1.0 | -53.0 | -13.0 | -40.0 | |
| 6842.80 | -13.6 | V | 3.0 | 35.7 | 1.0 | -48.2 | -13.0 | -35.2 | |
| 3421.40 | -6.8 | H | 3.0 | 36.1 | 1.0 | -41.9 | -13.0 | -28.9 | |
| 5132.10 | -17.7 | H | 3.0 | 35.4 | 1.0 | -52.1 | -13.0 | -39.1 | |
| 6842.80 | -12.8 | H | 3.0 | 35.7 | 1.0 | -47.4 | -13.0 | -34.4 | |
| Mid Ch, 1732.5 | | | | | | | | | |
| 3465.00 | -12.9 | V | 3.0 | 36.0 | 1.0 | -47.9 | -13.0 | -34.9 | |
| 5197.50 | -12.8 | V | 3.0 | 35.4 | 1.0 | -47.3 | -13.0 | -34.3 | |
| 6930.00 | -13.6 | V | 3.0 | 35.7 | 1.0 | -48.3 | -13.0 | -35.3 | |
| 3465.00 | -9.2 | H | 3.0 | 36.0 | 1.0 | -44.2 | -13.0 | -31.2 | |
| 5197.50 | -16.5 | H | 3.0 | 35.4 | 1.0 | -51.0 | -13.0 | -38.0 | |
| 6930.00 | -12.2 | H | 3.0 | 35.7 | 1.0 | -46.9 | -13.0 | -33.9 | |
| High Ch, 1754.3 | | | | | | | | | |
| 3508.60 | -10.7 | V | 3.0 | 36.0 | 1.0 | -45.7 | -13.0 | -32.7 | |
| 5262.90 | -17.5 | V | 3.0 | 35.4 | 1.0 | -52.0 | -13.0 | -39.0 | |
| 7017.20 | -13.3 | V | 3.0 | 35.7 | 1.0 | -48.0 | -13.0 | -35.0 | |
| 3508.60 | -15.4 | H | 3.0 | 36.0 | 1.0 | -50.4 | -13.0 | -37.4 | |
| 5262.90 | -16.9 | H | 3.0 | 35.4 | 1.0 | -51.3 | -13.0 | -38.3 | |
| 7017.20 | -12.4 | H | 3.0 | 35.7 | 1.0 | -47.1 | -13.0 | -34.1 | |


UL VERFICATION SERVICES FORM ID: FCC_22_24_27_90
47173 BENICIA STREET, FREMONT, CA 94538, USA TEL: (510) 771-1000 FAX: (510) 661-0888
*This report shall not be reproduced except in full, without the written approval of UL Verification Services Inc.*

**UL Verification Services, Inc.**
**Above 1GHz High Frequency Substitution Measurement**

**Company:** LG
**Project #:** 15I20514
**Date:** 4/22/2015
**Test Engineer:** Angel Escamilla
**Configuration:** X-pos EUT, Ac Charger, Headset
**Location:** Chamber C
**Mode:** LTE_QPSK Band 4 Harmonics, 1.4MHz Bandwidth

Band: LTE4 1.4MHz QPSK

| f MHz | SG reading (dBm) | Ant. Pol. (H/V) | Distance (m) | Preamp (dB) | Filter (dB) | EIRP (dBm) | Limit (dBm) | Delta (dB) | Notes |
|---|---|---|---|---|---|---|---|---|---|
| Low Ch, 1710.7 | | | | | | | | | |
| 3421.40 | -5.5 | V | 3.0 | 36.1 | 1.0 | -40.6 | -13.0 | -27.6 | |
| 5132.10 | -18.5 | V | 3.0 | 35.4 | 1.0 | -53.0 | -13.0 | -40.0 | |
| 6842.80 | -13.6 | V | 3.0 | 35.7 | 1.0 | -48.2 | -13.0 | -35.2 | |
| 3421.40 | -6.8 | H | 3.0 | 36.1 | 1.0 | -41.9 | -13.0 | -28.9 | |
| 5132.10 | -17.7 | H | 3.0 | 35.4 | 1.0 | -52.1 | -13.0 | -39.1 | |
| 6842.80 | -12.8 | H | 3.0 | 35.7 | 1.0 | -47.4 | -13.0 | -34.4 | |
| Mid Ch, 1732.5 | | | | | | | | | |
| 3465.00 | -12.9 | V | 3.0 | 36.0 | 1.0 | -47.9 | -13.0 | -34.9 | |
| 5197.50 | -12.8 | V | 3.0 | 35.4 | 1.0 | -47.3 | -13.0 | -34.3 | |
| 6930.00 | -13.6 | V | 3.0 | 35.7 | 1.0 | -48.3 | -13.0 | -35.3 | |
| 3465.00 | -9.2 | H | 3.0 | 36.0 | 1.0 | -44.2 | -13.0 | -31.2 | |
| 5197.50 | -16.5 | H | 3.0 | 35.4 | 1.0 | -51.0 | -13.0 | -38.0 | |
| 6930.00 | -12.2 | H | 3.0 | 35.7 | 1.0 | -46.9 | -13.0 | -33.9 | |
| High Ch, 1754.3 | | | | | | | | | |
| 3508.60 | -10.7 | V | 3.0 | 36.0 | 1.0 | -45.7 | -13.0 | -32.7 | |
| 5262.90 | -17.5 | V | 3.0 | 35.4 | 1.0 | -52.0 | -13.0 | -39.0 | |
| 7017.20 | -13.3 | V | 3.0 | 35.7 | 1.0 | -48.0 | -13.0 | -35.0 | |
| 3508.60 | -15.4 | H | 3.0 | 36.0 | 1.0 | -50.4 | -13.0 | -37.4 | |
| 5262.90 | -16.9 | H | 3.0 | 35.4 | 1.0 | -51.3 | -13.0 | -38.3 | |
| 7017.20 | -12.4 | H | 3.0 | 35.7 | 1.0 | -47.1 | -13.0 | -34.1 | |


*This report shall not be reproduced except in full, without the written approval of UL Verification Services Inc.*

## LTE Band 5

**UL Verification Services, Inc.**
**Above 1GHz High Frequency Substitution Measurement**

**Company:** LG Electronics
**Project #:** 15I20514
**Date:** 4/27/2015
**Test Engineer:** D. Mun
**Configuration:** EUT/ AC Charger/ Headset
**Location:** Chamber F
**Mode:** LTE_16QAM Band 5 Harmonics, 10MHz Bandwidth

Band
LTE5
10MHz
16QAM

| f MHz | SG reading (dBm) | Ant. Pol. (H/V) | Distance (m) | Preamp (dB) | Filter (dB) | EIRP (dBm) | Limit (dBm) | Delta (dB) | Notes |
|---|---|---|---|---|---|---|---|---|---|
| Low Ch, 829 | | | | | | | | | |
| 1658.00 | -28.7 | V | 3.0 | 37.0 | 1.0 | -64.7 | -13.0 | -51.7 | |
| 2487.00 | -22.8 | V | 3.0 | 36.4 | 1.0 | -58.2 | -13.0 | -45.2 | |
| 3316.00 | -23.0 | V | 3.0 | 36.2 | 1.0 | -58.2 | -13.0 | -45.2 | |
| 1658.00 | -28.4 | H | 3.0 | 37.0 | 1.0 | -64.5 | -13.0 | -51.5 | |
| 2487.00 | -25.5 | H | 3.0 | 36.4 | 1.0 | -60.9 | -13.0 | -47.9 | |
| 3316.00 | -23.0 | H | 3.0 | 36.2 | 1.0 | -58.1 | -13.0 | -45.1 | |
| Mid Ch, 836.5 | | | | | | | | | |
| 1673.00 | -28.1 | V | 3.0 | 37.0 | 1.0 | -64.1 | -13.0 | -51.1 | |
| 2509.50 | -21.6 | V | 3.0 | 36.4 | 1.0 | -57.1 | -13.0 | -44.1 | |
| 3346.00 | -22.2 | V | 3.0 | 36.1 | 1.0 | -57.3 | -13.0 | -44.3 | |
| 1673.00 | -28.1 | H | 3.0 | 37.0 | 1.0 | -64.1 | -13.0 | -51.1 | |
| 2509.50 | -23.5 | H | 3.0 | 36.4 | 1.0 | -58.9 | -13.0 | -45.9 | |
| 3346.00 | -22.8 | H | 3.0 | 36.1 | 1.0 | -58.0 | -13.0 | -45.0 | |
| High Ch, 844 | | | | | | | | | |
| 1688.00 | -28.3 | V | 3.0 | 37.0 | 1.0 | -64.2 | -13.0 | -51.2 | |
| 2532.00 | -21.3 | V | 3.0 | 36.4 | 1.0 | -56.7 | -13.0 | -43.7 | |
| 3376.00 | -22.8 | V | 3.0 | 36.1 | 1.0 | -57.9 | -13.0 | -44.9 | |
| 1688.00 | -28.1 | H | 3.0 | 37.0 | 1.0 | -64.1 | -13.0 | -51.1 | |
| 2532.00 | -23.9 | H | 3.0 | 36.4 | 1.0 | -59.3 | -13.0 | -46.3 | |
| 3376.00 | -23.2 | H | 3.0 | 36.1 | 1.0 | -58.3 | -13.0 | -45.3 | |


UL VERFICATION SERVICES FORM ID: FCC_22_24_27_90
47173 BENICIA STREET, FREMONT, CA 94538, USA TEL: (510) 771-1000 FAX: (510) 661-0888
*This report shall not be reproduced except in full, without the written approval of UL Verification Services Inc.*

**UL Verification Services, Inc.**
**Above 1GHz High Frequency Substitution Measurement**

**Company:** LG Electronics
**Project #:** 15I20514
**Date:** 4/27/2015
**Test Engineer:** D. Mun
**Configuration:** EUT/ AC Charger/ Headset
**Location:** Chamber F
**Mode:** LTE_QPSK Band 5 Harmonics, 10MHz Bandwidth

Band LTE5 10MHz QPSK

| f MHz | SG reading (dBm) | Ant. Pol. (H/V) | Distance (m) | Preamp (dB) | Filter (dB) | EIRP (dBm) | Limit (dBm) | Delta (dB) | Notes |
|---|---|---|---|---|---|---|---|---|---|
| Low Ch, 829 | | | | | | | | | |
| 1658.00 | -27.9 | V | 3.0 | 37.0 | 1.0 | -64.0 | -13.0 | -51.0 | |
| 2487.00 | -24.2 | V | 3.0 | 36.4 | 1.0 | -59.6 | -13.0 | -46.6 | |
| 3316.00 | -22.9 | V | 3.0 | 36.2 | 1.0 | -58.1 | -13.0 | -45.1 | |
| 1658.00 | -28.5 | H | 3.0 | 37.0 | 1.0 | -64.6 | -13.0 | -51.6 | |
| 2487.00 | -24.7 | H | 3.0 | 36.4 | 1.0 | -60.1 | -13.0 | -47.1 | |
| 3316.00 | -23.0 | H | 3.0 | 36.2 | 1.0 | -58.2 | -13.0 | -45.2 | |
| Mid Ch, 836.5 | | | | | | | | | |
| 1673.00 | -28.7 | V | 3.0 | 37.0 | 1.0 | -64.7 | -13.0 | -51.7 | |
| 2509.50 | -22.6 | V | 3.0 | 36.4 | 1.0 | -58.0 | -13.0 | -45.0 | |
| 3346.00 | -22.8 | V | 3.0 | 36.1 | 1.0 | -57.9 | -13.0 | -44.9 | |
| 1673.00 | -28.1 | H | 3.0 | 37.0 | 1.0 | -64.1 | -13.0 | -51.1 | |
| 2509.50 | -22.4 | H | 3.0 | 36.4 | 1.0 | -57.8 | -13.0 | -44.8 | |
| 3346.00 | -22.9 | H | 3.0 | 36.1 | 1.0 | -58.1 | -13.0 | -45.1 | |
| High Ch, 844 | | | | | | | | | |
| 1688.00 | -28.5 | V | 3.0 | 37.0 | 1.0 | -64.5 | -13.0 | -51.5 | |
| 2532.00 | -23.3 | V | 3.0 | 36.4 | 1.0 | -58.7 | -13.0 | -45.7 | |
| 3376.00 | -22.2 | V | 3.0 | 36.1 | 1.0 | -57.2 | -13.0 | -44.2 | |
| 1688.00 | -27.7 | H | 3.0 | 37.0 | 1.0 | -63.7 | -13.0 | -50.7 | |
| 2532.00 | -23.6 | H | 3.0 | 36.4 | 1.0 | -59.0 | -13.0 | -46.0 | |
| 3376.00 | -22.5 | H | 3.0 | 36.1 | 1.0 | -57.5 | -13.0 | -44.5 | |


*This report shall not be reproduced except in full, without the written approval of UL Verification Services Inc.*

**UL Verification Services, Inc.**
**Above 1GHz High Frequency Substitution Measurement**

**Company:** LG Electronics
**Project #:** 15I20514
**Date:** 4/27/2015
**Test Engineer:** D. Mun
**Configuration:** EUT/ AC Charger/ Headset
**Location:** Chamber F
**Mode:** LTE_16QAM Band 5 Harmonics, 5MHz Bandwidth

Band LTE5 5MHz 16QAM

| f MHz | SG reading (dBm) | Ant. Pol. (H/V) | Distance (m) | Preamp (dB) | Filter (dB) | EIRP (dBm) | Limit (dBm) | Delta (dB) | Notes |
|---|---|---|---|---|---|---|---|---|---|
| Low Ch, 826.5 | | | | | | | | | |
| 1653.00 | -27.4 | V | 3.0 | 37.0 | 1.0 | -63.4 | -13.0 | -50.4 | |
| 2479.50 | -22.1 | V | 3.0 | 36.4 | 1.0 | -57.6 | -13.0 | -44.6 | |
| 3306.00 | -21.8 | V | 3.0 | 36.2 | 1.0 | -57.0 | -13.0 | -44.0 | |
| 1653.00 | -27.1 | H | 3.0 | 37.0 | 1.0 | -63.2 | -13.0 | -50.2 | |
| 2479.50 | -22.8 | H | 3.0 | 36.4 | 1.0 | -58.2 | -13.0 | -45.2 | |
| 3306.00 | -21.6 | H | 3.0 | 36.2 | 1.0 | -56.8 | -13.0 | -43.8 | |
| Mid Ch, 836.5 | | | | | | | | | |
| 1673.00 | -27.0 | V | 3.0 | 37.0 | 1.0 | -63.0 | -13.0 | -50.0 | |
| 2509.50 | -20.5 | V | 3.0 | 36.4 | 1.0 | -55.9 | -13.0 | -42.9 | |
| 3346.00 | -22.0 | V | 3.0 | 36.1 | 1.0 | -57.1 | -13.0 | -44.1 | |
| 1673.00 | -27.4 | H | 3.0 | 37.0 | 1.0 | -63.4 | -13.0 | -50.4 | |
| 2509.50 | -22.3 | H | 3.0 | 36.4 | 1.0 | -57.7 | -13.0 | -44.7 | |
| 3346.00 | -21.8 | H | 3.0 | 36.1 | 1.0 | -56.9 | -13.0 | -43.9 | |
| High Ch, 846.5 | | | | | | | | | |
| 1693.00 | -26.4 | V | 3.0 | 37.0 | 1.0 | -62.3 | -13.0 | -49.3 | |
| 2539.50 | -20.6 | V | 3.0 | 36.4 | 1.0 | -56.0 | -13.0 | -43.0 | |
| 3386.00 | -20.8 | V | 3.0 | 36.1 | 1.0 | -55.9 | -13.0 | -42.9 | |
| 1693.00 | -26.9 | H | 3.0 | 37.0 | 1.0 | -62.9 | -13.0 | -49.9 | |
| 2539.50 | -21.9 | H | 3.0 | 36.4 | 1.0 | -57.3 | -13.0 | -44.3 | |
| 3386.00 | -21.8 | H | 3.0 | 36.1 | 1.0 | -56.9 | -13.0 | -43.9 | |


UL VERFICATION SERVICES FORM ID: FCC_22_24_27_90
47173 BENICIA STREET, FREMONT, CA 94538, USA TEL: (510) 771-1000 FAX: (510) 661-0888
*This report shall not be reproduced except in full, without the written approval of UL Verification Services Inc.*

Band

LTE5

5MHz

QPSK

**UL Verification Services, Inc.**
**Above 1GHz High Frequency Substitution Measurement**

**Company:** LG Electronics
**Project #:** 15I20514
**Date:** 4/27/2015
**Test Engineer:** D. Mun
**Configuration:** EUT/ AC Charger/ Headset
**Location:** Chamber F
**Mode:** LTE_QPSK Band 5 Harmonics, 5MHz Bandwidth

| f MHz | SG reading (dBm) | Ant. Pol. (H/V) | Distance (m) | Preamp (dB) | Filter (dB) | EIRP (dBm) | Limit (dBm) | Delta (dB) | Notes |
|---|---|---|---|---|---|---|---|---|---|
| Low Ch, 826.5 | | | | | | | | | |
| 1653.00 | -27.0 | V | 3.0 | 37.0 | 1.0 | -63.0 | -13.0 | -50.0 | |
| 2479.50 | -21.3 | V | 3.0 | 36.4 | 1.0 | -56.8 | -13.0 | -43.8 | |
| 3306.00 | -22.4 | V | 3.0 | 36.2 | 1.0 | -57.5 | -13.0 | -44.5 | |
| 1653.00 | -27.2 | H | 3.0 | 37.0 | 1.0 | -63.3 | -13.0 | -50.3 | |
| 2479.50 | -23.0 | H | 3.0 | 36.4 | 1.0 | -58.5 | -13.0 | -45.5 | |
| 3306.00 | -22.0 | H | 3.0 | 36.2 | 1.0 | -57.2 | -13.0 | -44.2 | |
| Mid Ch, 836.5 | | | | | | | | | |
| 1673.00 | -27.1 | V | 3.0 | 37.0 | 1.0 | -63.1 | -13.0 | -50.1 | |
| 2509.50 | -20.9 | V | 3.0 | 36.4 | 1.0 | -56.3 | -13.0 | -43.3 | |
| 3346.00 | -22.0 | V | 3.0 | 36.1 | 1.0 | -57.1 | -13.0 | -44.1 | |
| 1673.00 | -27.4 | H | 3.0 | 37.0 | 1.0 | -63.4 | -13.0 | -50.4 | |
| 2509.50 | -22.7 | H | 3.0 | 36.4 | 1.0 | -58.1 | -13.0 | -45.1 | |
| 3346.00 | -21.8 | H | 3.0 | 36.1 | 1.0 | -56.9 | -13.0 | -43.9 | |
| High Ch, 846.5 | | | | | | | | | |
| 1693.00 | -26.5 | V | 3.0 | 37.0 | 1.0 | -62.5 | -13.0 | -49.5 | |
| 2539.50 | -21.1 | V | 3.0 | 36.4 | 1.0 | -56.5 | -13.0 | -43.5 | |
| 3386.00 | -21.1 | V | 3.0 | 36.1 | 1.0 | -56.2 | -13.0 | -43.2 | |
| 1693.00 | -26.9 | H | 3.0 | 37.0 | 1.0 | -62.9 | -13.0 | -49.9 | |
| 2539.50 | -21.9 | H | 3.0 | 36.4 | 1.0 | -57.3 | -13.0 | -44.3 | |
| 3386.00 | -21.3 | H | 3.0 | 36.1 | 1.0 | -56.4 | -13.0 | -43.4 | |


UL VERFICATION SERVICES FORM ID: FCC_22_24_27_90
47173 BENICIA STREET, FREMONT, CA 94538, USA TEL: (510) 771-1000 FAX: (510) 661-0888
*This report shall not be reproduced except in full, without the written approval of UL Verification Services Inc.*

**UL Verification Services, Inc.**
**Above 1GHz High Frequency Substitution Measurement**

**Company:** LG Electronics
**Project #:** 15I20514
**Date:** 4/27/2015
**Test Engineer:** D. Mun
**Configuration:** EUT/ AC Charger/ Headset
**Location:** Chamber F
**Mode:** LTE_16QAM Band 5 Harmonics, 3MHz Bandwidth

Band
LTE5
3MHz
16QAM

| f MHz | SG reading (dBm) | Ant. Pol. (H/V) | Distance (m) | Preamp (dB) | Filter (dB) | EIRP (dBm) | Limit (dBm) | Delta (dB) | Notes |
|---|---|---|---|---|---|---|---|---|---|
| Low Ch, 825.5 | | | | | | | | | |
| 1651.00 | -27.0 | V | 3.0 | 37.0 | 1.0 | -63.0 | -13.0 | -50.0 | |
| 2476.50 | -22.9 | V | 3.0 | 36.4 | 1.0 | -58.3 | -13.0 | -45.3 | |
| 3302.00 | -22.1 | V | 3.0 | 36.2 | 1.0 | -57.2 | -13.0 | -44.2 | |
| 1651.00 | -27.2 | H | 3.0 | 37.0 | 1.0 | -63.2 | -13.0 | -50.2 | |
| 2476.50 | -22.8 | H | 3.0 | 36.4 | 1.0 | -58.2 | -13.0 | -45.2 | |
| 3302.00 | -21.0 | H | 3.0 | 36.2 | 1.0 | -56.2 | -13.0 | -43.2 | |
| Mid Ch, 836.5 | | | | | | | | | |
| 1673.00 | -27.0 | V | 3.0 | 37.0 | 1.0 | -63.0 | -13.0 | -50.0 | |
| 2509.50 | -20.6 | V | 3.0 | 36.4 | 1.0 | -56.0 | -13.0 | -43.0 | |
| 3346.00 | -22.0 | V | 3.0 | 36.1 | 1.0 | -57.1 | -13.0 | -44.1 | |
| 1673.00 | -27.5 | H | 3.0 | 37.0 | 1.0 | -63.6 | -13.0 | -50.6 | |
| 2509.50 | -22.9 | H | 3.0 | 36.4 | 1.0 | -58.3 | -13.0 | -45.3 | |
| 3346.00 | -22.4 | H | 3.0 | 36.1 | 1.0 | -57.5 | -13.0 | -44.5 | |
| High Ch, 847.5 | | | | | | | | | |
| 1695.00 | -26.3 | V | 3.0 | 37.0 | 1.0 | -62.2 | -13.0 | -49.2 | |
| 2542.50 | -21.1 | V | 3.0 | 36.4 | 1.0 | -56.5 | -13.0 | -43.5 | |
| 3390.00 | -21.4 | V | 3.0 | 36.1 | 1.0 | -56.5 | -13.0 | -43.5 | |
| 1695.00 | -27.1 | H | 3.0 | 37.0 | 1.0 | -63.1 | -13.0 | -50.1 | |
| 2542.50 | -22.4 | H | 3.0 | 36.4 | 1.0 | -57.9 | -13.0 | -44.9 | |
| 3390.00 | -21.7 | H | 3.0 | 36.1 | 1.0 | -56.8 | -13.0 | -43.8 | |


UL VERFICATION SERVICES FORM ID: FCC_22_24_27_90
47173 BENICIA STREET, FREMONT, CA 94538, USA TEL: (510) 771-1000 FAX: (510) 661-0888
*This report shall not be reproduced except in full, without the written approval of UL Verification Services Inc.*

**UL Verification Services, Inc.**
**Above 1GHz High Frequency Substitution Measurement**

**Company:** LG Electronics
**Project #:** 15I20514
**Date:** 4/27/2015
**Test Engineer:** D. Mun
**Configuration:** EUT/ AC Charger/ Headset
**Location:** Chamber F
**Mode:** LTE_QPSK Band 5 Harmonics, 3MHz Bandwidth

Band LTE5 3MHz QPSK

| f MHz | SG reading (dBm) | Ant. Pol. (H/V) | Distance (m) | Preamp (dB) | Filter (dB) | EIRP (dBm) | Limit (dBm) | Delta (dB) | Notes |
|---|---|---|---|---|---|---|---|---|---|
| Low Ch, 825.5 | | | | | | | | | |
| 1651.00 | -26.5 | V | 3.0 | 37.0 | 1.0 | -62.5 | -13.0 | -49.5 | |
| 2476.50 | -21.5 | V | 3.0 | 36.4 | 1.0 | -56.9 | -13.0 | -43.9 | |
| 3302.00 | -21.7 | V | 3.0 | 36.2 | 1.0 | -56.9 | -13.0 | -43.9 | |
| 1651.00 | -27.8 | H | 3.0 | 37.0 | 1.0 | -63.8 | -13.0 | -50.8 | |
| 2476.50 | -23.3 | H | 3.0 | 36.4 | 1.0 | -58.7 | -13.0 | -45.7 | |
| 3302.00 | -22.0 | H | 3.0 | 36.2 | 1.0 | -57.2 | -13.0 | -44.2 | |
| Mid Ch, 836.5 | | | | | | | | | |
| 1673.00 | -26.4 | V | 3.0 | 37.0 | 1.0 | -62.4 | -13.0 | -49.4 | |
| 2509.50 | -20.7 | V | 3.0 | 36.4 | 1.0 | -56.1 | -13.0 | -43.1 | |
| 3346.00 | -20.6 | V | 3.0 | 36.1 | 1.0 | -55.7 | -13.0 | -42.7 | |
| 1673.00 | -27.0 | H | 3.0 | 37.0 | 1.0 | -63.0 | -13.0 | -50.0 | |
| 2509.50 | -22.2 | H | 3.0 | 36.4 | 1.0 | -57.6 | -13.0 | -44.6 | |
| 3346.00 | -21.9 | H | 3.0 | 36.1 | 1.0 | -57.0 | -13.0 | -44.0 | |
| High Ch, 847.5 | | | | | | | | | |
| 1695.00 | -26.7 | V | 3.0 | 37.0 | 1.0 | -62.6 | -13.0 | -49.6 | |
| 2542.50 | -20.8 | V | 3.0 | 36.4 | 1.0 | -56.2 | -13.0 | -43.2 | |
| 3390.00 | -20.8 | V | 3.0 | 36.1 | 1.0 | -55.9 | -13.0 | -42.9 | |
| 1695.00 | -26.4 | H | 3.0 | 37.0 | 1.0 | -62.4 | -13.0 | -49.4 | |
| 2542.50 | -22.0 | H | 3.0 | 36.4 | 1.0 | -57.5 | -13.0 | -44.5 | |
| 3390.00 | -20.5 | H | 3.0 | 36.1 | 1.0 | -55.6 | -13.0 | -42.6 | |


UL VERFICATION SERVICES FORM ID: FCC_22_24_27_90
47173 BENICIA STREET, FREMONT, CA 94538, USA TEL: (510) 771-1000 FAX: (510) 661-0888
*This report shall not be reproduced except in full, without the written approval of UL Verification Services Inc.*

**UL Verification Services, Inc.**
**Above 1GHz High Frequency Substitution Measurement**

**Company:** LG Electronics
**Project #:** 15I20514
**Date:** 4/27/2015
**Test Engineer:** D. Mun
**Configuration:** EUT/ AC Charger/ Headset
**Location:** Chamber F
**Mode:** LTE_16QAM Band 5 Harmonics, 1.4MHz Bandwidth

Band LTE5 1.4MHz 16QAM

| f MHz | SG reading (dBm) | Ant. Pol. (H/V) | Distance (m) | Preamp (dB) | Filter (dB) | EIRP (dBm) | Limit (dBm) | Delta (dB) | Notes |
|---|---|---|---|---|---|---|---|---|---|
| Low Ch, 824.7 | | | | | | | | | |
| 1649.40 | -27.1 | V | 3.0 | 37.1 | 1.0 | -63.2 | -13.0 | -50.2 | |
| 2474.10 | -20.9 | V | 3.0 | 36.4 | 1.0 | -56.3 | -13.0 | -43.3 | |
| 3298.80 | -21.2 | V | 3.0 | 36.2 | 1.0 | -56.4 | -13.0 | -43.4 | |
| 1649.40 | -27.6 | H | 3.0 | 37.1 | 1.0 | -63.7 | -13.0 | -50.7 | |
| 2474.10 | -22.1 | H | 3.0 | 36.4 | 1.0 | -57.5 | -13.0 | -44.5 | |
| 3298.80 | -22.5 | H | 3.0 | 36.2 | 1.0 | -57.7 | -13.0 | -44.7 | |
| Mid Ch, 836.5 | | | | | | | | | |
| 1673.00 | -26.5 | V | 3.0 | 37.0 | 1.0 | -62.5 | -13.0 | -49.5 | |
| 2509.50 | -20.9 | V | 3.0 | 36.4 | 1.0 | -56.3 | -13.0 | -43.3 | |
| 3346.00 | -22.3 | V | 3.0 | 36.1 | 1.0 | -57.4 | -13.0 | -44.4 | |
| 1673.00 | -27.4 | H | 3.0 | 37.0 | 1.0 | -63.4 | -13.0 | -50.4 | |
| 2509.50 | -23.8 | H | 3.0 | 36.4 | 1.0 | -59.2 | -13.0 | -46.2 | |
| 3346.00 | -23.4 | H | 3.0 | 36.1 | 1.0 | -58.5 | -13.0 | -45.5 | |
| High Ch, 848.3 | | | | | | | | | |
| 1696.60 | -26.5 | V | 3.0 | 37.0 | 1.0 | -62.5 | -13.0 | -49.5 | |
| 2544.90 | -22.4 | V | 3.0 | 36.4 | 1.0 | -57.9 | -13.0 | -44.9 | |
| 3393.20 | -20.5 | V | 3.0 | 36.1 | 1.0 | -55.6 | -13.0 | -42.6 | |
| 1696.60 | -27.3 | H | 3.0 | 37.0 | 1.0 | -63.3 | -13.0 | -50.3 | |
| 2544.90 | -22.6 | H | 3.0 | 36.4 | 1.0 | -58.0 | -13.0 | -45.0 | |
| 3393.20 | -21.9 | H | 3.0 | 36.1 | 1.0 | -57.0 | -13.0 | -44.0 | |


UL VERFICATION SERVICES FORM ID: FCC_22_24_27_90
47173 BENICIA STREET, FREMONT, CA 94538, USA TEL: (510) 771-1000 FAX: (510) 661-0888
*This report shall not be reproduced except in full, without the written approval of UL Verification Services Inc.*

**UL Verification Services, Inc.**
**Above 1GHz High Frequency Substitution Measurement**

**Company:** LG Electronics
**Project #:** 15I20514
**Date:** 4/27/2015
**Test Engineer:** D. Mun
**Configuration:** EUT/ AC Charger/ Headset
**Location:** Chamber F
**Mode:** LTE_QPSK Band 5 Harmonics, 1.4MHz Bandwidth

Band
LTE5
1.4MHz
QPSK

| f MHz | SG reading (dBm) | Ant. Pol. (H/V) | Distance (m) | Preamp (dB) | Filter (dB) | EIRP (dBm) | Limit (dBm) | Delta (dB) | Notes |
|---|---|---|---|---|---|---|---|---|---|
| Low Ch, 824.7 | | | | | | | | | |
| 1649.40 | -27.0 | V | 3.0 | 37.1 | 1.0 | -63.1 | -13.0 | -50.1 | |
| 2474.10 | -21.6 | V | 3.0 | 36.4 | 1.0 | -57.0 | -13.0 | -44.0 | |
| 3298.80 | -21.1 | V | 3.0 | 36.2 | 1.0 | -56.3 | -13.0 | -43.3 | |
| 1649.40 | -26.7 | H | 3.0 | 37.1 | 1.0 | -62.7 | -13.0 | -49.7 | |
| 2474.10 | -23.5 | H | 3.0 | 36.4 | 1.0 | -59.0 | -13.0 | -46.0 | |
| 3298.80 | -21.9 | H | 3.0 | 36.2 | 1.0 | -57.1 | -13.0 | -44.1 | |
| Mid Ch, 836.5 | | | | | | | | | |
| 1673.00 | -27.4 | V | 3.0 | 37.0 | 1.0 | -63.4 | -13.0 | -50.4 | |
| 2509.50 | -25.1 | V | 3.0 | 36.4 | 1.0 | -60.6 | -13.0 | -47.6 | |
| 3346.00 | -21.3 | V | 3.0 | 36.1 | 1.0 | -56.4 | -13.0 | -43.4 | |
| 1673.00 | -26.1 | H | 3.0 | 37.0 | 1.0 | -62.1 | -13.0 | -49.1 | |
| 2509.50 | -23.0 | H | 3.0 | 36.4 | 1.0 | -58.4 | -13.0 | -45.4 | |
| 3346.00 | -20.9 | H | 3.0 | 36.1 | 1.0 | -56.0 | -13.0 | -43.0 | |
| High Ch, 848.3 | | | | | | | | | |
| 1696.60 | -25.4 | V | 3.0 | 37.0 | 1.0 | -61.4 | -13.0 | -48.4 | |
| 2544.90 | -22.3 | V | 3.0 | 36.4 | 1.0 | -57.7 | -13.0 | -44.7 | |
| 3393.20 | -21.5 | V | 3.0 | 36.1 | 1.0 | -56.6 | -13.0 | -43.6 | |
| 1696.60 | -26.7 | H | 3.0 | 37.0 | 1.0 | -62.7 | -13.0 | -49.7 | |
| 2544.90 | -21.8 | H | 3.0 | 36.4 | 1.0 | -57.2 | -13.0 | -44.2 | |
| 3393.20 | -22.0 | H | 3.0 | 36.1 | 1.0 | -57.1 | -13.0 | -44.1 | |


UL VERFICATION SERVICES FORM ID: FCC_22_24_27_90
47173 BENICIA STREET, FREMONT, CA 94538, USA TEL: (510) 771-1000 FAX: (510) 661-0888
*This report shall not be reproduced except in full, without the written approval of UL Verification Services Inc.*

**LTE Band 12**

**UL Verification Services, Inc.**
**Above 1GHz High Frequency Substitution Measurement**

**Company:** LG
**Project #:** 15I20514
**Date:** 4/27/2015
**Test Engineer:** D. Mun
**Configuration:** EUT , AC Adapter /HS
**Location:** Chamber F
**Mode:** LTE_16QAM Band 12 Harmonics, 10MHz Bandwidth

Band

LTE12

10MHz

16QAM

| f MHz | SG reading (dBm) | Ant. Pol. (H/V) | Distance (m) | Preamp (dB) | Filter (dB) | EIRP (dBm) | Limit (dBm) | Delta (dB) | Notes |
|---|---|---|---|---|---|---|---|---|---|
| Low Ch,704 | | | | | | | | | |
| 1408.00 | -29.9 | V | 3.0 | 37.4 | 1.0 | -66.3 | -13.0 | -53.3 | |
| 2112.00 | -20.6 | V | 3.0 | 36.6 | 1.0 | -56.2 | -13.0 | -43.2 | |
| 2816.00 | -22.8 | V | 3.0 | 36.4 | 1.0 | -58.2 | -13.0 | -45.2 | |
| 1408.00 | -28.8 | H | 3.0 | 37.4 | 1.0 | -65.2 | -13.0 | -52.2 | |
| 2112.00 | -24.2 | H | 3.0 | 36.6 | 1.0 | -59.8 | -13.0 | -46.8 | |
| 2816.00 | -23.4 | H | 3.0 | 36.4 | 1.0 | -58.8 | -13.0 | -45.8 | |
| Mid Ch,707.5 | | | | | | | | | |
| 1415.00 | -29.4 | V | 3.0 | 37.3 | 1.0 | -65.7 | -13.0 | -52.7 | |
| 2122.50 | -22.9 | V | 3.0 | 36.6 | 1.0 | -58.4 | -13.0 | -45.4 | |
| 2830.00 | -22.6 | V | 3.0 | 36.4 | 1.0 | -58.0 | -13.0 | -45.0 | |
| 1415.00 | -28.1 | H | 3.0 | 37.3 | 1.0 | -64.5 | -13.0 | -51.5 | |
| 2122.50 | -24.3 | H | 3.0 | 36.6 | 1.0 | -59.9 | -13.0 | -46.9 | |
| 2830.00 | -23.8 | H | 3.0 | 36.4 | 1.0 | -59.2 | -13.0 | -46.2 | |
| High Ch,711 | | | | | | | | | |
| 1422.00 | -28.7 | V | 3.0 | 37.3 | 1.0 | -65.0 | -13.0 | -52.0 | |
| 2133.00 | -22.5 | V | 3.0 | 36.6 | 1.0 | -58.0 | -13.0 | -45.0 | |
| 2844.00 | -22.2 | V | 3.0 | 36.4 | 1.0 | -57.6 | -13.0 | -44.6 | |
| 1422.00 | -28.7 | H | 3.0 | 37.3 | 1.0 | -65.0 | -13.0 | -52.0 | |
| 2133.00 | -24.3 | H | 3.0 | 36.6 | 1.0 | -59.9 | -13.0 | -46.9 | |
| 2844.00 | -24.5 | H | 3.0 | 36.4 | 1.0 | -59.9 | -13.0 | -46.9 | |




*This report shall not be reproduced except in full, without the written approval of UL Verification Services Inc.*

**UL Verification Services, Inc.**
**Above 1GHz High Frequency Substitution Measurement**

**Company:** LG
**Project #:** 15I20514
**Date:** 4/27/2015
**Test Engineer:** D. Mun
**Configuration:** EUT , AC Adapter /HS
**Location:** Chamber F
**Mode:** LTE_QPSK Band 12 Harmonics, 10MHz Bandwidth

Band
LTE12
10MHz
QPSK

| f MHz | SG reading (dBm) | Ant. Pol. (H/V) | Distance (m) | Preamp (dB) | Filter (dB) | EIRP (dBm) | Limit (dBm) | Delta (dB) | Notes |
|---|---|---|---|---|---|---|---|---|---|
| Low Ch,704 | | | | | | | | | |
| 1408.00 | -28.9 | V | 3.0 | 37.4 | 1.0 | -65.2 | -13.0 | -52.2 | |
| 2112.00 | -22.9 | V | 3.0 | 36.6 | 1.0 | -58.5 | -13.0 | -45.5 | |
| 2816.00 | -22.3 | V | 3.0 | 36.4 | 1.0 | -57.7 | -13.0 | -44.7 | |
| 1408.00 | -28.3 | H | 3.0 | 37.4 | 1.0 | -64.7 | -13.0 | -51.7 | |
| 2112.00 | -24.5 | H | 3.0 | 36.6 | 1.0 | -60.1 | -13.0 | -47.1 | |
| 2816.00 | -23.3 | H | 3.0 | 36.4 | 1.0 | -58.7 | -13.0 | -45.7 | |
| Mid Ch,707.5 | | | | | | | | | |
| 1415.00 | -30.0 | V | 3.0 | 37.3 | 1.0 | -66.3 | -13.0 | -53.3 | |
| 2122.50 | -22.0 | V | 3.0 | 36.6 | 1.0 | -57.6 | -13.0 | -44.6 | |
| 2830.00 | -22.3 | V | 3.0 | 36.4 | 1.0 | -57.7 | -13.0 | -44.7 | |
| 1415.00 | -28.6 | H | 3.0 | 37.3 | 1.0 | -64.9 | -13.0 | -51.9 | |
| 2122.50 | -22.0 | H | 3.0 | 36.6 | 1.0 | -57.6 | -13.0 | -44.6 | |
| 2830.00 | -22.7 | H | 3.0 | 36.4 | 1.0 | -58.0 | -13.0 | -45.0 | |
| High Ch,711 | | | | | | | | | |
| 1422.00 | -29.6 | V | 3.0 | 37.3 | 1.0 | -66.0 | -13.0 | -53.0 | |
| 2133.00 | -22.6 | V | 3.0 | 36.6 | 1.0 | -58.2 | -13.0 | -45.2 | |
| 2844.00 | -22.4 | V | 3.0 | 36.4 | 1.0 | -57.8 | -13.0 | -44.8 | |
| 1422.00 | -28.2 | H | 3.0 | 37.3 | 1.0 | -64.5 | -13.0 | -51.5 | |
| 2133.00 | -24.5 | H | 3.0 | 36.6 | 1.0 | -60.1 | -13.0 | -47.1 | |
| 2844.00 | -24.3 | H | 3.0 | 36.4 | 1.0 | -59.7 | -13.0 | -46.7 | |


*This report shall not be reproduced except in full, without the written approval of UL Verification Services Inc.*

## UL Verification Services, Inc.
## Above 1GHz High Frequency Substitution Measurement

**Company:** LG
**Project #:** 15I20514
**Date:** 4/27/2015
**Test Engineer:** D. Mun
**Configuration:** EUT , AC Adapter /HS
**Location:** Chamber F
**Mode:** LTE_16QAM Band 12 Harmonics, 5MHz Bandwidth

Band
LTE12
5MHz
16QAM

| f MHz | SG reading (dBm) | Ant. Pol. (H/V) | Distance (m) | Preamp (dB) | Filter (dB) | EIRP (dBm) | Limit (dBm) | Delta (dB) | Notes |
|---|---|---|---|---|---|---|---|---|---|
| Low Ch, 701.50 | | | | | | | | | |
| 1403.00 | -34.5 | V | 3.0 | 37.4 | 1.0 | -70.8 | -13.0 | -57.8 | |
| 2104.50 | -27.8 | V | 3.0 | 36.6 | 1.0 | -63.4 | -13.0 | -50.4 | |
| 2806.00 | -27.5 | V | 3.0 | 36.4 | 1.0 | -62.9 | -13.0 | -49.9 | |
| 1403.00 | -32.6 | H | 3.0 | 37.4 | 1.0 | -69.0 | -13.0 | -56.0 | |
| 2104.50 | -28.1 | H | 3.0 | 36.6 | 1.0 | -63.6 | -13.0 | -50.6 | |
| 2806.00 | -28.1 | H | 3.0 | 36.4 | 1.0 | -63.5 | -13.0 | -50.5 | |
| Mid Ch, 707.50 | | | | | | | | | |
| 1415.00 | -33.7 | V | 3.0 | 37.3 | 1.0 | -70.1 | -13.0 | -57.1 | |
| 2122.50 | -27.7 | V | 3.0 | 36.6 | 1.0 | -63.3 | -13.0 | -50.3 | |
| 2830.00 | -24.4 | V | 3.0 | 36.4 | 1.0 | -59.8 | -13.0 | -46.8 | |
| 1415.00 | -32.8 | H | 3.0 | 37.3 | 1.0 | -69.1 | -13.0 | -56.1 | |
| 2122.50 | -26.5 | H | 3.0 | 36.6 | 1.0 | -62.1 | -13.0 | -49.1 | |
| 2830.00 | -26.9 | H | 3.0 | 36.4 | 1.0 | -62.3 | -13.0 | -49.3 | |
| High Ch, 713.50 | | | | | | | | | |
| 1427.00 | -33.1 | V | 3.0 | 37.3 | 1.0 | -69.4 | -13.0 | -56.4 | |
| 2140.50 | -27.2 | V | 3.0 | 36.6 | 1.0 | -62.8 | -13.0 | -49.8 | |
| 2854.00 | -26.1 | V | 3.0 | 36.4 | 1.0 | -61.4 | -13.0 | -48.4 | |
| 1427.00 | -31.6 | H | 3.0 | 37.3 | 1.0 | -67.9 | -13.0 | -54.9 | |
| 2140.50 | -26.7 | H | 3.0 | 36.6 | 1.0 | -62.3 | -13.0 | -49.3 | |
| 2854.00 | -27.6 | H | 3.0 | 36.4 | 1.0 | -63.0 | -13.0 | -50.0 | |


*This report shall not be reproduced except in full, without the written approval of UL Verification Services Inc.*

## UL Verification Services, Inc.
## Above 1GHz High Frequency Substitution Measurement

**Company:** LG
**Project #:** 15I20514
**Date:** 4/27/2015
**Test Engineer:** D. Mun
**Configuration:** EUT , AC Adapter /HS
**Location:** Chamber F
**Mode:** LTE_QPSK Band 12 Harmonics, 5MHz Bandwidth

Band
LTE12
5MHz
QPSK

| f MHz | SG reading (dBm) | Ant. Pol. (H/V) | Distance (m) | Preamp (dB) | Filter (dB) | EIRP (dBm) | Limit (dBm) | Delta (dB) | Notes |
|---|---|---|---|---|---|---|---|---|---|
| Low Ch, 701.50 | | | | | | | | | |
| 1403.00 | -31.4 | V | 3.0 | 37.4 | 1.0 | -67.7 | -13.0 | -54.7 | |
| 2104.50 | -25.9 | V | 3.0 | 36.6 | 1.0 | -61.5 | -13.0 | -48.5 | |
| 2806.00 | -25.6 | V | 3.0 | 36.4 | 1.0 | -61.0 | -13.0 | -48.0 | |
| 1403.00 | -29.0 | H | 3.0 | 37.4 | 1.0 | -65.4 | -13.0 | -52.4 | |
| 2104.50 | -25.9 | H | 3.0 | 36.6 | 1.0 | -61.4 | -13.0 | -48.4 | |
| 2806.00 | -25.8 | H | 3.0 | 36.4 | 1.0 | -61.2 | -13.0 | -48.2 | |
| Mid Ch, 707.50 | | | | | | | | | |
| 1415.00 | -33.6 | V | 3.0 | 37.3 | 1.0 | -69.9 | -13.0 | -56.9 | |
| 2122.50 | -27.6 | V | 3.0 | 36.6 | 1.0 | -63.2 | -13.0 | -50.2 | |
| 2830.00 | -25.0 | V | 3.0 | 36.4 | 1.0 | -60.4 | -13.0 | -47.4 | |
| 1415.00 | -32.6 | H | 3.0 | 37.3 | 1.0 | -69.0 | -13.0 | -56.0 | |
| 2122.50 | -28.3 | H | 3.0 | 36.6 | 1.0 | -63.9 | -13.0 | -50.9 | |
| 2830.00 | -27.7 | H | 3.0 | 36.4 | 1.0 | -63.1 | -13.0 | -50.1 | |
| High Ch, 713.50 | | | | | | | | | |
| 1427.00 | -33.8 | V | 3.0 | 37.3 | 1.0 | -70.1 | -13.0 | -57.1 | |
| 2140.50 | -27.4 | V | 3.0 | 36.6 | 1.0 | -63.0 | -13.0 | -50.0 | |
| 2854.00 | -26.3 | V | 3.0 | 36.4 | 1.0 | -61.7 | -13.0 | -48.7 | |
| 1427.00 | -31.3 | H | 3.0 | 37.3 | 1.0 | -67.7 | -13.0 | -54.7 | |
| 2140.50 | -26.9 | H | 3.0 | 36.6 | 1.0 | -62.4 | -13.0 | -49.4 | |
| 2854.00 | -26.3 | H | 3.0 | 36.4 | 1.0 | -61.7 | -13.0 | -48.7 | |


*This report shall not be reproduced except in full, without the written approval of UL Verification Services Inc.*

## UL Verification Services, Inc.
## Above 1GHz High Frequency Substitution Measurement

**Company:** LG
**Project #:** 15I20514
**Date:** 4/27/2015
**Test Engineer:** D. Mun
**Configuration:** EUT , AC Adapter /HS
**Location:** Chamber F
**Mode:** LTE_16QAM Band 12 Harmonics, 3MHz Bandwidth

Band
LTE12
3MHz
16QAM

| f MHz | SG reading (dBm) | Ant. Pol. (H/V) | Distance (m) | Preamp (dB) | Filter (dB) | EIRP (dBm) | Limit (dBm) | Delta (dB) | Notes |
|---|---|---|---|---|---|---|---|---|---|
| Low Ch, 700.5 | | | | | | | | | |
| 1401.00 | -32.9 | V | 3.0 | 37.4 | 1.0 | -69.2 | -13.0 | -56.2 | |
| 2101.50 | -27.0 | V | 3.0 | 36.6 | 1.0 | -62.6 | -13.0 | -49.6 | |
| 2802.00 | -26.3 | V | 3.0 | 36.4 | 1.0 | -61.6 | -13.0 | -48.6 | |
| 1401.00 | -32.8 | H | 3.0 | 37.4 | 1.0 | -69.2 | -13.0 | -56.2 | |
| 2101.50 | -28.0 | H | 3.0 | 36.6 | 1.0 | -63.6 | -13.0 | -50.6 | |
| 2802.00 | -27.5 | H | 3.0 | 36.4 | 1.0 | -62.9 | -13.0 | -49.9 | |
| Mid Ch, 707.50 | | | | | | | | | |
| 1415.00 | -30.3 | V | 3.0 | 37.3 | 1.0 | -66.6 | -13.0 | -53.6 | |
| 2122.00 | -24.4 | V | 3.0 | 36.6 | 1.0 | -60.0 | -13.0 | -47.0 | |
| 2830.00 | -23.2 | V | 3.0 | 36.4 | 1.0 | -58.6 | -13.0 | -45.6 | |
| 1415.00 | -30.3 | H | 3.0 | 37.3 | 1.0 | -66.6 | -13.0 | -53.6 | |
| 2122.00 | -24.9 | H | 3.0 | 36.6 | 1.0 | -60.5 | -13.0 | -47.5 | |
| 2830.00 | -24.5 | H | 3.0 | 36.4 | 1.0 | -59.9 | -13.0 | -46.9 | |
| High Ch, 714.5 | | | | | | | | | |
| 1429.00 | -29.1 | V | 3.0 | 37.3 | 1.0 | -65.4 | -13.0 | -52.4 | |
| 2143.50 | -23.7 | V | 3.0 | 36.6 | 1.0 | -59.2 | -13.0 | -46.2 | |
| 2858.00 | -23.9 | V | 3.0 | 36.4 | 1.0 | -59.3 | -13.0 | -46.3 | |
| 1429.00 | -29.4 | H | 3.0 | 37.3 | 1.0 | -65.7 | -13.0 | -52.7 | |
| 2143.50 | -24.8 | H | 3.0 | 36.6 | 1.0 | -60.4 | -13.0 | -47.4 | |
| 2858.00 | -26.0 | H | 3.0 | 36.4 | 1.0 | -61.4 | -13.0 | -48.4 | |


*This report shall not be reproduced except in full, without the written approval of UL Verification Services Inc.*

## UL Verification Services, Inc.
## Above 1GHz High Frequency Substitution Measurement

**Company:** LG
**Project #:** 15I20514
**Date:** 4/27/2015
**Test Engineer:** D. Mun
**Configuration:** EUT , AC Adapter /HS
**Location:** Chamber F
**Mode:** LTE_QPSK Band 12 Harmonics, 3MHz Bandwidth

| Band | f MHz | SG reading (dBm) | Ant. Pol. (H/V) | Distance (m) | Preamp (dB) | Filter (dB) | EIRP (dBm) | Limit (dBm) | Delta (dB) | Notes |
|---|---|---|---|---|---|---|---|---|---|---|
| | Low Ch, 700.5 | | | | | | | | | |
| LTE12 | 1401.00 | -32.8 | V | 3.0 | 37.4 | 1.0 | -69.2 | -13.0 | -56.2 | |
| | 2101.50 | -26.7 | V | 3.0 | 36.6 | 1.0 | -62.3 | -13.0 | -49.3 | |
| 3MHz | 2802.00 | -27.0 | V | 3.0 | 36.4 | 1.0 | -62.4 | -13.0 | -49.4 | |
| | 1401.00 | -32.3 | H | 3.0 | 37.4 | 1.0 | -68.6 | -13.0 | -55.6 | |
| QPSK | 2101.50 | -26.9 | H | 3.0 | 36.6 | 1.0 | -62.5 | -13.0 | -49.5 | |
| | 2802.00 | -26.8 | H | 3.0 | 36.4 | 1.0 | -62.2 | -13.0 | -49.2 | |
| | Mid Ch, 707.50 | | | | | | | | | |
| | 1415.00 | -29.8 | V | 3.0 | 37.3 | 1.0 | -66.1 | -13.0 | -53.1 | |
| | 2122.00 | -24.1 | V | 3.0 | 36.6 | 1.0 | -59.7 | -13.0 | -46.7 | |
| | 2830.00 | -24.0 | V | 3.0 | 36.4 | 1.0 | -59.3 | -13.0 | -46.3 | |
| | 1415.00 | -29.9 | H | 3.0 | 37.3 | 1.0 | -66.3 | -13.0 | -53.3 | |
| | 2122.00 | -24.6 | H | 3.0 | 36.6 | 1.0 | -60.2 | -13.0 | -47.2 | |
| | 2830.00 | -24.3 | H | 3.0 | 36.4 | 1.0 | -59.7 | -13.0 | -46.7 | |
| | High Ch, 714.5 | | | | | | | | | |
| | 1429.00 | -32.8 | V | 3.0 | 37.3 | 1.0 | -69.1 | -13.0 | -56.1 | |
| | 2143.50 | -26.5 | V | 3.0 | 36.6 | 1.0 | -62.0 | -13.0 | -49.0 | |
| | 2858.00 | -25.2 | V | 3.0 | 36.4 | 1.0 | -60.6 | -13.0 | -47.6 | |
| | 1429.00 | -30.0 | H | 3.0 | 37.3 | 1.0 | -66.3 | -13.0 | -53.3 | |
| | 2143.50 | -26.5 | H | 3.0 | 36.6 | 1.0 | -62.1 | -13.0 | -49.1 | |
| | 2858.00 | -25.6 | H | 3.0 | 36.4 | 1.0 | -61.0 | -13.0 | -48.0 | |
| | | | | | | | | | | |


*This report shall not be reproduced except in full, without the written approval of UL Verification Services Inc.*

## UL Verification Services, Inc. Chamber F
## Above 1GHz High Frequency Substitution Measurement

**Company:** LG Electronics
**Project #:** 15I20514
**Date:** 04/27/15
**Test Engineer:** D. Mun
**Configuration:** EUT w/ AC Adapter + HS
**Location:** Chamber F
**Mode:** LTE_16QAM Band 12 Harmonics, 1.4MHz Bandwidth

| Band | f MHz | SG reading (dBm) | Ant. Pol. (H/V) | Distance (m) | Preamp (dB) | Filter (dB) | EIRP (dBm) | Limit (dBm) | Delta (dB) | Notes |
|---|---|---|---|---|---|---|---|---|---|---|
| | Low Ch, 699.7 | | | | | | | | | |
| LTE12 | 1399.40 | -28.8 | V | 3.0 | 37.4 | 1.0 | -65.1 | -13.0 | -52.1 | |
| | 2099.10 | -23.5 | V | 3.0 | 36.6 | 1.0 | -59.1 | -13.0 | -46.1 | |
| 1.4MHz | 2798.80 | -25.8 | V | 3.0 | 36.4 | 1.0 | -61.2 | -13.0 | -48.2 | |
| | 1399.40 | -26.8 | H | 3.0 | 37.4 | 1.0 | -63.1 | -13.0 | -50.1 | |
| 16QAM | 2099.10 | -25.5 | H | 3.0 | 36.6 | 1.0 | -61.0 | -13.0 | -48.0 | |
| | 2798.80 | -26.6 | H | 3.0 | 36.4 | 1.0 | -62.0 | -13.0 | -49.0 | |
| | Mid Ch, 707.50 | | | | | | | | | |
| | 1415.00 | -30.0 | V | 3.0 | 37.3 | 1.0 | -66.4 | -13.0 | -53.4 | |
| | 2122.00 | -26.4 | V | 3.0 | 36.6 | 1.0 | -62.0 | -13.0 | -49.0 | |
| | 2830.00 | -25.8 | V | 3.0 | 36.4 | 1.0 | -61.2 | -13.0 | -48.2 | |
| | 1415.00 | -30.0 | H | 3.0 | 37.3 | 1.0 | -66.4 | -13.0 | -53.4 | |
| | 2122.00 | -26.4 | H | 3.0 | 36.6 | 1.0 | -62.0 | -13.0 | -49.0 | |
| | 2830.00 | -26.0 | H | 3.0 | 36.4 | 1.0 | -61.3 | -13.0 | -48.3 | |
| | High Ch, 715.3 | | | | | | | | | |
| | 1430.60 | -29.5 | V | 3.0 | 37.3 | 1.0 | -65.9 | -13.0 | -52.9 | |
| | 2145.90 | -23.9 | V | 3.0 | 36.6 | 1.0 | -59.4 | -13.0 | -46.4 | |
| | 2861.20 | -25.5 | V | 3.0 | 36.4 | 1.0 | -60.9 | -13.0 | -47.9 | |
| | 1430.60 | -29.6 | H | 3.0 | 37.3 | 1.0 | -65.9 | -13.0 | -52.9 | |
| | 2145.90 | -25.9 | H | 3.0 | 36.6 | 1.0 | -61.5 | -13.0 | -48.5 | |
| | 2861.20 | -27.2 | H | 3.0 | 36.4 | 1.0 | -62.6 | -13.0 | -49.6 | |


UL VERFICATION SERVICES FORM ID: FCC_22_24_27_90
47173 BENICIA STREET, FREMONT, CA 94538, USA TEL: (510) 771-1000 FAX: (510) 661-0888
*This report shall not be reproduced except in full, without the written approval of UL Verification Services Inc.*

## UL Verification Services, Inc. Chamber F
## Above 1GHz High Frequency Substitution Measurement

**Company:** LG Electronics
**Project #:** 15I20514
**Date:** 04/27/15
**Test Engineer:** D. Mun
**Configuration:** EUT w/ AC Adapter + HS
**Location:** Chamber F
**Mode:** LTE_QPSK Band 12 Harmonics, 1.4MHz Bandwidth

Band
LTE12
1.4MHz
QPSK

| f MHz | SG reading (dBm) | Ant. Pol. (H/V) | Distance (m) | Preamp (dB) | Filter (dB) | EIRP (dBm) | Limit (dBm) | Delta (dB) | Notes |
|---|---|---|---|---|---|---|---|---|---|
| Low Ch, 699.7 | | | | | | | | | |
| 1399.40 | -27.0 | V | 3.0 | 37.4 | 1.0 | -63.4 | -13.0 | -50.4 | |
| 2099.10 | -24.1 | V | 3.0 | 36.6 | 1.0 | -59.7 | -13.0 | -46.7 | |
| 2798.80 | -26.1 | V | 3.0 | 36.4 | 1.0 | -61.5 | -13.0 | -48.5 | |
| 1399.40 | -26.0 | H | 3.0 | 37.4 | 1.0 | -62.4 | -13.0 | -49.4 | |
| 2099.10 | -25.4 | H | 3.0 | 36.6 | 1.0 | -61.0 | -13.0 | -48.0 | |
| 2798.80 | -27.9 | H | 3.0 | 36.4 | 1.0 | -63.3 | -13.0 | -50.3 | |
| Mid Ch, 707.50 | | | | | | | | | |
| 1415.00 | -29.7 | V | 3.0 | 37.3 | 1.0 | -66.0 | -13.0 | -53.0 | |
| 2122.00 | -27.3 | V | 3.0 | 36.6 | 1.0 | -62.8 | -13.0 | -49.8 | |
| 2830.00 | -26.2 | V | 3.0 | 36.4 | 1.0 | -61.6 | -13.0 | -48.6 | |
| 1415.00 | -29.3 | H | 3.0 | 37.3 | 1.0 | -65.6 | -13.0 | -52.6 | |
| 2122.00 | -27.6 | H | 3.0 | 36.6 | 1.0 | -63.2 | -13.0 | -50.2 | |
| 2830.00 | -27.0 | H | 3.0 | 36.4 | 1.0 | -62.4 | -13.0 | -49.4 | |
| High Ch, 715.3 | | | | | | | | | |
| 1430.60 | -28.7 | V | 3.0 | 37.3 | 1.0 | -65.0 | -13.0 | -52.0 | |
| 2145.90 | -22.1 | V | 3.0 | 36.6 | 1.0 | -57.6 | -13.0 | -44.6 | |
| 2861.20 | -24.0 | V | 3.0 | 36.4 | 1.0 | -59.4 | -13.0 | -46.4 | |
| 1430.60 | -28.4 | H | 3.0 | 37.3 | 1.0 | -64.7 | -13.0 | -51.7 | |
| 2145.90 | -24.7 | H | 3.0 | 36.6 | 1.0 | -60.2 | -13.0 | -47.2 | |
| 2861.20 | -25.7 | H | 3.0 | 36.4 | 1.0 | -61.1 | -13.0 | -48.1 | |


UL VERFICATION SERVICES FORM ID: FCC_22_24_27_90
47173 BENICIA STREET, FREMONT, CA 94538, USA TEL: (510) 771-1000 FAX: (510) 661-0888
*This report shall not be reproduced except in full, without the written approval of UL Verification Services Inc.*

## LTE Band 25

**UL Verification Services, Inc.**
**Above 1GHz High Frequency Substitution Measurement**

**Company:** LG
**Project #:** 15I20514
**Date:** 4/23/2015
**Test Engineer:** Angel Escamilla
**Configuration:** X-pos EUT, Ac Charger, Headset
**Location:** Chamber C
**Mode:** LTE_16QAM Band 25 Harmonics, 20MHz Bandwidth

Band

LTE25

20MHz

16QAM

| f MHz | SG reading (dBm) | Ant. Pol. (H/V) | Distance (m) | Preamp (dB) | Filter (dB) | EIRP (dBm) | Limit (dBm) | Delta (dB) | Notes |
|---|---|---|---|---|---|---|---|---|---|
| Low Ch, 1860 | | | | | | | | | |
| 3720.00 | -20.5 | V | 3.0 | 35.8 | 1.0 | -55.3 | -13.0 | -42.3 | |
| 5580.00 | -15.3 | V | 3.0 | 35.5 | 1.0 | -49.8 | -13.0 | -36.8 | |
| 7440.00 | -11.1 | V | 3.0 | 35.7 | 1.0 | -45.8 | -13.0 | -32.8 | |
| 3720.00 | -21.1 | H | 3.0 | 35.8 | 1.0 | -56.0 | -13.0 | -43.0 | |
| 5580.00 | -11.7 | H | 3.0 | 35.5 | 1.0 | -46.2 | -13.0 | -33.2 | |
| 7440.00 | -11.7 | H | 3.0 | 35.7 | 1.0 | -46.4 | -13.0 | -33.4 | |
| Mid Ch, 1882.5 | | | | | | | | | |
| 3765.00 | -19.6 | V | 3.0 | 35.8 | 1.0 | -54.4 | -13.0 | -41.4 | |
| 5647.50 | -16.7 | V | 3.0 | 35.5 | 1.0 | -51.1 | -13.0 | -38.1 | |
| 7530.00 | -10.9 | V | 3.0 | 35.7 | 1.0 | -45.7 | -13.0 | -32.7 | |
| 3765.00 | -20.6 | H | 3.0 | 35.8 | 1.0 | -55.4 | -13.0 | -42.4 | |
| 5647.50 | -16.9 | H | 3.0 | 35.5 | 1.0 | -51.4 | -13.0 | -38.4 | |
| 7530.00 | -9.9 | H | 3.0 | 35.7 | 1.0 | -44.7 | -13.0 | -31.7 | |
| High Ch, 1905 | | | | | | | | | |
| 3810.00 | -18.8 | V | 3.0 | 35.8 | 1.0 | -53.6 | -13.0 | -40.6 | |
| 5715.00 | -15.5 | V | 3.0 | 35.5 | 1.0 | -50.0 | -13.0 | -37.0 | |
| 7620.00 | -11.9 | V | 3.0 | 35.8 | 1.0 | -46.7 | -13.0 | -33.7 | |
| 3810.00 | -20.4 | H | 3.0 | 35.8 | 1.0 | -55.2 | -13.0 | -42.2 | |
| 5715.00 | -14.9 | H | 3.0 | 35.5 | 1.0 | -49.4 | -13.0 | -36.4 | |
| 7620.00 | -12.6 | H | 3.0 | 35.8 | 1.0 | -47.4 | -13.0 | -34.4 | |


*This report shall not be reproduced except in full, without the written approval of UL Verification Services Inc.*

Band

LTE25

20MHz

QPSK

**UL Verification Services, Inc.**
**Above 1GHz High Frequency Substitution Measurement**

**Company:** LG
**Project #:** 15I20514
**Date:** 4/23/2015
**Test Engineer:** Angel Escamilla
**Configuration:** X-pos EUT, Ac Charger, Headset
**Location:** Chamber C
**Mode:** LTE_QPSK Band 25 Harmonics, 20MHz Bandwidth

| f MHz | SG reading (dBm) | Ant. Pol. (H/V) | Distance (m) | Preamp (dB) | Filter (dB) | EIRP (dBm) | Limit (dBm) | Delta (dB) | Notes |
|---|---|---|---|---|---|---|---|---|---|
| Low Ch, 1860 | | | | | | | | | |
| 3720.00 | -20.3 | V | 3.0 | 35.8 | 1.0 | -55.2 | -13.0 | -42.2 | |
| 5580.00 | -15.6 | V | 3.0 | 35.5 | 1.0 | -50.1 | -13.0 | -37.1 | |
| 7440.00 | -10.8 | V | 3.0 | 35.7 | 1.0 | -45.5 | -13.0 | -32.5 | |
| 3720.00 | -21.3 | H | 3.0 | 35.8 | 1.0 | -56.2 | -13.0 | -43.2 | |
| 5580.00 | -12.9 | H | 3.0 | 35.5 | 1.0 | -47.4 | -13.0 | -34.4 | |
| 7440.00 | -11.5 | H | 3.0 | 35.7 | 1.0 | -46.3 | -13.0 | -33.3 | |
| Mid Ch, 1882.5 | | | | | | | | | |
| 3765.00 | -18.0 | V | 3.0 | 35.8 | 1.0 | -52.8 | -13.0 | -39.8 | |
| 5647.50 | -15.1 | V | 3.0 | 35.5 | 1.0 | -49.6 | -13.0 | -36.6 | |
| 7530.00 | -11.3 | V | 3.0 | 35.7 | 1.0 | -46.0 | -13.0 | -33.0 | |
| 3765.00 | -18.7 | H | 3.0 | 35.8 | 1.0 | -53.5 | -13.0 | -40.5 | |
| 5647.50 | -16.6 | H | 3.0 | 35.5 | 1.0 | -51.1 | -13.0 | -38.1 | |
| 7530.00 | -10.4 | H | 3.0 | 35.7 | 1.0 | -45.2 | -13.0 | -32.2 | |
| High Ch, 1905 | | | | | | | | | |
| 3810.00 | -19.7 | V | 3.0 | 35.8 | 1.0 | -54.5 | -13.0 | -41.5 | |
| 5715.00 | -15.1 | V | 3.0 | 35.5 | 1.0 | -49.6 | -13.0 | -36.6 | |
| 7620.00 | -11.3 | V | 3.0 | 35.8 | 1.0 | -46.1 | -13.0 | -33.1 | |
| 3810.00 | -20.8 | H | 3.0 | 35.8 | 1.0 | -55.6 | -13.0 | -42.6 | |
| 5715.00 | -15.3 | H | 3.0 | 35.5 | 1.0 | -49.8 | -13.0 | -36.8 | |
| 7620.00 | -12.2 | H | 3.0 | 35.8 | 1.0 | -47.0 | -13.0 | -34.0 | |



UL VERFICATION SERVICES FORM ID: FCC_22_24_27_90
47173 BENICIA STREET, FREMONT, CA 94538, USA TEL: (510) 771-1000 FAX: (510) 661-0888

*This report shall not be reproduced except in full, without the written approval of UL Verification Services Inc.*

Band

LTE25

15MHz

16QAM

**UL Verification Services, Inc.**
**Above 1GHz High Frequency Substitution Measurement**

**Company:** LG
**Project #:** 15I20514
**Date:** 4/23/2015
**Test Engineer:** Angel Escamilla
**Configuration:** X-pos EUT, Ac Charger, Headset
**Location:** Chamber C
**Mode:** LTE_16QAM Band 25 Harmonics, 15MHz Bandwidth

| f MHz | SG reading (dBm) | Ant. Pol. (H/V) | Distance (m) | Preamp (dB) | Filter (dB) | EIRP (dBm) | Limit (dBm) | Delta (dB) | Notes |
|---|---|---|---|---|---|---|---|---|---|
| Low Ch, 1857.5 | | | | | | | | | |
| 3715.00 | -21.3 | V | 3.0 | 35.8 | 1.0 | -56.1 | -13.0 | -43.1 | |
| 5572.50 | -16.8 | V | 3.0 | 35.5 | 1.0 | -51.3 | -13.0 | -38.3 | |
| 7430.00 | -13.5 | V | 3.0 | 35.7 | 1.0 | -48.2 | -13.0 | -35.2 | |
| 3715.00 | -21.6 | H | 3.0 | 35.8 | 1.0 | -56.4 | -13.0 | -43.4 | |
| 5572.50 | -15.5 | H | 3.0 | 35.5 | 1.0 | -49.9 | -13.0 | -36.9 | |
| 7430.00 | -12.4 | H | 3.0 | 35.7 | 1.0 | -47.1 | -13.0 | -34.1 | |
| Mid Ch, 1882.5 | | | | | | | | | |
| 3815.00 | -20.5 | V | 3.0 | 35.8 | 1.0 | -55.3 | -13.0 | -42.3 | |
| 5722.50 | -14.2 | V | 3.0 | 35.5 | 1.0 | -48.7 | -13.0 | -35.7 | |
| 7630.00 | -13.5 | V | 3.0 | 35.7 | 1.0 | -48.2 | -13.0 | -35.2 | |
| 3815.00 | -20.7 | H | 3.0 | 35.8 | 1.0 | -55.5 | -13.0 | -42.5 | |
| 5722.50 | -16.5 | H | 3.0 | 35.5 | 1.0 | -50.9 | -13.0 | -37.9 | |
| 7630.00 | -10.1 | H | 3.0 | 35.7 | 1.0 | -44.8 | -13.0 | -31.8 | |
| High Ch, 1907.5 | | | | | | | | | |
| 3815.00 | -21.1 | V | 3.0 | 35.8 | 1.0 | -55.8 | -13.0 | -42.8 | |
| 5722.50 | -12.6 | V | 3.0 | 35.5 | 1.0 | -47.1 | -13.0 | -34.1 | |
| 7630.00 | -11.8 | V | 3.0 | 35.8 | 1.0 | -46.6 | -13.0 | -33.6 | |
| 3815.00 | -21.4 | H | 3.0 | 35.8 | 1.0 | -56.2 | -13.0 | -43.2 | |
| 5722.50 | -14.8 | H | 3.0 | 35.5 | 1.0 | -49.3 | -13.0 | -36.3 | |
| 7630.00 | -13.0 | H | 3.0 | 35.8 | 1.0 | -47.7 | -13.0 | -34.7 | |



UL VERFICATION SERVICES FORM ID: FCC_22_24_27_90
47173 BENICIA STREET, FREMONT, CA 94538, USA TEL: (510) 771-1000 FAX: (510) 661-0888

*This report shall not be reproduced except in full, without the written approval of UL Verification Services Inc.*

Band

LTE25

15MHz

QPSK

**UL Verification Services, Inc.**
**Above 1GHz High Frequency Substitution Measurement**

**Company:** LG
**Project #:** 15I20514
**Date:** 4/23/2015
**Test Engineer:** Angel Escamilla
**Configuration:** X-pos EUT, Ac Charger, Headset
**Location:** Chamber C
**Mode:** LTE_QPSK Band 25 Harmonics, 15MHz Bandwidth

| f MHz | SG reading (dBm) | Ant. Pol. (H/V) | Distance (m) | Preamp (dB) | Filter (dB) | EIRP (dBm) | Limit (dBm) | Delta (dB) | Notes |
|---|---|---|---|---|---|---|---|---|---|
| Low Ch, 1857.5 | | | | | | | | | |
| 3715.00 | -20.8 | V | 3.0 | 35.8 | 1.0 | -55.6 | -13.0 | -42.6 | |
| 5572.50 | -16.3 | V | 3.0 | 35.5 | 1.0 | -50.8 | -13.0 | -37.8 | |
| 7430.00 | -13.0 | V | 3.0 | 35.7 | 1.0 | -47.8 | -13.0 | -34.8 | |
| 3715.00 | -21.3 | H | 3.0 | 35.8 | 1.0 | -56.2 | -13.0 | -43.2 | |
| 5572.50 | -13.8 | H | 3.0 | 35.5 | 1.0 | -48.3 | -13.0 | -35.3 | |
| 7430.00 | -12.4 | H | 3.0 | 35.7 | 1.0 | -47.1 | -13.0 | -34.1 | |
| Mid Ch, 1882.5 | | | | | | | | | |
| 3765.00 | -20.3 | V | 3.0 | 35.8 | 1.0 | -55.1 | -13.0 | -42.1 | |
| 5647.50 | -15.8 | V | 3.0 | 35.5 | 1.0 | -50.3 | -13.0 | -37.3 | |
| 7530.00 | -12.4 | V | 3.0 | 35.7 | 1.0 | -47.2 | -13.0 | -34.2 | |
| 3765.00 | -20.5 | H | 3.0 | 35.8 | 1.0 | -55.3 | -13.0 | -42.3 | |
| 5647.50 | -16.1 | H | 3.0 | 35.5 | 1.0 | -50.6 | -13.0 | -37.6 | |
| 7530.00 | -11.0 | H | 3.0 | 35.7 | 1.0 | -45.7 | -13.0 | -32.7 | |
| High Ch, 1907.5 | | | | | | | | | |
| 3815.00 | -19.7 | V | 3.0 | 35.8 | 1.0 | -54.4 | -13.0 | -41.4 | |
| 5722.50 | -12.5 | V | 3.0 | 35.5 | 1.0 | -47.0 | -13.0 | -34.0 | |
| 7630.00 | -12.0 | V | 3.0 | 35.8 | 1.0 | -46.7 | -13.0 | -33.7 | |
| 3815.00 | -21.5 | H | 3.0 | 35.8 | 1.0 | -56.3 | -13.0 | -43.3 | |
| 5722.50 | -14.0 | H | 3.0 | 35.5 | 1.0 | -48.5 | -13.0 | -35.5 | |
| 7630.00 | -12.6 | H | 3.0 | 35.8 | 1.0 | -47.3 | -13.0 | -34.3 | |


UL VERFICATION SERVICES FORM ID: FCC_22_24_27_90
47173 BENICIA STREET, FREMONT, CA 94538, USA TEL: (510) 771-1000 FAX: (510) 661-0888
*This report shall not be reproduced except in full, without the written approval of UL Verification Services Inc.*

Band

LTE25

10MHz

16QAM

**UL Verification Services, Inc.**
**Above 1GHz High Frequency Substitution Measurement**

**Company:** LG
**Project #:** 15I20514
**Date:** 4/23/2015
**Test Engineer:** Angel Escamilla
**Configuration:** X-pos EUT, Ac Charger, Headset
**Location:** Chamber C
**Mode:** LTE_16QAM Band 25 Harmonics, 10MHz Bandwidth

| f MHz | SG reading (dBm) | Ant. Pol. (H/V) | Distance (m) | Preamp (dB) | Filter (dB) | EIRP (dBm) | Limit (dBm) | Delta (dB) | Notes |
|---|---|---|---|---|---|---|---|---|---|
| Low Ch, 1855 | | | | | | | | | |
| 3710.00 | -21.4 | V | 3.0 | 35.9 | 1.0 | -56.2 | -13.0 | -43.2 | |
| 5565.00 | -14.4 | V | 3.0 | 35.5 | 1.0 | -48.9 | -13.0 | -35.9 | |
| 7420.00 | -13.7 | V | 3.0 | 35.7 | 1.0 | -48.4 | -13.0 | -35.4 | |
| 3710.00 | -20.1 | H | 3.0 | 35.9 | 1.0 | -55.0 | -13.0 | -42.0 | |
| 5565.00 | -14.0 | H | 3.0 | 35.5 | 1.0 | -48.5 | -13.0 | -35.5 | |
| 7420.00 | -13.4 | H | 3.0 | 35.7 | 1.0 | -48.1 | -13.0 | -35.1 | |
| Mid Ch, 1882.5 | | | | | | | | | |
| 3765.00 | -21.4 | V | 3.0 | 35.8 | 1.0 | -56.3 | -13.0 | -43.3 | |
| 5647.50 | -16.7 | V | 3.0 | 35.5 | 1.0 | -51.2 | -13.0 | -38.2 | |
| 7530.00 | -10.9 | V | 3.0 | 35.7 | 1.0 | -45.7 | -13.0 | -32.7 | |
| 3765.00 | -21.2 | H | 3.0 | 35.8 | 1.0 | -56.1 | -13.0 | -43.1 | |
| 5647.50 | -16.5 | H | 3.0 | 35.5 | 1.0 | -51.0 | -13.0 | -38.0 | |
| 7530.00 | -13.2 | H | 3.0 | 35.7 | 1.0 | -48.0 | -13.0 | -35.0 | |
| High Ch, 1910 | | | | | | | | | |
| 3820.00 | -20.8 | V | 3.0 | 35.8 | 1.0 | -55.6 | -13.0 | -42.6 | |
| 5730.00 | -15.7 | V | 3.0 | 35.5 | 1.0 | -50.2 | -13.0 | -37.2 | |
| 7640.00 | -10.6 | V | 3.0 | 35.8 | 1.0 | -45.4 | -13.0 | -32.4 | |
| 3820.00 | -20.8 | H | 3.0 | 35.8 | 1.0 | -55.6 | -13.0 | -42.6 | |
| 5730.00 | -16.6 | H | 3.0 | 35.5 | 1.0 | -51.1 | -13.0 | -38.1 | |
| 7640.00 | -12.2 | H | 3.0 | 35.8 | 1.0 | -46.9 | -13.0 | -33.9 | |




*This report shall not be reproduced except in full, without the written approval of UL Verification Services Inc.*

**UL Verification Services, Inc.**
**Above 1GHz High Frequency Substitution Measurement**

**Company:** LG
**Project #:** 15I20514
**Date:** 4/23/2015
**Test Engineer:** Angel Escamilla
**Configuration:** X-pos EUT, Ac Charger, Headset
**Location:** Chamber C
**Mode:** LTE_QPSK Band 25 Harmonics, 10MHz Bandwidth

Band
LTE25
10MHz
QPSK

| f MHz | SG reading (dBm) | Ant. Pol. (H/V) | Distance (m) | Preamp (dB) | Filter (dB) | EIRP (dBm) | Limit (dBm) | Delta (dB) | Notes |
|---|---|---|---|---|---|---|---|---|---|
| Low Ch, 1855 | | | | | | | | | |
| 3710.00 | -21.1 | V | 3.0 | 35.9 | 1.0 | -56.0 | -13.0 | -43.0 | |
| 5565.00 | -14.3 | V | 3.0 | 35.5 | 1.0 | -48.8 | -13.0 | -35.8 | |
| 7420.00 | -13.6 | V | 3.0 | 35.7 | 1.0 | -48.3 | -13.0 | -35.3 | |
| 3710.00 | -19.5 | H | 3.0 | 35.9 | 1.0 | -54.3 | -13.0 | -41.3 | |
| 5565.00 | -12.7 | H | 3.0 | 35.5 | 1.0 | -47.2 | -13.0 | -34.2 | |
| 7420.00 | -12.3 | H | 3.0 | 35.7 | 1.0 | -47.1 | -13.0 | -34.1 | |
| Mid Ch, 1882.5 | | | | | | | | | |
| 3765.00 | -21.3 | V | 3.0 | 35.8 | 1.0 | -56.2 | -13.0 | -43.2 | |
| 5647.50 | -17.0 | V | 3.0 | 35.5 | 1.0 | -51.5 | -13.0 | -38.5 | |
| 7530.00 | -10.6 | V | 3.0 | 35.7 | 1.0 | -45.3 | -13.0 | -32.3 | |
| 3765.00 | -20.4 | H | 3.0 | 35.8 | 1.0 | -55.2 | -13.0 | -42.2 | |
| 5647.50 | -16.6 | H | 3.0 | 35.5 | 1.0 | -51.1 | -13.0 | -38.1 | |
| 7530.00 | -13.4 | H | 3.0 | 35.7 | 1.0 | -48.1 | -13.0 | -35.1 | |
| High Ch, 1910 | | | | | | | | | |
| 3820.00 | -20.4 | V | 3.0 | 35.8 | 1.0 | -55.2 | -13.0 | -42.2 | |
| 5730.00 | -16.4 | V | 3.0 | 35.5 | 1.0 | -50.9 | -13.0 | -37.9 | |
| 7640.00 | -11.3 | V | 3.0 | 35.8 | 1.0 | -46.1 | -13.0 | -33.1 | |
| 3820.00 | -21.0 | H | 3.0 | 35.8 | 1.0 | -55.8 | -13.0 | -42.8 | |
| 5730.00 | -15.7 | H | 3.0 | 35.5 | 1.0 | -50.2 | -13.0 | -37.2 | |
| 7640.00 | -12.8 | H | 3.0 | 35.8 | 1.0 | -47.6 | -13.0 | -34.6 | |


UL VERFICATION SERVICES FORM ID: FCC_22_24_27_90
47173 BENICIA STREET, FREMONT, CA 94538, USA TEL: (510) 771-1000 FAX: (510) 661-0888
*This report shall not be reproduced except in full, without the written approval of UL Verification Services Inc.*

**UL Verification Services, Inc.**
**Above 1GHz High Frequency Substitution Measurement**

**Company:** LG
**Project #:** 15I20514
**Date:** 4/23/2015
**Test Engineer:** Angel Escamilla
**Configuration:** X-pos EUT, Ac Charger, Headset
**Location:** Chamber C
**Mode:** LTE_16QAM Band 25 Harmonics, 5MHz Bandwidth

Band
LTE25
5MHz
16QAM

| f MHz | SG reading (dBm) | Ant. Pol. (H/V) | Distance (m) | Preamp (dB) | Filter (dB) | EIRP (dBm) | Limit (dBm) | Delta (dB) | Notes |
|---|---|---|---|---|---|---|---|---|---|
| Low Ch, 1852.5 | | | | | | | | | |
| 3705.00 | -21.1 | V | 3.0 | 35.9 | 1.0 | -55.9 | -13.0 | -42.9 | |
| 5557.50 | -16.9 | V | 3.0 | 35.5 | 1.0 | -51.4 | -13.0 | -38.4 | |
| 7410.00 | -13.6 | V | 3.0 | 35.7 | 1.0 | -48.3 | -13.0 | -35.3 | |
| 3705.00 | -18.4 | H | 3.0 | 35.9 | 1.0 | -53.2 | -13.0 | -40.2 | |
| 5557.50 | -15.6 | H | 3.0 | 35.5 | 1.0 | -50.1 | -13.0 | -37.1 | |
| 7410.00 | -13.2 | H | 3.0 | 35.7 | 1.0 | -48.0 | -13.0 | -35.0 | |
| Mid Ch, 1882.5 | | | | | | | | | |
| 3765.00 | -21.3 | V | 3.0 | 35.8 | 1.0 | -56.1 | -13.0 | -43.1 | |
| 5647.50 | -17.2 | V | 3.0 | 35.5 | 1.0 | -51.7 | -13.0 | -38.7 | |
| 7530.00 | -11.5 | V | 3.0 | 35.7 | 1.0 | -46.3 | -13.0 | -33.3 | |
| 3765.00 | -21.7 | H | 3.0 | 35.8 | 1.0 | -56.5 | -13.0 | -43.5 | |
| 5647.50 | -17.0 | H | 3.0 | 35.5 | 1.0 | -51.5 | -13.0 | -38.5 | |
| 7530.00 | -12.9 | H | 3.0 | 35.7 | 1.0 | -47.6 | -13.0 | -34.6 | |
| High Ch, 1912.5 | | | | | | | | | |
| 3825.00 | -18.3 | V | 3.0 | 35.8 | 1.0 | -53.0 | -13.0 | -40.0 | |
| 5737.50 | -15.6 | V | 3.0 | 35.5 | 1.0 | -50.1 | -13.0 | -37.1 | |
| 7650.00 | -10.1 | V | 3.0 | 35.8 | 1.0 | -44.9 | -13.0 | -31.9 | |
| 3825.00 | -21.2 | H | 3.0 | 35.8 | 1.0 | -55.9 | -13.0 | -42.9 | |
| 5737.50 | -14.4 | H | 3.0 | 35.5 | 1.0 | -48.9 | -13.0 | -35.9 | |
| 7650.00 | -13.0 | H | 3.0 | 35.8 | 1.0 | -47.7 | -13.0 | -34.7 | |


UL VERFICATION SERVICES FORM ID: FCC_22_24_27_90
47173 BENICIA STREET, FREMONT, CA 94538, USA TEL: (510) 771-1000 FAX: (510) 661-0888
*This report shall not be reproduced except in full, without the written approval of UL Verification Services Inc.*

**UL Verification Services, Inc.**
**Above 1GHz High Frequency Substitution Measurement**

**Company:** LG
**Project #:** 15I20514
**Date:** 4/23/2015
**Test Engineer:** Angel Escamilla
**Configuration:** X-pos EUT, Ac Charger, Headset
**Location:** Chamber C
**Mode:** LTE_QPSK Band 25 Harmonics, 5MHz Bandwidth

Band
LTE25
5MHz
QPSK

| f MHz | SG reading (dBm) | Ant. Pol. (H/V) | Distance (m) | Preamp (dB) | Filter (dB) | EIRP (dBm) | Limit (dBm) | Delta (dB) | Notes |
|---|---|---|---|---|---|---|---|---|---|
| Low Ch, 1852.5 | | | | | | | | | |
| 3705.00 | -20.7 | V | 3.0 | 35.9 | 1.0 | -55.5 | -13.0 | -42.5 | |
| 5557.50 | -16.8 | V | 3.0 | 35.5 | 1.0 | -51.3 | -13.0 | -38.3 | |
| 7410.00 | -13.9 | V | 3.0 | 35.7 | 1.0 | -48.6 | -13.0 | -35.6 | |
| 3705.00 | -18.5 | H | 3.0 | 35.9 | 1.0 | -53.3 | -13.0 | -40.3 | |
| 5557.50 | -14.6 | H | 3.0 | 35.5 | 1.0 | -49.0 | -13.0 | -36.0 | |
| 7410.00 | -12.6 | H | 3.0 | 35.7 | 1.0 | -47.3 | -13.0 | -34.3 | |
| Mid Ch, 1882.5 | | | | | | | | | |
| 3765.00 | -20.4 | V | 3.0 | 35.8 | 1.0 | -55.2 | -13.0 | -42.2 | |
| 5647.50 | -16.8 | V | 3.0 | 35.5 | 1.0 | -51.3 | -13.0 | -38.3 | |
| 7530.00 | -12.5 | V | 3.0 | 35.7 | 1.0 | -47.2 | -13.0 | -34.2 | |
| 3765.00 | -20.6 | H | 3.0 | 35.8 | 1.0 | -55.5 | -13.0 | -42.5 | |
| 5647.50 | -17.1 | H | 3.0 | 35.5 | 1.0 | -51.6 | -13.0 | -38.6 | |
| 7530.00 | -13.0 | H | 3.0 | 35.7 | 1.0 | -47.7 | -13.0 | -34.7 | |
| High Ch, 1912.5 | | | | | | | | | |
| 3825.00 | -18.6 | V | 3.0 | 35.8 | 1.0 | -53.4 | -13.0 | -40.4 | |
| 5737.50 | -14.0 | V | 3.0 | 35.5 | 1.0 | -48.5 | -13.0 | -35.5 | |
| 7650.00 | -14.8 | V | 3.0 | 35.8 | 1.0 | -49.6 | -13.0 | -36.6 | |
| 3825.00 | -20.3 | H | 3.0 | 35.8 | 1.0 | -55.1 | -13.0 | -42.1 | |
| 5737.50 | -14.7 | H | 3.0 | 35.5 | 1.0 | -49.2 | -13.0 | -36.2 | |
| 7650.00 | -11.0 | H | 3.0 | 35.8 | 1.0 | -45.8 | -13.0 | -32.8 | |


UL VERFICATION SERVICES FORM ID: FCC_22_24_27_90
47173 BENICIA STREET, FREMONT, CA 94538, USA TEL: (510) 771-1000 FAX: (510) 661-0888
*This report shall not be reproduced except in full, without the written approval of UL Verification Services Inc.*

**UL Verification Services, Inc.**
**Above 1GHz High Frequency Substitution Measurement**

**Company:** LG
**Project #:** 15I20514
**Date:** 4/23/2015
**Test Engineer:** Angel Escamilla
**Configuration:** X-pos EUT, Ac Charger, Headset
**Location:** Chamber C
**Mode:** LTE_16QAM Band 25 Harmonics, 3MHz Bandwidth

Band
LTE25
3MHz
16QAM

| f MHz | SG reading (dBm) | Ant. Pol. (H/V) | Distance (m) | Preamp (dB) | Filter (dB) | EIRP (dBm) | Limit (dBm) | Delta (dB) | Notes |
|---|---|---|---|---|---|---|---|---|---|
| Low Ch, 1851.5 | | | | | | | | | |
| 3703.00 | -19.7 | V | 3.0 | 35.9 | 1.0 | -54.5 | -13.0 | -41.5 | |
| 5554.50 | -15.9 | V | 3.0 | 35.5 | 1.0 | -50.3 | -13.0 | -37.3 | |
| 7406.00 | -13.6 | V | 3.0 | 35.7 | 1.0 | -48.3 | -13.0 | -35.3 | |
| 3703.00 | -14.9 | H | 3.0 | 35.9 | 1.0 | -49.7 | -13.0 | -36.7 | |
| 5554.50 | -16.6 | H | 3.0 | 35.5 | 1.0 | -51.1 | -13.0 | -38.1 | |
| 7406.00 | -12.9 | H | 3.0 | 35.7 | 1.0 | -47.6 | -13.0 | -34.6 | |
| Mid Ch, 1882.5 | | | | | | | | | |
| 3765.00 | -20.7 | V | 3.0 | 35.8 | 1.0 | -55.5 | -13.0 | -42.5 | |
| 5647.50 | -17.1 | V | 3.0 | 35.5 | 1.0 | -51.6 | -13.0 | -38.6 | |
| 7530.00 | -13.5 | V | 3.0 | 35.7 | 1.0 | -48.3 | -13.0 | -35.3 | |
| 3765.00 | -21.7 | H | 3.0 | 35.8 | 1.0 | -56.6 | -13.0 | -43.6 | |
| 5647.50 | -17.1 | H | 3.0 | 35.5 | 1.0 | -51.6 | -13.0 | -38.6 | |
| 7530.00 | -12.7 | H | 3.0 | 35.7 | 1.0 | -47.5 | -13.0 | -34.5 | |
| High Ch, 1913.5 | | | | | | | | | |
| 3827.00 | -19.7 | V | 3.0 | 35.8 | 1.0 | -54.5 | -13.0 | -41.5 | |
| 5740.50 | -16.4 | V | 3.0 | 35.5 | 1.0 | -50.9 | -13.0 | -37.9 | |
| 7654.00 | -11.4 | V | 3.0 | 35.8 | 1.0 | -46.2 | -13.0 | -33.2 | |
| 3827.00 | -20.3 | H | 3.0 | 35.8 | 1.0 | -55.0 | -13.0 | -42.0 | |
| 5740.50 | -16.1 | H | 3.0 | 35.5 | 1.0 | -50.6 | -13.0 | -37.6 | |
| 7654.00 | -11.6 | H | 3.0 | 35.8 | 1.0 | -46.4 | -13.0 | -33.4 | |


UL VERFICATION SERVICES FORM ID: FCC_22_24_27_90
47173 BENICIA STREET, FREMONT, CA 94538, USA TEL: (510) 771-1000 FAX: (510) 661-0888
*This report shall not be reproduced except in full, without the written approval of UL Verification Services Inc.*

Band

LTE25

3MHz

QPSK

**UL Verification Services, Inc.**
**Above 1GHz High Frequency Substitution Measurement**

**Company:** LG
**Project #:** 15I20514
**Date:** 4/23/2015
**Test Engineer:** Angel Escamilla
**Configuration:** X-pos EUT, Ac Charger, Headset
**Location:** Chamber C
**Mode:** LTE_QPSK Band 25 Harmonics, 3MHz Bandwidth

| f MHz | SG reading (dBm) | Ant. Pol. (H/V) | Distance (m) | Preamp (dB) | Filter (dB) | EIRP (dBm) | Limit (dBm) | Delta (dB) | Notes |
|---|---|---|---|---|---|---|---|---|---|
| Low Ch, 1851.5 | | | | | | | | | |
| 3703.00 | -18.8 | V | 3.0 | 35.9 | 1.0 | -53.7 | -13.0 | -40.7 | |
| 5554.50 | -16.4 | V | 3.0 | 35.5 | 1.0 | -50.8 | -13.0 | -37.8 | |
| 7406.00 | -12.8 | V | 3.0 | 35.7 | 1.0 | -47.6 | -13.0 | -34.6 | |
| 3703.00 | -16.1 | H | 3.0 | 35.9 | 1.0 | -50.9 | -13.0 | -37.9 | |
| 5554.50 | -17.0 | H | 3.0 | 35.5 | 1.0 | -51.5 | -13.0 | -38.5 | |
| 7406.00 | -13.4 | H | 3.0 | 35.7 | 1.0 | -48.1 | -13.0 | -35.1 | |
| Mid Ch, 1882.5 | | | | | | | | | |
| 3765.00 | -20.3 | V | 3.0 | 35.8 | 1.0 | -55.1 | -13.0 | -42.1 | |
| 5647.50 | -17.2 | V | 3.0 | 35.5 | 1.0 | -51.7 | -13.0 | -38.7 | |
| 7530.00 | -13.1 | V | 3.0 | 35.7 | 1.0 | -47.8 | -13.0 | -34.8 | |
| 3765.00 | -21.1 | H | 3.0 | 35.8 | 1.0 | -55.9 | -13.0 | -42.9 | |
| 5647.50 | -16.7 | H | 3.0 | 35.5 | 1.0 | -51.2 | -13.0 | -38.2 | |
| 7530.00 | -12.5 | H | 3.0 | 35.7 | 1.0 | -47.3 | -13.0 | -34.3 | |
| High Ch, 1913.5 | | | | | | | | | |
| 3827.00 | -18.3 | V | 3.0 | 35.8 | 1.0 | -53.1 | -13.0 | -40.1 | |
| 5740.50 | -15.0 | V | 3.0 | 35.5 | 1.0 | -49.5 | -13.0 | -36.5 | |
| 7654.00 | -11.3 | V | 3.0 | 35.8 | 1.0 | -46.0 | -13.0 | -33.0 | |
| 3827.00 | -20.7 | H | 3.0 | 35.8 | 1.0 | -55.5 | -13.0 | -42.5 | |
| 5740.50 | -14.9 | H | 3.0 | 35.5 | 1.0 | -49.4 | -13.0 | -36.4 | |
| 7654.00 | -12.8 | H | 3.0 | 35.8 | 1.0 | -47.5 | -13.0 | -34.5 | |




*This report shall not be reproduced except in full, without the written approval of UL Verification Services Inc.*

Band

LTE25

1.4MHz

16QAM

**UL Verification Services, Inc.**
**Above 1GHz High Frequency Substitution Measurement**

**Company:** LG
**Project #:** 15I20514
**Date:** 4/23/2015
**Test Engineer:** Angel Escamilla
**Configuration:** X-pos EUT, Ac Charger, Headset
**Location:** Chamber C
**Mode:** LTE_16QAM Band 25 Harmonics, 1.4MHz Bandwidth

| f MHz | SG reading (dBm) | Ant. Pol. (H/V) | Distance (m) | Preamp (dB) | Filter (dB) | EIRP (dBm) | Limit (dBm) | Delta (dB) | Notes |
|---|---|---|---|---|---|---|---|---|---|
| Low Ch, 1850.7 | | | | | | | | | |
| 3701.40 | -21.1 | V | 3.0 | 35.9 | 1.0 | -55.9 | -13.0 | -42.9 | |
| 5552.10 | -15.4 | V | 3.0 | 35.5 | 1.0 | -49.8 | -13.0 | -36.8 | |
| 7402.80 | -14.2 | V | 3.0 | 35.7 | 1.0 | -49.0 | -13.0 | -36.0 | |
| 3701.40 | -17.9 | H | 3.0 | 35.9 | 1.0 | -52.8 | -13.0 | -39.8 | |
| 5552.10 | -14.5 | H | 3.0 | 35.5 | 1.0 | -49.0 | -13.0 | -36.0 | |
| 7402.80 | -11.2 | H | 3.0 | 35.7 | 1.0 | -45.9 | -13.0 | -32.9 | |
| Mid Ch, 1882.5 | | | | | | | | | |
| 3765.00 | -21.5 | V | 3.0 | 35.8 | 1.0 | -44.7 | -13.0 | -31.7 | |
| 5647.50 | -16.1 | V | 3.0 | 35.5 | 1.0 | -50.6 | -13.0 | -37.6 | |
| 7530.00 | -12.7 | V | 3.0 | 35.7 | 1.0 | -47.4 | -13.0 | -34.4 | |
| 3765.00 | -21.5 | H | 3.0 | 35.8 | 1.0 | -56.3 | -13.0 | -43.3 | |
| 5647.50 | -13.8 | H | 3.0 | 35.5 | 1.0 | -48.3 | -13.0 | -35.3 | |
| 7530.00 | -10.6 | H | 3.0 | 35.7 | 1.0 | -45.4 | -13.0 | -32.4 | |
| High Ch, 1914.3 | | | | | | | | | |
| 3828.60 | -16.6 | V | 3.0 | 35.8 | 1.0 | -51.4 | -13.0 | -38.4 | |
| 5742.90 | -12.2 | V | 3.0 | 35.5 | 1.0 | -46.7 | -13.0 | -33.7 | |
| 7657.20 | -12.0 | V | 3.0 | 35.8 | 1.0 | -46.8 | -13.0 | -33.8 | |
| 3828.60 | -20.2 | H | 3.0 | 35.8 | 1.0 | -55.0 | -13.0 | -42.0 | |
| 5742.90 | -16.4 | H | 3.0 | 35.5 | 1.0 | -50.9 | -13.0 | -37.9 | |
| 7657.20 | -11.0 | H | 3.0 | 35.8 | 1.0 | -45.8 | -13.0 | -32.8 | |


UL VERFICATION SERVICES FORM ID: FCC_22_24_27_90
47173 BENICIA STREET, FREMONT, CA 94538, USA TEL: (510) 771-1000 FAX: (510) 661-0888
*This report shall not be reproduced except in full, without the written approval of UL Verification Services Inc.*

Band

LTE25

1.4MHz

QPSK

**UL Verification Services, Inc.**
**Above 1GHz High Frequency Substitution Measurement**

**Company:** LG
**Project #:** 15I20514
**Date:** 4/23/2015
**Test Engineer:** Angel Escamilla
**Configuration:** X-pos EUT, Ac Charger, Headset
**Location:** Chamber C
**Mode:** LTE_QPSK Band 25 Harmonics, 1.4MHz Bandwidth

| f MHz | SG reading (dBm) | Ant. Pol. (H/V) | Distance (m) | Preamp (dB) | Filter (dB) | EIRP (dBm) | Limit (dBm) | Delta (dB) | Notes |
|---|---|---|---|---|---|---|---|---|---|
| Low Ch, 1850.7 | | | | | | | | | |
| 3701.40 | -20.8 | V | 3.0 | 35.9 | 1.0 | -55.7 | -13.0 | -42.7 | |
| 5552.10 | -17.1 | V | 3.0 | 35.5 | 1.0 | -51.6 | -13.0 | -38.6 | |
| 7402.80 | -14.0 | V | 3.0 | 35.7 | 1.0 | -48.7 | -13.0 | -35.7 | |
| 3701.40 | -17.4 | H | 3.0 | 35.9 | 1.0 | -52.2 | -13.0 | -39.2 | |
| 5552.10 | -15.1 | H | 3.0 | 35.5 | 1.0 | -49.5 | -13.0 | -36.5 | |
| 7402.80 | -11.0 | H | 3.0 | 35.7 | 1.0 | -45.7 | -13.0 | -32.7 | |
| Mid Ch, 1882.5 | | | | | | | | | |
| 3765.00 | -19.8 | V | 3.0 | 35.8 | 1.0 | -54.6 | -13.0 | -41.6 | |
| 5647.50 | -17.3 | V | 3.0 | 35.5 | 1.0 | -51.8 | -13.0 | -38.8 | |
| 7530.00 | -14.3 | V | 3.0 | 35.7 | 1.0 | -49.0 | -13.0 | -36.0 | |
| 3765.00 | -19.9 | H | 3.0 | 35.8 | 1.0 | -54.7 | -13.0 | -41.7 | |
| 5647.50 | -13.3 | H | 3.0 | 35.5 | 1.0 | -47.8 | -13.0 | -34.8 | |
| 7530.00 | -12.1 | H | 3.0 | 35.7 | 1.0 | -46.9 | -13.0 | -33.9 | |
| High Ch, 1914.3 | | | | | | | | | |
| 3828.60 | -16.2 | V | 3.0 | 35.8 | 1.0 | -50.9 | -13.0 | -37.9 | |
| 5742.90 | -12.5 | V | 3.0 | 35.5 | 1.0 | -47.0 | -13.0 | -34.0 | |
| 7657.20 | -12.6 | V | 3.0 | 35.8 | 1.0 | -47.3 | -13.0 | -34.3 | |
| 3828.60 | -19.9 | H | 3.0 | 35.8 | 1.0 | -54.6 | -13.0 | -41.6 | |
| 5742.90 | -16.8 | H | 3.0 | 35.5 | 1.0 | -51.3 | -13.0 | -38.3 | |
| 7657.20 | -12.3 | H | 3.0 | 35.8 | 1.0 | -47.1 | -13.0 | -34.1 | |



UL VERFICATION SERVICES FORM ID: FCC_22_24_27_90
47173 BENICIA STREET, FREMONT, CA 94538, USA TEL: (510) 771-1000 FAX: (510) 661-0888

*This report shall not be reproduced except in full, without the written approval of UL Verification Services Inc.*

## LTE Band 26

**UL Verification Services, Inc.**
**Above 1GHz High Frequency Substitution Measurement**

**Company:** LG Electronics
**Project #:** 15I20514
**Date:** 4/27/2015
**Test Engineer:** D. Mun
**Configuration:** EUT/ AC Charger/ Headset
**Location:** Chamber F
**Mode:** LTE_16QAM Band 26 Harmonics, 15MHz Bandwidth

Band

LTE26

15MHz

16QAM

| f MHz | SG reading (dBm) | Ant. Pol. (H/V) | Distance (m) | Preamp (dB) | Filter (dB) | EIRP (dBm) | Limit (dBm) | Delta (dB) | Notes |
|---|---|---|---|---|---|---|---|---|---|
| Low Ch, 831.5 | | | | | | | | | |
| 1643.00 | -27.6 | V | 3.0 | 37.0 | 1.0 | -63.7 | -13.0 | -50.7 | |
| 2464.50 | -24.0 | V | 3.0 | 36.4 | 1.0 | -59.4 | -13.0 | -46.4 | |
| 3286.00 | 111.3 | V | 3.0 | 36.2 | 1.0 | 76.2 | -13.0 | 89.2 | |
| 1643.00 | -29.1 | H | 3.0 | 37.0 | 1.0 | -65.2 | -13.0 | -52.2 | |
| 2464.50 | -24.8 | H | 3.0 | 36.4 | 1.0 | -60.2 | -13.0 | -47.2 | |
| 3286.00 | -24.4 | H | 3.0 | 36.2 | 1.0 | -59.6 | -13.0 | -46.6 | |
| Mid Ch, 836.5 | | | | | | | | | |
| 1663.00 | -28.4 | V | 3.0 | 37.0 | 1.0 | -64.4 | -13.0 | -51.4 | |
| 2494.50 | -21.9 | V | 3.0 | 36.4 | 1.0 | -57.3 | -13.0 | -44.3 | |
| 3326.00 | -22.8 | V | 3.0 | 36.1 | 1.0 | -58.0 | -13.0 | -45.0 | |
| 1663.00 | -29.0 | H | 3.0 | 37.0 | 1.0 | -65.0 | -13.0 | -52.0 | |
| 2494.50 | -23.5 | H | 3.0 | 36.4 | 1.0 | -58.9 | -13.0 | -45.9 | |
| 3326.00 | -22.9 | H | 3.0 | 36.1 | 1.0 | -58.0 | -13.0 | -45.0 | |
| High Ch, 841.5 | | | | | | | | | |
| 1683.00 | -27.6 | V | 3.0 | 37.0 | 1.0 | -63.6 | -13.0 | -50.6 | |
| 2524.50 | -22.4 | V | 3.0 | 36.4 | 1.0 | -57.8 | -13.0 | -44.8 | |
| 3366.00 | -22.3 | V | 3.0 | 36.1 | 1.0 | -57.4 | -13.0 | -44.4 | |
| 1683.00 | -27.8 | H | 3.0 | 37.0 | 1.0 | -63.8 | -13.0 | -50.8 | |
| 2524.50 | -25.7 | H | 3.0 | 36.4 | 1.0 | -61.1 | -13.0 | -48.1 | |
| 3366.00 | -24.0 | H | 3.0 | 36.1 | 1.0 | -59.1 | -13.0 | -46.1 | |



UL VERFICATION SERVICES FORM ID: FCC_22_24_27_90
47173 BENICIA STREET, FREMONT, CA 94538, USA TEL: (510) 771-1000 FAX: (510) 661-0888

*This report shall not be reproduced except in full, without the written approval of UL Verification Services Inc.*

Band

LTE26

15MHz

QPSK

**UL Verification Services, Inc.**
**Above 1GHz High Frequency Substitution Measurement**

**Company:** LG Electronics
**Project #:** 15I20514
**Date:** 4/27/2015
**Test Engineer:** D. Mun
**Configuration:** EUT/ AC Charger/ Headset
**Location:** Chamber F
**Mode:** LTE_QPSK Band 26 Harmonics, 15MHz Bandwidth

| f MHz | SG reading (dBm) | Ant. Pol. (H/V) | Distance (m) | Preamp (dB) | Filter (dB) | EIRP (dBm) | Limit (dBm) | Delta (dB) | Notes |
|---|---|---|---|---|---|---|---|---|---|
| Low Ch, 831.5 | | | | | | | | | |
| 1643.00 | -28.8 | V | 3.0 | 37.0 | 1.0 | -64.8 | -13.0 | -51.8 | |
| 2464.50 | -22.2 | V | 3.0 | 36.4 | 1.0 | -57.6 | -13.0 | -44.6 | |
| 3286.00 | -23.1 | V | 3.0 | 36.2 | 1.0 | -58.3 | -13.0 | -45.3 | |
| 1643.00 | -28.3 | H | 3.0 | 37.0 | 1.0 | -64.4 | -13.0 | -51.4 | |
| 2464.50 | -24.8 | H | 3.0 | 36.4 | 1.0 | -60.2 | -13.0 | -47.2 | |
| 3286.00 | -23.3 | H | 3.0 | 36.2 | 1.0 | -58.4 | -13.0 | -45.4 | |
| Mid Ch, 836.5 | | | | | | | | | |
| 1663.00 | -28.2 | V | 3.0 | 37.0 | 1.0 | -64.2 | -13.0 | -51.2 | |
| 2494.50 | -22.0 | V | 3.0 | 36.4 | 1.0 | -57.5 | -13.0 | -44.5 | |
| 3326.00 | -22.5 | V | 3.0 | 36.1 | 1.0 | -57.7 | -13.0 | -44.7 | |
| 1663.00 | -28.8 | H | 3.0 | 37.0 | 1.0 | -64.8 | -13.0 | -51.8 | |
| 2494.50 | -24.3 | H | 3.0 | 36.4 | 1.0 | -59.7 | -13.0 | -46.7 | |
| 3326.00 | -23.2 | H | 3.0 | 36.1 | 1.0 | -58.4 | -13.0 | -45.4 | |
| High Ch, 841.5 | | | | | | | | | |
| 1683.00 | -28.4 | V | 3.0 | 37.0 | 1.0 | -64.3 | -13.0 | -51.3 | |
| 2524.50 | -22.1 | V | 3.0 | 36.4 | 1.0 | -57.5 | -13.0 | -44.5 | |
| 3366.00 | -23.8 | V | 3.0 | 36.1 | 1.0 | -58.9 | -13.0 | -45.9 | |
| 1683.00 | -28.9 | H | 3.0 | 37.0 | 1.0 | -64.9 | -13.0 | -51.9 | |
| 2524.50 | -24.3 | H | 3.0 | 36.4 | 1.0 | -59.7 | -13.0 | -46.7 | |
| 3366.00 | -23.3 | H | 3.0 | 36.1 | 1.0 | -58.4 | -13.0 | -45.4 | |




*This report shall not be reproduced except in full, without the written approval of UL Verification Services Inc.*

**UL Verification Services, Inc.**
**Above 1GHz High Frequency Substitution Measurement**

**Company:** LG Electronics
**Project #:** 15I20514
**Date:** 4/27/2015
**Test Engineer:** D. Mun
**Configuration:** EUT/ AC Charger/ Headset
**Location:** Chamber F
**Mode:** LTE_16QAM Band 26 Harmonics, 10MHz Bandwidth

Band
LTE26
10MHz
16QAM

| f MHz | SG reading (dBm) | Ant. Pol. (H/V) | Distance (m) | Preamp (dB) | Filter (dB) | EIRP (dBm) | Limit (dBm) | Delta (dB) | Notes |
|---|---|---|---|---|---|---|---|---|---|
| Low Ch, 819 | | | | | | | | | |
| 1638.00 | -28.7 | V | 3.0 | 37.0 | 1.0 | -64.7 | -13.0 | -51.7 | |
| 2457.00 | -22.8 | V | 3.0 | 36.4 | 1.0 | -58.2 | -13.0 | -45.2 | |
| 3276.00 | -23.0 | V | 3.0 | 36.2 | 1.0 | -58.2 | -13.0 | -45.2 | |
| 1638.00 | -28.4 | H | 3.0 | 37.0 | 1.0 | -64.5 | -13.0 | -51.5 | |
| 2457.00 | -25.5 | H | 3.0 | 36.4 | 1.0 | -60.9 | -13.0 | -47.9 | |
| 3276.00 | -23.0 | H | 3.0 | 36.2 | 1.0 | -58.1 | -13.0 | -45.1 | |
| Mid Ch, 831.5 | | | | | | | | | |
| 1663.00 | -28.1 | V | 3.0 | 37.0 | 1.0 | -64.1 | -13.0 | -51.1 | |
| 2494.50 | -21.6 | V | 3.0 | 36.4 | 1.0 | -57.1 | -13.0 | -44.1 | |
| 3326.00 | -22.2 | V | 3.0 | 36.1 | 1.0 | -57.3 | -13.0 | -44.3 | |
| 1663.00 | -28.1 | H | 3.0 | 37.0 | 1.0 | -64.1 | -13.0 | -51.1 | |
| 2494.50 | -23.5 | H | 3.0 | 36.4 | 1.0 | -58.9 | -13.0 | -45.9 | |
| 3326.00 | -22.8 | H | 3.0 | 36.1 | 1.0 | -58.0 | -13.0 | -45.0 | |
| High Ch, 844 | | | | | | | | | |
| 1688.00 | -28.3 | V | 3.0 | 37.0 | 1.0 | -64.2 | -13.0 | -51.2 | |
| 2532.00 | -21.3 | V | 3.0 | 36.4 | 1.0 | -56.7 | -13.0 | -43.7 | |
| 3376.00 | -22.8 | V | 3.0 | 36.1 | 1.0 | -57.9 | -13.0 | -44.9 | |
| 1688.00 | -28.1 | H | 3.0 | 37.0 | 1.0 | -64.1 | -13.0 | -51.1 | |
| 2532.00 | -23.9 | H | 3.0 | 36.4 | 1.0 | -59.3 | -13.0 | -46.3 | |
| 3376.00 | -23.2 | H | 3.0 | 36.1 | 1.0 | -58.3 | -13.0 | -45.3 | |


UL VERFICATION SERVICES FORM ID: FCC_22_24_27_90
47173 BENICIA STREET, FREMONT, CA 94538, USA TEL: (510) 771-1000 FAX: (510) 661-0888
*This report shall not be reproduced except in full, without the written approval of UL Verification Services Inc.*

Band

LTE26

10MHz

QPSK

**UL Verification Services, Inc.**
**Above 1GHz High Frequency Substitution Measurement**

**Company:** LG Electronics
**Project #:** 15I20514
**Date:** 4/27/2015
**Test Engineer:** D. Mun
**Configuration:** EUT/ AC Charger/ Headset
**Location:** Chamber F
**Mode:** LTE_QPSK Band 26 Harmonics, 10MHz Bandwidth

| f MHz | SG reading (dBm) | Ant. Pol. (H/V) | Distance (m) | Preamp (dB) | Filter (dB) | EIRP (dBm) | Limit (dBm) | Delta (dB) | Notes |
|---|---|---|---|---|---|---|---|---|---|
| Low Ch, 819 | | | | | | | | | |
| 1638.00 | -27.9 | V | 3.0 | 37.0 | 1.0 | -64.0 | -13.0 | -51.0 | |
| 2457.00 | -24.2 | V | 3.0 | 36.4 | 1.0 | -59.6 | -13.0 | -46.6 | |
| 3276.00 | -22.9 | V | 3.0 | 36.2 | 1.0 | -58.1 | -13.0 | -45.1 | |
| 1638.00 | -28.5 | H | 3.0 | 37.0 | 1.0 | -64.6 | -13.0 | -51.6 | |
| 2457.00 | -24.7 | H | 3.0 | 36.4 | 1.0 | -60.1 | -13.0 | -47.1 | |
| 3276.00 | -23.0 | H | 3.0 | 36.2 | 1.0 | -58.2 | -13.0 | -45.2 | |
| Mid Ch, 831.5 | | | | | | | | | |
| 1663.00 | -28.7 | V | 3.0 | 37.0 | 1.0 | -64.7 | -13.0 | -51.7 | |
| 2494.50 | -22.6 | V | 3.0 | 36.4 | 1.0 | -58.0 | -13.0 | -45.0 | |
| 3326.00 | -22.8 | V | 3.0 | 36.1 | 1.0 | -57.9 | -13.0 | -44.9 | |
| 1663.00 | -28.1 | H | 3.0 | 37.0 | 1.0 | -64.1 | -13.0 | -51.1 | |
| 2494.50 | -22.4 | H | 3.0 | 36.4 | 1.0 | -57.8 | -13.0 | -44.8 | |
| 3326.00 | -22.9 | H | 3.0 | 36.1 | 1.0 | -58.1 | -13.0 | -45.1 | |
| High Ch, 844 | | | | | | | | | |
| 1688.00 | -28.5 | V | 3.0 | 37.0 | 1.0 | -64.5 | -13.0 | -51.5 | |
| 2532.00 | -23.3 | V | 3.0 | 36.4 | 1.0 | -58.7 | -13.0 | -45.7 | |
| 3376.00 | -22.2 | V | 3.0 | 36.1 | 1.0 | -57.2 | -13.0 | -44.2 | |
| 1688.00 | -27.7 | H | 3.0 | 37.0 | 1.0 | -63.7 | -13.0 | -50.7 | |
| 2532.00 | -23.6 | H | 3.0 | 36.4 | 1.0 | -59.0 | -13.0 | -46.0 | |
| 3376.00 | -22.5 | H | 3.0 | 36.1 | 1.0 | -57.5 | -13.0 | -44.5 | |



UL VERFICATION SERVICES FORM ID: FCC_22_24_27_90
47173 BENICIA STREET, FREMONT, CA 94538, USA TEL: (510) 771-1000 FAX: (510) 661-0888

*This report shall not be reproduced except in full, without the written approval of UL Verification Services Inc.*

Band

LTE26

5MHz

16QAM

**UL Verification Services, Inc.**
**Above 1GHz High Frequency Substitution Measurement**

**Company:** LG Electronics
**Project #:** 15I20514
**Date:** 4/27/2015
**Test Engineer:** D. Mun
**Configuration:** EUT/ AC Charger/ Headset
**Location:** Chamber F
**Mode:** LTE_16QAM Band 26 Harmonics, 5MHz Bandwidth

| f MHz | SG reading (dBm) | Ant. Pol. (H/V) | Distance (m) | Preamp (dB) | Filter (dB) | EIRP (dBm) | Limit (dBm) | Delta (dB) | Notes |
|---|---|---|---|---|---|---|---|---|---|
| Low Ch, 816.5 | | | | | | | | | |
| 1633.00 | -27.4 | V | 3.0 | 37.0 | 1.0 | -63.4 | -13.0 | -50.4 | |
| 2449.50 | -22.1 | V | 3.0 | 36.4 | 1.0 | -57.6 | -13.0 | -44.6 | |
| 3266.00 | -21.8 | V | 3.0 | 36.2 | 1.0 | -57.0 | -13.0 | -44.0 | |
| 1633.00 | -27.1 | H | 3.0 | 37.0 | 1.0 | -63.2 | -13.0 | -50.2 | |
| 2449.50 | -22.8 | H | 3.0 | 36.4 | 1.0 | -58.2 | -13.0 | -45.2 | |
| 3266.00 | -21.6 | H | 3.0 | 36.2 | 1.0 | -56.8 | -13.0 | -43.8 | |
| Mid Ch, 831.5 | | | | | | | | | |
| 1663.00 | -27.0 | V | 3.0 | 37.0 | 1.0 | -63.0 | -13.0 | -50.0 | |
| 2494.50 | -20.5 | V | 3.0 | 36.4 | 1.0 | -55.9 | -13.0 | -42.9 | |
| 3326.00 | -22.0 | V | 3.0 | 36.1 | 1.0 | -57.1 | -13.0 | -44.1 | |
| 1663.00 | -27.4 | H | 3.0 | 37.0 | 1.0 | -63.4 | -13.0 | -50.4 | |
| 2494.50 | -22.3 | H | 3.0 | 36.4 | 1.0 | -57.7 | -13.0 | -44.7 | |
| 3326.00 | -21.8 | H | 3.0 | 36.1 | 1.0 | -56.9 | -13.0 | -43.9 | |
| High Ch, 846.5 | | | | | | | | | |
| 1693.00 | -26.4 | V | 3.0 | 37.0 | 1.0 | -62.3 | -13.0 | -49.3 | |
| 2539.50 | -20.6 | V | 3.0 | 36.4 | 1.0 | -56.0 | -13.0 | -43.0 | |
| 3386.00 | -20.8 | V | 3.0 | 36.1 | 1.0 | -55.9 | -13.0 | -42.9 | |
| 1693.00 | -26.9 | H | 3.0 | 37.0 | 1.0 | -62.9 | -13.0 | -49.9 | |
| 2539.50 | -21.9 | H | 3.0 | 36.4 | 1.0 | -57.3 | -13.0 | -44.3 | |
| 3386.00 | -21.8 | H | 3.0 | 36.1 | 1.0 | -56.9 | -13.0 | -43.9 | |



UL VERFICATION SERVICES FORM ID: FCC_22_24_27_90
47173 BENICIA STREET, FREMONT, CA 94538, USA TEL: (510) 771-1000 FAX: (510) 661-0888

*This report shall not be reproduced except in full, without the written approval of UL Verification Services Inc.*

**UL Verification Services, Inc.**
**Above 1GHz High Frequency Substitution Measurement**

**Company:** LG Electronics
**Project #:** 15I20514
**Date:** 4/27/2015
**Test Engineer:** D. Mun
**Configuration:** EUT/ AC Charger/ Headset
**Location:** Chamber F
**Mode:** LTE_QPSK Band 26 Harmonics, 5MHz Bandwidth

Band LTE26 5MHz QPSK

| f MHz | SG reading (dBm) | Ant. Pol. (H/V) | Distance (m) | Preamp (dB) | Filter (dB) | EIRP (dBm) | Limit (dBm) | Delta (dB) | Notes |
|---|---|---|---|---|---|---|---|---|---|
| Low Ch, 816.5 | | | | | | | | | |
| 1633.00 | -27.0 | V | 3.0 | 37.0 | 1.0 | -63.0 | -13.0 | -50.0 | |
| 2449.50 | -21.3 | V | 3.0 | 36.4 | 1.0 | -56.8 | -13.0 | -43.8 | |
| 3266.00 | -22.4 | V | 3.0 | 36.2 | 1.0 | -57.5 | -13.0 | -44.5 | |
| 1633.00 | -27.2 | H | 3.0 | 37.0 | 1.0 | -63.3 | -13.0 | -50.3 | |
| 2449.50 | -23.0 | H | 3.0 | 36.4 | 1.0 | -58.5 | -13.0 | -45.5 | |
| 3266.00 | -22.0 | H | 3.0 | 36.2 | 1.0 | -57.2 | -13.0 | -44.2 | |
| Mid Ch, 831.5 | | | | | | | | | |
| 1663.00 | -27.1 | V | 3.0 | 37.0 | 1.0 | -63.1 | -13.0 | -50.1 | |
| 2494.50 | -20.9 | V | 3.0 | 36.4 | 1.0 | -56.3 | -13.0 | -43.3 | |
| 3326.00 | -22.0 | V | 3.0 | 36.1 | 1.0 | -57.1 | -13.0 | -44.1 | |
| 1663.00 | -27.4 | H | 3.0 | 37.0 | 1.0 | -63.4 | -13.0 | -50.4 | |
| 2494.50 | -22.7 | H | 3.0 | 36.4 | 1.0 | -58.1 | -13.0 | -45.1 | |
| 3326.00 | -21.8 | H | 3.0 | 36.1 | 1.0 | -56.9 | -13.0 | -43.9 | |
| High Ch, 846.5 | | | | | | | | | |
| 1693.00 | -26.5 | V | 3.0 | 37.0 | 1.0 | -62.5 | -13.0 | -49.5 | |
| 2539.50 | -21.1 | V | 3.0 | 36.4 | 1.0 | -56.5 | -13.0 | -43.5 | |
| 3386.00 | -21.1 | V | 3.0 | 36.1 | 1.0 | -56.2 | -13.0 | -43.2 | |
| 1693.00 | -26.9 | H | 3.0 | 37.0 | 1.0 | -62.9 | -13.0 | -49.9 | |
| 2539.50 | -21.9 | H | 3.0 | 36.4 | 1.0 | -57.3 | -13.0 | -44.3 | |
| 3386.00 | -21.3 | H | 3.0 | 36.1 | 1.0 | -56.4 | -13.0 | -43.4 | |


UL VERFICATION SERVICES FORM ID: FCC_22_24_27_90
47173 BENICIA STREET, FREMONT, CA 94538, USA TEL: (510) 771-1000 FAX: (510) 661-0888
*This report shall not be reproduced except in full, without the written approval of UL Verification Services Inc.*

Band

LTE26

3MHz

16QAM

**UL Verification Services, Inc.**
**Above 1GHz High Frequency Substitution Measurement**

**Company:** LG Electronics
**Project #:** 15I20514
**Date:** 4/27/2015
**Test Engineer:** D. Mun
**Configuration:** EUT/ AC Charger/ Headset
**Location:** Chamber F
**Mode:** LTE_16QAM Band 26 Harmonics, 3MHz Bandwidth

| f MHz | SG reading (dBm) | Ant. Pol. (H/V) | Distance (m) | Preamp (dB) | Filter (dB) | EIRP (dBm) | Limit (dBm) | Delta (dB) | Notes |
|---|---|---|---|---|---|---|---|---|---|
| Low Ch, 815.5 | | | | | | | | | |
| 1631.00 | -27.0 | V | 3.0 | 37.0 | 1.0 | -63.0 | -13.0 | -50.0 | |
| 2446.50 | -22.9 | V | 3.0 | 36.4 | 1.0 | -58.3 | -13.0 | -45.3 | |
| 3262.00 | -22.1 | V | 3.0 | 36.2 | 1.0 | -57.2 | -13.0 | -44.2 | |
| 1631.00 | -27.2 | H | 3.0 | 37.0 | 1.0 | -63.2 | -13.0 | -50.2 | |
| 2446.50 | -22.8 | H | 3.0 | 36.4 | 1.0 | -58.2 | -13.0 | -45.2 | |
| 3262.00 | -21.0 | H | 3.0 | 36.2 | 1.0 | -56.2 | -13.0 | -43.2 | |
| Mid Ch, 831.5 | | | | | | | | | |
| 1663.00 | -27.0 | V | 3.0 | 37.0 | 1.0 | -63.0 | -13.0 | -50.0 | |
| 2494.50 | -20.6 | V | 3.0 | 36.4 | 1.0 | -56.0 | -13.0 | -43.0 | |
| 3326.00 | -22.0 | V | 3.0 | 36.1 | 1.0 | -57.1 | -13.0 | -44.1 | |
| 1663.00 | -27.5 | H | 3.0 | 37.0 | 1.0 | -63.6 | -13.0 | -50.6 | |
| 2494.50 | -22.9 | H | 3.0 | 36.4 | 1.0 | -58.3 | -13.0 | -45.3 | |
| 3326.00 | -22.4 | H | 3.0 | 36.1 | 1.0 | -57.5 | -13.0 | -44.5 | |
| High Ch, 847.5 | | | | | | | | | |
| 1695.00 | -26.3 | V | 3.0 | 37.0 | 1.0 | -62.2 | -13.0 | -49.2 | |
| 2542.50 | -21.1 | V | 3.0 | 36.4 | 1.0 | -56.5 | -13.0 | -43.5 | |
| 3390.00 | -21.4 | V | 3.0 | 36.1 | 1.0 | -56.5 | -13.0 | -43.5 | |
| 1695.00 | -27.1 | H | 3.0 | 37.0 | 1.0 | -63.1 | -13.0 | -50.1 | |
| 2542.50 | -22.4 | H | 3.0 | 36.4 | 1.0 | -57.9 | -13.0 | -44.9 | |
| 3390.00 | -21.7 | H | 3.0 | 36.1 | 1.0 | -56.8 | -13.0 | -43.8 | |


UL VERFICATION SERVICES FORM ID: FCC_22_24_27_90
47173 BENICIA STREET, FREMONT, CA 94538, USA TEL: (510) 771-1000 FAX: (510) 661-0888
*This report shall not be reproduced except in full, without the written approval of UL Verification Services Inc.*

Band

LTE26

3MHz

QPSK

**UL Verification Services, Inc.**
**Above 1GHz High Frequency Substitution Measurement**

**Company:** LG Electronics
**Project #:** 15I20514
**Date:** 4/27/2015
**Test Engineer:** D. Mun
**Configuration:** EUT/ AC Charger/ Headset
**Location:** Chamber F
**Mode:** LTE_QPSK Band 26 Harmonics, 3MHz Bandwidth

| f MHz | SG reading (dBm) | Ant. Pol. (H/V) | Distance (m) | Preamp (dB) | Filter (dB) | EIRP (dBm) | Limit (dBm) | Delta (dB) | Notes |
|---|---|---|---|---|---|---|---|---|---|
| Low Ch, 815.5 | | | | | | | | | |
| 1631.00 | -26.5 | V | 3.0 | 37.0 | 1.0 | -62.5 | -13.0 | -49.5 | |
| 2446.50 | -21.5 | V | 3.0 | 36.4 | 1.0 | -56.9 | -13.0 | -43.9 | |
| 3262.00 | -21.7 | V | 3.0 | 36.2 | 1.0 | -56.9 | -13.0 | -43.9 | |
| 1631.00 | -27.8 | H | 3.0 | 37.0 | 1.0 | -63.8 | -13.0 | -50.8 | |
| 2446.50 | -23.3 | H | 3.0 | 36.4 | 1.0 | -58.7 | -13.0 | -45.7 | |
| 3262.00 | -22.0 | H | 3.0 | 36.2 | 1.0 | -57.2 | -13.0 | -44.2 | |
| Mid Ch, 831.5 | | | | | | | | | |
| 1663.00 | -26.4 | V | 3.0 | 37.0 | 1.0 | -62.4 | -13.0 | -49.4 | |
| 2494.50 | -20.7 | V | 3.0 | 36.4 | 1.0 | -56.1 | -13.0 | -43.1 | |
| 3326.00 | -20.6 | V | 3.0 | 36.1 | 1.0 | -55.7 | -13.0 | -42.7 | |
| 1663.00 | -27.0 | H | 3.0 | 37.0 | 1.0 | -63.0 | -13.0 | -50.0 | |
| 2494.50 | -22.2 | H | 3.0 | 36.4 | 1.0 | -57.6 | -13.0 | -44.6 | |
| 3326.00 | -21.9 | H | 3.0 | 36.1 | 1.0 | -57.0 | -13.0 | -44.0 | |
| High Ch, 847.5 | | | | | | | | | |
| 1695.00 | -26.7 | V | 3.0 | 37.0 | 1.0 | -62.6 | -13.0 | -49.6 | |
| 2542.50 | -20.8 | V | 3.0 | 36.4 | 1.0 | -56.2 | -13.0 | -43.2 | |
| 3390.00 | -20.8 | V | 3.0 | 36.1 | 1.0 | -55.9 | -13.0 | -42.9 | |
| 1695.00 | -26.4 | H | 3.0 | 37.0 | 1.0 | -62.4 | -13.0 | -49.4 | |
| 2542.50 | -22.0 | H | 3.0 | 36.4 | 1.0 | -57.5 | -13.0 | -44.5 | |
| 3390.00 | -20.5 | H | 3.0 | 36.1 | 1.0 | -55.6 | -13.0 | -42.6 | |



UL VERFICATION SERVICES FORM ID: FCC_22_24_27_90
47173 BENICIA STREET, FREMONT, CA 94538, USA TEL: (510) 771-1000 FAX: (510) 661-0888

*This report shall not be reproduced except in full, without the written approval of UL Verification Services Inc.*

Band

LTE26

1.4MHz

16QAM

**UL Verification Services, Inc.**
**Above 1GHz High Frequency Substitution Measurement**

**Company:** LG Electronics
**Project #:** 15I20514
**Date:** 4/27/2015
**Test Engineer:** D. Mun
**Configuration:** EUT/ AC Charger/ Headset
**Location:** Chamber F
**Mode:** LTE_16QAM Band 26 Harmonics, 1.4MHz Bandwidth

| f MHz | SG reading (dBm) | Ant. Pol. (H/V) | Distance (m) | Preamp (dB) | Filter (dB) | EIRP (dBm) | Limit (dBm) | Delta (dB) | Notes |
|---|---|---|---|---|---|---|---|---|---|
| Low Ch, 814.7 | | | | | | | | | |
| 1629.40 | -27.1 | V | 3.0 | 37.1 | 1.0 | -63.2 | -13.0 | -50.2 | |
| 2444.10 | -20.9 | V | 3.0 | 36.4 | 1.0 | -56.3 | -13.0 | -43.3 | |
| 3258.80 | -21.2 | V | 3.0 | 36.2 | 1.0 | -56.4 | -13.0 | -43.4 | |
| 1629.40 | -27.6 | H | 3.0 | 37.1 | 1.0 | -63.7 | -13.0 | -50.7 | |
| 2444.10 | -22.1 | H | 3.0 | 36.4 | 1.0 | -57.5 | -13.0 | -44.5 | |
| 3258.80 | -22.5 | H | 3.0 | 36.2 | 1.0 | -57.7 | -13.0 | -44.7 | |
| Mid Ch, 831.5 | | | | | | | | | |
| 1663.00 | -26.5 | V | 3.0 | 37.0 | 1.0 | -62.5 | -13.0 | -49.5 | |
| 2494.50 | -20.9 | V | 3.0 | 36.4 | 1.0 | -56.3 | -13.0 | -43.3 | |
| 3326.00 | -22.3 | V | 3.0 | 36.1 | 1.0 | -57.4 | -13.0 | -44.4 | |
| 1663.00 | -27.4 | H | 3.0 | 37.0 | 1.0 | -63.4 | -13.0 | -50.4 | |
| 2494.50 | -23.8 | H | 3.0 | 36.4 | 1.0 | -59.2 | -13.0 | -46.2 | |
| 3326.00 | -23.4 | H | 3.0 | 36.1 | 1.0 | -58.5 | -13.0 | -45.5 | |
| High Ch, 848.3 | | | | | | | | | |
| 1696.60 | -26.5 | V | 3.0 | 37.0 | 1.0 | -62.5 | -13.0 | -49.5 | |
| 2544.90 | -22.4 | V | 3.0 | 36.4 | 1.0 | -57.9 | -13.0 | -44.9 | |
| 3393.20 | -20.5 | V | 3.0 | 36.1 | 1.0 | -55.6 | -13.0 | -42.6 | |
| 1696.60 | -27.3 | H | 3.0 | 37.0 | 1.0 | -63.3 | -13.0 | -50.3 | |
| 2544.90 | -22.6 | H | 3.0 | 36.4 | 1.0 | -58.0 | -13.0 | -45.0 | |
| 3393.20 | -21.9 | H | 3.0 | 36.1 | 1.0 | -57.0 | -13.0 | -44.0 | |




*This report shall not be reproduced except in full, without the written approval of UL Verification Services Inc.*

**UL Verification Services, Inc.**
**Above 1GHz High Frequency Substitution Measurement**

**Company:** LG Electronics
**Project #:** 15I20514
**Date:** 4/27/2015
**Test Engineer:** D. Mun
**Configuration:** EUT/ AC Charger/ Headset
**Location:** Chamber F
**Mode:** LTE_QPSK Band 26 Harmonics, 1.4MHz Bandwidth

Band
LTE26
1.4MHz
QPSK

| f MHz | SG reading (dBm) | Ant. Pol. (H/V) | Distance (m) | Preamp (dB) | Filter (dB) | EIRP (dBm) | Limit (dBm) | Delta (dB) | Notes |
|---|---|---|---|---|---|---|---|---|---|
| Low Ch, 814.7 | | | | | | | | | |
| 1629.40 | -27.0 | V | 3.0 | 37.1 | 1.0 | -63.1 | -13.0 | -50.1 | |
| 2444.10 | -21.6 | V | 3.0 | 36.4 | 1.0 | -57.0 | -13.0 | -44.0 | |
| 3258.80 | -21.1 | V | 3.0 | 36.2 | 1.0 | -56.3 | -13.0 | -43.3 | |
| 1629.40 | -26.7 | H | 3.0 | 37.1 | 1.0 | -62.7 | -13.0 | -49.7 | |
| 2444.10 | -23.5 | H | 3.0 | 36.4 | 1.0 | -59.0 | -13.0 | -46.0 | |
| 3258.80 | -21.9 | H | 3.0 | 36.2 | 1.0 | -57.1 | -13.0 | -44.1 | |
| Mid Ch, 831.5 | | | | | | | | | |
| 1663.00 | -27.4 | V | 3.0 | 37.0 | 1.0 | -63.4 | -13.0 | -50.4 | |
| 2494.50 | -25.1 | V | 3.0 | 36.4 | 1.0 | -60.6 | -13.0 | -47.6 | |
| 3326.00 | -21.3 | V | 3.0 | 36.1 | 1.0 | -56.4 | -13.0 | -43.4 | |
| 1663.00 | -26.1 | H | 3.0 | 37.0 | 1.0 | -62.1 | -13.0 | -49.1 | |
| 2494.50 | -23.0 | H | 3.0 | 36.4 | 1.0 | -58.4 | -13.0 | -45.4 | |
| 3326.00 | -20.9 | H | 3.0 | 36.1 | 1.0 | -56.0 | -13.0 | -43.0 | |
| High Ch, 848.3 | | | | | | | | | |
| 1696.60 | -25.4 | V | 3.0 | 37.0 | 1.0 | -61.4 | -13.0 | -48.4 | |
| 2544.90 | -22.3 | V | 3.0 | 36.4 | 1.0 | -57.7 | -13.0 | -44.7 | |
| 3393.20 | -21.5 | V | 3.0 | 36.1 | 1.0 | -56.6 | -13.0 | -43.6 | |
| 1696.60 | -26.7 | H | 3.0 | 37.0 | 1.0 | -62.7 | -13.0 | -49.7 | |
| 2544.90 | -21.8 | H | 3.0 | 36.4 | 1.0 | -57.2 | -13.0 | -44.2 | |
| 3393.20 | -22.0 | H | 3.0 | 36.1 | 1.0 | -57.1 | -13.0 | -44.1 | |


UL VERFICATION SERVICES FORM ID: FCC_22_24_27_90
47173 BENICIA STREET, FREMONT, CA 94538, USA TEL: (510) 771-1000 FAX: (510) 661-0888
*This report shall not be reproduced except in full, without the written approval of UL Verification Services Inc.*

**LTE Band 41**

**UL Verification Services, Inc.**
**Above 1GHz High Frequency Substitution Measurement**

**Company:** LG
**Project #:** 15I20514
**Date:** 4/7/2015
**Test Engineer:** Jude Semana
**Configuration:** EUT , AC Adapter and Headset
**Location:** Chamber G
**Mode:** LTE_16QAM Band 41 Harmonics, 20MHz Bandwidth

Band

LTE41

20MHz

16QAM

| f MHz | SG reading (dBm) | Ant. Pol. (H/V) | Distance (m) | Preamp (dB) | Filter (dB) | EIRP (dBm) | Limit (dBm) | Delta (dB) | Notes |
|---|---|---|---|---|---|---|---|---|---|
| Low Ch, 2506 | | | | | | | | | |
| 5012.00 | -18.3 | V | 3.0 | 35.5 | 1.0 | -52.8 | -25.0 | -27.8 | |
| 7518.00 | -14.3 | V | 3.0 | 35.7 | 1.0 | -49.0 | -25.0 | -24.0 | |
| 10024.00 | -11.7 | V | 3.0 | 36.0 | 1.0 | -46.7 | -25.0 | -21.7 | |
| 5012.00 | -17.7 | H | 3.0 | 35.5 | 1.0 | -52.2 | -25.0 | -27.2 | |
| 7518.00 | -13.8 | H | 3.0 | 35.7 | 1.0 | -48.6 | -25.0 | -23.6 | |
| 10024.00 | -11.0 | H | 3.0 | 36.0 | 1.0 | -46.0 | -25.0 | -21.0 | |
| Mid Ch, 2593 | | | | | | | | | |
| 5186.00 | -17.5 | V | 3.0 | 35.4 | 1.0 | -51.9 | -25.0 | -26.9 | |
| 7779.00 | -12.4 | V | 3.0 | 35.8 | 1.0 | -47.2 | -25.0 | -22.2 | |
| 10372.00 | -13.6 | V | 3.0 | 35.8 | 1.0 | -48.4 | -25.0 | -23.4 | |
| 5186.00 | -16.3 | H | 3.0 | 35.4 | 1.0 | -50.7 | -25.0 | -25.7 | |
| 7779.00 | -11.4 | H | 3.0 | 35.8 | 1.0 | -46.2 | -25.0 | -21.2 | |
| 10372.00 | -13.2 | H | 3.0 | 35.8 | 1.0 | -48.0 | -25.0 | -23.0 | |
| High Ch, 2680 | | | | | | | | | |
| 5360.00 | -14.2 | V | 3.0 | 35.4 | 1.0 | -48.7 | -25.0 | -23.7 | |
| 8040.00 | -14.2 | V | 3.0 | 35.8 | 1.0 | -49.0 | -25.0 | -24.0 | |
| 10720.00 | -12.3 | V | 3.0 | 35.7 | 1.0 | -47.0 | -25.0 | -22.0 | |
| 5360.00 | -13.8 | H | 3.0 | 35.4 | 1.0 | -48.3 | -25.0 | -23.3 | |
| 8040.00 | -13.4 | H | 3.0 | 35.8 | 1.0 | -48.2 | -25.0 | -23.2 | |
| 10720.00 | -12.2 | H | 3.0 | 35.7 | 1.0 | -46.9 | -25.0 | -21.9 | |




*This report shall not be reproduced except in full, without the written approval of UL Verification Services Inc.*

Band

LTE41

20MHz

QPSK

## UL Verification Services, Inc.
## Above 1GHz High Frequency Substitution Measurement

**Company:** LG
**Project #:** 15I20514
**Date:** 4/7/2015
**Test Engineer:** Jude Semana
**Configuration:** EUT , AC Adapter and Headset
**Location:** Chamber G
**Mode:** LTE_QPSK Band 41 Harmonics, 20MHz Bandwidth

| f MHz | SG reading (dBm) | Ant. Pol. (H/V) | Distance (m) | Preamp (dB) | Filter (dB) | EIRP (dBm) | Limit (dBm) | Delta (dB) | Notes |
|---|---|---|---|---|---|---|---|---|---|
| Low Ch, 2506 | | | | | | | | | |
| 5012.00 | -17.0 | V | 3.0 | 35.5 | 1.0 | -51.5 | -25.0 | -26.5 | |
| 7518.00 | -14.6 | V | 3.0 | 35.7 | 1.0 | -49.3 | -25.0 | -24.3 | |
| 10024.00 | -11.7 | V | 3.0 | 36.0 | 1.0 | -46.7 | -25.0 | -21.7 | |
| 5012.00 | -18.0 | H | 3.0 | 35.5 | 1.0 | -52.5 | -25.0 | -27.5 | |
| 7518.00 | -14.2 | H | 3.0 | 35.7 | 1.0 | -48.9 | -25.0 | -23.9 | |
| 10024.00 | -10.9 | H | 3.0 | 36.0 | 1.0 | -45.9 | -25.0 | -20.9 | |
| Mid Ch, 2593 | | | | | | | | | |
| 5186.00 | -17.6 | V | 3.0 | 35.4 | 1.0 | -52.1 | -25.0 | -27.1 | |
| 7779.00 | -12.0 | V | 3.0 | 35.8 | 1.0 | -46.7 | -25.0 | -21.7 | |
| 10372.00 | -13.4 | V | 3.0 | 35.8 | 1.0 | -48.2 | -25.0 | -23.2 | |
| 5186.00 | -16.6 | H | 3.0 | 35.4 | 1.0 | -51.0 | -25.0 | -26.0 | |
| 7779.00 | -11.5 | H | 3.0 | 35.8 | 1.0 | -46.2 | -25.0 | -21.2 | |
| 10372.00 | -13.0 | H | 3.0 | 35.8 | 1.0 | -47.9 | -25.0 | -22.9 | |
| High Ch, 2680 | | | | | | | | | |
| 5360.00 | -13.3 | V | 3.0 | 35.4 | 1.0 | -47.8 | -25.0 | -22.8 | |
| 8040.00 | -14.3 | V | 3.0 | 35.8 | 1.0 | -49.1 | -25.0 | -24.1 | |
| 10720.00 | -12.2 | V | 3.0 | 35.7 | 1.0 | -46.9 | -25.0 | -21.9 | |
| 5360.00 | -13.9 | H | 3.0 | 35.4 | 1.0 | -48.3 | -25.0 | -23.3 | |
| 8040.00 | -13.6 | H | 3.0 | 35.8 | 1.0 | -48.4 | -25.0 | -23.4 | |
| 10720.00 | -12.2 | H | 3.0 | 35.7 | 1.0 | -46.9 | -25.0 | -21.9 | |



UL VERFICATION SERVICES FORM ID: FCC_22_24_27_90
47173 BENICIA STREET, FREMONT, CA 94538, USA TEL: (510) 771-1000 FAX: (510) 661-0888

*This report shall not be reproduced except in full, without the written approval of UL Verification Services Inc.*

## UL Verification Services, Inc.
## Above 1GHz High Frequency Substitution Measurement

**Company:** LG
**Project #:** 15I20514
**Date:** 4/7/2015
**Test Engineer:** Jude Semana
**Configuration:** EUT , AC Adapter and Headset
**Location:** Chamber G
**Mode:** LTE_16QAM Band 41 Harmonics, 15MHz Bandwidth

Band
LTE41
15MHz
16QAM

| f MHz | SG reading (dBm) | Ant. Pol. (H/V) | Distance (m) | Preamp (dB) | Filter (dB) | EIRP (dBm) | Limit (dBm) | Delta (dB) | Notes |
|---|---|---|---|---|---|---|---|---|---|
| Low Ch, 2503.5 | | | | | | | | | |
| 5007.00 | -18.4 | V | 3.0 | 35.5 | 1.0 | -52.8 | -25.0 | -27.8 | |
| 7510.50 | -15.1 | V | 3.0 | 35.7 | 1.0 | -49.8 | -25.0 | -24.8 | |
| 10014.00 | -11.0 | V | 3.0 | 36.0 | 1.0 | -46.0 | -25.0 | -21.0 | |
| 5007.00 | -16.9 | H | 3.0 | 35.5 | 1.0 | -51.4 | -25.0 | -26.4 | |
| 7510.50 | -14.0 | H | 3.0 | 35.7 | 1.0 | -48.7 | -25.0 | -23.7 | |
| 10014.00 | -10.7 | H | 3.0 | 36.0 | 1.0 | -45.8 | -25.0 | -20.8 | |
| Mid Ch, 2593 | | | | | | | | | |
| 5186.00 | -17.2 | V | 3.0 | 35.4 | 1.0 | -51.6 | -25.0 | -26.6 | |
| 7779.00 | -11.6 | V | 3.0 | 35.8 | 1.0 | -46.4 | -25.0 | -21.4 | |
| 10372.00 | -13.4 | V | 3.0 | 35.8 | 1.0 | -48.2 | -25.0 | -23.2 | |
| 5186.00 | -17.1 | H | 3.0 | 35.4 | 1.0 | -51.5 | -25.0 | -26.5 | |
| 7779.00 | -11.0 | H | 3.0 | 35.8 | 1.0 | -45.8 | -25.0 | -20.8 | |
| 10372.00 | -13.2 | H | 3.0 | 35.8 | 1.0 | -48.1 | -25.0 | -23.1 | |
| High Ch, 2682.5 | | | | | | | | | |
| 5365.00 | -13.7 | V | 3.0 | 35.4 | 1.0 | -48.2 | -25.0 | -23.2 | |
| 8047.50 | -14.6 | V | 3.0 | 35.8 | 1.0 | -49.4 | -25.0 | -24.4 | |
| 10730.00 | -12.2 | V | 3.0 | 35.7 | 1.0 | -46.9 | -25.0 | -21.9 | |
| 5365.00 | -13.0 | H | 3.0 | 35.4 | 1.0 | -47.5 | -25.0 | -22.5 | |
| 8047.50 | -13.6 | H | 3.0 | 35.8 | 1.0 | -48.4 | -25.0 | -23.4 | |
| 10730.00 | -12.1 | H | 3.0 | 35.7 | 1.0 | -46.8 | -25.0 | -21.8 | |


*This report shall not be reproduced except in full, without the written approval of UL Verification Services Inc.*

## UL Verification Services, Inc.
## Above 1GHz High Frequency Substitution Measurement

**Company:** LG
**Project #:** 15I20514
**Date:** 4/7/2015
**Test Engineer:** Jude Semana
**Configuration:** EUT , AC Adapter and Headset
**Location:** Chamber G
**Mode:** LTE_QPSK Band 41 Harmonics, 15MHz Bandwidth

Band
LTE41
15MHz
QPSK

| f MHz | SG reading (dBm) | Ant. Pol. (H/V) | Distance (m) | Preamp (dB) | Filter (dB) | EIRP (dBm) | Limit (dBm) | Delta (dB) | Notes |
|---|---|---|---|---|---|---|---|---|---|
| Low Ch, 2503.5 | | | | | | | | | |
| 5007.00 | -18.3 | V | 3.0 | 35.5 | 1.0 | -52.7 | -25.0 | -27.7 | |
| 7510.50 | -15.8 | V | 3.0 | 35.7 | 1.0 | -50.5 | -25.0 | -25.5 | |
| 10014.00 | -11.6 | V | 3.0 | 36.0 | 1.0 | -46.6 | -25.0 | -21.6 | |
| 5007.00 | -18.5 | H | 3.0 | 35.5 | 1.0 | -53.0 | -25.0 | -28.0 | |
| 7510.50 | -13.1 | H | 3.0 | 35.7 | 1.0 | -47.8 | -25.0 | -22.8 | |
| 10014.00 | -11.2 | H | 3.0 | 36.0 | 1.0 | -46.3 | -25.0 | -21.3 | |
| Mid Ch, 2593 | | | | | | | | | |
| 5186.00 | -17.2 | V | 3.0 | 35.4 | 1.0 | -51.7 | -25.0 | -26.7 | |
| 7779.00 | -11.7 | V | 3.0 | 35.8 | 1.0 | -46.5 | -25.0 | -21.5 | |
| 10372.00 | -13.8 | V | 3.0 | 35.8 | 1.0 | -48.6 | -25.0 | -23.6 | |
| 5186.00 | -16.2 | H | 3.0 | 35.4 | 1.0 | -50.6 | -25.0 | -25.6 | |
| 7779.00 | -11.1 | H | 3.0 | 35.8 | 1.0 | -45.9 | -25.0 | -20.9 | |
| 10372.00 | -13.2 | H | 3.0 | 35.8 | 1.0 | -48.0 | -25.0 | -23.0 | |
| High Ch, 2682.5 | | | | | | | | | |
| 5365.00 | -13.8 | V | 3.0 | 35.4 | 1.0 | -48.2 | -25.0 | -23.2 | |
| 8047.50 | -14.3 | V | 3.0 | 35.8 | 1.0 | -49.1 | -25.0 | -24.1 | |
| 10730.00 | -12.5 | V | 3.0 | 35.7 | 1.0 | -47.2 | -25.0 | -22.2 | |
| 5365.00 | -13.0 | H | 3.0 | 35.4 | 1.0 | -47.5 | -25.0 | -22.5 | |
| 8047.50 | -13.2 | H | 3.0 | 35.8 | 1.0 | -48.0 | -25.0 | -23.0 | |
| 10730.00 | -11.9 | H | 3.0 | 35.7 | 1.0 | -46.6 | -25.0 | -21.6 | |


UL VERFICATION SERVICES FORM ID: FCC_22_24_27_90
47173 BENICIA STREET, FREMONT, CA 94538, USA TEL: (510) 771-1000 FAX: (510) 661-0888
*This report shall not be reproduced except in full, without the written approval of UL Verification Services Inc.*

## UL Verification Services, Inc.
## Above 1GHz High Frequency Substitution Measurement

**Company:** LG
**Project #:** 15I20514
**Date:** 4/7/2015
**Test Engineer:** Jude Semana
**Configuration:** EUT , AC Adapter and Headset
**Location:** Chamber G
**Mode:** LTE_16QAM Band 41 Harmonics, 10MHz Bandwidth

Band
LTE41
10MHz
16QAM

| f MHz | SG reading (dBm) | Ant. Pol. (H/V) | Distance (m) | Preamp (dB) | Filter (dB) | EIRP (dBm) | Limit (dBm) | Delta (dB) | Notes |
|---|---|---|---|---|---|---|---|---|---|
| Low Ch, 2501 | | | | | | | | | |
| 5002.00 | -17.3 | V | 3.0 | 35.5 | 1.0 | -51.8 | -25.0 | -26.8 | |
| 7503.00 | -14.9 | V | 3.0 | 35.7 | 1.0 | -49.6 | -25.0 | -24.6 | |
| 10004.00 | -12.1 | V | 3.0 | 36.0 | 1.0 | -47.1 | -25.0 | -22.1 | |
| 5002.00 | -17.3 | H | 3.0 | 35.5 | 1.0 | -51.8 | -25.0 | -26.8 | |
| 7503.00 | -14.2 | H | 3.0 | 35.7 | 1.0 | -49.0 | -25.0 | -24.0 | |
| 10004.00 | -11.1 | H | 3.0 | 36.0 | 1.0 | -46.1 | -25.0 | -21.1 | |
| Mid Ch, 2593 | | | | | | | | | |
| 5186.00 | -17.2 | V | 3.0 | 35.4 | 1.0 | -51.6 | -25.0 | -26.6 | |
| 7779.00 | -12.1 | V | 3.0 | 35.8 | 1.0 | -46.9 | -25.0 | -21.9 | |
| 10372.00 | -14.1 | V | 3.0 | 35.8 | 1.0 | -49.0 | -25.0 | -24.0 | |
| 5186.00 | -16.5 | H | 3.0 | 35.4 | 1.0 | -51.0 | -25.0 | -26.0 | |
| 7779.00 | -10.8 | H | 3.0 | 35.8 | 1.0 | -45.6 | -25.0 | -20.6 | |
| 10372.00 | -13.0 | H | 3.0 | 35.8 | 1.0 | -47.9 | -25.0 | -22.9 | |
| High Ch, 2685 | | | | | | | | | |
| 5370.00 | -13.6 | V | 3.0 | 35.4 | 1.0 | -48.0 | -25.0 | -23.0 | |
| 8055.00 | -14.6 | V | 3.0 | 35.8 | 1.0 | -49.4 | -25.0 | -24.4 | |
| 10740.00 | -12.0 | V | 3.0 | 35.7 | 1.0 | -46.7 | -25.0 | -21.7 | |
| 5370.00 | -13.7 | H | 3.0 | 35.4 | 1.0 | -48.2 | -25.0 | -23.2 | |
| 8055.00 | -13.2 | H | 3.0 | 35.8 | 1.0 | -48.0 | -25.0 | -23.0 | |
| 10740.00 | -12.0 | H | 3.0 | 35.7 | 1.0 | -46.7 | -25.0 | -21.7 | |


*This report shall not be reproduced except in full, without the written approval of UL Verification Services Inc.*

## UL Verification Services, Inc.
## Above 1GHz High Frequency Substitution Measurement

**Company:** LG
**Project #:** 15I20514
**Date:** 4/7/2015
**Test Engineer:** Jude Semana
**Configuration:** EUT , AC Adapter and Headset
**Location:** Chamber G
**Mode:** LTE_QPSK Band 41 Harmonics, 10MHz Bandwidth

| Band | f MHz | SG reading (dBm) | Ant. Pol. (H/V) | Distance (m) | Preamp (dB) | Filter (dB) | EIRP (dBm) | Limit (dBm) | Delta (dB) | Notes |
|---|---|---|---|---|---|---|---|---|---|---|
| | Low Ch, 2501 | | | | | | | | | |
| LTE41 | 5002.00 | -17.0 | V | 3.0 | 35.5 | 1.0 | -51.5 | -25.0 | -26.5 | |
| | 7503.00 | -15.0 | V | 3.0 | 35.7 | 1.0 | -49.7 | -25.0 | -24.7 | |
| 10MHz | 10004.00 | -12.1 | V | 3.0 | 36.0 | 1.0 | -47.1 | -25.0 | -22.1 | |
| | 5002.00 | -18.3 | H | 3.0 | 35.5 | 1.0 | -52.8 | -25.0 | -27.8 | |
| QPSK | 7503.00 | -13.9 | H | 3.0 | 35.7 | 1.0 | -48.6 | -25.0 | -23.6 | |
| | 10004.00 | -11.8 | H | 3.0 | 36.0 | 1.0 | -46.8 | -25.0 | -21.8 | |
| | Mid Ch, 2593 | | | | | | | | | |
| | 5186.00 | -17.3 | V | 3.0 | 35.4 | 1.0 | -51.7 | -25.0 | -26.7 | |
| | 7779.00 | -12.4 | V | 3.0 | 35.8 | 1.0 | -47.2 | -25.0 | -22.2 | |
| | 10372.00 | -13.5 | V | 3.0 | 35.8 | 1.0 | -48.3 | -25.0 | -23.3 | |
| | 5186.00 | -16.5 | H | 3.0 | 35.4 | 1.0 | -51.0 | -25.0 | -26.0 | |
| | 7779.00 | -11.1 | H | 3.0 | 35.8 | 1.0 | -45.9 | -25.0 | -20.9 | |
| | 10372.00 | -13.4 | H | 3.0 | 35.8 | 1.0 | -48.2 | -25.0 | -23.2 | |
| | High Ch, 2685 | | | | | | | | | |
| | 5370.00 | -14.5 | V | 3.0 | 35.4 | 1.0 | -49.0 | -25.0 | -24.0 | |
| | 8055.00 | -13.6 | V | 3.0 | 35.8 | 1.0 | -48.4 | -25.0 | -23.4 | |
| | 10740.00 | -12.5 | V | 3.0 | 35.7 | 1.0 | -47.1 | -25.0 | -22.1 | |
| | 5370.00 | -13.2 | H | 3.0 | 35.4 | 1.0 | -47.6 | -25.0 | -22.6 | |
| | 8055.00 | -13.6 | H | 3.0 | 35.8 | 1.0 | -48.5 | -25.0 | -23.5 | |
| | 10740.00 | -11.9 | H | 3.0 | 35.7 | 1.0 | -46.6 | -25.0 | -21.6 | |


*This report shall not be reproduced except in full, without the written approval of UL Verification Services Inc.*

## UL Verification Services, Inc.
## Above 1GHz High Frequency Substitution Measurement

**Company:** LG
**Project #:** 15I20514
**Date:** 4/7/2015
**Test Engineer:** Jude Semana
**Configuration:** EUT , AC Adapter and Headset
**Location:** Chamber G
**Mode:** LTE_QPSK Band 41 Harmonics, 5MHz Bandwidth

Band
LTE41
5MHz
16QAM

| f MHz | SG reading (dBm) | Ant. Pol. (H/V) | Distance (m) | Preamp (dB) | Filter (dB) | EIRP (dBm) | Limit (dBm) | Delta (dB) | Notes |
|---|---|---|---|---|---|---|---|---|---|
| Low Ch, 2498.5 | | | | | | | | | |
| 4997.00 | -14.9 | V | 3.0 | 35.5 | 1.0 | -49.4 | -25.0 | -24.4 | |
| 7495.50 | -14.9 | V | 3.0 | 35.7 | 1.0 | -49.7 | -25.0 | -24.7 | |
| 9994.00 | -13.6 | V | 3.0 | 36.0 | 1.0 | -48.6 | -25.0 | -23.6 | |
| 4997.00 | -16.1 | H | 3.0 | 35.5 | 1.0 | -50.6 | -25.0 | -25.6 | |
| 7495.50 | -15.0 | H | 3.0 | 35.7 | 1.0 | -49.8 | -25.0 | -24.8 | |
| 9994.00 | -12.8 | H | 3.0 | 36.0 | 1.0 | -47.8 | -25.0 | -22.8 | |
| Mid Ch, 2593 | | | | | | | | | |
| 5186.00 | -15.2 | V | 3.0 | 35.4 | 1.0 | -49.6 | -25.0 | -24.6 | |
| 7779.00 | -14.4 | V | 3.0 | 35.8 | 1.0 | -49.2 | -25.0 | -24.2 | |
| 10372.00 | -12.3 | V | 3.0 | 35.8 | 1.0 | -47.2 | -25.0 | -22.2 | |
| 5186.00 | -13.9 | H | 3.0 | 35.4 | 1.0 | -48.4 | -25.0 | -23.4 | |
| 7779.00 | -13.0 | H | 3.0 | 35.8 | 1.0 | -47.7 | -25.0 | -22.7 | |
| 10372.00 | -13.6 | H | 3.0 | 35.8 | 1.0 | -48.5 | -25.0 | -23.5 | |
| High Ch, 2687.5 | | | | | | | | | |
| 5375.00 | -14.6 | V | 3.0 | 35.4 | 1.0 | -49.0 | -25.0 | -24.0 | |
| 8062.50 | -15.2 | V | 3.0 | 35.8 | 1.0 | -50.0 | -25.0 | -25.0 | |
| 10750.00 | -12.2 | V | 3.0 | 35.7 | 1.0 | -46.9 | -25.0 | -21.9 | |
| 5375.00 | -14.2 | H | 3.0 | 35.4 | 1.0 | -48.7 | -25.0 | -23.7 | |
| 8062.50 | -13.5 | H | 3.0 | 35.8 | 1.0 | -48.3 | -25.0 | -23.3 | |
| 10750.00 | -11.9 | H | 3.0 | 35.7 | 1.0 | -46.6 | -25.0 | -21.6 | |


*This report shall not be reproduced except in full, without the written approval of UL Verification Services Inc.*

## UL Verification Services, Inc.
## Above 1GHz High Frequency Substitution Measurement

**Company:** LG
**Project #:** 15I20514
**Date:** 4/7/2015
**Test Engineer:** Jude Semana
**Configuration:** EUT , AC Adapter and Headset
**Location:** Chamber G
**Mode:** LTE_QPSK Band 41 Harmonics, 5MHz Bandwidth

| Band | f MHz | SG reading (dBm) | Ant. Pol. (H/V) | Distance (m) | Preamp (dB) | Filter (dB) | EIRP (dBm) | Limit (dBm) | Delta (dB) | Notes |
|---|---|---|---|---|---|---|---|---|---|---|
| | Low Ch, 2498.5 | | | | | | | | | |
| LTE41 | 4997.00 | -14.9 | V | 3.0 | 35.5 | 1.0 | -49.4 | -25.0 | -24.4 | |
| | 7495.50 | -16.3 | V | 3.0 | 35.7 | 1.0 | -51.0 | -25.0 | -26.0 | |
| 5MHz | 9994.00 | -13.7 | V | 3.0 | 36.0 | 1.0 | -48.8 | -25.0 | -23.8 | |
| | 4997.00 | -16.1 | H | 3.0 | 35.5 | 1.0 | -50.6 | -25.0 | -25.6 | |
| QPSK | 7495.50 | -13.8 | H | 3.0 | 35.7 | 1.0 | -48.6 | -25.0 | -23.6 | |
| | 9994.00 | -12.2 | H | 3.0 | 36.0 | 1.0 | -47.2 | -25.0 | -22.2 | |
| | Mid Ch, 2593 | | | | | | | | | |
| | 5186.00 | -14.6 | V | 3.0 | 35.4 | 1.0 | -49.1 | -25.0 | -24.1 | |
| | 7779.00 | -14.5 | V | 3.0 | 35.8 | 1.0 | -49.2 | -25.0 | -24.2 | |
| | 10372.00 | -12.5 | V | 3.0 | 35.8 | 1.0 | -47.4 | -25.0 | -22.4 | |
| | 5186.00 | -12.2 | H | 3.0 | 35.4 | 1.0 | -46.6 | -25.0 | -21.6 | |
| | 7779.00 | -11.5 | H | 3.0 | 35.8 | 1.0 | -46.3 | -25.0 | -21.3 | |
| | 10372.00 | -11.9 | H | 3.0 | 35.8 | 1.0 | -46.8 | -25.0 | -21.8 | |
| | High Ch, 2687.5 | | | | | | | | | |
| | 5375.00 | -14.4 | V | 3.0 | 35.4 | 1.0 | -48.8 | -25.0 | -23.8 | |
| | 8062.50 | -15.1 | V | 3.0 | 35.8 | 1.0 | -49.9 | -25.0 | -24.9 | |
| | 10750.00 | -13.3 | V | 3.0 | 35.7 | 1.0 | -47.9 | -25.0 | -22.9 | |
| | 5375.00 | -12.9 | H | 3.0 | 35.4 | 1.0 | -47.4 | -25.0 | -22.4 | |
| | 8062.50 | -14.2 | H | 3.0 | 35.8 | 1.0 | -49.0 | -25.0 | -24.0 | |
| | 10750.00 | -11.8 | H | 3.0 | 35.7 | 1.0 | -46.5 | -25.0 | -21.5 | |


UL VERFICATION SERVICES FORM ID: FCC_22_24_27_90
47173 BENICIA STREET, FREMONT, CA 94538, USA TEL: (510) 771-1000 FAX: (510) 661-0888
*This report shall not be reproduced except in full, without the written approval of UL Verification Services Inc.*