PCTEST
7185 Oakland Mills Road, Columbia, MD 21046 USA
Tel. +1.410.290.6652 / Fax +1.410.290.6654
http://www.pctest.com

SAR EVALUATION REPORT

Applicant Name:
LG Electronics USA
1000 Sylvan Avenue
Englewood Cliffs, NJ 07632
United States

Date of Testing:
01/21/20 - 02/24/20
Test Site/Location:
PCTEST Lab, Columbia, MD, USA
Document Serial No.:
1M2001100004-01-R1.ZNF

FCC ID: **ZNFT600TS**

APPLICANT: **LG ELECTRONICS U.S.A, INC.**

DUT Type: Portable Tablet
Application Type: Certification
FCC Rule Part(s): CFR §2.1093
Model: LM-T600TS
Additional Models: LMT600TS, T600TS

Equipment Class	Band & Mode	Tx Frequency	SAR 1g Body (W/kg)
PCB	UMTS 850	826.40 - 846.60 MHz	0.88
PCB	UMTS 1750	1712.4 - 1752.6 MHz	0.85
PCB	UMTS 1900	1852.4 - 1907.6 MHz	1.21
PCB	LTE Band 71	665.5 - 695.5 MHz	0.93
PCB	LTE Band 12	699.7 - 715.3 MHz	0.71
PCB	LTE Band 13	779.5 - 784.5 MHz	0.82
PCB	LTE Band 26 (Cell)	814.7 - 848.3 MHz	0.82
PCB	LTE Band 5 (Cell)	824.7 - 848.3 MHz	N/A
PCB	LTE Band 66 (AWS)	1710.7 - 1779.3 MHz	1.04
PCB	LTE Band 4 (AWS)	1710.7 - 1754.3 MHz	N/A
PCB	LTE Band 25 (PCS)	1850.7 - 1914.3 MHz	1.28
PCB	LTE Band 2 (PCS)	1850.7 - 1909.3 MHz	N/A
PCB	LTE Band 41	2498.5 - 2687.5 MHz	1.30
DTS	2.4 GHz WLAN	2412 - 2462 MHz	0.43
NII	U-NII-1	5180 - 5240 MHz	N/A
NII	U-NII-2A	5260 - 5320 MHz	0.51
NII	U-NII-2C	5500 - 5720 MHz	0.66
NII	U-NII-3	5745 - 5825 MHz	0.64
DSS/DTS	Bluetooth	2402 - 2480 MHz	0.23
Simultaneous SAR per KDB 690783 D01v01r03:			1.59

Note: This revised Test Report (S/N: 1M2001100004-01-R1.ZNF) supersedes and replaces the previously issued test report on the same subject device for the same type of testing as indicated. Please discard or destroy the previously issued test report(s) and dispose of it accordingly.

This wireless portable device has been shown to be capable of compliance for localized specific absorption rate (SAR) for uncontrolled environment/general population exposure limits specified in ANSI/IEEE C95.1-1992 and has been tested in accordance with the measurement procedures specified in Section 1.7 of this report; for North American frequency bands only.

I attest to the accuracy of data. All measurements reported herein were performed by me or were made under my supervision and are correct to the best of my knowledge and belief. I assume full responsibility for the completeness of these measurements and vouch for the qualifications of all persons taking them. Test results reported herein relate only to the item(s) tested.

Randy Ortanez
President

The SAR Tick is an initiative of the Mobile & Wireless Forum (MWF). While a product may be considered eligible, use of the SAR Tick logo requires an agreement with the MWF. Further details can be obtained by emailing: sartick@mwfai.info.

© 2020 PCTEST All rights reserved. Unless otherwise specified, no part of this report may be reproduced or utilized in any part, form or by any means, electronic or mechanical, including photocopying and microfilm, without permission in writing from PCTEST. If you have any questions about this international copyright or have an enquiry about obtaining additional rights to this report or assembly of contents thereof, please contact INFO@PCTEST.COM.

TABLE OF CONTENTS

1 DEVICE UNDER TEST 3

2 LTE INFORMATION 11

3 INTRODUCTION 12

4 DOSIMETRIC ASSESSMENT 13

5 TEST CONFIGURATION POSITIONS 14

6 RF EXPOSURE LIMITS 15

7 FCC MEASUREMENT PROCEDURES 16

8 RF CONDUCTED POWERS 21

9 SYSTEM VERIFICATION 69

10 SAR DATA SUMMARY 72

11 FCC MULTI-TX AND ANTENNA SAR CONSIDERATIONS 83

12 SAR MEASUREMENT VARIABILITY 89

13 ADDITIONAL TESTING PER FCC GUIDANCE 90

14 EQUIPMENT LIST 91

15 MEASUREMENT UNCERTAINTIES 92

16 CONCLUSION 93

17 REFERENCES 94

APPENDIX A: SAR TEST PLOTS

APPENDIX B: SAR DIPOLE VERIFICATION PLOTS

APPENDIX C: SAR TISSUE SPECIFICATIONS

APPENDIX D: SAR SYSTEM VALIDATION

APPENDIX E: DUT ANTENNA DIAGRAM & SAR TEST SETUP PHOTOGRAPHS

APPENDIX F: POWER REDUCTION VERIFICATION

APPENDIX G: DOWNLINK LTE CA RF CONDUCTED POWERS

APPENDIX H: PROBE AND DIPOLE CALIBRATION CERTIFICATES

© 2020 PCTEST All rights reserved. Unless otherwise specified, no part of this report may be reproduced or utilized in any part, form or by any means, electronic or mechanical, including photocopying and microfilm, without permission in writing from PCTEST. If you have any questions about this international copyright or have an enquiry about obtaining additional rights to this report or assembly of contents thereof, please contact INFO@PCTEST.COM.

1 DEVICE UNDER TEST

1.1 Device Overview

Band & Mode	Operating Modes	Tx Frequency
UMTS 850	Data	826.40 - 846.60 MHz
UMTS 1750	Data	1712.4 - 1752.6 MHz
UMTS 1900	Data	1852.4 - 1907.6 MHz
LTE Band 71	Data	665.5 - 695.5 MHz
LTE Band 12	Data	699.7 - 715.3 MHz
LTE Band 13	Data	779.5 - 784.5 MHz
LTE Band 26 (Cell)	Data	814.7 - 848.3 MHz
LTE Band 5 (Cell)	Data	824.7 - 848.3 MHz
LTE Band 66 (AWS)	Data	1710.7 - 1779.3 MHz
LTE Band 4 (AWS)	Data	1710.7 - 1754.3 MHz
LTE Band 25 (PCS)	Data	1850.7 - 1914.3 MHz
LTE Band 2 (PCS)	Data	1850.7 - 1909.3 MHz
LTE Band 41	Data	2498.5 - 2687.5 MHz
2.4 GHz WLAN	Data	2412 - 2462 MHz
U-NII-1	Data	5180 - 5240 MHz
U-NII-2A	Data	5260 - 5320 MHz
U-NII-2C	Data	5500 - 5720 MHz
U-NII-3	Data	5745 - 5825 MHz
Bluetooth	Data	2402 - 2480 MHz

1.2 Power Reduction for SAR

This device uses a power reduction mechanism for SAR compliance. The power reduction mechanism is activated when the device is used in close proximity to the user's body. FCC KDB Publication 616217 D04v01r02 Section 6 was used as a guideline for selecting SAR test distances for this device. Detailed descriptions of the power reduction mechanism are included in the operational description.

© 2020 PCTEST All rights reserved. Unless otherwise specified, no part of this report may be reproduced or utilized in any part, form or by any means, electronic or mechanical, including photocopying and microfilm, without permission in writing from PCTEST. If you have any questions about this international copyright or have an enquiry about obtaining additional rights to this report or assembly of contents thereof, please contact INFO@PCTEST.COM.

1.3 Nominal and Maximum Output Power Specifications

This device operates using the following maximum and nominal output power specifications. SAR values were scaled to the maximum allowed power to determine compliance per KDB Publication 447498 D01v06.

1.3.1 2g/3g/4g Output Power

UMTS Band 5 (850 MHz)				
Power Level	Mode / Band	Modulated Average Output Power (in dBm)		
		3GPP WCDMA Rel 99	3GPP HSDPA Rel 5	3GPP HSUPA Rel 6
Max	Max allowed power	25.2	25.2	25.2
	Nominal	24.7	24.7	24.7
Proximity Sensor Active	Max allowed power	18.7	18.7	18.7
	Nominal	18.2	18.2	18.2
UMTS Band 4 (1750 MHz)				
Power Level	Mode / Band	Modulated Average Output Power (in dBm)		
		3GPP WCDMA Rel 99	3GPP HSDPA Rel 5	3GPP HSUPA Rel 6
Max	Max allowed power	25.2	25.2	25.2
	Nominal	24.7	24.7	24.7
Proximity Sensor Active	Max allowed power	12.7	12.7	12.7
	Nominal	12.2	12.2	12.2
UMTS Band 2 (1900 MHz)				
Power Level	Mode / Band	Modulated Average Output Power (in dBm)		
		3GPP WCDMA Rel 99	3GPP HSDPA Rel 5	3GPP HSUPA Rel 6
Max	Max allowed power	24.7	24.7	24.7
	Nominal	24.2	24.2	24.2
Proximity Sensor Active	Max allowed power	11.7	11.7	11.7
	Nominal	11.2	11.2	11.2

© 2020 PCTEST All rights reserved. Unless otherwise specified, no part of this report may be reproduced or utilized in any part, form or by any means, electronic or mechanical, including photocopying and microfilm, without permission in writing from PCTEST. If you have any questions about this international copyright or have an enquiry about obtaining additional rights to this report or assembly of contents thereof, please contact INFO@PCTEST.COM.

Mode / Band		Modulated Average Output Power (in dBm)	
		Max	Proximity Sensor Active
LTE Band 71	Max allowed power	25.2	17.7
	Nominal	24.7	17.2
LTE Band 12	Max allowed power	25.2	18.7
	Nominal	24.7	18.2
LTE Band 13	Max allowed power	25.2	17.2
	Nominal	24.7	16.7
LTE Band 26 (Cell)	Max allowed power	25.2	18.2
	Nominal	24.7	17.7
LTE Band 5 (Cell)	Max allowed power	25.2	18.2
	Nominal	24.7	17.7
LTE Band 66 (AWS)	Max allowed power	25.2	12.7
	Nominal	24.7	12.2
LTE Band 4 (AWS)	Max allowed power	25.2	12.7
	Nominal	24.7	12.2
LTE Band 25 (PCS)	Max allowed power	24.7	11.7
	Nominal	24.2	11.2
LTE Band 2 (PCS)	Max allowed power	24.7	11.7
	Nominal	24.2	11.2
LTE Band 41 (PC3)	Max allowed power	23.2	13.7
	Nominal	22.7	13.2
LTE Band 41 (PC2)	Max allowed power	25.2	13.7
	Nominal	24.7	13.2

© 2020 PCTEST All rights reserved. Unless otherwise specified, no part of this report may be reproduced or utilized in any part, form or by any means, electronic or mechanical, including photocopying and microfilm, without permission in writing from PCTEST. If you have any questions about this international copyright or have an enquiry about obtaining additional rights to this report or assembly of contents thereof, please contact INFO@PCTEST.COM.

1.3.1 Max WLAN Output Power

Mode / Band		Modulated Average - Antenna 1 (dBm)				
	Channel	1-2	3	4-9	10	11
IEEE 802.11b (2.4 GHz)	Maximum	20.0				
	Nominal	19.0				
IEEE 802.11g (2.4 GHz)	Maximum	17.0	18.0	18.0	17.0	17.0
	Nominal	16.0	17.0	17.0	16.0	16.0
IEEE 802.11n (2.4 GHz)	Maximum	16.0	16.5	17.0	16.0	16.0
	Nominal	15.0	15.5	16.0	15.0	15.0

Mode / Band		Modulated Average - Antenna 2 (dBm)				
	Channel	1-2	3	4-9	10	11
IEEE 802.11b (2.4 GHz)	Maximum	17.0				
	Nominal	16.0				
IEEE 802.11g (2.4 GHz)	Maximum	14.0	15.0	15.0	14.5	14.0
	Nominal	13.0	14.0	14.0	13.5	13.0
IEEE 802.11n (2.4 GHz)	Maximum	13.0	13.5	14.0	13.5	13.0
	Nominal	12.0	12.5	13.0	12.5	12.0

Mode / Band		Modulated Average - MIMO (dBm)				
		20 MHz Bandwidth				
	Channel	1-2	3	4-9	10	11
IEEE 802.11g (2.4 GHz)	Maximum	18.5	19.5	19.5	18.9	18.5
	Nominal	17.5	18.5	18.5	17.9	17.5
IEEE 802.11n (2.4 GHz)	Maximum	17.5	18.0	18.5	18.0	17.5
	Nominal	16.5	17.0	17.5	17.0	16.5

Mode / Band		Modulated Average - Antenna 1 (dBm)																							
		20 MHz Bandwidth									40 MHz Bandwidth								80 MHz Bandwidth						
	Channel	36-60	64	100	104-132	136	140-149	153	157	161-165	38-62	102	110	118-126	134	142	151	159	42	58	106	122	138	155
IEEE 802.11a (5 GHz)	Maximum	14.5	14.0	13.5	13.5	13.0	12.5	12.5	13.0	13.5														
	Nominal	13.5	13.0	12.5	12.5	12.0	11.5	11.5	12.0	12.5														
IEEE 802.11n (5 GHz)	Maximum	14.5	14.0	13.5	13.5	13.0	12.5	12.5	13.0	13.5	14.5	13.5	13.5	13.5	13.0	12.5	12.5	13.0						
	Nominal	13.5	13.0	12.5	12.5	12.0	11.5	11.5	12.0	12.5	13.5	12.5	12.5	12.5	12.0	11.5	11.5	12.0						
IEEE 802.11ac (5 GHz)	Maximum	14.5	14.0	13.5	13.5	13.0	12.5	12.5	13.0	13.5	14.5	13.5	13.5	13.5	13.0	12.5	12.5	13.0	13.5	13.5	13.0	13.5	12.5	12.5
	Nominal	13.5	13.0	12.5	12.5	12.0	11.5	11.5	12.0	12.5	13.5	12.5	12.5	12.5	12.0	11.5	11.5	12.0	12.5	12.5	12.0	12.5	11.5	11.5

Mode / Band		Modulated Average - Antenna 2 (dBm)																							
		20 MHz Bandwidth									40 MHz Bandwidth								80 MHz Bandwidth						
	Channel	36-60	64	100	104-132	136	140-149	153	157	161-165	38-62	102	110	118-126	134	142	151	159	42	58	106	122	138	155
IEEE 802.11a (5 GHz)	Maximum	14.5	14.5	13.5	13.5	13.5	13.5	14.0	14.0	13.5														
	Nominal	13.5	13.5	12.5	12.5	12.5	12.5	13.0	13.0	12.5														
IEEE 802.11n (5 GHz)	Maximum	14.5	14.5	13.5	13.5	13.5	13.5	14.0	14.0	13.5	14.5	13.5	13.5	13.5	13.5	13.5	14.0	13.5						
	Nominal	13.5	13.5	12.5	12.5	12.5	12.5	13.0	13.0	12.5	13.5	12.5	12.5	12.5	12.5	12.5	13.0	12.5						
IEEE 802.11ac (5 GHz)	Maximum	14.5	14.5	13.5	13.5	13.5	13.5	14.0	14.0	13.5	14.5	13.5	13.5	13.5	13.5	13.5	14.0	13.5	13.5	13.5	13.5	13.5	13.5	13.5
	Nominal	13.5	13.5	12.5	12.5	12.5	12.5	13.0	13.0	12.5	13.5	12.5	12.5	12.5	12.5	12.5	13.0	12.5	12.5	12.5	12.5	12.5	12.5	12.5

Mode / Band		Modulated Average - MIMO (dBm)																							
		20 MHz Bandwidth									40 MHz Bandwidth								80 MHz Bandwidth						
	Channel	36-60	64	100	104-132	136	140-149	153	157	161-165	38-62	102	110	118-126	134	142	151	159	42	58	106	122	138	155
IEEE 802.11a (5 GHz)	Maximum	17.5	17.0	16.5	16.5	16.0	16.0	16.0	16.5	16.5														
	Nominal	16.5	16.0	15.5	15.5	15.0	15.0	15.0	15.5	15.5														
IEEE 802.11n (5 GHz)	Maximum	17.5	17.0	16.5	16.5	16.0	16.0	16.0	16.5	16.5	17.5	16.5	16.5	16.5	16.0	16.0	16.0	16.0						
	Nominal	16.5	16.0	15.5	15.5	15.0	15.0	15.0	15.5	15.5	16.5	15.5	15.5	15.5	15.0	15.0	15.0	15.0						
IEEE 802.11ac (5 GHz)	Maximum	17.5	17.0	16.5	16.5	16.0	16.0	16.0	16.5	16.5	17.5	16.5	16.5	16.5	16.0	16.0	16.0	16.0	16.5	16.5	16.3	16.5	16.0	16.0
	Nominal	16.5	16.0	15.5	15.5	15.0	15.0	15.0	15.5	15.5	16.5	15.5	15.5	15.5	15.0	15.0	15.0	15.0	15.5	15.5	15.3	15.5	15.0	15.0

Mode/Band		Modulated Average (dBm)
Bluetooth (1 Mbps)	Maximum	7.0
	Nominal	6.0
Bluetooth EDR (2,3 Mbps)	Maximum	6.5
	Nominal	5.5
Bluetooth LE	Maximum	-1.0
	Nominal	-2.0

© 2020 PCTEST All rights reserved. Unless otherwise specified, no part of this report may be reproduced or utilized in any part, form or by any means, electronic or mechanical, including photocopying and microfilm, without permission in writing from PCTEST. If you have any questions about this international copyright or have an enquiry about obtaining additional rights to this report or assembly of contents thereof, please contact INFO@PCTEST.COM.

1.3.2 Reduced WLAN Output Power

Mode / Band		Modulated Average - Antenna 1 (dBm)				
	Channel	1-2	3	4-9	10	11
IEEE 802.11b (2.4 GHz)	Maximum	10.0				
	Nominal	9.0				
IEEE 802.11g (2.4 GHz)	Maximum	10.0				
	Nominal	9.0				
IEEE 802.11n (2.4 GHz)	Maximum	10.0				
	Nominal	9.0				

Mode / Band		Modulated Average - Antenna 2 (dBm)				
	Channel	1-2	3	4-9	10	11
IEEE 802.11b (2.4 GHz)	Maximum	7.0				
	Nominal	6.0				
IEEE 802.11g (2.4 GHz)	Maximum	7.0				
	Nominal	6.0				
IEEE 802.11n (2.4 GHz)	Maximum	7.0				
	Nominal	6.0				

Mode / Band		Modulated Average - MIMO (dBm)				
		20 MHz Bandwidth				
	Channel	1-2	3	4-9	10	11
IEEE 802.11g (2.4 GHz)	Maximum	11.5				
	Nominal	10.5				
IEEE 802.11n (2.4 GHz)	Maximum	11.5				
	Nominal	10.5				

Mode / Band		Modulated Average - Antenna 1 (dBm)																						
		20 MHz Bandwidth									40 MHz Bandwidth								80 MHz Bandwidth					
	Channel	36-60	64	100	104-132	136	140-149	153	157	161-165	38-62	102	110	118-126	134	142	151	159	42	58	106	122	138	155
IEEE 802.11a (5 GHz)	Maximum	7.5																						
	Nominal	6.5																						
IEEE 802.11n (5 GHz)	Maximum	7.5									7.5													
	Nominal	6.5									6.5													
IEEE 802.11ac (5 GHz)	Maximum	7.5									7.5								7.0					
	Nominal	6.5									6.5								6.0					

Mode / Band		Modulated Average - Antenna 2 (dBm)																						
		20 MHz Bandwidth									40 MHz Bandwidth								80 MHz Bandwidth					
	Channel	36-60	64	100	104-132	136	140-149	153	157	161-165	38-62	102	110	118-126	134	142	151	159	42	58	106	122	138	155
IEEE 802.11a (5 GHz)	Maximum	7.5																						
	Nominal	6.5																						
IEEE 802.11n (5 GHz)	Maximum	7.5									7.5													
	Nominal	6.5									6.5													
IEEE 802.11ac (5 GHz)	Maximum	7.5									7.5								7.0					
	Nominal	6.5									6.5								6.0					

Mode / Band		Modulated Average - MIMO (dBm)																						
		20 MHz Bandwidth									40 MHz Bandwidth								80 MHz Bandwidth					
	Channel	36-60	64	100	104-132	136	140-149	153	157	161-165	38-62	102	110	118-126	134	142	151	159	42	58	106	122	138	155
IEEE 802.11a (5 GHz)	Maximum	10.5																						
	Nominal	9.5																						
IEEE 802.11n (5 GHz)	Maximum	10.5									10.5													
	Nominal	9.5									9.5													
IEEE 802.11ac (5 GHz)	Maximum	10.5									10.5								10.0					
	Nominal	9.5									9.5								9.0					

© 2020 PCTEST All rights reserved. Unless otherwise specified, no part of this report may be reproduced or utilized in any part, form or by any means, electronic or mechanical, including photocopying and microfilm, without permission in writing from PCTEST. If you have any questions about this international copyright or have an enquiry about obtaining additional rights to this report or assembly of contents thereof, please contact INFO@PCTEST.COM.

1.4 DUT Antenna Locations

The overall diagonal dimension of the device is > 200 mm. A diagram showing the location of the device antennas can be found in Appendix E. Exact antenna dimensions and separation distances are shown in the Technical Descriptions in the FCC filings.

Table 1-1
Device Edges/Sides for SAR Testing

Mode	Back	Front	Top	Bottom	Right	Left
UMTS 850	Yes	No	Yes	No	Yes	Yes
UMTS 1750	Yes	No	Yes	No	Yes	Yes
UMTS 1900	Yes	No	Yes	No	Yes	Yes
LTE Band 71	Yes	No	Yes	No	Yes	Yes
LTE Band 12	Yes	No	Yes	No	Yes	Yes
LTE Band 13	Yes	No	Yes	No	Yes	Yes
LTE Band 26 (Cell)	Yes	No	Yes	No	Yes	Yes
LTE Band 66 (AWS)	Yes	No	Yes	No	Yes	Yes
LTE Band 25 (PCS)	Yes	No	Yes	No	Yes	Yes
LTE Band 41	Yes	No	Yes	No	No	Yes
2.4 GHz WLAN Ant 1	Yes	No	Yes	No	Yes	Yes
2.4 GHz WLAN Ant 2	Yes	No	Yes	No	Yes	Yes
5 GHz WLAN Ant 1	Yes	No	Yes	No	Yes	Yes
5 GHz WLAN Ant 2	Yes	No	Yes	No	Yes	Yes
Bluetooth	Yes	No	Yes	No	Yes	Yes

Note: Per FCC KDB Publication 616217 D04v01r01, particular edges were not required to be evaluated for SAR based on the SAR exclusion threshold in KDB 447498 D01v06. Additional edges may have been evaluated for simultaneous transmission analysis.

1.5 Simultaneous Transmission Capabilities

According to FCC KDB Publication 447498 D01v06, transmitters are considered to be operating simultaneously when there is overlapping transmission, with the exception of transmissions during network hand-offs with maximum hand-off duration less than 30 seconds.

This device contains multiple transmitters that may operate simultaneously, and therefore requires a simultaneous transmission analysis according to FCC KDB Publication 447498 D01v06 4.3.2 procedures.

© 2020 PCTEST All rights reserved. Unless otherwise specified, no part of this report may be reproduced or utilized in any part, form or by any means, electronic or mechanical, including photocopying and microfilm, without permission in writing from PCTEST. If you have any questions about this international copyright or have an enquiry about obtaining additional rights to this report or assembly of contents thereof, please contact INFO@PCTEST.COM.

Table 1-2
Simultaneous Transmission Scenarios

No.	Capable Transmit Configuration	Body
1	UMTS + 2.4 GHz WI-FI	Yes
2	UMTS + 5 GHz WI-FI	Yes
3	UMTS + 2.4 GHz Bluetooth	Yes
4	UMTS + 2.4 GHz WI-FI MIMO	Yes
5	UMTS + 5 GHz WI-FI MIMO	Yes
6	LTE + 2.4 GHz WI-FI	Yes
7	LTE + 5 GHz WI-FI	Yes
8	LTE + 2.4 GHz Bluetooth	Yes
9	LTE + 2.4 GHz WI-FI MIMO	Yes
10	LTE + 5 GHz WI-FI MIMO	Yes

1. 2.4 GHz WLAN, 5 GHz WLAN, and 2.4 GHz Bluetooth share the same antenna path and cannot transmit simultaneously.
2. All licensed modes share the same antenna path and cannot transmit simultaneously.
3. This device supports 2x2 MIMO Tx for WLAN 802.11a/g/n/ac. 802.11a/g/n/ac supports CDD and STBC and 802.11n/ac additionally supports SDM. Each WLAN antenna can transmit independently or together when operating with MIMO.

1.6 Miscellaneous SAR Test Considerations

(A) WIFI/BT

Since U-NII-1 and U-NII-2A bands have the same maximum output power and the highest reported SAR for U-NII-2A is less than 1.2 W/kg, SAR is not required for U-NII-1 band according to FCC KDB Publication 248227 D01v02r02.

This device supports IEEE 802.11ac with the following features:
a) Up to 80 MHz Bandwidth only
b) No aggregate channel configurations
c) 2 Tx antenna output
d) 256 QAM is supported
d) TDWR and Band gap channels are supported

(B) Licensed Transmitter(s)

This device is only capable of QPSK HSUPA in the uplink. Therefore, no additional SAR tests are required beyond that described for devices with HSUPA in KDB 941225 D01v03r01.

LTE SAR for the higher modulations and lower bandwidths were not tested since the maximum average output power of all required channels and configurations was not more than 0.5 dB higher than the highest bandwidth; and the reported LTE SAR for the highest bandwidth was less than 1.45 W/kg for all configurations according to FCC KDB 941225 D05v02r04.

This device supports LTE Carrier Aggregation (CA) in the downlink. All uplink communications are identical to Release 8 specifications. Per FCC KDB Publication 941225 D05A v01r02, SAR for LTE CA operations was not needed since the maximum average output power in LTE CA mode was not >0.25 dB higher than the

© 2020 PCTEST All rights reserved. Unless otherwise specified, no part of this report may be reproduced or utilized in any part, form or by any means, electronic or mechanical, including photocopying and microfilm, without permission in writing from PCTEST. If you have any questions about this international copyright or have an enquiry about obtaining additional rights to this report or assembly of contents thereof, please contact INFO@PCTEST.COM.

maximum output power when downlink carrier aggregation was inactive. The downlink carrier aggregation exclusion analysis can be found in Appendix E.

This device supports LTE capabilities with overlapping transmission frequency ranges. When the supported frequency range of an LTE Band falls completely within an LTE band with a larger transmission frequency range, both LTE bands have the same target power (or the band with the larger transmission frequency range has a higher target power), and both LTE bands share the same transmission path and signal characteristics, SAR was only assessed for the band with the larger transmission frequency range.

This device supports both Power Class 2 (PC2) and Power Class 3 (PC3) for LTE Band 41. Per May 2017 TCB Workshop Notes, SAR tests were performed with Power Class 3 (given the specific UL/DL limitations for Power Class 2). Additionally, SAR testing for the power class condition was evaluated for the highest configuration in Power Class 3 for each test configuration to confirm the results were scalable linearly (See Section 13.1).

1.7 Guidance Applied

- FCC KDB Publication 941225 D01v03r01, D05v02r04, D05Av01r02, D06v02r01 (3G/4G)
- FCC KDB Publication 248227 D01v02r02 (SAR Considerations for 802.11 Devices)
- FCC KDB Publication 447498 D01v06 (General SAR Guidance)
- FCC KDB Publication 865664 D01v01r04, D02v01r02 (SAR Measurements up to 6 GHz)
- FCC KDB Publication 616217 D04v01r02 (Tablet)
- May 2017 TCB Workshop Notes (LTE Band 41 Power Class 2/3)

1.8 Device Serial Numbers

Several samples with identical hardware were used to support SAR testing. The manufacturer has confirmed that the device(s) tested have the same physical, mechanical and thermal characteristics and are within operational tolerances expected for production units. The serial numbers used for each test are indicated alongside the results in Section 10.

© 2020 PCTEST All rights reserved. Unless otherwise specified, no part of this report may be reproduced or utilized in any part, form or by any means, electronic or mechanical, including photocopying and microfilm, without permission in writing from PCTEST. If you have any questions about this international copyright or have an enquiry about obtaining additional rights to this report or assembly of contents thereof, please contact INFO@PCTEST.COM.

2 LTE INFORMATION

LTE Information					
Form Factor	Portable Tablet				
Frequency Range of each LTE transmission band	LTE Band 71 (665.5 - 695.5 MHz)				
	LTE Band 12 (699.7 - 715.3 MHz)				
	LTE Band 13 (779.5 - 784.5 MHz)				
	LTE Band 26 (Cell) (814.7 - 848.3 MHz)				
	LTE Band 5 (Cell) (824.7 - 848.3 MHz)				
	LTE Band 66 (AWS) (1710.7 - 1779.3 MHz)				
	LTE Band 4 (AWS) (1710.7 - 1754.3 MHz)				
	LTE Band 25 (PCS) (1850.7 - 1914.3 MHz)				
	LTE Band 2 (PCS) (1850.7 - 1909.3 MHz)				
	LTE Band 41 (2498.5 - 2687.5 MHz)				
Channel Bandwidths	LTE Band 71: 5 MHz, 10 MHz, 15 MHz, 20 MHz				
	LTE Band 12: 1.4 MHz, 3 MHz, 5 MHz, 10 MHz				
	LTE Band 13: 5 MHz, 10 MHz				
	LTE Band 26 (Cell): 1.4 MHz, 3 MHz, 5 MHz, 10 MHz, 15 MHz				
	LTE Band 5 (Cell): 1.4 MHz, 3 MHz, 5 MHz, 10 MHz				
	LTE Band 66 (AWS): 1.4 MHz, 3 MHz, 5 MHz, 10 MHz, 15 MHz, 20 MHz				
	LTE Band 4 (AWS): 1.4 MHz, 3 MHz, 5 MHz, 10 MHz, 15 MHz, 20 MHz				
	LTE Band 25 (PCS): 1.4 MHz, 3 MHz, 5 MHz, 10 MHz, 15 MHz, 20 MHz				
	LTE Band 2 (PCS): 1.4 MHz, 3 MHz, 5 MHz, 10 MHz, 15 MHz, 20 MHz				
	LTE Band 41: 5 MHz, 10 MHz, 15 MHz, 20 MHz				
Channel Numbers and Frequencies (MHz)	Low	Low-Mid	Mid	Mid-High	High
LTE Band 71: 5 MHz	665.5 (133147)		680.5 (133297)	695.5 (133447)	
LTE Band 71: 10 MHz	668 (133172)		680.5 (133297)	693 (133422)	
LTE Band 71: 15 MHz	670.5 (133197)		680.5 (133297)	690.5 (133397)	
LTE Band 71: 20 MHz	673 (133222)		680.5 (133297)	688 (133372)	
LTE Band 12: 1.4 MHz	699.7 (23017)		707.5 (23095)	715.3 (23173)	
LTE Band 12: 3 MHz	700.5 (23025)		707.5 (23095)	714.5 (23165)	
LTE Band 12: 5 MHz	701.5 (23035)		707.5 (23095)	713.5 (23155)	
LTE Band 12: 10 MHz	704 (23060)		707.5 (23095)	711 (23130)	
LTE Band 13: 5 MHz	779.5 (23205)		782 (23230)	784.5 (23255)	
LTE Band 13: 10 MHz	N/A		782 (23230)	N/A	
LTE Band 26 (Cell): 1.4 MHz	814.7 (26697)		831.5 (26865)	848.3 (27033)	
LTE Band 26 (Cell): 3 MHz	815.5 (26705)		831.5 (26865)	847.5 (27025)	
LTE Band 26 (Cell): 5 MHz	816.5 (26715)		831.5 (26865)	846.5 (27015)	
LTE Band 26 (Cell): 10 MHz	819 (26740)		831.5 (26865)	844 (26990)	
LTE Band 26 (Cell): 15 MHz	821.5 (26765)		831.5 (26865)	841.5 (26965)	
LTE Band 5 (Cell): 1.4 MHz	824.7 (20407)		836.5 (20525)	848.3 (20643)	
LTE Band 5 (Cell): 3 MHz	825.5 (20415)		836.5 (20525)	847.5 (20635)	
LTE Band 5 (Cell): 5 MHz	826.5 (20425)		836.5 (20525)	846.5 (20625)	
LTE Band 5 (Cell): 10 MHz	829 (20450)		836.5 (20525)	844 (20600)	
LTE Band 66 (AWS): 1.4 MHz	1710.7 (131979)		1745 (132322)	1779.3 (132665)	
LTE Band 66 (AWS): 3 MHz	1711.5 (131987)		1745 (132322)	1778.5 (132657)	
LTE Band 66 (AWS): 5 MHz	1712.5 (131997)		1745 (132322)	1777.5 (132647)	
LTE Band 66 (AWS): 10 MHz	1715 (132022)		1745 (132322)	1775 (132622)	
LTE Band 66 (AWS): 15 MHz	1717.5 (132047)		1745 (132322)	1772.5 (132597)	
LTE Band 66 (AWS): 20 MHz	1720 (132072)		1745 (132322)	1770 (132572)	
LTE Band 4 (AWS): 1.4 MHz	1710.7 (19957)		1732.5 (20175)	1754.3 (20393)	
LTE Band 4 (AWS): 3 MHz	1711.5 (19965)		1732.5 (20175)	1753.5 (20385)	
LTE Band 4 (AWS): 5 MHz	1712.5 (19975)		1732.5 (20175)	1752.5 (20375)	
LTE Band 4 (AWS): 10 MHz	1715 (20000)		1732.5 (20175)	1750 (20350)	
LTE Band 4 (AWS): 15 MHz	1717.5 (20025)		1732.5 (20175)	1747.5 (20325)	
LTE Band 4 (AWS): 20 MHz	1720 (20050)		1732.5 (20175)	1745 (20300)	
LTE Band 25 (PCS): 1.4 MHz	1850.7 (26047)		1882.5 (26365)	1914.3 (26683)	
LTE Band 25 (PCS): 3 MHz	1851.5 (26055)		1882.5 (26365)	1913.5 (26675)	
LTE Band 25 (PCS): 5 MHz	1852.5 (26065)		1882.5 (26365)	1912.5 (26665)	
LTE Band 25 (PCS): 10 MHz	1855 (26090)		1882.5 (26365)	1910 (26640)	
LTE Band 25 (PCS): 15 MHz	1857.5 (26115)		1882.5 (26365)	1907.5 (26615)	
LTE Band 25 (PCS): 20 MHz	1860 (26140)		1882.5 (26365)	1905 (26590)	
LTE Band 2 (PCS): 1.4 MHz	1850.7 (18607)		1880 (18900)	1909.3 (19193)	
LTE Band 2 (PCS): 3 MHz	1851.5 (18615)		1880 (18900)	1908.5 (19185)	
LTE Band 2 (PCS): 5 MHz	1852.5 (18625)		1880 (18900)	1907.5 (19175)	
LTE Band 2 (PCS): 10 MHz	1855 (18650)		1880 (18900)	1905 (19150)	
LTE Band 2 (PCS): 15 MHz	1857.5 (18675)		1880 (18900)	1902.5 (19125)	
LTE Band 2 (PCS): 20 MHz	1860 (18700)		1880 (18900)	1900 (19100)	
LTE Band 41: 5 MHz	2506 (39750)	2549.5 (40185)	2593 (40620)	2636.5 (41055)	2680 (41490)
LTE Band 41: 10 MHz	2506 (39750)	2549.5 (40185)	2593 (40620)	2636.5 (41055)	2680 (41490)
LTE Band 41: 15 MHz	2506 (39750)	2549.5 (40185)	2593 (40620)	2636.5 (41055)	2680 (41490)
LTE Band 41: 20 MHz	2506 (39750)	2549.5 (40185)	2593 (40620)	2636.5 (41055)	2680 (41490)
UE Category	DL UE Cat 7, UL UE Cat 13				
Modulations Supported in UL	QPSK, 16QAM, 64QAM				
LTE MPR Permanently implemented per 3GPP TS 36.101 section 6.2.3~6.2.5? (manufacturer attestation to be provided)	YES				
A-MPR (Additional MPR) disabled for SAR Testing?	YES				
LTE Carrier Aggregation Possible Combinations	The technical description includes all the possible carrier aggregation combinations				
LTE Additional Information	This device does not support full CA features on 3GPP Release 11. All uplink communications are identical to the Release 8 Specifications. Uplink communications are done on the PCC. The following LTE Release 11 Features are not supported: Relay, HetNet, Enhanced MIMO, eICIC, WIFI Offloading, eMBMS, Cross-Carrier Scheduling, Enhanced SC-FDMA.				

© 2020 PCTEST All rights reserved. Unless otherwise specified, no part of this report may be reproduced or utilized in any part, form or by any means, electronic or mechanical, including photocopying and microfilm, without permission in writing from PCTEST. If you have any questions about this international copyright or have an enquiry about obtaining additional rights to this report or assembly of contents thereof, please contact INFO@PCTEST.COM.

3 INTRODUCTION

The FCC and Innovation, Science, and Economic Development Canada have adopted the guidelines for evaluating the environmental effects of radio frequency (RF) radiation in ET Docket 93-62 on Aug. 6, 1996 and Health Canada Safety Code 6 to protect the public and workers from the potential hazards of RF emissions due to FCC-regulated portable devices. [1]

The safety limits used for the environmental evaluation measurements are based on the criteria published by the American National Standards Institute (ANSI) for localized specific absorption rate (SAR) in IEEE/ANSI C95.1-1992 Standard for Safety Levels with Respect to Human Exposure to Radio Frequency Electromagnetic Fields, 3 kHz to 300 GHz [3] and Health Canada RF Exposure Guidelines Safety Code 6 [22]. The measurement procedure described in IEEE/ANSI C95.3-2002 Recommended Practice for the Measurement of Potentially Hazardous Electromagnetic Fields - RF and Microwave [4] is used for guidance in measuring the Specific Absorption Rate (SAR) due to the RF radiation exposure from the Equipment Under Test (EUT). These criteria for SAR evaluation are similar to those recommended by the International Committee for Non-Ionizing Radiation Protection (ICNIRP) in Biological Effects and Exposure Criteria for Radiofrequency Electromagnetic Fields," Report No. Vol 74. SAR is a measure of the rate of energy absorption due to exposure to an RF transmitting source. SAR values have been related to threshold levels for potential biological hazards.

3.1 SAR Definition

Specific Absorption Rate is defined as the time derivative (rate) of the incremental energy (dU) absorbed by (dissipated in) an incremental mass (dm) contained in a volume element (dV) of a given density (ρ). It is also defined as the rate of RF energy absorption per unit mass at a point in an absorbing body (see Equation 3-1).

Equation 3-1
SAR Mathematical Equation

$$SAR = \frac{d}{dt}\left(\frac{dU}{dm}\right) = \frac{d}{dt}\left(\frac{dU}{\rho dv}\right)$$

SAR is expressed in units of Watts per Kilogram (W/kg).

$$SAR = \frac{\sigma \cdot E^2}{\rho}$$

where:

σ = conductivity of the tissue-simulating material (S/m)
ρ = mass density of the tissue-simulating material (kg/m^3)
E = Total RMS electric field strength (V/m)

NOTE: The primary factors that control rate of energy absorption were found to be the wavelength of the incident field in relation to the dimensions and geometry of the irradiated organism, the orientation of the organism in relation to the polarity of field vectors, the presence of reflecting surfaces, and whether conductive contact is made by the organism with a ground plane.[6]

© 2020 PCTEST All rights reserved. Unless otherwise specified, no part of this report may be reproduced or utilized in any part, form or by any means, electronic or mechanical, including photocopying and microfilm, without permission in writing from PCTEST. If you have any questions about this international copyright or have an enquiry about obtaining additional rights to this report or assembly of contents thereof, please contact INFO@PCTEST.COM.

4 DOSIMETRIC ASSESSMENT

4.1 Measurement Procedure

The evaluation was performed using the following procedure compliant to FCC KDB Publication 865664 D01v01r04 and IEEE 1528-2013:

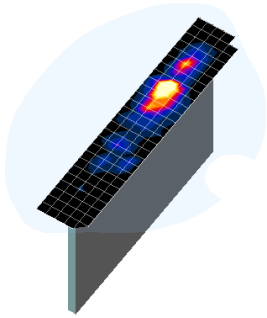

Figure 4-1
Sample SAR Area Scan

1. The SAR distribution at the exposed side of the head or body was measured at a distance no greater than 5.0 mm from the inner surface of the shell. The area covered the entire dimension of the device-head and body interface and the horizontal grid resolution was determined per FCC KDB Publication 865664 D01v01r04 (See Table 4-1) and IEEE 1528-2013.
2. The point SAR measurement was taken at the maximum SAR region determined from Step 1 to enable the monitoring of SAR fluctuations/drifts during the 1g/10g cube evaluation. SAR at this fixed point was measured and used as a reference value.
3. Based on the area scan data, the peak of the region with maximum SAR was determined by spline interpolation. Around this point, a volume was assessed according to the measurement resolution and volume size requirements of FCC KDB Publication 865664 D01v01r04 (See Table 4-1) and IEEE 1528-2013. On the basis of this data set, the spatial peak SAR value was evaluated with the following procedure (see references or the DASY manual online for more details):

   a. SAR values at the inner surface of the phantom are extrapolated from the measured values along the line away from the surface with spacing no greater than that in Table 4-1. The extrapolation was based on a least-squares algorithm. A polynomial of the fourth order was calculated through the points in the z-axis (normal to the phantom shell).

   b. After the maximum interpolated values were calculated between the points in the cube, the SAR was averaged over the spatial volume (1g or 10g) using a 3D-Spline interpolation algorithm. The 3D-spline is composed of three one-dimensional splines with the "Not a knot" condition (in x, y, and z directions). The volume was then integrated with the trapezoidal algorithm. One thousand points (10 x 10 x 10) were obtained through interpolation, in order to calculate the averaged SAR.

   c. All neighboring volumes were evaluated until no neighboring volume with a higher average value was found.
4. The SAR reference value, at the same location as step 2, was re-measured after the zoom scan was complete to calculate the SAR drift. If the drift deviated by more than 5%, the SAR test and drift measurements were repeated.

Table 4-1
Area and Zoom Scan Resolutions per FCC KDB Publication 865664 D01v01r04*

Frequency	Maximum Area Scan Resolution (mm) (Δx_{area}, Δy_{area})	Maximum Zoom Scan Resolution (mm) (Δx_{zoom}, Δy_{zoom})	Maximum Zoom Scan Spatial Resolution (mm)			Minimum Zoom Scan Volume (mm) (x,y,z)
			Uniform Grid	Graded Grid		
			$\Delta z_{zoom}(n)$	$\Delta z_{zoom}(1)$*	$\Delta z_{zoom}(n>1)$*	
≤ 2 GHz	≤ 15	≤ 8	≤ 5	≤ 4	≤ 1.5*$\Delta z_{zoom}(n-1)$	≥ 30
2-3 GHz	≤ 12	≤ 5	≤ 5	≤ 4	≤ 1.5*$\Delta z_{zoom}(n-1)$	≥ 30
3-4 GHz	≤ 12	≤ 5	≤ 4	≤ 3	≤ 1.5*$\Delta z_{zoom}(n-1)$	≥ 28
4-5 GHz	≤ 10	≤ 4	≤ 3	≤ 2.5	≤ 1.5*$\Delta z_{zoom}(n-1)$	≥ 25
5-6 GHz	≤ 10	≤ 4	≤ 2	≤ 2	≤ 1.5*$\Delta z_{zoom}(n-1)$	≥ 22

*Also compliant to IEEE 1528-2013 Table 6

© 2020 PCTEST All rights reserved. Unless otherwise specified, no part of this report may be reproduced or utilized in any part, form or by any means, electronic or mechanical, including photocopying and microfilm, without permission in writing from PCTEST. If you have any questions about this international copyright or have an enquiry about obtaining additional rights to this report or assembly of contents thereof, please contact INFO@PCTEST.COM.

5 TEST CONFIGURATION POSITIONS

5.1 Device Holder

The device holder is made out of low-loss POM material having the following dielectric parameters: relative permittivity ε = 3 and loss tangent δ = 0.02.

5.2 SAR Testing for Tablet per KDB Publication 616217 D04v01r02

Per FCC KDB Publication 616217 D04v01r02, the back surface and edges of the tablet should be tested for SAR compliance with the tablet touching the phantom. The SAR Exclusion Threshold in KDB 447498 D01v06 can be applied to determine SAR test exclusion for adjacent edge configurations. The closest distance from the antenna to an adjacent tablet edge is used to determine if SAR testing is required for the adjacent edges, with the adjacent edge positioned against the phantom and the edge containing the antenna positioned perpendicular to the phantom.

5.3 Proximity Sensor Considerations

This device uses a power reduction mechanism to reduce output powers in certain use conditions when the device is used close the user's body.

When the device's antenna is within a certain distance of the user, the sensor activates and reduces the maximum allowed output power. However, the sensor is not active when the device is moved beyond the sensor triggering distance and the maximum output power is no longer limited. Therefore, additional evaluation is needed in the vicinity of the triggering distance to ensure SAR is compliant when the device is allowed to operate at a non-reduced output power level. FCC KDB Publication 616217 D04v01r02 Section 6 was used as a guideline for selecting SAR test distances for this device at these additional test positions. Sensor triggering distance summary data is included in Appendix F.

The sensor is designed to support sufficient detection range and sensitivity to cover regions of the sensors in all applicable directions since the sensor entirely covers the antennas.

© 2020 PCTEST All rights reserved. Unless otherwise specified, no part of this report may be reproduced or utilized in any part, form or by any means, electronic or mechanical, including photocopying and microfilm, without permission in writing from PCTEST. If you have any questions about this international copyright or have an enquiry about obtaining additional rights to this report or assembly of contents thereof, please contact INFO@PCTEST.COM.

6 RF EXPOSURE LIMITS

6.1 Uncontrolled Environment

UNCONTROLLED ENVIRONMENTS are defined as locations where there is the exposure of individuals who have no knowledge or control of their exposure. The general population/uncontrolled exposure limits are applicable to situations in which the general public may be exposed or in which persons who are exposed as a consequence of their employment may not be made fully aware of the potential for exposure or cannot exercise control over their exposure. Members of the general public would come under this category when exposure is not employment-related; for example, in the case of a wireless transmitter that exposes persons in its vicinity.

6.2 Controlled Environment

CONTROLLED ENVIRONMENTS are defined as locations where there is exposure that may be incurred by persons who are aware of the potential for exposure, (i.e. as a result of employment or occupation). In general, occupational/controlled exposure limits are applicable to situations in which persons are exposed as a consequence of their employment, who have been made fully aware of the potential for exposure and can exercise control over their exposure. This exposure category is also applicable when the exposure is of a transient nature due to incidental passage through a location where the exposure levels may be higher than the general population/uncontrolled limits, but the exposed person is fully aware of the potential for exposure and can exercise control over his or her exposure by leaving the area or by some other appropriate means.

Table 6-1
SAR Human Exposure Specified in ANSI/IEEE C95.1-1992 and Health Canada Safety Code 6

HUMAN EXPOSURE LIMITS		
	UNCONTROLLED ENVIRONMENT *General Population* (W/kg) or (mW/g)	CONTROLLED ENVIRONMENT *Occupational* (W/kg) or (mW/g)
Peak Spatial Average SAR Head	1.6	8.0
Whole Body SAR	0.08	0.4
Peak Spatial Average SAR Hands, Feet, Ankle, Wrists, etc.	4.0	20

1. The Spatial Peak value of the SAR averaged over any 1 gram of tissue (defined as a tissue volume in the shape of a cube) and over the appropriate averaging time.
2. The Spatial Average value of the SAR averaged over the whole body.
3. The Spatial Peak value of the SAR averaged over any 10 grams of tissue (defined as a tissue volume in the shape of a cube) and over the appropriate averaging time.

© 2020 PCTEST All rights reserved. Unless otherwise specified, no part of this report may be reproduced or utilized in any part, form or by any means, electronic or mechanical, including photocopying and microfilm, without permission in writing from PCTEST. If you have any questions about this international copyright or have an enquiry about obtaining additional rights to this report or assembly of contents thereof, please contact INFO@PCTEST.COM.

7 FCC MEASUREMENT PROCEDURES

Power measurements for licensed transmitters are performed using a base station simulator under digital average power.

7.1 Measured and Reported SAR

Per FCC KDB Publication 447498 D01v06, when SAR is not measured at the maximum power level allowed for production units, the results must be scaled to the maximum tune-up tolerance limit according to the power applied to the individual channels tested to determine compliance. For simultaneous transmission, the measured aggregate SAR must be scaled according to the sum of the differences between the maximum tune-up tolerance and actual power used to test each transmitter. When SAR is measured at or scaled to the maximum tune-up tolerance limit, the results are referred to as *reported* SAR. The highest *reported* SAR results are identified on the grant of equipment authorization according to procedures in KDB 690783 D01v01r03.

7.2 3G SAR Test Reduction Procedure

In FCC KDB Publication 941225 D01v03r01, certain transmission modes within a frequency band and wireless mode evaluated for SAR are defined as primary modes. The equivalent modes considered for SAR test reduction are denoted as secondary modes. When the maximum output power including tune-up tolerance specified for production units in a secondary mode is ≤ 0.25 dB higher than the primary mode or when the highest reported SAR of the primary mode, scaled by the ratio of specified maximum output power and tune-up tolerance of secondary to primary mode, is ≤ 1.2 W/kg, SAR measurements are not required for the secondary mode. These criteria are referred to as the 3G SAR test reduction procedure. When the 3G SAR test reduction procedure is not satisfied, SAR measurements are additionally required for the secondary mode.

7.3 Procedures Used to Establish RF Signal for SAR

The following procedures are according to FCC KDB Publication 941225 D01v03r01 “3G SAR Measurement Procedures.”

The device is placed into a simulated call using a base station simulator in a RF shielded chamber. Establishing connections in this manner ensure a consistent means for testing SAR and are recommended for evaluating SAR [4]. Devices under test are evaluated prior to testing, with a fully charged battery and were configured to operate at maximum output power. In order to verify that the device is tested throughout the SAR test at maximum output power, the SAR measurement system measures a “point SAR” at an arbitrary reference point at the start and end of the 1 gram SAR evaluation, to assess for any power drifts during the evaluation. If the power drift deviates by more than 5%, the SAR test and drift measurements are repeated.

7.4 SAR Measurement Conditions for UMTS

7.4.1 Output Power Verification

Maximum output power is verified on the High, Middle and Low channels according to the general descriptions in section 5.2 of 3GPP TS 34.121, using the appropriate RMC with TPC (transmit power control) set to all “1s” or applying the required inner loop power control procedures to maintain maximum output power while HSUPA is active. Results for all applicable physical channel configurations (DPCCH, DPDCHn and spreading codes, HS-DPCCH etc) are tabulated in this test report. All configurations that are not supported by the DUT or cannot be measured due to technical or equipment limitations are identified.

© 2020 PCTEST All rights reserved. Unless otherwise specified, no part of this report may be reproduced or utilized in any part, form or by any means, electronic or mechanical, including photocopying and microfilm, without permission in writing from PCTEST. If you have any questions about this international copyright or have an enquiry about obtaining additional rights to this report or assembly of contents thereof, please contact INFO@PCTEST.COM.

7.4.2 Body SAR Measurements

SAR for body exposure configurations is measured using the 12.2 kbps RMC with the TPC bits all “1s”. The 3G SAR test reduction procedure is applied to other spreading codes and multiple $DPDCH_n$ configurations supported by the handset with 12.2 kbps RMC as the primary mode. Otherwise, SAR is measured using an applicable RMC configuration with the corresponding spreading code or $DPDCH_n$, for the highest reported SAR configuration in 12.2 kbps RMC.

7.4.3 SAR Measurements with Rel 5 HSDPA

The 3G SAR test reduction procedure is applied to HSDPA body configurations with 12.2 kbps RMC as the primary mode. Otherwise, Body SAR for HSDPA is measured using an FRC with H-Set 1 in Sub-test 1 and a 12.2 kbps RMC configured in Test Loop Mode 1, for the highest reported SAR configuration in 12.2 kbps RMC without HSDPA. Handsets with both HSDPA and HSUPA are tested according to Release 6 HSPA test procedures.

7.4.4 SAR Measurements with Rel 6 HSUPA

The 3G SAR test reduction procedure is applied to HSPA (HSUPA/HSDPA with RMC) body configurations with 12.2 kbps RMC as the primary mode. Otherwise, Body SAR for HSPA is measured with E-DCH Sub-test 5, using H-Set 1 and QPSK for FRC and a 12.2 kbps RMC configured in Test Loop Mode 1 and power control algorithm 2, according to the highest reported body SAR configuration in 12.2 kbps RMC without HSPA.

When VOIP applies to head exposure, the 3G SAR test reduction procedure is applied with 12.2 kbps RMC as the primary mode; otherwise, the same HSPA configuration used for body SAR measurements are applied to head exposure testing.

7.5 SAR Measurement Conditions for LTE

LTE modes are tested according to FCC KDB 941225 D05v02r04 publication. Establishing connections with base station simulators ensure a consistent means for testing SAR and are recommended for evaluating SAR [4]. The R&S CMW500 or Anritsu MT8820C simulators are used for LTE output power measurements and SAR testing. Closed loop power control was used so the UE transmits with maximum output power during SAR testing. SAR tests were performed with the same number of RB and RB offsets transmitting on all TTI frames (maximum TTI).

7.5.1 Spectrum Plots for RB Configurations

A properly configured base station simulator was used for SAR tests and power measurements. Therefore, spectrum plots for RB configurations were not required to be included in this report.

7.5.2 MPR

MPR is permanently implemented for this device by the manufacturer. The specific manufacturer target MPR is indicated alongside the SAR results. MPR is enabled for this device, according to 3GPP TS36.101 Section 6.2.3 – 6.2.5 under Table 6.2.3-1.

7.5.3 A-MPR

A-MPR (Additional MPR) has been disabled for all SAR tests by setting NS=01 on the base station simulator.

© 2020 PCTEST All rights reserved. Unless otherwise specified, no part of this report may be reproduced or utilized in any part, form or by any means, electronic or mechanical, including photocopying and microfilm, without permission in writing from PCTEST. If you have any questions about this international copyright or have an enquiry about obtaining additional rights to this report or assembly of contents thereof, please contact INFO@PCTEST.COM.

7.5.4 Required RB Size and RB Offsets for SAR Testing

According to FCC KDB 941225 D05v02r04:

a. Per Section 5.2.1, SAR is required for QPSK 1 RB Allocation for the largest bandwidth
   i. The required channel and offset combination with the highest maximum output power is required for SAR.
   ii. When the reported SAR is ≤ 0.8 W/kg, testing of the remaining RB offset configurations and required test channels is not required. Otherwise, SAR is required for the remaining required test channels using the RB offset configuration with highest output power for that channel.
   iii. When the reported SAR for a required test channel is > 1.45 W/kg, SAR is required for all RB offset configurations for that channel.
b. Per Section 5.2.2, SAR is required for 50% RB allocation using the largest bandwidth following the same procedures outlined in Section 5.2.1.
c. Per Section 5.2.3, QPSK SAR is not required for the 100% allocation when the highest maximum output power for the 100% allocation is less than the highest maximum output power of the 1 RB and 50% RB allocations and the reported SAR for the 1 RB and 50% RB allocations is < 0.8 W/kg.
d. Per Section 5.2.4 and 5.3, SAR tests for higher order modulations and lower bandwidths configurations are not required when the conducted power of the required test configurations determined by Sections 5.2.1 through 5.2.3 is less than or equal to ½ dB higher than the equivalent configuration using QPSK modulation and when the QPSK SAR for those configurations is <1.45 W/kg.

7.5.5 TDD

LTE TDD testing is performed using the SAR test guidance provided in FCC KDB 941225 D05v02r04. TDD is tested at the highest duty factor using UL-DL configuration 0 with special subframe configuration 6 and applying the FDD LTE procedures in KDB 941225 D05v02r04. SAR testing is performed using the extended cyclic prefix listed in 3GPP TS 36.211 Section 4.

7.5.6 Downlink Only Carrier Aggregation

Conducted power measurements with LTE Carrier Aggregation (CA) (downlink only) active are made in accordance to KDB Publication 941225 D05Av01r02. The RRC connection is only handled by one cell, the primary component carrier (PCC) for downlink and uplink communications. After making a data connection to the PCC, the UE device adds secondary component carrier(s) (SCC) on the downlink only. All uplink communications and acknowledgements remain identical to specifications when downlink carrier aggregation is inactive on the PCC. Additional conducted output powers are measured with the downlink carrier aggregation active for the configuration with highest measured maximum conducted power with downlink carrier aggregation inactive measured among the channel bandwidth, modulation, and RB combinations in each frequency band. Per FCC KDB Publication 941225 D05Av01r02, no SAR measurements are required for downlink only carrier aggregation configurations when the average output power with downlink only carrier aggregation active is not more than 0.25 dB higher than the average output power with downlink only carrier aggregation inactive.

7.6 SAR Testing with 802.11 Transmitters

The normal network operating configurations of 802.11 transmitters are not suitable for SAR measurements. Unpredictable fluctuations in network traffic and antenna diversity conditions can introduce undesirable variations

© 2020 PCTEST All rights reserved. Unless otherwise specified, no part of this report may be reproduced or utilized in any part, form or by any means, electronic or mechanical, including photocopying and microfilm, without permission in writing from PCTEST. If you have any questions about this international copyright or have an enquiry about obtaining additional rights to this report or assembly of contents thereof, please contact INFO@PCTEST.COM.

in SAR results. The SAR for these devices should be measured using chipset based test mode software to ensure the results are consistent and reliable. See KDB Publication 248227 D01v02r02 for more details.

7.6.1 General Device Setup

Chipset based test mode software is hardware dependent and generally varies among manufacturers. The device operating parameters established in test mode for SAR measurements must be identical to those programmed in production units, including output power levels, amplifier gain settings and other RF performance tuning parameters.

A periodic duty factor is required for current generation SAR systems to measure SAR. When 802.11 frame gaps are accounted for in the transmission, a maximum transmission duty factor of 92 - 96% is typically achievable in most test mode configurations. A minimum transmission duty factor of 85% is required to avoid certain hardware and device implementation issues related to wide range SAR scaling. The reported SAR is scaled to 100% transmission duty factor to determine compliance at the maximum tune-up tolerance limit.

7.6.2 U-NII-1 and U-NII-2A

For devices that operate in both U-NII-1 and U-NII-2A bands, when the same maximum output power is specified for both bands, SAR measurement using OFDM SAR test procedures is not required for U-NII-1 unless the highest reported SAR for U-NII-2A is > 1.2 W/kg. When different maximum output powers are specified for the bands, SAR measurement for the U-NII band with the lower maximum output power is not required unless the highest reported SAR for the U-NII band with the higher maximum output power, adjusted by the ratio of lower to higher specified maximum output power for the two bands, is > 1.2 W/kg. When 10g SAR measurement is considered, a factor of 2.5 is applied to the thresholds above.

7.6.3 U-NII-2C and U-NII-3

The frequency range covered by U-NII-2C and U-NII-3 is 380 MHz (5.47 – 5.85 GHz), which requires a minimum of at least two SAR probe calibration frequency points to support SAR measurements. When Terminal Doppler Weather Radar (TDWR) restriction applies, the channels at 5.60 – 5.65 GHz in U-NII-2C band must be disabled with acceptable mechanisms and documented in the equipment certification. Unless band gap channels are permanently disabled, SAR must be considered for these channels. Each band is tested independently according to the normally required OFDM SAR measurement and probe calibration frequency points requirements.

7.6.4 2.4 GHz SAR Test Requirements

SAR is measured for 2.4 GHz 802.11b DSSS using either the fixed test position or, when applicable, the initial test position procedure. SAR test reduction is determined according to the following:

1) When the reported SAR of the highest measured maximum output power channel for the exposure configuration is ≤ 0.8 W/kg, no further SAR testing is required for 802.11b DSSS in that exposure configuration.

2) When the reported SAR is > 0.8 W/kg, SAR is required for that position using the next highest measured output power channel. When any reported SAR is > 1.2 W/kg, SAR is required for the third channel; i.e., all channels require testing.

2.4 GHz 802.11 g/n OFDM are additionally evaluated for SAR if the highest reported SAR for 802.11b, adjusted by the ratio of the OFDM to DSSS specified maximum output power, is > 1.2 W/kg. When SAR is required for OFDM modes in 2.4 GHz band, the Initial Test Configuration Procedures should be followed. When 10g SAR measurement is considered, a factor of 2.5 is applied to the thresholds above.

© 2020 PCTEST All rights reserved. Unless otherwise specified, no part of this report may be reproduced or utilized in any part, form or by any means, electronic or mechanical, including photocopying and microfilm, without permission in writing from PCTEST. If you have any questions about this international copyright or have an enquiry about obtaining additional rights to this report or assembly of contents thereof, please contact INFO@PCTEST.COM.

7.6.5 OFDM Transmission Mode and SAR Test Channel Selection

When the same maximum output power was specified for multiple OFDM transmission mode configurations in a frequency band or aggregated band, SAR is measured using the configuration with the largest channel bandwidth, lowest order modulation and lowest data rate. When the maximum output power of a channel is the same for equivalent OFDM configurations; for example, 802.11a, 802.11n and 802.11ac or 802.11g and 802.11n with the same channel bandwidth, modulation and data rate etc., the lower order 802.11 mode i.e., 802.11a, then 802.11n and 802.11ac or 802.11g then 802.11n, is used for SAR measurement. When the maximum output power are the same for multiple test channels, either according to the default or additional power measurement requirements, SAR is measured using the channel closest to the middle of the frequency band or aggregated band. When there are multiple channels with the same maximum output power, SAR is measured using the higher number channel.

7.6.6 Initial Test Configuration Procedure

For OFDM, an initial test configuration is determined for each frequency band and aggregated band, according to the transmission mode with the highest maximum output power specified for SAR measurements. When the same maximum output power is specified for multiple OFDM transmission mode configurations in a frequency band or aggregated band, SAR is measured using the configuration(s) with the largest channel bandwidth, lowest order modulation, lowest data rate and lowest order IEEE 802.11 mode. The channel of the transmission mode with the highest average RF output conducted power will be the initial test configuration.

When the reported SAR is ≤ 0.8 W/kg, no additional measurements on other test channels are required. Otherwise, SAR is evaluated using the subsequent highest average RF output channel until the reported SAR result is ≤ 1.2 W/kg or all channels are measured. When there are multiple untested channels having the same subsequent highest average RF output power, the channel with higher frequency from the lowest 802.11 mode is considered for SAR measurements (See Section 7.6.5). When 10g SAR measurement is considered, a factor of 2.5 is applied to the thresholds above.

7.6.7 Subsequent Test Configuration Procedures

For OFDM configurations in each frequency band and aggregated band, SAR is evaluated for initial test configuration using the fixed test position or the initial test position procedure. When the highest reported SAR (for the initial test configuration), adjusted by the ratio of the specified maximum output power of the subsequent test configuration to initial test configuration, is ≤ 1.2 W/kg, no additional SAR tests for the subsequent test configurations are required. When 10g SAR measurement is considered, a factor of 2.5 is applied to the thresholds above.

7.6.8 MIMO SAR considerations

Per KDB Publication 248227 D01v02r02, the simultaneous SAR provisions in KDB Publication 447498 D01v06 should be applied to determine simultaneous transmission SAR test exclusion for WIFI MIMO. If the sum of 1g single transmission chain SAR measurements is <1.6 W/kg, no additional SAR measurements for MIMO are required. Alternatively, SAR for MIMO can be measured with all antennas transmitting simultaneously at the specified maximum output power of MIMO operation. When 10g SAR measurement is considered, a factor of 2.5 is applied to the thresholds above.

© 2020 PCTEST All rights reserved. Unless otherwise specified, no part of this report may be reproduced or utilized in any part, form or by any means, electronic or mechanical, including photocopying and microfilm, without permission in writing from PCTEST. If you have any questions about this international copyright or have an enquiry about obtaining additional rights to this report or assembly of contents thereof, please contact INFO@PCTEST.COM.

8 RF CONDUCTED POWERS

8.1 UMTS Conducted Powers

Table 8-1
Maximum Conducted Power

Mode	3GPP 34.121 Subtest	Cellular Band [dBm]			AWS Band [dBm]			PCS Band [dBm]			3GPP MPR [dB]
		4132	4183	4233	1312	1412	1513	9262	9400	9538	
WCDMA	12.2 kbps RMC	25.03	25.05	25.13	24.74	24.76	24.69	23.89	24.03	24.15	-
HSDPA	Subtest 1	24.97	25.08	25.20	24.73	24.78	24.75	24.06	24.14	24.18	0
	Subtest 2	24.97	25.07	25.19	24.70	24.79	24.77	24.11	24.10	24.05	0
	Subtest 3	24.53	24.68	24.70	24.25	24.30	24.29	23.57	23.67	23.70	0.5
	Subtest 4	24.51	24.63	24.69	24.31	24.28	24.32	23.58	23.65	23.70	0.5
HSUPA	Subtest 1	24.44	24.05	24.25	23.94	23.98	24.00	23.40	23.46	23.49	0
	Subtest 2	23.15	23.16	23.20	23.02	23.08	23.06	22.46	22.50	22.56	2
	Subtest 3	24.08	24.16	24.19	24.00	24.05	24.06	23.42	23.50	23.43	1
	Subtest 4	23.10	23.18	23.19	23.02	23.07	23.09	22.46	22.53	22.53	2
	Subtest 5	25.03	24.98	25.17	25.05	25.08	25.07	24.45	24.50	24.54	0

Table 8-2
Reduced Conducted Power

Mode	3GPP 34.121 Subtest	Cellular Band [dBm]			AWS Band [dBm]			PCS Band [dBm]			3GPP MPR [dB]
		4132	4183	4233	1312	1412	1513	9262	9400	9538	
WCDMA	12.2 kbps RMC	18.70	18.66	18.68	12.64	12.65	12.58	11.45	11.57	11.54	-
HSDPA	Subtest 1	18.52	18.59	18.70	12.47	12.52	12.48	11.36	11.43	11.44	0
	Subtest 2	18.54	18.62	18.69	12.47	12.50	12.50	11.34	11.42	11.43	0
	Subtest 3	18.05	18.14	18.27	12.01	12.03	12.02	10.89	10.96	10.97	0.5
	Subtest 4	18.05	18.13	18.26	12.00	12.04	12.00	10.88	10.95	10.96	0.5
HSUPA	Subtest 1	17.57	17.66	17.85	11.20	11.22	11.25	10.20	10.22	10.24	0
	Subtest 2	16.59	16.58	16.77	10.21	10.26	10.22	9.14	9.18	9.20	2
	Subtest 3	17.56	17.56	17.79	11.52	11.54	11.55	10.40	10.46	10.48	1
	Subtest 4	16.58	16.67	16.78	10.54	10.57	10.55	9.43	9.50	9.50	2
	Subtest 5	18.52	18.62	18.70	12.47	12.51	12.50	11.39	11.44	11.44	0

This device does not support DC-HSDPA.

Figure 8-1
Power Measurement Setup

© 2020 PCTEST All rights reserved. Unless otherwise specified, no part of this report may be reproduced or utilized in any part, form or by any means, electronic or mechanical, including photocopying and microfilm, without permission in writing from PCTEST. If you have any questions about this international copyright or have an enquiry about obtaining additional rights to this report or assembly of contents thereof, please contact INFO@PCTEST.COM.

8.2 LTE Conducted Powers

8.2.1 LTE Band 71

Table 8-3
LTE Band 71 Max Conducted Powers - 20 MHz Bandwidth

LTE Band 71 20 MHz Bandwidth					
Modulation	**RB Size**	**RB Offset**	**Mid Channel 133297 (680.5 MHz) Conducted Power [dBm]**	**MPR Allowed per 3GPP [dB]**	**MPR [dB]**
QPSK	1	0	**24.94**	0	0
	1	50	24.26		0
	1	99	24.78		0
	50	0	**23.75**	0-1	1
	50	25	23.56		1
	50	50	23.66		1
	100	0	23.66		1
16QAM	1	0	24.19	0-1	1
	1	50	24.05		1
	1	99	24.16		1
	50	0	22.74	0-2	2
	50	25	22.54		2
	50	50	22.69		2
	100	0	22.64		2
64QAM	1	0	23.12	0-2	2
	1	50	22.79		2
	1	99	23.18		2
	50	0	22.01	0-3	3
	50	25	21.72		3
	50	50	21.82		3
	100	0	21.84		3

Note: LTE Band 71 at 20 MHz bandwidth does not support three non-overlapping channels. Per KDB Publication 941225 D05v02, when a device supports overlapping channel assignment in a channel bandwidth configuration, the middle channel of the group of overlapping channels should be selected for testing.

© 2020 PCTEST All rights reserved. Unless otherwise specified, no part of this report may be reproduced or utilized in any part, form or by any means, electronic or mechanical, including photocopying and microfilm, without permission in writing from PCTEST. If you have any questions about this international copyright or have an enquiry about obtaining additional rights to this report or assembly of contents thereof, please contact INFO@PCTEST.COM.

Table 8-4
LTE Band 71 Max Conducted Powers - 15 MHz Bandwidth

LTE Band 71 15 MHz Bandwidth					
Modulation	RB Size	RB Offset	Mid Channel 133297 (680.5 MHz) Conducted Power [dBm]	MPR Allowed per 3GPP [dB]	MPR [dB]
QPSK	1	0	25.02	0	0
	1	36	24.66		0
	1	74	24.54		0
	36	0	23.52	0-1	1
	36	18	23.66		1
	36	37	23.60		1
	75	0	23.64		1
16QAM	1	0	23.79	0-1	1
	1	36	23.78		1
	1	74	23.70		1
	36	0	22.79	0-2	2
	36	18	22.69		2
	36	37	22.67		2
	75	0	22.83		2
64QAM	1	0	23.17	0-2	2
	1	36	23.12		2
	1	74	22.92		2
	36	0	21.31	0-3	3
	36	18	21.28		3
	36	37	21.25		3
	75	0	21.25		3

Note: LTE Band 71 at 20 MHz bandwidth does not support three non-overlapping channels. Per KDB Publication 941225 D05v02, when a device supports overlapping channel assignment in a channel bandwidth configuration, the middle channel of the group of overlapping channels should be selected for testing.

Table 8-5
LTE Band 71 Max Conducted Powers - 10 MHz Bandwidth

LTE Band 71 10 MHz Bandwidth							
Modulation	RB Size	RB Offset	Low Channel 133172 (668.0 MHz)	Mid Channel 133297 (680.5 MHz)	High Channel 133422 (693.0 MHz)	MPR Allowed per 3GPP [dB]	MPR [dB]
			Conducted Power [dBm]				
QPSK	1	0	24.89	25.00	25.18	0	0
	1	25	25.20	25.20	25.20		0
	1	49	25.12	24.97	25.12		0
	25	0	24.04	23.78	24.11	0-1	1
	25	12	23.97	23.88	24.01		1
	25	25	24.18	23.76	23.87		1
	50	0	24.20	23.75	23.94		1
16QAM	1	0	23.99	23.86	23.87	0-1	1
	1	25	24.01	23.85	23.85		1
	1	49	23.79	23.72	23.90		1
	25	0	23.10	23.08	23.20	0-2	2
	25	12	23.02	22.99	23.20		2
	25	25	22.94	23.07	23.12		2
	50	0	23.18	22.93	23.19		2
64QAM	1	0	22.66	22.78	22.72	0-2	2
	1	25	22.95	22.85	22.91		2
	1	49	22.57	22.75	22.61		2
	25	0	21.68	21.46	21.69	0-3	3
	25	12	21.68	21.56	21.71		3
	25	25	21.57	21.45	21.57		3
	50	0	21.64	21.50	21.72		3

© 2020 PCTEST All rights reserved. Unless otherwise specified, no part of this report may be reproduced or utilized in any part, form or by any means, electronic or mechanical, including photocopying and microfilm, without permission in writing from PCTEST. If you have any questions about this international copyright or have an enquiry about obtaining additional rights to this report or assembly of contents thereof, please contact INFO@PCTEST.COM.

Table 8-6
LTE Band 71 Max Conducted Powers - 5 MHz Bandwidth

LTE Band 71 5 MHz Bandwidth							
Modulation	RB Size	RB Offset	Low Channel 133147 (665.5 MHz)	Mid Channel 133297 (680.5 MHz)	High Channel 133447 (695.5 MHz)	MPR Allowed per 3GPP [dB]	MPR [dB]
			Conducted Power [dBm]				
QPSK	1	0	24.90	24.99	25.04	0	0
	1	12	24.97	25.12	24.86		0
	1	24	25.00	25.01	24.98		0
	12	0	24.03	23.91	23.85	0-1	1
	12	6	24.06	23.90	23.82		1
	12	13	23.99	23.90	23.83		1
	25	0	24.01	23.79	23.78		1
16QAM	1	0	23.97	23.77	23.82	0-1	1
	1	12	23.97	23.96	23.79		1
	1	24	24.00	23.80	23.88		1
	12	0	23.20	23.15	23.10	0-2	2
	12	6	23.19	23.15	22.98		2
	12	13	23.02	23.10	23.20		2
	25	0	23.12	23.06	22.99		2
64QAM	1	0	22.94	22.69	22.70	0-2	2
	1	12	22.96	22.65	22.62		2
	1	24	22.79	22.60	22.73		2
	12	0	21.89	21.65	21.56	0-3	3
	12	6	21.92	21.67	21.53		3
	12	13	21.80	21.61	21.52		3
	25	0	21.91	21.53	21.46		3

Table 8-7
LTE Band 71 Reduced Conducted Powers - 20 MHz Bandwidth

LTE Band 71 20 MHz Bandwidth					
Modulation	RB Size	RB Offset	Mid Channel 133297 (680.5 MHz) Conducted Power [dBm]	MPR Allowed per 3GPP [dB]	MPR [dB]
QPSK	1	0	**17.51**	0	0
	1	50	16.89		0
	1	99	16.98		0
	50	0	**17.05**	0-1	0
	50	25	16.88		0
	50	50	16.90		0
	100	0	16.94		0
16QAM	1	0	17.48	0-1	0
	1	50	17.11		0
	1	99	17.19		0
	50	0	17.00	0-2	0
	50	25	16.88		0
	50	50	16.82		0
	100	0	16.89		0
64QAM	1	0	17.43	0-2	0
	1	50	17.07		0
	1	99	17.12		0
	50	0	16.99	0-3	0
	50	25	16.88		0
	50	50	16.83		0
	100	0	16.94		0

Note: LTE Band 71 at 20 MHz bandwidth does not support three non-overlapping channels. Per KDB Publication 941225 D05v02, when a device supports overlapping channel assignment in a channel bandwidth configuration, the middle channel of the group of overlapping channels should be selected for testing.

© 2020 PCTEST All rights reserved. Unless otherwise specified, no part of this report may be reproduced or utilized in any part, form or by any means, electronic or mechanical, including photocopying and microfilm, without permission in writing from PCTEST. If you have any questions about this international copyright or have an enquiry about obtaining additional rights to this report or assembly of contents thereof, please contact INFO@PCTEST.COM.

Table 8-8
LTE Band 71 Reduced Conducted Powers - 15 MHz Bandwidth

LTE Band 71 15 MHz Bandwidth					
Modulation	**RB Size**	**RB Offset**	**Mid Channel** **133297** **(680.5 MHz)** **Conducted Power [dBm]**	**MPR Allowed per 3GPP [dB]**	**MPR [dB]**
QPSK	1	0	17.35	0	0
	1	36	17.29		0
	1	74	17.18		0
	36	0	17.25	0-1	0
	36	18	17.23		0
	36	37	17.35		0
	75	0	17.23		0
16QAM	1	0	17.40	0-1	0
	1	36	17.50		0
	1	74	17.27		0
	36	0	17.22	0-2	0
	36	18	17.10		0
	36	37	17.22		0
	75	0	17.28		0
64QAM	1	0	17.45	0-2	0
	1	36	17.47		0
	1	74	17.20		0
	36	0	17.10	0-3	0
	36	18	17.25		0
	36	37	17.29		0
	75	0	17.20		0

Note: LTE Band 71 at 15 MHz bandwidth does not support three non-overlapping channels. Per KDB Publication 941225 D05v02, when a device supports overlapping channel assignment in a channel bandwidth configuration, the middle channel of the group of overlapping channels should be selected for testing.

© 2020 PCTEST All rights reserved. Unless otherwise specified, no part of this report may be reproduced or utilized in any part, form or by any means, electronic or mechanical, including photocopying and microfilm, without permission in writing from PCTEST. If you have any questions about this international copyright or have an enquiry about obtaining additional rights to this report or assembly of contents thereof, please contact INFO@PCTEST.COM.

Table 8-9
LTE Band 71 Reduced Conducted Powers - 10 MHz Bandwidth

LTE Band 71 10 MHz Bandwidth							
Modulation	RB Size	RB Offset	Low Channel 133172 (668.0 MHz)	Mid Channel 133297 (680.5 MHz)	High Channel 133422 (693.0 MHz)	MPR Allowed per 3GPP [dB]	MPR [dB]
			Conducted Power [dBm]				
QPSK	1	0	17.61	17.65	17.36	0	0
	1	25	17.54	17.65	17.40		0
	1	49	17.57	17.59	17.31		0
	25	0	17.55	17.68	17.56	0-1	0
	25	12	17.67	17.66	17.61		0
	25	25	17.51	17.68	17.46		0
	50	0	17.48	17.51	17.55		0
16QAM	1	0	17.63	17.69	17.54	0-1	0
	1	25	17.69	17.70	17.56		0
	1	49	17.68	17.67	17.48		0
	25	0	17.59	17.56	17.57	0-2	0
	25	12	17.62	17.64	17.61		0
	25	25	17.53	17.60	17.51		0
	50	0	17.55	17.54	17.48		0
64QAM	1	0	17.63	17.66	17.60	0-2	0
	1	25	17.33	17.70	17.64		0
	1	49	17.40	17.66	17.54		0
	25	0	17.52	17.54	17.49	0-3	0
	25	12	17.66	17.58	17.47		0
	25	25	17.36	17.56	17.42		0
	50	0	17.48	17.51	17.44		0

Table 8-10
LTE Band 71 Reduced Conducted Powers - 5 MHz Bandwidth

LTE Band 71 5 MHz Bandwidth							
Modulation	RB Size	RB Offset	Low Channel 133147 (665.5 MHz)	Mid Channel 133297 (680.5 MHz)	High Channel 133447 (695.5 MHz)	MPR Allowed per 3GPP [dB]	MPR [dB]
			Conducted Power [dBm]				
QPSK	1	0	17.68	17.43	17.52	0	0
	1	12	17.46	17.46	17.53		0
	1	24	17.42	17.42	17.50		0
	12	0	17.59	17.59	17.50	0-1	0
	12	6	17.69	17.60	17.47		0
	12	13	17.70	17.58	17.48		0
	25	0	17.68	17.51	17.46		0
16QAM	1	0	17.65	17.58	17.70	0-1	0
	1	12	17.70	17.67	17.70		0
	1	24	17.63	17.56	17.68		0
	12	0	17.50	17.58	17.48	0-2	0
	12	6	17.66	17.60	17.53		0
	12	13	17.53	17.55	17.46		0
	25	0	17.47	17.54	17.50		0
64QAM	1	0	17.68	17.70	17.64	0-2	0
	1	12	17.65	17.69	17.69		0
	1	24	17.70	17.68	17.51		0
	12	0	17.59	17.63	17.52	0-3	0
	12	6	17.58	17.66	17.68		0
	12	13	17.66	17.69	17.48		0
	25	0	17.61	17.61	17.54		0

© 2020 PCTEST All rights reserved. Unless otherwise specified, no part of this report may be reproduced or utilized in any part, form or by any means, electronic or mechanical, including photocopying and microfilm, without permission in writing from PCTEST. If you have any questions about this international copyright or have an enquiry about obtaining additional rights to this report or assembly of contents thereof, please contact INFO@PCTEST.COM.

8.2.2 LTE Band 12

Table 8-11
LTE Band 12 Max Conducted Powers - 10 MHz Bandwidth

LTE Band 12 10 MHz Bandwidth					
Modulation	**RB Size**	**RB Offset**	**Mid Channel 23095 (707.5 MHz) Conducted Power [dBm]**	**MPR Allowed per 3GPP [dB]**	**MPR [dB]**
QPSK	1	0	**25.10**	0	0
	1	25	24.88		0
	1	49	25.06		0
	25	0	23.99	0-1	1
	25	12	**24.03**		1
	25	25	24.02		1
	50	0	24.00		1
16QAM	1	0	23.93	0-1	1
	1	25	23.77		1
	1	49	23.83		1
	25	0	23.14	0-2	2
	25	12	23.13		2
	25	25	23.03		2
	50	0	23.01		2
64QAM	1	0	23.18	0-2	2
	1	25	23.02		2
	1	49	23.04		2
	25	0	22.02	0-3	3
	25	12	22.02		3
	25	25	21.94		3
	50	0	22.05		3

Note: LTE Band 12 at 10 MHz bandwidth does not support three non-overlapping channels. Per KDB Publication 941225 D05v02, when a device supports overlapping channel assignment in a channel bandwidth configuration, the middle channel of the group of overlapping channels should be selected for testing.

© 2020 PCTEST All rights reserved. Unless otherwise specified, no part of this report may be reproduced or utilized in any part, form or by any means, electronic or mechanical, including photocopying and microfilm, without permission in writing from PCTEST. If you have any questions about this international copyright or have an enquiry about obtaining additional rights to this report or assembly of contents thereof, please contact INFO@PCTEST.COM.

Table 8-12
LTE Band 12 Max Conducted Powers - 5 MHz Bandwidth

LTE Band 12 5 MHz Bandwidth							
Modulation	RB Size	RB Offset	Low Channel 23035 (701.5 MHz)	Mid Channel 23095 (707.5 MHz)	High Channel 23155 (713.5 MHz)	MPR Allowed per 3GPP [dB]	MPR [dB]
			Conducted Power [dBm]				
QPSK	1	0	24.60	24.79	24.62	0	0
	1	12	24.80	24.76	24.75		0
	1	24	24.68	24.68	24.73		0
	12	0	23.76	23.74	23.87	0-1	1
	12	6	23.77	23.71	23.58		1
	12	13	23.72	23.80	23.78		1
	25	0	23.74	23.81	23.62		1
16QAM	1	0	23.85	24.18	24.02	0-1	1
	1	12	23.91	23.89	23.88		1
	1	24	23.81	23.68	23.85		1
	12	0	22.71	22.81	22.78	0-2	2
	12	6	22.78	22.88	23.00		2
	12	13	22.46	22.80	22.76		2
	25	0	22.76	22.84	22.79		2
64QAM	1	0	23.01	22.32	23.00	0-2	2
	1	12	23.20	23.00	23.09		2
	1	24	23.11	23.01	23.02		2
	12	0	22.11	22.13	22.03	0-3	3
	12	6	22.13	22.18	22.15		3
	12	13	22.05	22.12	22.10		3
	25	0	22.01	22.12	22.08		3

Table 8-13
LTE Band 12 Max Conducted Powers - 3 MHz Bandwidth

LTE Band 12 3 MHz Bandwidth							
Modulation	RB Size	RB Offset	Low Channel 23025 (700.5 MHz)	Mid Channel 23095 (707.5 MHz)	High Channel 23165 (714.5 MHz)	MPR Allowed per 3GPP [dB]	MPR [dB]
			Conducted Power [dBm]				
QPSK	1	0	24.63	24.65	24.71	0	0
	1	7	24.68	24.84	24.86		0
	1	14	24.51	24.69	24.71		0
	8	0	23.64	23.69	23.93	0-1	1
	8	4	23.70	23.81	23.79		1
	8	7	23.66	23.69	23.72		1
	15	0	23.59	23.72	23.58		1
16QAM	1	0	24.07	24.03	23.93	0-1	1
	1	7	23.73	23.64	23.72		1
	1	14	23.75	23.87	23.70		1
	8	0	22.68	22.74	22.80	0-2	2
	8	4	22.74	22.82	22.91		2
	8	7	22.80	22.83	22.91		2
	15	0	22.60	22.71	22.64		2
64QAM	1	0	23.03	23.20	23.10	0-2	2
	1	7	23.09	23.09	23.18		2
	1	14	23.19	23.03	23.18		2
	8	0	22.11	22.13	22.12	0-3	3
	8	4	22.14	22.20	22.17		3
	8	7	22.20	22.17	22.11		3
	15	0	22.14	22.14	22.11		3

© 2020 PCTEST All rights reserved. Unless otherwise specified, no part of this report may be reproduced or utilized in any part, form or by any means, electronic or mechanical, including photocopying and microfilm, without permission in writing from PCTEST. If you have any questions about this international copyright or have an enquiry about obtaining additional rights to this report or assembly of contents thereof, please contact INFO@PCTEST.COM.

Table 8-14
LTE Band 12 Max Conducted Powers – 1.4 MHz Bandwidth

LTE Band 12 1.4 MHz Bandwidth							
Modulation	RB Size	RB Offset	Low Channel 23017 (699.7 MHz)	Mid Channel 23095 (707.5 MHz)	High Channel 23173 (715.3 MHz)	MPR Allowed per 3GPP [dB]	MPR [dB]
			Conducted Power [dBm]				
QPSK	1	0	24.57	24.23	24.42	0	0
	1	2	24.56	24.62	24.55		0
	1	5	24.50	24.62	24.48		0
	3	0	24.43	24.52	24.57		0
	3	2	24.49	24.48	24.69		0
	3	3	24.56	24.56	24.50		0
	6	0	23.61	23.64	23.60	0-1	1
16QAM	1	0	23.73	23.78	23.65	0-1	1
	1	2	23.43	23.70	23.75		1
	1	5	23.56	23.49	23.77		1
	3	0	23.65	23.65	23.65		1
	3	2	23.73	23.77	23.72		1
	3	3	23.61	23.73	23.65		1
	6	0	22.69	22.70	22.59	0-2	2
64QAM	1	0	22.95	22.98	23.06	0-2	2
	1	2	23.13	22.79	23.09		2
	1	5	22.96	23.00	23.06		2
	3	0	22.92	22.94	23.11		2
	3	2	23.04	23.07	23.14		2
	3	3	22.95	23.05	22.95		2
	6	0	21.87	21.90	21.91	0-3	3

Table 8-15
LTE Band 12 Reduced Conducted Powers - 10 MHz Bandwidth

LTE Band 12 10 MHz Bandwidth					
Modulation	RB Size	RB Offset	Mid Channel 23095 (707.5 MHz) Conducted Power [dBm]	MPR Allowed per 3GPP [dB]	MPR [dB]
QPSK	1	0	**18.55**	0	0
	1	25	18.52		0
	1	49	18.53		0
	25	0	18.51	0-1	0
	25	12	**18.54**		0
	25	25	18.50		0
	50	0	18.53		0
16QAM	1	0	18.22	0-1	0
	1	25	18.09		0
	1	49	18.23		0
	25	0	18.60	0-2	0
	25	12	18.62		0
	25	25	18.58		0
	50	0	18.58		0
64QAM	1	0	18.64	0-2	0
	1	25	18.41		0
	1	49	18.52		0
	25	0	18.29	0-3	0
	25	12	18.28		0
	25	25	18.18		0
	50	0	18.20		0

Note: LTE Band 12 at 10 MHz bandwidth does not support three non-overlapping channels. Per KDB Publication 941225 D05v02, when a device supports overlapping channel assignment in a channel bandwidth configuration, the middle channel of the group of overlapping channels should be selected for testing.

© 2020 PCTEST All rights reserved. Unless otherwise specified, no part of this report may be reproduced or utilized in any part, form or by any means, electronic or mechanical, including photocopying and microfilm, without permission in writing from PCTEST. If you have any questions about this international copyright or have an enquiry about obtaining additional rights to this report or assembly of contents thereof, please contact INFO@PCTEST.COM.

Table 8-16
LTE Band 12 Reduced Conducted Powers - 5 MHz Bandwidth

LTE Band 12 5 MHz Bandwidth							
Modulation	RB Size	RB Offset	Low Channel 23035 (701.5 MHz)	Mid Channel 23095 (707.5 MHz)	High Channel 23155 (713.5 MHz)	MPR Allowed per 3GPP [dB]	MPR [dB]
			Conducted Power [dBm]				
QPSK	1	0	18.23	18.44	18.37	0	0
	1	12	18.26	18.44	18.43		0
	1	24	18.21	18.32	18.35		0
	12	0	18.36	18.38	18.33	0-1	0
	12	6	18.34	18.40	18.44		0
	12	13	18.36	18.44	18.42		0
	25	0	18.41	18.45	18.39		0
16QAM	1	0	18.45	18.69	18.60	0-1	0
	1	12	18.44	18.66	18.70		0
	1	24	18.43	18.54	18.65		0
	12	0	18.44	18.39	18.31	0-2	0
	12	6	18.39	18.40	18.39		0
	12	13	18.38	18.43	18.43		0
	25	0	18.47	18.47	18.34		0
64QAM	1	0	18.57	18.70	18.65	0-2	0
	1	12	18.67	18.62	18.69		0
	1	24	18.59	18.69	18.57		0
	12	0	18.40	18.49	18.47	0-3	0
	12	6	18.60	18.52	18.59		0
	12	13	18.53	18.64	18.41		0
	25	0	18.50	18.54	18.52		0

Table 8-17
LTE Band 12 Reduced Conducted Powers - 3 MHz Bandwidth

LTE Band 12 3 MHz Bandwidth							
Modulation	RB Size	RB Offset	Low Channel 23025 (700.5 MHz)	Mid Channel 23095 (707.5 MHz)	High Channel 23165 (714.5 MHz)	MPR Allowed per 3GPP [dB]	MPR [dB]
			Conducted Power [dBm]				
QPSK	1	0	18.35	18.36	18.33	0	0
	1	7	18.46	18.47	18.49		0
	1	14	18.31	18.28	18.36		0
	8	0	18.41	18.40	18.46	0-1	0
	8	4	18.45	18.44	18.45		0
	8	7	18.38	18.39	18.41		0
	15	0	18.45	18.48	18.45		0
16QAM	1	0	18.67	18.63	18.42	0-1	0
	1	7	18.69	18.70	18.62		0
	1	14	18.40	18.58	18.42		0
	8	0	18.51	18.49	18.36	0-2	0
	8	4	18.51	18.48	18.43		0
	8	7	18.44	18.45	18.39		0
	15	0	18.49	18.50	18.44		0
64QAM	1	0	18.62	18.59	18.63	0-2	0
	1	7	18.65	18.70	18.65		0
	1	14	18.64	18.62	18.70		0
	8	0	18.48	18.54	18.56	0-3	0
	8	4	18.56	18.48	18.56		0
	8	7	18.69	18.59	18.65		0
	15	0	18.37	18.56	18.52		0

© 2020 PCTEST All rights reserved. Unless otherwise specified, no part of this report may be reproduced or utilized in any part, form or by any means, electronic or mechanical, including photocopying and microfilm, without permission in writing from PCTEST. If you have any questions about this international copyright or have an enquiry about obtaining additional rights to this report or assembly of contents thereof, please contact INFO@PCTEST.COM.

Table 8-18
LTE Band 12 Reduced Conducted Powers - 1.4 MHz Bandwidth

LTE Band 12 1.4 MHz Bandwidth							
Modulation	RB Size	RB Offset	Low Channel 23017 (699.7 MHz)	Mid Channel 23095 (707.5 MHz)	High Channel 23173 (715.3 MHz)	MPR Allowed per 3GPP [dB]	MPR [dB]
			Conducted Power [dBm]				
QPSK	1	0	18.26	18.40	18.15	0	0
	1	2	18.29	18.45	18.22		0
	1	5	18.26	18.40	18.25		0
	3	0	18.30	18.42	18.31		0
	3	2	18.27	18.35	18.39		0
	3	3	18.30	18.32	18.27		0
	6	0	18.34	18.40	18.30	0-1	0
16QAM	1	0	18.46	18.30	18.50	0-1	0
	1	2	18.45	18.39	18.59		0
	1	5	18.36	18.26	18.56		0
	3	0	18.30	18.43	18.36		0
	3	2	18.28	18.46	18.37		0
	3	3	18.31	18.41	18.27		0
	6	0	18.48	18.57	18.40	0-2	0
64QAM	1	0	18.67	18.55	18.70	0-2	0
	1	2	18.61	18.70	18.67		0
	1	5	18.38	18.50	18.69		0
	3	0	18.47	18.62	18.47		0
	3	2	18.53	18.55	18.56		0
	3	3	18.10	18.61	18.59		0
	6	0	18.55	18.44	18.45	0-3	0

© 2020 PCTEST All rights reserved. Unless otherwise specified, no part of this report may be reproduced or utilized in any part, form or by any means, electronic or mechanical, including photocopying and microfilm, without permission in writing from PCTEST. If you have any questions about this international copyright or have an enquiry about obtaining additional rights to this report or assembly of contents thereof, please contact INFO@PCTEST.COM.

8.2.3 LTE Band 13

Table 8-19
LTE Band 13 Max Conducted Powers - 10 MHz Bandwidth

LTE Band 13 10 MHz Bandwidth					
Modulation	RB Size	RB Offset	Mid Channel 23230 (782.0 MHz) Conducted Power [dBm]	MPR Allowed per 3GPP [dB]	MPR [dB]
QPSK	1	0	**25.19**	0	0
	1	25	25.03		0
	1	49	25.14		0
	25	0	24.02	0-1	1
	25	12	**24.13**		1
	25	25	24.05		1
	50	0	24.03		1
16QAM	1	0	23.96	0-1	1
	1	25	23.85		1
	1	49	23.91		1
	25	0	23.13	0-2	2
	25	12	23.03		2
	25	25	23.16		2
	50	0	23.06		2
64QAM	1	0	23.20	0-2	2
	1	25	23.08		2
	1	49	23.18		2
	25	0	22.20	0-3	3
	25	12	22.12		3
	25	25	22.08		3
	50	0	22.15		3

© 2020 PCTEST All rights reserved. Unless otherwise specified, no part of this report may be reproduced or utilized in any part, form or by any means, electronic or mechanical, including photocopying and microfilm, without permission in writing from PCTEST. If you have any questions about this international copyright or have an enquiry about obtaining additional rights to this report or assembly of contents thereof, please contact INFO@PCTEST.COM.

Table 8-20
LTE Band 13 Max Conducted Powers - 5 MHz Bandwidth

LTE Band 13 5 MHz Bandwidth					
Modulation	**RB Size**	**RB Offset**	**Mid Channel** **23230** **(782.0 MHz)** **Conducted Power [dBm]**	**MPR Allowed per 3GPP [dB]**	**MPR [dB]**
QPSK	1	0	25.20	0	0
	1	12	25.18		0
	1	24	25.13		0
	12	0	23.96	0-1	1
	12	6	24.04		1
	12	13	23.96		1
	25	0	23.91		1
16QAM	1	0	24.05	0-1	1
	1	12	24.15		1
	1	24	24.06		1
	12	0	22.93	0-2	2
	12	6	23.02		2
	12	13	23.00		2
	25	0	23.00		2
64QAM	1	0	23.15	0-2	2
	1	12	23.20		2
	1	24	23.12		2
	12	0	22.05	0-3	3
	12	6	22.16		3
	12	13	22.06		3
	25	0	21.97		3

Note: LTE Band 13 at 5 MHz bandwidth does not support three non-overlapping channels. Per KDB Publication 941225 D05v02, when a device supports overlapping channel assignment in a channel bandwidth configuration, the middle channel of the group of overlapping channels should be selected for testing.

© 2020 PCTEST All rights reserved. Unless otherwise specified, no part of this report may be reproduced or utilized in any part, form or by any means, electronic or mechanical, including photocopying and microfilm, without permission in writing from PCTEST. If you have any questions about this international copyright or have an enquiry about obtaining additional rights to this report or assembly of contents thereof, please contact INFO@PCTEST.COM.

Table 8-21
LTE Band 13 Reduced Conducted Powers - 10 MHz Bandwidth

LTE Band 13 10 MHz Bandwidth					
Modulation	RB Size	RB Offset	Mid Channel 23230 (782.0 MHz) Conducted Power [dBm]	MPR Allowed per 3GPP [dB]	MPR [dB]
QPSK	1	0	**17.20**	0	0
	1	25	17.05		0
	1	49	17.08		0
	25	0	**17.19**	0-1	0
	25	12	17.18		0
	25	25	17.12		0
	50	0	17.18		0
16QAM	1	0	17.20	0-1	0
	1	25	17.17		0
	1	49	17.19		0
	25	0	17.18	0-2	0
	25	12	17.14		0
	25	25	17.12		0
	50	0	17.16		0
64QAM	1	0	17.20	0-2	0
	1	25	17.15		0
	1	49	17.14		0
	25	0	17.20	0-3	0
	25	12	17.19		0
	25	25	17.14		0
	50	0	17.17		0

Table 8-22
LTE Band 13 Reduced Conducted Powers - 5 MHz Bandwidth

LTE Band 13 5 MHz Bandwidth					
Modulation	RB Size	RB Offset	Mid Channel 23230 (782.0 MHz) Conducted Power [dBm]	MPR Allowed per 3GPP [dB]	MPR [dB]
QPSK	1	0	16.96	0	0
	1	12	17.09		0
	1	24	16.90		0
	12	0	17.07	0-1	0
	12	6	17.14		0
	12	13	17.11		0
	25	0	17.07		0
16QAM	1	0	17.19	0-1	0
	1	12	17.20		0
	1	24	17.17		0
	12	0	17.07	0-2	0
	12	6	17.16		0
	12	13	17.11		0
	25	0	17.12		0
64QAM	1	0	17.18	0-2	0
	1	12	17.20		0
	1	24	17.17		0
	12	0	17.11	0-3	0
	12	6	17.18		0
	12	13	17.13		0
	25	0	17.10		0

Note: LTE Band 13 at 5 MHz bandwidth does not support three non-overlapping channels. Per KDB Publication 941225 D05v02, when a device supports overlapping channel assignment in a channel bandwidth configuration, the middle channel of the group of overlapping channels should be selected for testing.

© 2020 PCTEST All rights reserved. Unless otherwise specified, no part of this report may be reproduced or utilized in any part, form or by any means, electronic or mechanical, including photocopying and microfilm, without permission in writing from PCTEST. If you have any questions about this international copyright or have an enquiry about obtaining additional rights to this report or assembly of contents thereof, please contact INFO@PCTEST.COM.

8.2.4 LTE Band 26 (Cell)

Table 8-23
LTE Band 26 (Cell) Max Conducted Powers - 15 MHz Bandwidth

LTE Band 26 (Cell) 15 MHz Bandwidth					
Modulation	**RB Size**	**RB Offset**	**Mid Channel 26865 (831.5 MHz) Conducted Power [dBm]**	**MPR Allowed per 3GPP [dB]**	**MPR [dB]**
QPSK	1	0	**24.92**	0	0
	1	36	24.87		0
	1	74	24.84		0
	36	0	24.06	0-1	1
	36	18	**24.16**		1
	36	37	24.00		1
	75	0	24.01		1
16QAM	1	0	23.86	0-1	1
	1	36	23.82		1
	1	74	23.85		1
	36	0	23.09	0-2	2
	36	18	23.09		2
	36	37	23.07		2
	75	0	23.05		2
64QAM	1	0	23.19	0-2	2
	1	36	23.13		2
	1	74	23.18		2
	36	0	22.20	0-3	3
	36	18	22.20		3
	36	37	22.17		3
	75	0	22.17		3

Note: LTE Band 26 (Cell) at 15 MHz bandwidth does not support three non-overlapping channels. Per KDB Publication 941225 D05v02, when a device supports overlapping channel assignment in a channel bandwidth configuration, the middle channel of the group of overlapping channels should be selected for testing.

© 2020 PCTEST All rights reserved. Unless otherwise specified, no part of this report may be reproduced or utilized in any part, form or by any means, electronic or mechanical, including photocopying and microfilm, without permission in writing from PCTEST. If you have any questions about this international copyright or have an enquiry about obtaining additional rights to this report or assembly of contents thereof, please contact INFO@PCTEST.COM.

Table 8-24
LTE Band 26 (Cell) Max Conducted Powers - 10 MHz Bandwidth

LTE Band 26 (Cell) 10 MHz Bandwidth							
Modulation	RB Size	RB Offset	Low Channel 26740 (819.0 MHz)	Mid Channel 26865 (831.5 MHz)	High Channel 26990 (844.0 MHz)	MPR Allowed per 3GPP [dB]	MPR [dB]
			Conducted Power [dBm]				
QPSK	1	0	24.70	25.13	25.16	0	0
	1	25	24.90	24.95	24.98		0
	1	49	25.20	25.13	24.50		0
	25	0	24.03	24.14	24.17	0-1	1
	25	12	24.00	24.11	24.05		1
	25	25	24.03	24.13	24.03		1
	50	0	24.00	24.10	24.08		1
16QAM	1	0	23.96	24.20	24.20	0-1	1
	1	25	24.12	23.93	24.15		1
	1	49	24.13	24.08	24.16		1
	25	0	23.03	23.17	23.18	0-2	2
	25	12	22.98	23.15	23.01		2
	25	25	23.04	23.14	23.03		2
	50	0	23.04	23.14	23.06		2
64QAM	1	0	23.20	23.20	23.20	0-2	2
	1	25	23.12	23.13	23.13		2
	1	49	23.12	23.20	23.17		2
	25	0	22.18	22.15	22.16	0-3	3
	25	12	22.19	22.19	22.17		3
	25	25	22.08	22.15	22.09		3
	50	0	22.07	22.13	22.16		3

Table 8-25
LTE Band 26 (Cell) Max Conducted Powers - 5 MHz Bandwidth

LTE Band 26 (Cell) 5 MHz Bandwidth							
Modulation	RB Size	RB Offset	Low Channel 26715 (816.5 MHz)	Mid Channel 26865 (831.5 MHz)	High Channel 27015 (846.5 MHz)	MPR Allowed per 3GPP [dB]	MPR [dB]
			Conducted Power [dBm]				
QPSK	1	0	24.99	24.92	24.95	0	0
	1	12	24.72	24.87	24.60		0
	1	24	24.64	24.90	24.94		0
	12	0	24.09	24.20	24.13	0-1	1
	12	6	24.04	24.15	24.09		1
	12	13	23.99	24.09	23.99		1
	25	0	24.03	24.13	24.11		1
16QAM	1	0	23.95	24.19	24.19	0-1	1
	1	12	24.16	24.17	24.19		1
	1	24	23.97	23.92	24.00		1
	12	0	23.04	23.18	23.19	0-2	2
	12	6	23.03	23.20	23.06		2
	12	13	23.07	23.17	23.06		2
	25	0	23.04	23.14	23.06		2
64QAM	1	0	23.16	23.16	23.16	0-2	2
	1	12	23.05	23.06	23.06		2
	1	24	22.94	23.02	22.99		2
	12	0	22.17	22.14	22.15	0-3	3
	12	6	22.05	22.05	22.03		3
	12	13	22.11	22.18	22.12		3
	25	0	22.10	22.16	22.19		3

© 2020 PCTEST All rights reserved. Unless otherwise specified, no part of this report may be reproduced or utilized in any part, form or by any means, electronic or mechanical, including photocopying and microfilm, without permission in writing from PCTEST. If you have any questions about this international copyright or have an enquiry about obtaining additional rights to this report or assembly of contents thereof, please contact INFO@PCTEST.COM.

Table 8-26
LTE Band 26 (Cell) Max Conducted Powers - 3 MHz Bandwidth

LTE Band 26 (Cell) 3 MHz Bandwidth							
Modulation	RB Size	RB Offset	Low Channel 26705 (815.5 MHz)	Mid Channel 26865 (831.5 MHz)	High Channel 27025 (847.5 MHz)	MPR Allowed per 3GPP [dB]	MPR [dB]
			Conducted Power [dBm]				
QPSK	1	0	24.78	24.99	25.06	0	0
	1	7	24.64	24.97	25.00		0
	1	14	24.35	24.82	24.80		0
	8	0	24.01	23.98	24.07	0-1	1
	8	4	24.09	24.17	24.02		1
	8	7	23.86	24.02	24.12		1
	15	0	23.94	24.00	24.10		1
16QAM	1	0	23.61	23.96	24.12	0-1	1
	1	7	24.05	24.00	24.10		1
	1	14	23.74	23.90	24.13		1
	8	0	22.96	23.12	23.10	0-2	2
	8	4	22.97	23.11	23.05		2
	8	7	23.00	23.08	23.01		2
	15	0	22.95	23.02	23.08		2
64QAM	1	0	23.15	23.17	23.20	0-2	2
	1	7	23.05	23.12	23.11		2
	1	14	22.92	23.17	23.15		2
	8	0	22.13	22.18	22.11	0-3	3
	8	4	22.06	22.18	22.13		3
	8	7	22.13	22.16	22.10		3
	15	0	22.14	22.14	22.15		3

Table 8-27
LTE Band 26 (Cell) Max Conducted Powers -1.4 MHz Bandwidth

LTE Band 26 (Cell) 1.4 MHz Bandwidth							
Modulation	RB Size	RB Offset	Low Channel 26697 (814.7 MHz)	Mid Channel 26865 (831.5 MHz)	High Channel 27033 (848.3 MHz)	MPR Allowed per 3GPP [dB]	MPR [dB]
			Conducted Power [dBm]				
QPSK	1	0	24.64	25.04	24.46	0	0
	1	2	24.56	24.89	24.64		0
	1	5	24.27	24.74	24.72		0
	3	0	24.65	24.62	24.71		0
	3	2	24.57	24.65	24.50		0
	3	3	24.42	24.58	24.68		0
	6	0	23.94	24.00	24.10	0-1	1
16QAM	1	0	23.60	23.95	24.11	0-1	1
	1	2	24.07	24.02	24.12		1
	1	5	23.79	23.95	24.18		1
	3	0	23.59	23.75	23.73		1
	3	2	23.65	23.79	23.73		1
	3	3	23.66	23.74	23.67		1
	6	0	22.99	23.06	23.12	0-2	2
64QAM	1	0	22.99	23.01	23.04	0-2	2
	1	2	22.96	23.03	23.02		2
	1	5	22.80	23.05	23.03		2
	3	0	22.93	22.98	22.91		2
	3	2	22.93	23.05	23.00		2
	3	3	22.95	22.98	22.92		2
	6	0	22.15	22.15	22.16	0-3	3

© 2020 PCTEST All rights reserved. Unless otherwise specified, no part of this report may be reproduced or utilized in any part, form or by any means, electronic or mechanical, including photocopying and microfilm, without permission in writing from PCTEST. If you have any questions about this international copyright or have an enquiry about obtaining additional rights to this report or assembly of contents thereof, please contact INFO@PCTEST.COM.

Table 8-28
LTE Band 26 (Cell) Reduced Conducted Powers - 15 MHz Bandwidth

LTE Band 26 (Cell) 15 MHz Bandwidth					
Modulation	RB Size	RB Offset	Mid Channel 26865 (831.5 MHz) Conducted Power [dBm]	MPR Allowed per 3GPP [dB]	MPR [dB]
QPSK	1	0	17.90	0	0
	1	36	17.83		0
	1	74	**17.94**		0
	36	0	17.85	0-1	0
	36	18	17.77		0
	36	37	**17.97**		0
	75	0	17.92		0
16QAM	1	0	17.99	0-1	0
	1	36	18.04		0
	1	74	18.10		0
	36	0	17.90	0-2	0
	36	18	17.86		0
	36	37	17.94		0
	75	0	17.96		0
64QAM	1	0	18.08	0-2	0
	1	36	18.11		0
	1	74	18.07		0
	36	0	17.98	0-3	0
	36	18	17.91		0
	36	37	17.97		0
	75	0	17.96		0

Note: LTE Band 26 (Cell) at 15 MHz bandwidth does not support three non-overlapping channels. Per KDB Publication 941225 D05v02, when a device supports overlapping channel assignment in a channel bandwidth configuration, the middle channel of the group of overlapping channels should be selected for testing.

Table 8-29
LTE Band 26 (Cell) Reduced Conducted Powers - 10 MHz Bandwidth

LTE Band 26 (Cell) 10 MHz Bandwidth							
Modulation	RB Size	RB Offset	Low Channel 26740 (819.0 MHz)	Mid Channel 26865 (831.5 MHz)	High Channel 26990 (844.0 MHz)	MPR Allowed per 3GPP [dB]	MPR [dB]
			Conducted Power [dBm]				
QPSK	1	0	18.03	18.06	18.09	0	0
	1	25	17.75	18.07	17.84		0
	1	49	18.20	18.11	17.93		0
	25	0	18.08	18.07	18.20	0-1	0
	25	12	18.00	18.07	18.18		0
	25	25	17.95	18.15	18.04		0
	50	0	17.99	18.11	18.12		0
16QAM	1	0	18.14	18.13	18.15	0-1	0
	1	25	18.20	18.20	18.20		0
	1	49	18.07	18.12	18.02		0
	25	0	18.04	18.10	18.15	0-2	0
	25	12	17.96	17.98	18.02		0
	25	25	17.99	18.08	18.11		0
	50	0	18.01	18.10	18.07		0
64QAM	1	0	18.09	18.13	18.16	0-2	0
	1	25	18.09	18.14	18.13		0
	1	49	18.19	18.18	18.15		0
	25	0	18.04	18.13	18.19	0-3	0
	25	12	17.95	18.15	17.89		0
	25	25	18.02	18.05	18.03		0
	50	0	17.98	18.10	18.05		0

© 2020 PCTEST All rights reserved. Unless otherwise specified, no part of this report may be reproduced or utilized in any part, form or by any means, electronic or mechanical, including photocopying and microfilm, without permission in writing from PCTEST. If you have any questions about this international copyright or have an enquiry about obtaining additional rights to this report or assembly of contents thereof, please contact INFO@PCTEST.COM.

Table 8-30
LTE Band 26 (Cell) Reduced Conducted Powers - 5 MHz Bandwidth

LTE Band 26 (Cell) 5 MHz Bandwidth							
Modulation	RB Size	RB Offset	Low Channel 26715 (816.5 MHz)	Mid Channel 26865 (831.5 MHz)	High Channel 27015 (846.5 MHz)	MPR Allowed per 3GPP [dB]	MPR [dB]
			Conducted Power [dBm]				
QPSK	1	0	17.97	17.95	18.00	0	0
	1	12	17.81	17.89	17.94		0
	1	24	17.87	17.80	17.86		0
	12	0	17.85	17.96	18.04	0-1	0
	12	6	17.99	17.94	18.10		0
	12	13	17.89	17.90	17.98		0
	25	0	17.92	17.96	17.91		0
16QAM	1	0	18.03	18.10	18.17	0-1	0
	1	12	18.12	18.10	18.04		0
	1	24	18.01	17.99	18.13		0
	12	0	17.90	18.08	18.04	0-2	0
	12	6	17.87	18.07	18.09		0
	12	13	17.90	17.94	17.96		0
	25	0	18.03	17.97	17.99		0
64QAM	1	0	18.08	18.11	18.20	0-2	0
	1	12	18.13	18.14	18.11		0
	1	24	18.04	18.10	17.91		0
	12	0	17.92	18.10	18.09	0-3	0
	12	6	17.98	18.08	18.08		0
	12	13	18.00	18.07	17.95		0
	25	0	17.93	18.07	18.01		0

Table 8-31
LTE Band 26 (Cell) Reduced Conducted Powers - 3 MHz Bandwidth

LTE Band 26 (Cell) 3 MHz Bandwidth							
Modulation	RB Size	RB Offset	Low Channel 26705 (815.5 MHz)	Mid Channel 26865 (831.5 MHz)	High Channel 27025 (847.5 MHz)	MPR Allowed per 3GPP [dB]	MPR [dB]
			Conducted Power [dBm]				
QPSK	1	0	17.81	18.02	17.93	0	0
	1	7	17.91	18.08	17.91		0
	1	14	17.82	18.01	17.82		0
	8	0	17.85	18.10	17.92	0-1	0
	8	4	17.96	18.06	18.01		0
	8	7	17.92	18.08	18.01		0
	15	0	17.97	17.94	17.92		0
16QAM	1	0	17.71	18.08	18.13	0-1	0
	1	7	18.19	18.02	18.20		0
	1	14	18.11	18.10	18.04		0
	8	0	18.00	18.04	17.99	0-2	0
	8	4	18.00	18.16	17.99		0
	8	7	17.97	18.13	17.99		0
	15	0	17.96	18.08	17.98		0
64QAM	1	0	18.17	18.09	18.06	0-2	0
	1	7	18.20	18.19	18.20		0
	1	14	18.01	18.19	18.06		0
	8	0	18.01	18.10	18.02	0-3	0
	8	4	17.90	18.12	18.08		0
	8	7	18.12	18.16	17.98		0
	15	0	17.92	18.14	17.86		0

© 2020 PCTEST All rights reserved. Unless otherwise specified, no part of this report may be reproduced or utilized in any part, form or by any means, electronic or mechanical, including photocopying and microfilm, without permission in writing from PCTEST. If you have any questions about this international copyright or have an enquiry about obtaining additional rights to this report or assembly of contents thereof, please contact INFO@PCTEST.COM.

Table 8-32
LTE Band 26 (Cell) Reduced Conducted Powers - 1.4 MHz Bandwidth

LTE Band 26 (Cell) 1.4 MHz Bandwidth							
Modulation	RB Size	RB Offset	Low Channel 26697 (814.7 MHz)	Mid Channel 26865 (831.5 MHz)	High Channel 27033 (848.3 MHz)	MPR Allowed per 3GPP [dB]	MPR [dB]
			Conducted Power [dBm]				
QPSK	1	0	17.82	17.99	17.92	0	0
	1	2	17.74	18.15	17.82		0
	1	5	17.73	17.99	17.83		0
	3	0	17.80	17.90	17.81		0
	3	2	17.85	17.91	17.80		0
	3	3	17.82	17.94	17.84		0
	6	0	17.83	17.93	17.81	0-1	0
16QAM	1	0	17.52	18.02	17.99	0-1	0
	1	2	17.77	18.20	18.00		0
	1	5	17.95	18.19	18.19		0
	3	0	18.00	18.19	17.92		0
	3	2	18.13	18.04	18.10		0
	3	3	17.97	18.09	17.98		0
	6	0	17.86	17.98	17.87	0-2	0
64QAM	1	0	17.91	18.10	17.90	0-2	0
	1	2	17.94	18.20	18.00		0
	1	5	17.95	18.16	17.94		0
	3	0	17.74	18.19	17.92		0
	3	2	18.06	18.18	18.00		0
	3	3	17.86	18.20	18.05		0
	6	0	17.81	17.98	17.85	0-3	0

© 2020 PCTEST All rights reserved. Unless otherwise specified, no part of this report may be reproduced or utilized in any part, form or by any means, electronic or mechanical, including photocopying and microfilm, without permission in writing from PCTEST. If you have any questions about this international copyright or have an enquiry about obtaining additional rights to this report or assembly of contents thereof, please contact INFO@PCTEST.COM.

8.2.5 LTE Band 66 (AWS)

Table 8-33
LTE Band 66 (AWS) Max Conducted Powers - 20 MHz Bandwidth

LTE Band 66 (AWS) 20 MHz Bandwidth							
Modulation	RB Size	RB Offset	Low Channel 132072 (1720.0 MHz)	Mid Channel 132322 (1745.0 MHz)	High Channel 132572 (1770.0 MHz)	MPR Allowed per 3GPP [dB]	MPR [dB]
			Conducted Power [dBm]				
QPSK	1	0	25.02	**25.16**	24.70	0	0
	1	50	24.88	24.98	24.59		0
	1	99	24.83	25.12	24.73		0
	50	0	23.80	23.86	23.60	0-1	1
	50	25	23.51	**24.15**	23.62		1
	50	50	23.86	23.89	23.57		1
	100	0	23.85	23.87	23.53		1
16QAM	1	0	23.83	23.66	23.53	0-1	1
	1	50	23.75	23.63	23.23		1
	1	99	23.96	24.12	23.75		1
	50	0	22.99	23.01	22.73	0-2	2
	50	25	23.13	22.81	22.73		2
	50	50	23.02	22.97	22.72		2
	100	0	23.02	23.12	22.78		2
64QAM	1	0	23.07	23.08	23.16	0-2	2
	1	50	23.20	23.14	23.05		2
	1	99	23.20	23.20	23.19		2
	50	0	22.11	22.12	22.04	0-3	3
	50	25	22.17	22.19	22.14		3
	50	50	22.20	21.84	22.01		3
	100	0	22.15	22.11	22.02		3

Table 8-34
LTE Band 66 (AWS) Max Conducted Powers - 15 MHz Bandwidth

LTE Band 66 (AWS) 15 MHz Bandwidth							
Modulation	RB Size	RB Offset	Low Channel 132047 (1717.5 MHz)	Mid Channel 132322 (1745.0 MHz)	High Channel 132597 (1772.5 MHz)	MPR Allowed per 3GPP [dB]	MPR [dB]
			Conducted Power [dBm]				
QPSK	1	0	25.04	24.85	24.86	0	0
	1	36	24.97	25.15	25.04		0
	1	74	24.94	24.91	24.87		0
	36	0	23.81	23.93	24.09	0-1	1
	36	18	23.89	24.00	24.16		1
	36	37	23.89	24.02	24.16		1
	75	0	23.76	23.86	24.08		1
16QAM	1	0	23.17	23.71	23.24	0-1	1
	1	36	23.32	23.87	23.45		1
	1	74	23.35	23.71	23.55		1
	36	0	22.80	22.95	23.10	0-2	2
	36	18	22.94	23.13	22.99		2
	36	37	23.08	23.01	23.00		2
	75	0	23.11	22.93	23.10		2
64QAM	1	0	22.98	23.04	23.16	0-2	2
	1	36	23.02	23.07	23.14		2
	1	74	23.04	23.02	23.17		2
	36	0	22.04	21.96	22.09	0-3	3
	36	18	22.11	22.16	22.14		3
	36	37	22.13	22.19	22.10		3
	75	0	22.17	21.99	22.19		3

© 2020 PCTEST All rights reserved. Unless otherwise specified, no part of this report may be reproduced or utilized in any part, form or by any means, electronic or mechanical, including photocopying and microfilm, without permission in writing from PCTEST. If you have any questions about this international copyright or have an enquiry about obtaining additional rights to this report or assembly of contents thereof, please contact INFO@PCTEST.COM.

Table 8-35
LTE Band 66 (AWS) Max Conducted Powers - 10 MHz Bandwidth

LTE Band 66 (AWS) 10 MHz Bandwidth							
Modulation	RB Size	RB Offset	Low Channel 132022 (1715.0 MHz)	Mid Channel 132322 (1745.0 MHz)	High Channel 132622 (1775.0 MHz)	MPR Allowed per 3GPP [dB]	MPR [dB]
			Conducted Power [dBm]				
QPSK	1	0	25.02	25.16	24.70	0	0
	1	25	24.88	24.98	24.95		0
	1	49	24.83	25.12	24.96		0
	25	0	23.80	23.86	23.68	0-1	1
	25	12	23.68	23.95	23.77		1
	25	25	23.86	23.89	23.85		1
	50	0	23.85	23.87	23.89		1
16QAM	1	0	23.83	23.66	23.67	0-1	1
	1	25	23.75	23.63	23.63		1
	1	49	23.96	24.12	23.75		1
	25	0	22.99	23.01	22.73	0-2	2
	25	12	23.13	22.81	22.73		2
	25	25	23.02	22.97	22.72		2
	50	0	23.02	23.12	22.78		2
64QAM	1	0	23.08	23.05	23.02	0-2	2
	1	25	22.97	22.79	22.84		2
	1	49	22.97	22.61	22.88		2
	25	0	22.09	22.11	21.98	0-3	3
	25	12	22.09	22.09	22.10		3
	25	25	22.10	22.09	22.14		3
	50	0	21.96	22.12	22.07		3

Table 8-36
LTE Band 66 (AWS) Max Conducted Powers - 5 MHz Bandwidth

LTE Band 66 (AWS) 5 MHz Bandwidth							
Modulation	RB Size	RB Offset	Low Channel 131997 (1712.5 MHz)	Mid Channel 132322 (1745.0 MHz)	High Channel 132647 (1777.5 MHz)	MPR Allowed per 3GPP [dB]	MPR [dB]
			Conducted Power [dBm]				
QPSK	1	0	24.90	24.89	24.87	0	0
	1	12	24.76	24.80	24.80		0
	1	24	24.67	24.75	24.87		0
	12	0	23.87	23.90	23.98	0-1	1
	12	6	23.83	23.84	24.01		1
	12	13	23.78	23.86	24.05		1
	25	0	23.76	23.78	23.89		1
16QAM	1	0	23.85	23.72	23.68	0-1	1
	1	12	23.81	24.03	23.98		1
	1	24	23.88	23.89	23.87		1
	12	0	22.94	22.99	23.01	0-2	2
	12	6	22.92	22.98	23.10		2
	12	13	22.87	23.03	23.16		2
	25	0	22.79	22.92	23.12		2
64QAM	1	0	23.04	23.08	23.06	0-2	2
	1	12	23.03	22.90	22.91		2
	1	24	22.94	22.88	22.78		2
	12	0	21.82	21.82	22.05	0-3	3
	12	6	21.77	21.83	22.07		3
	12	13	21.72	21.78	22.00		3
	25	0	21.72	21.81	21.99		3

© 2020 PCTEST All rights reserved. Unless otherwise specified, no part of this report may be reproduced or utilized in any part, form or by any means, electronic or mechanical, including photocopying and microfilm, without permission in writing from PCTEST. If you have any questions about this international copyright or have an enquiry about obtaining additional rights to this report or assembly of contents thereof, please contact INFO@PCTEST.COM.

Table 8-37
LTE Band 66 (AWS) Max Conducted Powers - 3 MHz Bandwidth

LTE Band 66 (AWS) 3 MHz Bandwidth							
Modulation	RB Size	RB Offset	Low Channel 131987 (1711.5 MHz)	Mid Channel 132322 (1745.0 MHz)	High Channel 132657 (1778.5 MHz)	MPR Allowed per 3GPP [dB]	MPR [dB]
			Conducted Power [dBm]				
QPSK	1	0	24.71	24.77	25.05	0	0
	1	7	24.75	24.90	24.75		0
	1	14	24.56	24.87	24.98		0
	8	0	23.81	23.87	24.08	0-1	1
	8	4	23.84	23.95	23.89		1
	8	7	23.78	23.86	23.80		1
	15	0	23.84	23.98	23.98		1
16QAM	1	0	23.65	23.66	23.73	0-1	1
	1	7	23.59	23.81	23.66		1
	1	14	23.71	23.67	23.71		1
	8	0	22.79	22.93	22.81	0-2	2
	8	4	22.80	22.89	22.82		2
	8	7	22.76	22.85	22.76		2
	15	0	22.76	22.78	22.71		2
64QAM	1	0	23.11	23.15	22.98	0-2	2
	1	7	23.06	23.12	23.04		2
	1	14	23.11	23.15	22.88		2
	8	0	21.92	22.01	22.03	0-3	3
	8	4	21.92	22.02	22.08		3
	8	7	21.90	21.99	22.11		3
	15	0	21.96	21.99	22.09		3

Table 8-38
LTE Band 66 (AWS) Max Conducted Powers - 1.4 MHz Bandwidth

LTE Band 66 (AWS) 1.4 MHz Bandwidth							
Modulation	RB Size	RB Offset	Low Channel 131979 (1710.7 MHz)	Mid Channel 132322 (1745.0 MHz)	High Channel 132665 (1779.3 MHz)	MPR Allowed per 3GPP [dB]	MPR [dB]
			Conducted Power [dBm]				
QPSK	1	0	24.85	24.69	24.69	0	0
	1	2	24.79	24.83	24.73		0
	1	5	24.84	24.74	24.69		0
	3	0	24.77	24.79	24.74		0
	3	2	24.81	24.79	24.68		0
	3	3	24.72	24.70	24.75		0
	6	0	23.72	23.68	24.06	0-1	1
16QAM	1	0	23.60	23.85	23.77	0-1	1
	1	2	23.78	23.75	23.81		1
	1	5	23.74	23.63	23.84		1
	3	0	23.82	23.89	23.63		1
	3	2	23.84	23.82	23.75		1
	3	3	23.80	23.76	23.65		1
	6	0	22.87	22.62	22.86	0-2	2
64QAM	1	0	23.04	23.10	23.04	0-2	2
	1	2	23.11	23.19	23.04		2
	1	5	23.12	23.13	22.72		2
	3	0	23.14	23.06	23.05		2
	3	2	23.02	23.09	23.00		2
	3	3	22.98	23.02	22.88		2
	6	0	21.96	21.99	22.09	0-3	3

© 2020 PCTEST All rights reserved. Unless otherwise specified, no part of this report may be reproduced or utilized in any part, form or by any means, electronic or mechanical, including photocopying and microfilm, without permission in writing from PCTEST. If you have any questions about this international copyright or have an enquiry about obtaining additional rights to this report or assembly of contents thereof, please contact INFO@PCTEST.COM.

Table 8-39
LTE Band 66 (AWS) Reduced Conducted Powers - 20 MHz Bandwidth

LTE Band 66 (AWS) 20 MHz Bandwidth							
Modulation	RB Size	RB Offset	Low Channel 132072 (1720.0 MHz)	Mid Channel 132322 (1745.0 MHz)	High Channel 132572 (1770.0 MHz)	MPR Allowed per 3GPP [dB]	MPR [dB]
			Conducted Power [dBm]				
QPSK	1	0	12.08	12.22	12.02	0	0
	1	50	12.13	**12.38**	12.08		0
	1	99	12.09	12.36	12.05		0
	50	0	12.11	12.19	11.94	0-1	0
	50	25	12.16	**12.25**	11.88		0
	50	50	12.13	12.24	11.93		0
	100	0	12.18	12.24	11.94		0
16QAM	1	0	11.83	12.51	12.26	0-1	0
	1	50	11.92	12.62	12.32		0
	1	99	11.86	12.66	12.30		0
	50	0	12.09	12.21	11.88	0-2	0
	50	25	12.15	12.31	11.90		0
	50	50	12.12	12.25	11.89		0
	100	0	12.18	12.25	11.89		0
64QAM	1	0	12.54	12.58	12.55	0-2	0
	1	50	12.62	12.64	12.53		0
	1	99	12.58	12.68	12.54		0
	50	0	12.19	12.29	11.94	0-3	0
	50	25	12.21	12.36	11.96		0
	50	50	12.18	12.31	11.95		0
	100	0	12.15	12.33	11.91		0

Table 8-40
LTE Band 66 (AWS) Reduced Conducted Powers - 15 MHz Bandwidth

LTE Band 66 (AWS) 15 MHz Bandwidth							
Modulation	RB Size	RB Offset	Low Channel 132047 (1717.5 MHz)	Mid Channel 132322 (1745.0 MHz)	High Channel 132597 (1772.5 MHz)	MPR Allowed per 3GPP [dB]	MPR [dB]
			Conducted Power [dBm]				
QPSK	1	0	11.87	12.12	11.75	0	0
	1	36	12.03	12.29	11.74		0
	1	74	12.07	12.28	11.72		0
	36	0	12.09	12.11	11.98	0-1	0
	36	18	12.20	12.24	11.96		0
	36	37	12.19	12.19	11.88		0
	75	0	12.08	12.15	11.87		0
16QAM	1	0	12.36	12.12	11.67	0-1	0
	1	36	12.65	12.23	11.79		0
	1	74	12.50	12.26	11.75		0
	36	0	12.13	12.13	11.95	0-2	0
	36	18	12.44	12.22	11.98		0
	36	37	12.26	12.16	11.89		0
	75	0	12.17	12.14	11.86		0
64QAM	1	0	11.84	12.62	11.90	0-2	0
	1	36	11.96	12.10	12.07		0
	1	74	12.00	12.11	12.06		0
	36	0	12.25	12.26	12.04	0-3	0
	36	18	12.48	12.25	12.05		0
	36	37	12.38	12.19	11.96		0
	75	0	12.20	12.32	11.88		0

© 2020 PCTEST All rights reserved. Unless otherwise specified, no part of this report may be reproduced or utilized in any part, form or by any means, electronic or mechanical, including photocopying and microfilm, without permission in writing from PCTEST. If you have any questions about this international copyright or have an enquiry about obtaining additional rights to this report or assembly of contents thereof, please contact INFO@PCTEST.COM.

Table 8-41
LTE Band 66 (AWS) Reduced Conducted Powers - 10 MHz Bandwidth

LTE Band 66 (AWS) 10 MHz Bandwidth							
Modulation	RB Size	RB Offset	Low Channel 132022 (1715.0 MHz)	Mid Channel 132322 (1745.0 MHz)	High Channel 132622 (1775.0 MHz)	MPR Allowed per 3GPP [dB]	MPR [dB]
			Conducted Power [dBm]				
QPSK	1	0	12.12	12.14	12.20	0	0
	1	25	12.34	12.00	11.93		0
	1	49	12.20	12.22	12.21		0
	25	0	12.24	12.21	12.09	0-1	0
	25	12	12.26	12.13	12.16		0
	25	25	12.17	12.21	12.20		0
	50	0	12.21	12.23	12.22		0
16QAM	1	0	12.48	12.50	12.25	0-1	0
	1	25	12.62	12.27	12.07		0
	1	49	12.57	12.03	12.23		0
	25	0	12.42	12.41	12.17	0-2	0
	25	12	12.51	12.38	12.19		0
	25	25	12.38	12.30	12.28		0
	50	0	12.30	12.29	12.20		0
64QAM	1	0	12.11	12.39	12.50	0-2	0
	1	25	11.99	12.25	12.32		0
	1	49	12.17	12.38	12.54		0
	25	0	12.61	12.51	12.12	0-3	0
	25	12	12.53	12.42	12.15		0
	25	25	12.56	12.35	12.21		0
	50	0	12.68	12.40	12.21		0

Table 8-42
LTE Band 66 (AWS) Reduced Conducted Powers - 5 MHz Bandwidth

LTE Band 66 (AWS) 5 MHz Bandwidth							
Modulation	RB Size	RB Offset	Low Channel 131997 (1712.5 MHz)	Mid Channel 132322 (1745.0 MHz)	High Channel 132647 (1777.5 MHz)	MPR Allowed per 3GPP [dB]	MPR [dB]
			Conducted Power [dBm]				
QPSK	1	0	12.18	12.39	11.99	0	0
	1	12	12.14	12.36	11.97		0
	1	24	12.10	12.17	11.93		0
	12	0	12.22	12.16	12.13	0-1	0
	12	6	12.33	12.24	12.13		0
	12	13	12.18	12.00	12.04		0
	25	0	12.24	12.04	12.13		0
16QAM	1	0	12.44	12.25	12.12	0-1	0
	1	12	12.47	12.09	12.21		0
	1	24	12.57	12.06	12.03		0
	12	0	12.61	12.45	12.18	0-2	0
	12	6	12.62	12.48	12.21		0
	12	13	12.54	12.11	12.15		0
	25	0	12.56	12.19	12.11		0
64QAM	1	0	12.40	12.30	12.25	0-2	0
	1	12	12.31	12.61	12.24		0
	1	24	12.25	12.46	12.19		0
	12	0	12.65	12.54	12.19	0-3	0
	12	6	12.59	12.57	12.15		0
	12	13	12.58	12.10	12.10		0
	25	0	12.54	12.37	12.06		0

© 2020 PCTEST All rights reserved. Unless otherwise specified, no part of this report may be reproduced or utilized in any part, form or by any means, electronic or mechanical, including photocopying and microfilm, without permission in writing from PCTEST. If you have any questions about this international copyright or have an enquiry about obtaining additional rights to this report or assembly of contents thereof, please contact INFO@PCTEST.COM.

Table 8-43
LTE Band 66 (AWS) Reduced Conducted Powers - 3 MHz Bandwidth

LTE Band 66 (AWS) 3 MHz Bandwidth							
Modulation	RB Size	RB Offset	Low Channel 131987 (1711.5 MHz)	Mid Channel 132322 (1745.0 MHz)	High Channel 132657 (1778.5 MHz)	MPR Allowed per 3GPP [dB]	MPR [dB]
			Conducted Power [dBm]				
QPSK	1	0	12.34	12.17	11.98	0	0
	1	7	12.08	12.05	12.10		0
	1	14	12.29	11.99	11.91		0
	8	0	12.26	12.17	12.12	0-1	0
	8	4	12.22	12.24	12.17		0
	8	7	12.30	12.02	12.10		0
	15	0	12.28	12.11	12.11		0
16QAM	1	0	12.58	11.99	12.07	0-1	0
	1	7	12.70	11.97	12.15		0
	1	14	12.55	11.81	11.98		0
	8	0	12.66	12.22	12.16	0-2	0
	8	4	12.51	12.24	12.21		0
	8	7	12.65	12.09	12.12		0
	15	0	12.57	12.27	12.19		0
64QAM	1	0	12.12	12.19	12.36	0-2	0
	1	7	12.08	12.39	12.44		0
	1	14	11.99	12.15	12.25		0
	8	0	12.52	12.50	12.17	0-3	0
	8	4	12.54	12.50	12.17		0
	8	7	12.48	12.09	12.16		0
	15	0	12.67	12.51	12.14		0

Table 8-44
LTE Band 66 (AWS) Reduced Conducted Powers - 1.4 MHz Bandwidth

LTE Band 66 (AWS) 1.4 MHz Bandwidth							
Modulation	RB Size	RB Offset	Low Channel 131979 (1710.7 MHz)	Mid Channel 132322 (1745.0 MHz)	High Channel 132665 (1779.3 MHz)	MPR Allowed per 3GPP [dB]	MPR [dB]
			Conducted Power [dBm]				
QPSK	1	0	12.10	12.02	12.10	0	0
	1	2	12.17	12.00	12.14		0
	1	5	12.03	11.93	12.01		0
	3	0	12.15	12.12	12.06		0
	3	2	12.33	12.22	12.08		0
	3	3	12.22	12.07	12.03		0
	6	0	12.16	11.98	12.00	0-1	0
16QAM	1	0	12.47	11.79	11.84	0-1	0
	1	2	12.55	11.94	11.89		0
	1	5	12.48	11.84	11.84		0
	3	0	12.46	12.24	12.27		0
	3	2	12.51	12.33	12.32		0
	3	3	12.48	12.21	12.25		0
	6	0	12.32	12.45	12.25	0-2	0
64QAM	1	0	11.93	12.06	12.28	0-2	0
	1	2	11.97	12.23	12.38		0
	1	5	11.88	12.15	12.23		0
	3	0	12.65	12.27	12.38		0
	3	2	12.62	12.25	12.42		0
	3	3	12.47	12.20	12.35		0
	6	0	12.56	12.23	12.03	0-3	0

© 2020 PCTEST

REV 21.4 M
09/11/2019

© 2020 PCTEST All rights reserved. Unless otherwise specified, no part of this report may be reproduced or utilized in any part, form or by any means, electronic or mechanical, including photocopying and microfilm, without permission in writing from PCTEST. If you have any questions about this international copyright or have an enquiry about obtaining additional rights to this report or assembly of contents thereof, please contact INFO@PCTEST.COM.

8.2.6 LTE Band 25 (PCS)

Table 8-45
LTE Band 25 (PCS) Max Conducted Powers - 20 MHz Bandwidth

LTE Band 25 (PCS) 20 MHz Bandwidth							
Modulation	RB Size	RB Offset	Low Channel 26140 (1860.0 MHz)	Mid Channel 26365 (1882.5 MHz)	High Channel 26590 (1905.0 MHz)	MPR Allowed per 3GPP [dB]	MPR [dB]
			Conducted Power [dBm]				
QPSK	1	0	24.28	24.31	24.54	0	0
	1	50	24.09	24.12	24.25		0
	1	99	24.43	**24.54**	24.45		0
	50	0	23.24	**23.43**	23.24	0-1	1
	50	25	23.18	23.20	23.29		1
	50	50	23.19	23.15	23.40		1
	100	0	23.12	23.31	23.42		1
16QAM	1	0	23.07	23.40	23.67	0-1	1
	1	50	23.05	23.00	23.15		1
	1	99	23.04	23.05	23.33		1
	50	0	22.22	22.45	22.21	0-2	2
	50	25	22.38	22.22	22.22		2
	50	50	22.16	22.13	22.31		2
	100	0	22.24	22.37	22.30		2
64QAM	1	0	22.53	22.50	22.45	0-2	2
	1	50	22.68	22.60	22.61		2
	1	99	22.64	22.70	22.50		2
	50	0	21.64	21.55	21.57	0-3	3
	50	25	21.61	21.64	21.52		3
	50	50	21.70	21.69	21.64		3
	100	0	21.67	21.64	21.59		3

Table 8-46
LTE Band 25 (PCS) Max Conducted Powers - 15 MHz Bandwidth

LTE Band 25 (PCS) 15 MHz Bandwidth							
Modulation	RB Size	RB Offset	Low Channel 26115 (1857.5 MHz)	Mid Channel 26365 (1882.5 MHz)	High Channel 26615 (1907.5 MHz)	MPR Allowed per 3GPP [dB]	MPR [dB]
			Conducted Power [dBm]				
QPSK	1	0	24.64	24.45	24.46	0	0
	1	36	24.57	24.45	24.41		0
	1	74	24.54	24.51	23.99		0
	36	0	23.41	23.53	23.69	0-1	1
	36	18	23.49	23.60	23.33		1
	36	37	23.49	23.62	23.46		1
	75	0	23.36	23.46	23.68		1
16QAM	1	0	22.96	23.31	23.01	0-1	1
	1	36	23.11	23.47	23.25		1
	1	74	23.15	23.31	23.15		1
	36	0	22.40	22.55	22.35	0-2	2
	36	18	22.54	22.31	22.24		2
	36	37	22.47	22.61	22.30		2
	75	0	22.36	22.53	22.38		2
64QAM	1	0	22.36	22.28	22.29	0-2	2
	1	36	22.40	22.39	22.42		2
	1	74	22.61	22.28	22.31		2
	36	0	21.63	21.69	21.70	0-3	3
	36	18	21.57	21.59	21.54		3
	36	37	21.52	21.53	21.67		3
	75	0	21.66	21.59	21.64		3

© 2020 PCTEST All rights reserved. Unless otherwise specified, no part of this report may be reproduced or utilized in any part, form or by any means, electronic or mechanical, including photocopying and microfilm, without permission in writing from PCTEST. If you have any questions about this international copyright or have an enquiry about obtaining additional rights to this report or assembly of contents thereof, please contact INFO@PCTEST.COM.

Table 8-47
LTE Band 25 (PCS) Max Conducted Powers - 10 MHz Bandwidth

LTE Band 25 (PCS) 10 MHz Bandwidth							
Modulation	RB Size	RB Offset	Low Channel 26090 (1855.0 MHz)	Mid Channel 26365 (1882.5 MHz)	High Channel 26640 (1910.0 MHz)	MPR Allowed per 3GPP [dB]	MPR [dB]
			Conducted Power [dBm]				
QPSK	1	0	24.55	24.53	24.24	0	0
	1	25	24.25	24.40	24.51		0
	1	49	24.33	24.50	24.32		0
	25	0	23.38	23.50	23.26	0-1	1
	25	12	23.49	23.54	23.43		1
	25	25	23.39	23.59	23.35		1
	50	0	23.28	23.45	23.29		1
16QAM	1	0	23.25	23.40	23.52	0-1	1
	1	25	23.22	23.70	23.43		1
	1	49	23.29	23.26	23.25		1
	25	0	22.40	22.47	22.36	0-2	2
	25	12	22.50	22.21	22.24		2
	25	25	22.37	22.24	22.25		2
	50	0	22.32	22.38	22.17		2
64QAM	1	0	22.58	22.45	22.67	0-2	2
	1	25	22.56	22.29	22.58		2
	1	49	22.68	22.65	22.54		2
	25	0	21.55	21.51	21.64	0-3	3
	25	12	21.49	21.50	21.62		3
	25	25	21.69	21.48	21.40		3
	50	0	21.40	21.52	21.60		3

Table 8-48
LTE Band 25 (PCS) Max Conducted Powers - 5 MHz Bandwidth

LTE Band 25 (PCS) 5 MHz Bandwidth							
Modulation	RB Size	RB Offset	Low Channel 26065 (1852.5 MHz)	Mid Channel 26365 (1882.5 MHz)	High Channel 26665 (1912.5 MHz)	MPR Allowed per 3GPP [dB]	MPR [dB]
			Conducted Power [dBm]				
QPSK	1	0	24.50	24.49	24.47	0	0
	1	12	24.36	24.40	24.40		0
	1	24	24.27	24.35	24.50		0
	12	0	23.47	23.50	23.54	0-1	1
	12	6	23.43	23.44	23.40		1
	12	13	23.38	23.46	23.65		1
	25	0	23.36	23.50	23.48		1
16QAM	1	0	22.94	23.40	23.28	0-1	1
	1	12	22.79	23.63	23.19		1
	1	24	22.70	23.49	23.00		1
	12	0	22.54	22.59	22.39	0-2	2
	12	6	22.52	22.58	22.61		2
	12	13	22.47	22.63	22.67		2
	25	0	22.39	22.52	22.47		2
64QAM	1	0	22.57	22.59	22.67	0-2	2
	1	12	22.55	22.60	22.61		2
	1	24	22.64	22.58	21.88		2
	12	0	21.52	21.52	21.57	0-3	3
	12	6	21.47	21.53	21.67		3
	12	13	21.42	21.48	21.56		3
	25	0	21.42	21.51	21.69		3

© 2020 PCTEST All rights reserved. Unless otherwise specified, no part of this report may be reproduced or utilized in any part, form or by any means, electronic or mechanical, including photocopying and microfilm, without permission in writing from PCTEST. If you have any questions about this international copyright or have an enquiry about obtaining additional rights to this report or assembly of contents thereof, please contact INFO@PCTEST.COM.

Table 8-49
LTE Band 25 (PCS) Max Conducted Powers - 3 MHz Bandwidth

LTE Band 25 (PCS) 3 MHz Bandwidth							
Modulation	RB Size	RB Offset	Low Channel 26055 (1851.5 MHz)	Mid Channel 26365 (1882.5 MHz)	High Channel 26675 (1913.5 MHz)	MPR Allowed per 3GPP [dB]	MPR [dB]
			Conducted Power [dBm]				
QPSK	1	0	24.21	24.37	24.52	0	0
	1	7	24.35	24.50	24.21		0
	1	14	24.26	24.47	24.35		0
	8	0	23.22	23.27	23.42	0-1	1
	8	4	23.37	23.55	23.47		1
	8	7	23.38	23.46	23.34		1
	15	0	23.44	23.40	23.58		1
16QAM	1	0	23.32	23.26	23.41	0-1	1
	1	7	23.41	23.41	23.31		1
	1	14	23.45	23.27	23.40		1
	8	0	22.39	22.53	22.27	0-2	2
	8	4	22.40	22.49	22.36		2
	8	7	22.36	22.45	22.22		2
	15	0	22.36	22.38	22.39		2
64QAM	1	0	22.39	22.34	22.42	0-2	2
	1	7	22.50	22.24	22.40		2
	1	14	22.25	22.41	22.57		2
	8	0	21.32	21.41	21.65	0-3	3
	8	4	21.42	21.55	21.65		3
	8	7	21.55	21.50	21.60		3
	15	0	21.63	21.59	21.44		3

Table 8-50
LTE Band 25 (PCS) Max Conducted Powers -1.4 MHz Bandwidth

LTE Band 25 (PCS) 1.4 MHz Bandwidth							
Modulation	RB Size	RB Offset	Low Channel 26047 (1850.7 MHz)	Mid Channel 26365 (1882.5 MHz)	High Channel 26683 (1914.3 MHz)	MPR Allowed per 3GPP [dB]	MPR [dB]
			Conducted Power [dBm]				
QPSK	1	0	24.38	24.49	24.31	0	0
	1	2	24.46	24.63	24.36		0
	1	5	24.34	24.54	24.52		0
	3	0	24.57	24.59	24.36		0
	3	2	24.61	24.59	24.43		0
	3	3	24.52	24.50	24.35		0
	6	0	23.52	23.48	23.47	0-1	1
16QAM	1	0	23.47	23.39	23.49	0-1	1
	1	2	23.41	23.46	23.41		1
	1	5	23.50	23.43	23.33		1
	3	0	23.39	23.33	23.43		1
	3	2	23.21	23.32	23.37		1
	3	3	23.22	23.23	23.26		1
	6	0	22.67	22.42	22.37	0-2	2
64QAM	1	0	22.34	22.20	22.34	0-2	2
	1	2	22.51	22.29	22.43		2
	1	5	22.47	22.23	22.49		2
	3	0	22.34	22.56	22.55		2
	3	2	22.45	22.59	22.50		2
	3	3	22.36	22.51	22.57		2
	6	0	21.49	21.60	21.63	0-3	3

© 2020 PCTEST All rights reserved. Unless otherwise specified, no part of this report may be reproduced or utilized in any part, form or by any means, electronic or mechanical, including photocopying and microfilm, without permission in writing from PCTEST. If you have any questions about this international copyright or have an enquiry about obtaining additional rights to this report or assembly of contents thereof, please contact INFO@PCTEST.COM.

Table 8-51
LTE Band 25 (PCS) Reduced Conducted Powers - 20 MHz Bandwidth

LTE Band 25 (PCS) 20 MHz Bandwidth							
Modulation	RB Size	RB Offset	Low Channel 26140 (1860.0 MHz)	Mid Channel 26365 (1882.5 MHz)	High Channel 26590 (1905.0 MHz)	MPR Allowed per 3GPP [dB]	MPR [dB]
			Conducted Power [dBm]				
QPSK	1	0	11.27	11.37	11.60	0	0
	1	50	11.22	11.38	11.62		0
	1	99	11.36	11.41	**11.70**		0
	50	0	11.50	11.60	11.65	0-1	0
	50	25	11.52	11.65	11.62		0
	50	50	11.49	11.68	**11.69**		0
	100	0	11.57	11.64	11.66		0
16QAM	1	0	11.21	11.28	11.67	0-1	0
	1	50	11.16	11.31	11.69		0
	1	99	11.26	11.29	11.70		0
	50	0	11.49	11.61	11.62	0-2	0
	50	25	11.49	11.63	11.64		0
	50	50	11.47	11.60	11.70		0
	100	0	11.54	11.58	11.63		0
64QAM	1	0	11.64	11.64	11.63	0-2	0
	1	50	11.62	11.67	11.68		0
	1	99	11.70	11.65	11.70		0
	50	0	11.47	11.57	11.64	0-3	0
	50	25	11.48	11.65	11.68		0
	50	50	11.46	11.61	11.69		0
	100	0	11.56	11.65	11.70		0

Table 8-52
LTE Band 25 (PCS) Reduced Conducted Powers - 15 MHz Bandwidth

LTE Band 25 (PCS) 15 MHz Bandwidth							
Modulation	RB Size	RB Offset	Low Channel 26115 (1857.5 MHz)	Mid Channel 26365 (1882.5 MHz)	High Channel 26615 (1907.5 MHz)	MPR Allowed per 3GPP [dB]	MPR [dB]
			Conducted Power [dBm]				
QPSK	1	0	11.37	11.42	11.52	0	0
	1	36	11.43	11.49	11.14		0
	1	74	11.47	11.55	11.12		0
	36	0	11.49	11.51	11.69	0-1	0
	36	18	11.60	11.64	11.63		0
	36	37	11.59	11.59	11.48		0
	75	0	11.48	11.55	11.37		0
16QAM	1	0	11.55	11.52	11.45	0-1	0
	1	36	11.36	11.63	11.19		0
	1	74	11.29	11.66	11.15		0
	36	0	11.35	11.53	11.45	0-2	0
	36	18	11.19	11.62	11.38		0
	36	37	11.45	11.56	11.29		0
	75	0	11.57	11.54	11.26		0
64QAM	1	0	11.24	11.43	11.30	0-2	0
	1	36	11.36	11.42	11.47		0
	1	74	11.40	11.50	11.46		0
	36	0	11.56	11.66	11.44	0-3	0
	36	18	11.44	11.65	11.45		0
	36	37	11.56	11.59	11.36		0
	75	0	11.60	11.48	11.28		0

© 2020 PCTEST All rights reserved. Unless otherwise specified, no part of this report may be reproduced or utilized in any part, form or by any means, electronic or mechanical, including photocopying and microfilm, without permission in writing from PCTEST. If you have any questions about this international copyright or have an enquiry about obtaining additional rights to this report or assembly of contents thereof, please contact INFO@PCTEST.COM.

Table 8-53
LTE Band 25 (PCS) Reduced Conducted Powers - 10 MHz Bandwidth

LTE Band 25 (PCS) 10 MHz Bandwidth							
Modulation	RB Size	RB Offset	Low Channel 26090 (1855.0 MHz)	Mid Channel 26365 (1882.5 MHz)	High Channel 26640 (1910.0 MHz)	MPR Allowed per 3GPP [dB]	MPR [dB]
			Conducted Power [dBm]				
QPSK	1	0	11.32	11.34	11.40	0	0
	1	25	11.54	11.20	11.13		0
	1	49	11.40	11.42	11.41		0
	25	0	11.44	11.41	11.29	0-1	0
	25	12	11.46	11.33	11.36		0
	25	25	11.37	11.41	11.40		0
	50	0	11.41	11.43	11.42		0
16QAM	1	0	11.57	11.21	11.45	0-1	0
	1	25	11.38	11.05	11.27		0
	1	49	11.59	11.23	11.43		0
	25	0	11.62	11.61	11.37	0-2	0
	25	12	11.37	11.58	11.39		0
	25	25	11.58	11.50	11.48		0
	50	0	11.50	11.49	11.40		0
64QAM	1	0	11.31	11.59	11.70	0-2	0
	1	25	11.19	11.45	11.52		0
	1	49	11.37	11.58	11.47		0
	25	0	11.48	11.55	11.32	0-3	0
	25	12	11.47	11.62	11.35		0
	25	25	11.46	11.55	11.41		0
	50	0	11.55	11.60	11.41		0

Table 8-54
LTE Band 25 (PCS) Reduced Conducted Powers - 5 MHz Bandwidth

LTE Band 25 (PCS) 5 MHz Bandwidth							
Modulation	RB Size	RB Offset	Low Channel 26065 (1852.5 MHz)	Mid Channel 26365 (1882.5 MHz)	High Channel 26665 (1912.5 MHz)	MPR Allowed per 3GPP [dB]	MPR [dB]
			Conducted Power [dBm]				
QPSK	1	0	11.38	11.39	11.19	0	0
	1	12	11.34	11.28	11.17		0
	1	24	11.30	11.23	11.13		0
	12	0	11.42	11.36	11.33	0-1	0
	12	6	11.53	11.44	11.33		0
	12	13	11.38	11.20	11.24		0
	25	0	11.44	11.24	11.33		0
16QAM	1	0	11.44	11.45	11.32	0-1	0
	1	12	11.65	11.29	11.41		0
	1	24	11.49	11.26	11.23		0
	12	0	11.48	11.65	11.38	0-2	0
	12	6	11.38	11.68	11.41		0
	12	13	11.46	11.31	11.35		0
	25	0	11.35	11.39	11.31		0
64QAM	1	0	11.60	11.33	11.45	0-2	0
	1	12	11.51	11.49	11.44		0
	1	24	11.45	11.50	11.39		0
	12	0	11.58	11.52	11.39	0-3	0
	12	6	11.49	11.48	11.35		0
	12	13	11.38	11.30	11.30		0
	25	0	11.47	11.57	11.26		0

© 2020 PCTEST All rights reserved. Unless otherwise specified, no part of this report may be reproduced or utilized in any part, form or by any means, electronic or mechanical, including photocopying and microfilm, without permission in writing from PCTEST. If you have any questions about this international copyright or have an enquiry about obtaining additional rights to this report or assembly of contents thereof, please contact INFO@PCTEST.COM.

Table 8-55
LTE Band 25 (PCS) Reduced Conducted Powers - 3 MHz Bandwidth

LTE Band 25 (PCS) 3 MHz Bandwidth							
Modulation	RB Size	RB Offset	Low Channel 26055 (1851.5 MHz)	Mid Channel 26365 (1882.5 MHz)	High Channel 26675 (1913.5 MHz)	MPR Allowed per 3GPP [dB]	MPR [dB]
			Conducted Power [dBm]				
QPSK	1	0	11.54	11.37	11.18	0	0
	1	7	11.28	11.25	11.30		0
	1	14	11.49	11.19	11.11		0
	8	0	11.46	11.37	11.32	0-1	0
	8	4	11.42	11.44	11.37		0
	8	7	11.50	11.22	11.30		0
	15	0	11.48	11.31	11.31		0
16QAM	1	0	11.38	11.19	11.27	0-1	0
	1	7	11.50	11.17	11.35		0
	1	14	11.42	11.21	11.18		0
	8	0	11.36	11.42	11.36	0-2	0
	8	4	11.39	11.44	11.41		0
	8	7	11.58	11.29	11.32		0
	15	0	11.57	11.47	11.39		0
64QAM	1	0	11.32	11.39	11.56	0-2	0
	1	7	11.28	11.59	11.64		0
	1	14	11.19	11.35	11.45		0
	8	0	11.40	11.70	11.37	0-3	0
	8	4	11.47	11.70	11.37		0
	8	7	11.68	11.29	11.36		0
	15	0	11.60	11.49	11.34		0

Table 8-56
LTE Band 25 (PCS) Reduced Conducted Powers - 1.4 MHz Bandwidth

LTE Band 25 (PCS) 1.4 MHz Bandwidth							
Modulation	RB Size	RB Offset	Low Channel 26047 (1850.7 MHz)	Mid Channel 26365 (1882.5 MHz)	High Channel 26683 (1914.3 MHz)	MPR Allowed per 3GPP [dB]	MPR [dB]
			Conducted Power [dBm]				
QPSK	1	0	11.30	11.22	11.30	0	0
	1	2	11.37	11.20	11.34		0
	1	5	11.23	11.13	11.21		0
	3	0	11.35	11.32	11.26		0
	3	2	11.53	11.42	11.28		0
	3	3	11.42	11.27	11.23		0
	6	0	11.36	11.18	11.20	0-1	0
16QAM	1	0	11.67	11.31	11.32	0-1	0
	1	2	11.70	11.41	11.29		0
	1	5	11.68	11.24	11.30		0
	3	0	11.66	11.44	11.31		0
	3	2	11.68	11.53	11.52		0
	3	3	11.68	11.41	11.45		0
	6	0	11.52	11.65	11.45	0-2	0
64QAM	1	0	11.13	11.26	11.48	0-2	0
	1	2	11.17	11.43	11.58		0
	1	5	11.08	11.35	11.43		0
	3	0	11.58	11.47	11.58		0
	3	2	11.48	11.45	11.62		0
	3	3	11.67	11.40	11.55		0
	6	0	11.60	11.43	11.23	0-3	0

© 2020 PCTEST All rights reserved. Unless otherwise specified, no part of this report may be reproduced or utilized in any part, form or by any means, electronic or mechanical, including photocopying and microfilm, without permission in writing from PCTEST. If you have any questions about this international copyright or have an enquiry about obtaining additional rights to this report or assembly of contents thereof, please contact INFO@PCTEST.COM.

8.2.7 LTE Band 41

Table 8-57
LTE Band 41 PC3 Max Conducted Powers - 20 MHz Bandwidth

LTE Band 41 20 MHz Bandwidth									
Modulation	RB Size	RB Offset	Low Channel 39750 (2506.0 MHz)	Low-Mid Channel 40185 (2549.5 MHz)	Mid Channel 40620 (2593.0 MHz)	Mid-High Channel 41055 (2636.5 MHz)	High Channel 41490 (2680.0 MHz)	MPR Allowed per 3GPP [dB]	MPR [dB]
			Conducted Power [dBm]						
QPSK	1	0	22.63	23.02	22.62	22.91	22.93	0	0
	1	50	22.80	23.11	23.05	23.11	**23.18**		0
	1	99	22.92	23.16	22.89	23.16	23.12		0
	50	0	22.10	22.05	22.18	22.03	22.16	0-1	1
	50	25	22.11	22.06	**22.19**	22.06	22.03		1
	50	50	22.09	21.89	22.06	22.10	21.89		1
	100	0	21.99	21.88	22.06	22.13	22.00		1
16QAM	1	0	21.99	21.90	21.76	21.80	21.90	0-1	1
	1	50	22.00	21.84	22.00	22.03	21.96		1
	1	99	22.06	21.90	21.98	21.89	21.78		1
	50	0	20.89	21.08	21.09	21.06	20.99	0-2	2
	50	25	20.84	20.89	21.07	21.00	21.06		2
	50	50	20.97	21.10	21.14	21.00	21.16		2
	100	0	21.00	21.06	21.06	21.06	21.03		2
64QAM	1	0	20.63	20.88	20.33	20.54	20.71	0-2	2
	1	50	20.23	20.81	20.60	20.72	20.99		2
	1	99	20.47	21.20	20.36	20.79	20.55		2
	50	0	19.65	20.07	19.77	19.95	20.17	0-3	3
	50	25	19.50	20.14	19.95	20.13	20.20		3
	50	50	19.47	20.11	19.67	20.02	20.05		3
	100	0	19.59	20.18	19.80	20.12	20.12		3

Table 8-58
LTE Band 41 PC3 Max Conducted Powers - 15 MHz Bandwidth

LTE Band 41 15 MHz Bandwidth									
Modulation	RB Size	RB Offset	Low Channel 39750 (2506.0 MHz)	Low-Mid Channel 40185 (2549.5 MHz)	Mid Channel 40620 (2593.0 MHz)	Mid-High Channel 41055 (2636.5 MHz)	High Channel 41490 (2680.0 MHz)	MPR Allowed per 3GPP [dB]	MPR [dB]
			Conducted Power [dBm]						
QPSK	1	0	22.66	22.65	22.54	22.60	22.59	0	0
	1	36	22.73	22.53	22.49	22.87	22.76		0
	1	74	22.79	22.50	22.46	22.80	22.70		0
	36	0	21.83	21.79	21.61	21.81	21.83	0-1	1
	36	18	22.02	21.76	21.76	22.06	21.93		1
	36	37	21.89	21.77	21.80	21.98	21.92		1
	75	0	21.92	21.72	21.63	21.98	21.85		1
16QAM	1	0	21.56	21.84	21.98	21.78	21.34	0-1	1
	1	36	21.63	21.75	21.43	22.01	21.60		1
	1	74	21.81	21.89	21.38	22.01	21.52		1
	36	0	20.88	20.75	20.66	20.95	20.93	0-2	2
	36	18	21.02	20.80	20.78	21.17	21.07		2
	36	37	20.94	20.77	20.85	21.12	21.05		2
	75	0	20.88	20.77	20.60	20.96	20.92		2
64QAM	1	0	20.93	21.11	20.43	21.01	20.70	0-2	2
	1	36	20.98	21.09	20.78	20.97	20.92		2
	1	74	21.10	21.15	20.72	20.93	20.86		2
	36	0	19.66	19.86	19.51	19.81	19.78	0-3	3
	36	18	19.86	19.94	19.65	20.02	19.91		3
	36	37	19.74	19.87	19.68	19.97	19.88		3
	75	0	19.64	19.88	19.47	19.78	19.73		3

© 2020 PCTEST All rights reserved. Unless otherwise specified, no part of this report may be reproduced or utilized in any part, form or by any means, electronic or mechanical, including photocopying and microfilm, without permission in writing from PCTEST. If you have any questions about this international copyright or have an enquiry about obtaining additional rights to this report or assembly of contents thereof, please contact INFO@PCTEST.COM.

Table 8-59
LTE Band 41 PC3 Max Conducted Powers - 10 MHz Bandwidth

LTE Band 41 10 MHz Bandwidth									
Modulation	RB Size	RB Offset	Low Channel 39750 (2506.0 MHz)	Low-Mid Channel 40185 (2549.5 MHz)	Mid Channel 40620 (2593.0 MHz)	Mid-High Channel 41055 (2636.5 MHz)	High Channel 41490 (2680.0 MHz)	MPR Allowed per 3GPP [dB]	MPR [dB]
			Conducted Power [dBm]						
QPSK	1	0	22.44	22.68	22.51	22.64	22.68	0	0
	1	25	22.59	22.47	22.71	22.56	22.66		0
	1	49	22.66	22.63	22.61	22.82	22.67		0
	25	0	21.69	21.78	21.59	21.76	21.69	0-1	1
	25	12	21.70	21.77	21.54	21.75	21.59		1
	25	25	21.63	21.81	21.60	21.83	21.69		1
	50	0	21.61	21.80	21.57	21.79	21.70		1
16QAM	1	0	22.18	21.48	21.46	21.77	21.61	0-1	1
	1	25	21.98	21.67	21.67	21.65	21.36		1
	1	49	21.59	21.48	21.62	22.01	21.86		1
	25	0	20.79	20.71	20.59	20.66	20.69	0-2	2
	25	12	20.87	20.71	20.52	20.68	20.68		2
	25	25	20.74	20.75	20.61	20.82	20.77		2
	50	0	20.77	20.76	20.62	20.81	20.79		2
64QAM	1	0	20.66	20.47	20.45	20.77	20.59	0-2	2
	1	25	20.52	20.65	20.61	20.59	20.74		2
	1	49	20.66	20.44	20.65	20.77	20.83		2
	25	0	19.45	19.71	19.57	19.72	19.66	0-3	3
	25	12	19.52	19.71	19.49	19.69	19.65		3
	25	25	19.54	19.73	19.56	19.78	19.73		3
	50	0	19.76	19.77	19.59	19.75	19.79		3

Table 8-60
LTE Band 41 PC3 Max Conducted Powers - 5 MHz Bandwidth

LTE Band 41 5 MHz Bandwidth									
Modulation	RB Size	RB Offset	Low Channel 39750 (2506.0 MHz)	Low-Mid Channel 40185 (2549.5 MHz)	Mid Channel 40620 (2593.0 MHz)	Mid-High Channel 41055 (2636.5 MHz)	High Channel 41490 (2680.0 MHz)	MPR Allowed per 3GPP [dB]	MPR [dB]
			Conducted Power [dBm]						
QPSK	1	0	22.66	22.51	22.56	22.34	22.43	0	0
	1	12	22.73	22.67	22.63	22.38	22.55		0
	1	24	22.66	22.45	22.46	22.38	22.57		0
	12	0	21.79	21.76	21.48	21.72	21.53	0-1	1
	12	6	21.80	21.82	21.50	21.76	21.61		1
	12	13	21.79	21.77	21.41	21.74	21.60		1
	25	0	21.78	21.74	21.50	21.68	21.55		1
16QAM	1	0	21.76	21.73	21.46	21.66	21.59	0-1	1
	1	12	21.92	21.57	21.54	21.77	21.56		1
	1	24	21.90	21.52	21.46	21.72	21.62		1
	12	0	20.80	20.79	20.52	20.71	20.67	0-2	2
	12	6	20.89	20.75	20.54	20.73	20.71		2
	12	13	20.81	20.71	20.46	20.65	20.63		2
	25	0	20.73	20.76	20.39	20.79	20.55		2
64QAM	1	0	20.47	20.66	20.45	20.68	20.53	0-2	2
	1	12	20.57	20.62	20.49	20.72	20.54		2
	1	24	20.53	20.54	20.45	20.63	20.59		2
	12	0	19.45	19.77	19.52	19.65	19.66	0-3	3
	12	6	19.52	19.76	19.51	19.71	19.70		3
	12	13	19.49	19.71	19.43	19.68	19.62		3
	25	0	19.39	19.72	19.42	19.77	19.54		3

© 2020 PCTEST All rights reserved. Unless otherwise specified, no part of this report may be reproduced or utilized in any part, form or by any means, electronic or mechanical, including photocopying and microfilm, without permission in writing from PCTEST. If you have any questions about this international copyright or have an enquiry about obtaining additional rights to this report or assembly of contents thereof, please contact INFO@PCTEST.COM.

Table 8-61
LTE Band 41 PC2 Max Conducted Powers - 20 MHz Bandwidth

LTE Band 41 20 MHz Bandwidth									
Modulation	RB Size	RB Offset	Low Channel 39750 (2506.0 MHz)	Low-Mid Channel 40185 (2549.5 MHz)	Mid Channel 40620 (2593.0 MHz)	Mid-High Channel 41055 (2636.5 MHz)	High Channel 41490 (2680.0 MHz)	MPR Allowed per 3GPP [dB]	MPR [dB]
			Conducted Power [dBm]						
QPSK	1	0	24.70	24.66	24.72	24.69	24.70	0	0
	1	50	24.95	25.00	**25.09**	25.01	24.89		0
	1	99	24.94	25.03	24.91	24.88	24.81		0
	50	0	24.06	24.03	24.17	24.06	24.10	0-1	1
	50	25	23.98	24.11	**24.18**	24.06	24.13		1
	50	50	23.99	24.14	24.04	24.01	24.06		1
	100	0	24.00	24.09	24.08	24.11	24.03		1
16QAM	1	0	23.66	23.55	23.63	23.78	23.88	0-1	1
	1	50	24.00	24.06	24.10	24.06	24.00		1
	1	99	23.95	23.89	24.03	24.05	24.00		1
	50	0	23.10	23.06	23.16	23.05	23.06	0-2	2
	50	25	23.06	23.04	23.15	23.06	23.15		2
	50	50	22.95	23.08	23.03	23.05	23.04		2
	100	0	22.99	23.11	23.10	23.16	22.98		2
64QAM	1	0	22.76	23.12	22.57	22.72	22.95	0-2	2
	1	50	22.38	23.05	22.92	23.14	23.12		2
	1	99	22.54	23.18	22.40	22.99	22.82		2
	50	0	21.61	22.07	21.65	22.06	22.13	0-3	3
	50	25	21.47	22.17	21.91	22.13	22.11		3
	50	50	21.50	22.12	21.89	22.07	22.08		3
	100	0	21.52	22.12	21.75	22.15	22.10		3

Table 8-62
LTE Band 41 PC2 Max Conducted Powers - 15 MHz Bandwidth

LTE Band 41 15 MHz Bandwidth									
Modulation	RB Size	RB Offset	Low Channel 39750 (2506.0 MHz)	Low-Mid Channel 40185 (2549.5 MHz)	Mid Channel 40620 (2593.0 MHz)	Mid-High Channel 41055 (2636.5 MHz)	High Channel 41490 (2680.0 MHz)	MPR Allowed per 3GPP [dB]	MPR [dB]
			Conducted Power [dBm]						
QPSK	1	0	24.46	24.68	24.82	24.88	25.09	0	0
	1	36	24.61	24.96	25.08	24.99	24.75		0
	1	74	24.59	24.75	25.18	25.11	24.67		0
	36	0	23.49	23.72	23.71	23.88	23.74	0-1	1
	36	18	23.61	23.71	24.11	24.02	23.78		1
	36	37	23.54	23.66	23.78	24.02	23.69		1
	75	0	23.54	23.65	24.11	24.18	23.91		1
16QAM	1	0	23.79	23.90	24.18	23.79	23.72	0-1	1
	1	36	23.96	23.71	23.63	23.71	23.94		1
	1	74	23.96	23.80	23.75	23.80	23.83		1
	36	0	22.67	22.81	22.77	22.66	22.66	0-2	2
	36	18	22.78	22.80	22.71	22.64	22.71		2
	36	37	22.72	22.76	22.68	22.96	22.62		2
	75	0	22.58	22.74	22.71	22.80	22.80		2
64QAM	1	0	22.81	22.71	22.63	22.88	22.74	0-2	2
	1	36	22.94	22.66	22.64	22.96	22.68		2
	1	74	23.00	22.63	22.71	22.98	23.00		2
	36	0	21.68	21.95	21.73	21.63	21.79	0-3	3
	36	18	21.76	21.62	21.63	21.80	21.68		3
	36	37	21.74	21.72	21.67	21.64	21.74		3
	75	0	21.57	21.60	21.94	21.62	21.77		3

© 2020 PCTEST All rights reserved. Unless otherwise specified, no part of this report may be reproduced or utilized in any part, form or by any means, electronic or mechanical, including photocopying and microfilm, without permission in writing from PCTEST. If you have any questions about this international copyright or have an enquiry about obtaining additional rights to this report or assembly of contents thereof, please contact INFO@PCTEST.COM.

Table 8-63
LTE Band 41 PC2 Max Conducted Powers - 10 MHz Bandwidth

LTE Band 41 10 MHz Bandwidth									
Modulation	RB Size	RB Offset	Low Channel 39750 (2506.0 MHz)	Low-Mid Channel 40185 (2549.5 MHz)	Mid Channel 40620 (2593.0 MHz)	Mid-High Channel 41055 (2636.5 MHz)	High Channel 41490 (2680.0 MHz)	MPR Allowed per 3GPP [dB]	MPR [dB]
			Conducted Power [dBm]						
QPSK	1	0	24.75	24.79	24.96	24.79	24.77	0	0
	1	25	24.63	24.60	25.06	24.82	24.71		0
	1	49	24.55	24.75	24.80	24.96	24.93		0
	25	0	23.57	23.90	23.73	23.97	23.87	0-1	1
	25	12	23.63	23.89	23.66	23.95	23.80		1
	25	25	23.70	23.85	23.69	23.96	23.87		1
	50	0	23.56	23.80	23.63	23.91	23.81		1
16QAM	1	0	23.66	24.00	24.01	24.11	24.04	0-1	1
	1	25	23.68	23.88	24.12	24.07	23.96		1
	1	49	23.89	24.10	24.07	24.12	23.87		1
	25	0	22.69	22.84	22.79	22.74	22.91	0-2	2
	25	12	22.71	22.82	22.73	22.81	22.86		2
	25	25	22.78	22.83	22.76	22.93	22.93		2
	50	0	22.68	22.85	22.70	22.94	22.85		2
64QAM	1	0	22.71	22.79	22.72	22.68	22.78	0-2	2
	1	25	22.68	22.77	22.82	22.72	22.78		2
	1	49	22.70	22.82	22.70	22.71	22.94		2
	25	0	21.69	21.81	21.80	21.66	21.67	0-3	3
	25	12	21.89	21.85	21.67	21.66	21.61		3
	25	25	21.85	21.93	21.77	21.72	21.70		3
	50	0	21.74	21.78	21.75	21.67	21.64		3

Table 8-64
LTE Band 41 PC2 Max Conducted Powers - 5 MHz Bandwidth

LTE Band 41 5 MHz Bandwidth									
Modulation	RB Size	RB Offset	Low Channel 39750 (2506.0 MHz)	Low-Mid Channel 40185 (2549.5 MHz)	Mid Channel 40620 (2593.0 MHz)	Mid-High Channel 41055 (2636.5 MHz)	High Channel 41490 (2680.0 MHz)	MPR Allowed per 3GPP [dB]	MPR [dB]
			Conducted Power [dBm]						
QPSK	1	0	24.78	24.90	24.83	24.65	24.96	0	0
	1	12	24.69	24.96	24.87	24.89	24.93		0
	1	24	24.72	24.76	24.62	24.76	24.87		0
	12	0	23.46	23.69	23.71	23.74	23.95	0-1	1
	12	6	23.57	23.74	23.69	23.73	23.73		1
	12	13	23.74	23.64	23.77	23.79	23.80		1
	25	0	23.75	23.69	23.83	23.84	23.75		1
16QAM	1	0	23.95	23.96	24.01	23.82	24.11	0-1	1
	1	12	24.05	24.08	24.03	23.80	24.15		1
	1	24	24.03	23.96	23.92	23.83	24.09		1
	12	0	22.78	22.75	22.78	22.72	22.70	0-2	2
	12	6	22.84	22.78	22.80	22.80	22.64		2
	12	13	22.77	22.64	22.69	22.76	22.68		2
	25	0	22.72	22.75	22.69	22.80	22.60		2
64QAM	1	0	22.91	22.87	22.91	22.70	22.78	0-2	2
	1	12	22.99	23.08	22.93	22.71	23.08		2
	1	24	22.97	22.79	22.85	22.79	23.05		2
	12	0	21.40	21.72	21.44	21.67	21.74	0-3	3
	12	6	21.45	21.69	21.48	21.74	21.66		3
	12	13	21.42	21.65	21.31	21.69	21.95		3
	25	0	21.34	21.69	21.31	21.70	21.61		3

© 2020 PCTEST All rights reserved. Unless otherwise specified, no part of this report may be reproduced or utilized in any part, form or by any means, electronic or mechanical, including photocopying and microfilm, without permission in writing from PCTEST. If you have any questions about this international copyright or have an enquiry about obtaining additional rights to this report or assembly of contents thereof, please contact INFO@PCTEST.COM.

Table 8-65
LTE Band 41 PC3 Reduced Conducted Powers - 20 MHz Bandwidth

LTE Band 41 20 MHz Bandwidth									
Modulation	RB Size	RB Offset	Low Channel 39750 (2506.0 MHz)	Low-Mid Channel 40185 (2549.5 MHz)	Mid Channel 40620 (2593.0 MHz)	Mid-High Channel 41055 (2636.5 MHz)	High Channel 41490 (2680.0 MHz)	MPR Allowed per 3GPP [dB]	MPR [dB]
			Conducted Power [dBm]						
QPSK	1	0	13.04	13.35	13.06	13.01	12.98	0	0
	1	50	12.72	13.17	13.40	13.37	13.22		0
	1	99	12.97	13.49	12.97	**13.50**	12.92		0
	50	0	13.16	13.46	13.43	13.57	13.46	0-1	0
	50	25	13.00	13.47	13.63	13.60	13.50		0
	50	50	12.96	13.56	13.45	**13.70**	13.32		0
	100	0	13.15	13.44	13.38	13.49	13.39		0
16QAM	1	0	13.22	13.56	13.22	13.20	13.25	0-1	0
	1	50	12.89	13.39	13.56	13.67	13.50		0
	1	99	13.11	13.70	13.10	13.35	13.12		0
	50	0	13.26	13.55	13.48	13.62	13.54	0-2	0
	50	25	13.09	13.52	13.66	13.69	13.56		0
	50	50	13.10	13.66	13.52	13.64	13.42		0
	100	0	13.22	13.58	13.47	13.59	13.54		0
64QAM	1	0	12.99	13.22	12.88	12.83	12.87	0-2	0
	1	50	12.63	13.03	13.18	13.32	13.14		0
	1	99	12.84	13.38	12.79	13.06	12.80		0
	50	0	13.31	13.56	13.42	13.61	13.53	0-3	0
	50	25	13.12	13.57	13.65	13.70	13.62		0
	50	50	13.09	13.61	13.48	13.70	13.44		0
	100	0	13.21	13.58	13.43	13.60	13.55		0

Table 8-66
LTE Band 41 PC3 Reduced Conducted Powers - 15 MHz Bandwidth

LTE Band 41 15 MHz Bandwidth									
Modulation	RB Size	RB Offset	Low Channel 39750 (2506.0 MHz)	Low-Mid Channel 40185 (2549.5 MHz)	Mid Channel 40620 (2593.0 MHz)	Mid-High Channel 41055 (2636.5 MHz)	High Channel 41490 (2680.0 MHz)	MPR Allowed per 3GPP [dB]	MPR [dB]
			Conducted Power [dBm]						
QPSK	1	0	13.02	13.53	12.98	13.30	13.01	0	0
	1	36	13.09	13.33	12.96	13.24	13.18		0
	1	74	13.18	13.35	12.99	13.18	13.10		0
	36	0	13.13	13.45	13.05	13.27	13.22	0-1	0
	36	18	13.27	13.47	13.16	13.46	13.39		0
	36	37	13.18	13.42	13.21	13.43	13.36		0
	75	0	13.20	13.43	13.06	13.36	13.26		0
16QAM	1	0	13.31	13.44	13.22	13.36	13.36	0-1	0
	1	36	13.26	13.28	13.13	13.37	13.02		0
	1	74	13.33	13.31	13.01	13.28	12.90		0
	36	0	13.31	13.48	13.19	13.33	13.42	0-2	0
	36	18	13.42	13.54	13.28	13.49	13.52		0
	36	37	13.39	13.47	13.35	13.49	13.51		0
	75	0	13.25	13.47	13.07	13.46	13.32		0
64QAM	1	0	13.22	13.22	12.83	13.12	13.15	0-2	0
	1	36	13.24	13.12	13.17	13.51	13.37		0
	1	74	13.34	13.14	13.13	13.39	13.22		0
	36	0	13.30	13.53	13.15	13.39	13.35	0-3	0
	36	18	13.44	13.53	13.31	13.54	13.53		0
	36	37	13.32	13.53	13.39	13.52	13.48		0
	75	0	13.32	13.54	13.16	13.48	13.40		0

© 2020 PCTEST All rights reserved. Unless otherwise specified, no part of this report may be reproduced or utilized in any part, form or by any means, electronic or mechanical, including photocopying and microfilm, without permission in writing from PCTEST. If you have any questions about this international copyright or have an enquiry about obtaining additional rights to this report or assembly of contents thereof, please contact INFO@PCTEST.COM.

Table 8-67
LTE Band 41 PC3 Reduced Conducted Powers - 10 MHz Bandwidth

LTE Band 41 10 MHz Bandwidth									
Modulation	RB Size	RB Offset	Low Channel 39750 (2506.0 MHz)	Low-Mid Channel 40185 (2549.5 MHz)	Mid Channel 40620 (2593.0 MHz)	Mid-High Channel 41055 (2636.5 MHz)	High Channel 41490 (2680.0 MHz)	MPR Allowed per 3GPP [dB]	MPR [dB]
			Conducted Power [dBm]						
QPSK	1	0	13.28	13.54	13.35	12.95	13.48	0	0
	1	25	13.13	13.34	13.09	13.24	13.23		0
	1	49	13.25	13.47	13.55	13.66	13.68		0
	25	0	13.23	13.55	13.38	13.59	13.47	0-1	0
	25	12	13.28	13.55	13.34	13.55	13.41		0
	25	25	13.32	13.58	13.41	13.59	13.53		0
	50	0	13.25	13.57	13.37	13.63	13.46		0
16QAM	1	0	13.52	13.51	13.67	13.53	13.40	0-1	0
	1	25	13.41	13.30	13.41	13.31	13.55		0
	1	49	13.51	13.48	13.38	13.21	13.49		0
	25	0	13.32	13.48	13.49	13.52	13.54	0-2	0
	25	12	13.38	13.45	13.41	13.51	13.48		0
	25	25	13.43	13.49	13.48	13.61	13.62		0
	50	0	13.33	13.57	13.45	13.60	13.54		0
64QAM	1	0	12.96	13.26	13.08	13.63	13.20	0-2	0
	1	25	12.79	13.09	12.79	13.42	12.88		0
	1	49	12.96	13.24	13.26	13.48	13.37		0
	25	0	13.35	13.64	13.51	13.53	13.58	0-3	0
	25	12	13.38	13.60	13.46	13.50	13.53		0
	25	25	13.41	13.63	13.51	13.63	13.60		0
	50	0	13.33	13.61	13.45	13.65	13.57		0

Table 8-68
LTE Band 41 PC3 Reduced Conducted Powers - 5 MHz Bandwidth

LTE Band 41 5 MHz Bandwidth									
Modulation	RB Size	RB Offset	Low Channel 39750 (2506.0 MHz)	Low-Mid Channel 40185 (2549.5 MHz)	Mid Channel 40620 (2593.0 MHz)	Mid-High Channel 41055 (2636.5 MHz)	High Channel 41490 (2680.0 MHz)	MPR Allowed per 3GPP [dB]	MPR [dB]
			Conducted Power [dBm]						
QPSK	1	0	13.21	13.37	13.39	13.28	13.41	0	0
	1	12	13.05	13.40	13.10	13.23	13.18		0
	1	24	13.10	13.25	13.11	13.19	13.22		0
	12	0	13.23	13.50	13.25	13.42	13.38	0-1	0
	12	6	13.25	13.49	13.26	13.49	13.41		0
	12	13	13.22	13.46	13.18	13.46	13.32		0
	25	0	13.24	13.50	13.23	13.43	13.37		0
16QAM	1	0	13.28	13.44	13.33	13.26	13.41	0-1	0
	1	12	13.34	13.37	13.31	13.24	13.45		0
	1	24	13.30	13.35	13.22	13.23	13.41		0
	12	0	13.22	13.58	13.37	13.45	13.35	0-2	0
	12	6	13.28	13.55	13.28	13.46	13.41		0
	12	13	13.23	13.52	13.19	13.42	13.35		0
	25	0	13.22	13.58	13.26	13.47	13.37		0
64QAM	1	0	13.50	13.16	13.52	13.25	13.61	0-2	0
	1	12	13.51	13.16	13.49	13.24	13.58		0
	1	24	13.51	13.10	13.44	13.25	13.56		0
	12	0	13.29	13.69	13.35	13.32	13.44	0-3	0
	12	6	13.32	13.45	13.34	13.36	13.45		0
	12	13	13.31	13.46	13.30	13.29	13.45		0
	25	0	13.19	13.56	13.23	13.43	13.35		0

© 2020 PCTEST All rights reserved. Unless otherwise specified, no part of this report may be reproduced or utilized in any part, form or by any means, electronic or mechanical, including photocopying and microfilm, without permission in writing from PCTEST. If you have any questions about this international copyright or have an enquiry about obtaining additional rights to this report or assembly of contents thereof, please contact INFO@PCTEST.COM.

Table 8-69
LTE Band 41 PC2 Reduced Conducted Powers - 20 MHz Bandwidth

LTE Band 41 20 MHz Bandwidth									
Modulation	RB Size	RB Offset	Low Channel 39750 (2506.0 MHz)	Low-Mid Channel 40185 (2549.5 MHz)	Mid Channel 40620 (2593.0 MHz)	Mid-High Channel 41055 (2636.5 MHz)	High Channel 41490 (2680.0 MHz)	MPR Allowed per 3GPP [dB]	MPR [dB]
			Conducted Power [dBm]						
QPSK	1	0	13.07	13.31	12.81	12.99	12.93	0	0
	1	50	12.70	13.15	13.15	13.39	13.10		0
	1	99	12.93	13.45	12.70	**13.56**	12.86		0
	50	0	13.21	13.49	13.27	13.52	13.49	0-1	0
	50	25	13.07	13.53	13.47	13.59	13.52		0
	50	50	13.07	13.59	13.31	**13.65**	13.37		0
	100	0	13.24	13.53	13.31	13.55	13.50		0
16QAM	1	0	13.41	13.64	13.16	13.23	13.29	0-1	0
	1	50	13.05	13.50	13.48	13.70	13.58		0
	1	99	13.27	13.65	13.08	13.41	13.23		0
	50	0	13.32	13.61	13.36	13.58	13.56	0-2	0
	50	25	13.21	13.66	13.58	13.67	13.65		0
	50	50	13.18	13.69	13.39	13.66	13.46		0
	100	0	13.29	13.65	13.37	13.61	13.56		0
64QAM	1	0	13.33	13.53	13.08	13.17	13.16	0-2	0
	1	50	13.01	13.41	13.40	13.63	13.57		0
	1	99	13.16	13.70	12.93	13.31	13.12		0
	50	0	13.36	13.61	13.34	13.55	13.55	0-3	0
	50	25	13.14	13.60	13.54	13.63	13.63		0
	50	50	13.17	13.68	13.38	13.68	13.47		0
	100	0	13.29	13.65	13.37	13.62	13.55		0

Table 8-70
LTE Band 41 PC2 Reduced Conducted Powers - 15 MHz Bandwidth

LTE Band 41 15 MHz Bandwidth									
Modulation	RB Size	RB Offset	Low Channel 39750 (2506.0 MHz)	Low-Mid Channel 40185 (2549.5 MHz)	Mid Channel 40620 (2593.0 MHz)	Mid-High Channel 41055 (2636.5 MHz)	High Channel 41490 (2680.0 MHz)	MPR Allowed per 3GPP [dB]	MPR [dB]
			Conducted Power [dBm]						
QPSK	1	0	13.13	13.56	13.24	13.25	13.20	0	0
	1	36	13.26	13.40	13.24	13.29	13.44		0
	1	74	13.32	13.44	13.24	13.19	13.33		0
	36	0	13.18	13.56	13.22	13.38	13.42	0-1	0
	36	18	13.34	13.68	13.34	13.56	13.53		0
	36	37	13.27	13.66	13.32	13.54	13.52		0
	75	0	13.28	13.64	13.15	13.45	13.47		0
16QAM	1	0	13.45	13.70	13.08	13.57	13.51	0-1	0
	1	36	13.62	13.65	13.58	13.50	13.67		0
	1	74	13.65	13.68	13.45	13.48	13.65		0
	36	0	13.39	13.70	13.29	13.43	13.60	0-2	0
	36	18	13.51	13.64	13.53	13.63	13.47		0
	36	37	13.46	13.62	13.48	13.61	13.69		0
	75	0	13.36	13.69	13.11	13.52	13.48		0
64QAM	1	0	13.66	13.55	13.44	13.60	13.50	0-2	0
	1	36	13.67	13.47	13.38	13.62	13.44		0
	1	74	13.59	13.41	13.37	13.55	13.39		0
	36	0	13.46	13.54	13.21	13.48	13.54	0-3	0
	36	18	13.53	13.60	13.40	13.65	13.47		0
	36	37	13.44	13.55	13.46	13.61	13.41		0
	75	0	13.41	13.47	13.23	13.57	13.56		0

© 2020 PCTEST All rights reserved. Unless otherwise specified, no part of this report may be reproduced or utilized in any part, form or by any means, electronic or mechanical, including photocopying and microfilm, without permission in writing from PCTEST. If you have any questions about this international copyright or have an enquiry about obtaining additional rights to this report or assembly of contents thereof, please contact INFO@PCTEST.COM.

Table 8-71
LTE Band 41 PC2 Reduced Conducted Powers - 10 MHz Bandwidth

LTE Band 41 10 MHz Bandwidth									
Modulation	RB Size	RB Offset	Low Channel 39750 (2506.0 MHz)	Low-Mid Channel 40185 (2549.5 MHz)	Mid Channel 40620 (2593.0 MHz)	Mid-High Channel 41055 (2636.5 MHz)	High Channel 41490 (2680.0 MHz)	MPR Allowed per 3GPP [dB]	MPR [dB]
			Conducted Power [dBm]						
QPSK	1	0	13.12	13.37	13.19	13.42	13.37	0	0
	1	25	12.96	13.19	13.01	13.18	13.13		0
	1	49	13.17	13.35	13.41	13.57	13.56		0
	25	0	13.21	13.54	13.37	13.55	13.42	0-1	0
	25	12	13.23	13.52	13.30	13.50	13.39		0
	25	25	13.31	13.52	13.37	13.56	13.48		0
	50	0	13.22	13.56	13.33	13.62	13.43		0
16QAM	1	0	13.25	13.48	13.28	13.55	13.33	0-1	0
	1	25	13.37	13.50	13.33	13.47	13.21		0
	1	49	13.16	13.47	13.36	13.28	13.39		0
	25	0	13.30	13.53	13.46	13.40	13.55	0-2	0
	25	12	13.38	13.51	13.42	13.49	13.49		0
	25	25	13.42	13.52	13.49	13.58	13.57		0
	50	0	13.30	13.58	13.42	13.62	13.52		0
64QAM	1	0	13.53	13.41	13.59	13.41	13.34	0-2	0
	1	25	13.42	13.51	13.33	13.39	13.43		0
	1	49	13.54	13.46	13.28	13.35	13.39		0
	25	0	13.32	13.61	13.58	13.54	13.62	0-3	0
	25	12	13.40	13.63	13.45	13.48	13.60		0
	25	25	13.43	13.65	13.48	13.60	13.62		0
	50	0	13.33	13.63	13.40	13.69	13.58		0

Table 8-72
LTE Band 41 PC2 Reduced Conducted Powers - 5 MHz Bandwidth

LTE Band 41 5 MHz Bandwidth									
Modulation	RB Size	RB Offset	Low Channel 39750 (2506.0 MHz)	Low-Mid Channel 40185 (2549.5 MHz)	Mid Channel 40620 (2593.0 MHz)	Mid-High Channel 41055 (2636.5 MHz)	High Channel 41490 (2680.0 MHz)	MPR Allowed per 3GPP [dB]	MPR [dB]
			Conducted Power [dBm]						
QPSK	1	0	13.09	13.21	13.17	13.19	13.27	0	0
	1	12	13.10	13.28	13.12	13.20	13.20		0
	1	24	13.09	13.30	13.04	13.18	13.18		0
	12	0	13.29	13.55	13.35	13.53	13.45	0-1	0
	12	6	13.36	13.61	13.36	13.58	13.48		0
	12	13	13.29	13.50	13.31	13.53	13.41		0
	25	0	13.29	13.57	13.30	13.56	13.43		0
16QAM	1	0	13.28	13.32	13.38	13.58	13.29	0-1	0
	1	12	13.38	13.29	13.23	13.56	13.30		0
	1	24	13.28	13.26	13.36	13.55	13.41		0
	12	0	13.34	13.55	13.41	13.56	13.52	0-2	0
	12	6	13.38	13.50	13.42	13.62	13.54		0
	12	13	13.34	13.62	13.33	13.58	13.47		0
	25	0	13.32	13.66	13.36	13.60	13.48		0
64QAM	1	0	13.29	13.64	13.31	13.40	13.22	0-2	0
	1	12	13.31	13.38	13.34	13.42	13.36		0
	1	24	13.31	13.56	13.20	13.34	13.27		0
	12	0	13.41	13.33	13.50	13.44	13.60	0-3	0
	12	6	13.43	13.52	13.43	13.48	13.61		0
	12	13	13.41	13.36	13.39	13.42	13.54		0
	25	0	13.28	13.64	13.30	13.53	13.41		0

© 2020 PCTEST All rights reserved. Unless otherwise specified, no part of this report may be reproduced or utilized in any part, form or by any means, electronic or mechanical, including photocopying and microfilm, without permission in writing from PCTEST. If you have any questions about this international copyright or have an enquiry about obtaining additional rights to this report or assembly of contents thereof, please contact INFO@PCTEST.COM.

8.3 WLAN Conducted Powers

Table 8-73
2.4 GHz WLAN Maximum Average RF Power – Ant 1

2.4GHz Conducted Power [dBm]				
Freq [MHz]	Channel	IEEE Transmission Mode		
		802.11b	802.11g	802.11n
		Average	Average	Average
2412	1	19.34	16.10	15.20
2437	6	19.16	17.56	16.69
2462	11	19.02	16.69	15.21

Table 8-74
2.4 GHz WLAN Maximum Average RF Power – Ant 2

2.4GHz Conducted Power [dBm]				
Freq [MHz]	Channel	IEEE Transmission Mode		
		802.11b	802.11g	802.11n
		Average	Average	Average
2412	1	16.21	13.36	12.10
2437	6	16.34	14.94	13.79
2462	11	16.26	13.81	12.23

© 2020 PCTEST All rights reserved. Unless otherwise specified, no part of this report may be reproduced or utilized in any part, form or by any means, electronic or mechanical, including photocopying and microfilm, without permission in writing from PCTEST. If you have any questions about this international copyright or have an enquiry about obtaining additional rights to this report or assembly of contents thereof, please contact INFO@PCTEST.COM.

Table 8-75
5 GHz WLAN Maximum Average RF Power – Ant 1

5GHz (40MHz) Conducted Power [dBm]			
Freq [MHz]	Channel	IEEE Transmission Mode	
		802.11n	802.11ac
		Average	Average
5190	38	13.87	13.84
5230	46	13.89	13.95
5270	54	13.78	13.82
5310	62	14.27	13.53

5GHz (80MHz) Conducted Power [dBm]		
Freq [MHz]	Channel	IEEE Transmission Mode
		802.11ac
		Average
5530	106	12.15
5610	122	12.52
5690	138	11.62

5GHz (20MHz) Conducted Power [dBm]				
Freq [MHz]	Channel	IEEE Transmission Mode		
		802.11a	802.11n	802.11ac
		Average	Average	Average
5745	149	12.02	11.78	11.80
5785	157	12.54	12.11	12.18
5805	161	12.71	12.52	12.56
5825	165	12.67	12.55	12.53

© 2020 PCTEST All rights reserved. Unless otherwise specified, no part of this report may be reproduced or utilized in any part, form or by any means, electronic or mechanical, including photocopying and microfilm, without permission in writing from PCTEST. If you have any questions about this international copyright or have an enquiry about obtaining additional rights to this report or assembly of contents thereof, please contact INFO@PCTEST.COM.

Table 8-76
5 GHz WLAN Maximum Average RF Power – Ant 2

5GHz (40MHz) Conducted Power [dBm]			
Freq [MHz]	Channel	IEEE Transmission Mode	
		802.11n	802.11ac
		Average	Average
5190	38	14.22	14.22
5230	46	14.39	14.37
5270	54	14.25	14.21
5310	62	14.09	14.06
5GHz (80MHz) Conducted Power [dBm]			
Freq [MHz]	Channel	IEEE Transmission Mode	
		802.11ac	
		Average	
5530	106	13.38	
5610	122	13.44	
5690	138	13.40	
5GHz (40MHz) Conducted Power [dBm]			
Freq [MHz]	Channel	IEEE Transmission Mode	
		802.11n	802.11ac
		Average	Average
5755	151	13.76	13.77
5795	159	13.42	13.46

Table 8-77
5 GHz WLAN Maximum Average RF Power – MIMO

5GHz (40MHz) 802.11n Conducted Power [dBm]				
Freq [MHz]	Channel	ANT1	ANT2	MIMO
5190	38	13.87	14.22	17.06
5230	46	13.89	14.39	17.16
5270	54	13.78	14.25	17.03
5310	62	14.27	14.09	17.19
5GHz (80MHz) 802.11ac Conducted Power [dBm]				
Freq [MHz]	Channel	ANT1	ANT2	MIMO
5530	106	12.15	13.38	15.82
5610	122	12.52	13.44	16.01
5690	138	11.62	13.40	15.61
5GHz (20MHz) 802.11n Conducted Power [dBm]				
Freq [MHz]	Channel	ANT1	ANT2	MIMO
5745	149	11.78	13.48	15.72
5785	157	12.11	13.42	15.82
5825	165	12.55	13.26	15.93

© 2020 PCTEST All rights reserved. Unless otherwise specified, no part of this report may be reproduced or utilized in any part, form or by any means, electronic or mechanical, including photocopying and microfilm, without permission in writing from PCTEST. If you have any questions about this international copyright or have an enquiry about obtaining additional rights to this report or assembly of contents thereof, please contact INFO@PCTEST.COM.

Table 8-78
2.4 GHz WLAN Reduced Average RF Power – Ant 1

2.4GHz Conducted Power [dBm]				
Freq [MHz]	Channel	IEEE Transmission Mode		
		802.11b	802.11g	802.11n
		Average	Average	Average
2412	1	9.46	9.40	9.12
2437	6	9.59	9.51	9.24
2462	11	9.49	9.36	9.11

Table 8-79
2.4 GHz WLAN Reduced Average RF Power – Ant 2

2.4GHz Conducted Power [dBm]				
Freq [MHz]	Channel	IEEE Transmission Mode		
		802.11b	802.11g	802.11n
		Average	Average	Average
2412	1	6.49	6.17	6.06
2437	6	6.41	6.28	6.04
2462	11	6.29	6.21	5.81

Table 8-80
5 GHz WLAN Reduced Average RF Power – Ant 1

5GHz (40MHz) Conducted Power [dBm]			
Freq [MHz]	Channel	IEEE Transmission Mode	
		802.11n	802.11ac
		Average	Average
5190	38	7.13	7.06
5230	46	7.08	7.04
5270	54	6.82	6.77
5310	62	6.63	6.64
5510	102	6.52	6.51
5590	118	6.25	6.23
5630	126	6.59	6.61
5710	142	6.31	6.35
5755	151	6.54	6.51
5795	159	6.46	6.52

© 2020 PCTEST All rights reserved. Unless otherwise specified, no part of this report may be reproduced or utilized in any part, form or by any means, electronic or mechanical, including photocopying and microfilm, without permission in writing from PCTEST. If you have any questions about this international copyright or have an enquiry about obtaining additional rights to this report or assembly of contents thereof, please contact INFO@PCTEST.COM.

Table 8-81
5 GHz WLAN Reduced Average RF Power – Ant 2

5GHz (40MHz) Conducted Power [dBm]			
Freq [MHz]	Channel	IEEE Transmission Mode	
		802.11n	802.11ac
		Average	Average
5190	38	7.24	7.46
5230	46	7.31	7.28
5270	54	7.01	6.97
5310	62	6.98	7.05
5510	102	7.40	7.45
5590	118	7.39	7.41
5630	126	7.37	7.37
5710	142	7.43	7.48
5755	151	7.49	7.40
5795	159	7.44	7.41

Table 8-82
5 GHz WLAN Reduced Average RF Power – MIMO

5GHz (40MHz) 802.11n Conducted Power [dBm]				
Freq [MHz]	Channel	ANT1	ANT2	MIMO
5190	38	7.13	7.24	10.20
5230	46	7.08	7.31	10.21
5270	54	6.82	7.01	9.93
5310	62	6.63	6.98	9.82
5510	102	6.52	7.40	9.99
5590	118	6.25	7.39	9.87
5630	126	6.59	7.37	10.01
5710	142	6.31	7.43	9.92
5755	151	6.54	7.49	10.05
5795	159	6.46	7.44	9.99

Justification for test configurations for WLAN per KDB Publication 248227 D01v02r02:

- Power measurements were performed for the transmission mode configuration with the highest maximum output power specified for production units.
- For transmission modes with the same maximum output power specification, powers were measured for the largest channel bandwidth, lowest order modulation and lowest data rate.
- For transmission modes with identical maximum specified output power, channel bandwidth, modulation and data rates, power measurements were required for all identical configurations.

© 2020 PCTEST All rights reserved. Unless otherwise specified, no part of this report may be reproduced or utilized in any part, form or by any means, electronic or mechanical, including photocopying and microfilm, without permission in writing from PCTEST. If you have any questions about this international copyright or have an enquiry about obtaining additional rights to this report or assembly of contents thereof, please contact INFO@PCTEST.COM.

- For each transmission mode configuration, powers were measured for the highest and lowest channels; and at the mid-band channel(s) when there were at least 3 channels supported. For configurations with multiple mid-band channels, due to an even number of channels, both channels were measured.

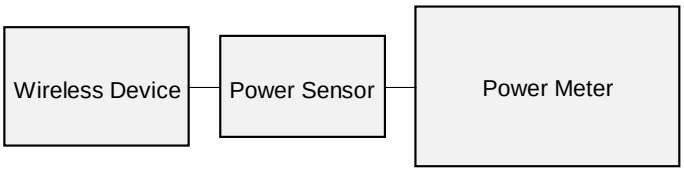

Figure 8-2
Power Measurement Setup

© 2020 PCTEST All rights reserved. Unless otherwise specified, no part of this report may be reproduced or utilized in any part, form or by any means, electronic or mechanical, including photocopying and microfilm, without permission in writing from PCTEST. If you have any questions about this international copyright or have an enquiry about obtaining additional rights to this report or assembly of contents thereof, please contact INFO@PCTEST.COM.

8.4 Bluetooth Conducted Powers

Table 8-83
Bluetooth Average RF Power

Frequency [MHz]	Data Rate [Mbps]	Channel No.	Avg Conducted Power	
			[dBm]	[mW]
2402	1.0	0	5.46	3.517
2441	1.0	39	6.54	4.510
2480	1.0	78	5.68	3.702
2402	2.0	0	4.86	3.065
2441	2.0	39	5.95	3.937
2480	2.0	78	5.10	3.239
2402	3.0	0	4.93	3.112
2441	3.0	39	6.01	3.992
2480	3.0	78	5.16	3.279

© 2020 PCTEST All rights reserved. Unless otherwise specified, no part of this report may be reproduced or utilized in any part, form or by any means, electronic or mechanical, including photocopying and microfilm, without permission in writing from PCTEST. If you have any questions about this international copyright or have an enquiry about obtaining additional rights to this report or assembly of contents thereof, please contact INFO@PCTEST.COM.

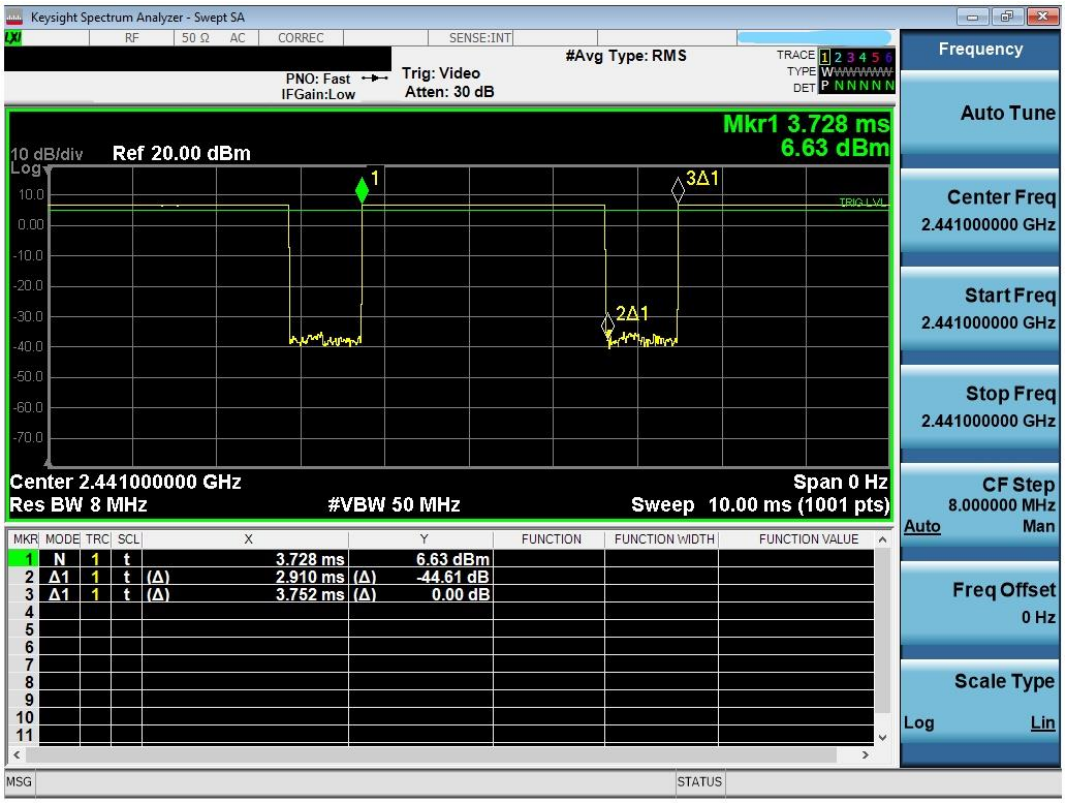

Figure 8-3
Bluetooth Transmission Plot

Equation 8-1
Bluetooth Duty Cycle Calculation

$$Duty\ Cycle = \frac{Pulse\ Width}{Period} * 100\% = \frac{2.91\ ms}{3.752\ ms} * 100\% = 77.60\%$$

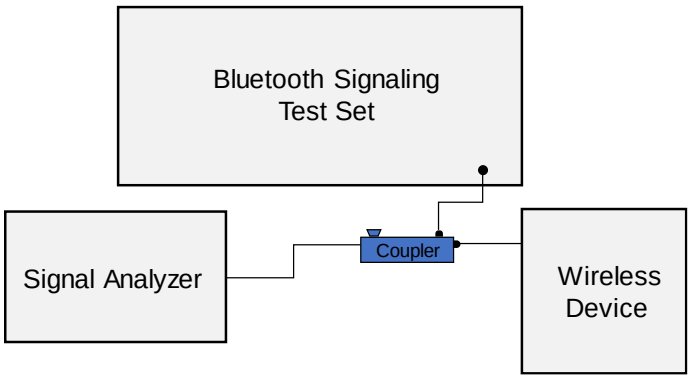

Figure 8-4
Power Measurement Setup

© 2020 PCTEST All rights reserved. Unless otherwise specified, no part of this report may be reproduced or utilized in any part, form or by any means, electronic or mechanical, including photocopying and microfilm, without permission in writing from PCTEST. If you have any questions about this international copyright or have an enquiry about obtaining additional rights to this report or assembly of contents thereof, please contact INFO@PCTEST.COM.

9 SYSTEM VERIFICATION

9.1 Tissue Verification

Table 9-1
Measured Tissue Properties

Calibrated for Tests Performed on:	Tissue Type	Tissue Temp During Calibration (˚C)	Measured Frequency (MHz)	Measured Conductivity, σ (S/m)	Measured Dielectric Constant, ε	TARGET Conductivity, σ (S/m)	TARGET Dielectric Constant, ε	% dev σ	% dev ε
02/03/2020	700 Body	19.5	680	0.923	53.667	0.958	55.804	-3.65%	-3.83%
			695	0.929	53.620	0.959	55.745	-3.13%	-3.81%
			700	0.930	53.603	0.959	55.726	-3.02%	-3.81%
			710	0.934	53.576	0.960	55.687	-2.71%	-3.79%
			725	0.940	53.535	0.961	55.629	-2.19%	-3.76%
			740	0.946	53.501	0.963	55.570	-1.77%	-3.72%
			750	0.950	53.477	0.964	55.531	-1.45%	-3.70%
			755	0.952	53.465	0.964	55.512	-1.24%	-3.69%
			770	0.958	53.428	0.965	55.453	-0.73%	-3.65%
			785	0.963	53.385	0.966	55.395	-0.31%	-3.63%
			800	0.969	53.343	0.967	55.336	0.21%	-3.60%
02/24/2020	700 Body	19.7	680	0.933	53.620	0.958	55.804	-2.61%	-3.91%
			695	0.938	53.597	0.959	55.745	-2.19%	-3.85%
			700	0.940	53.588	0.959	55.726	-1.98%	-3.84%
			710	0.944	53.566	0.960	55.687	-1.67%	-3.81%
			725	0.950	53.533	0.961	55.629	-1.14%	-3.77%
			740	0.956	53.491	0.963	55.570	-0.73%	-3.74%
			750	0.959	53.459	0.964	55.531	-0.52%	-3.73%
			755	0.961	53.445	0.964	55.512	-0.31%	-3.72%
			770	0.966	53.396	0.965	55.453	0.10%	-3.71%
			785	0.972	53.358	0.966	55.395	0.62%	-3.68%
			800	0.978	53.322	0.967	55.336	1.14%	-3.64%
01/31/2020	835 Body	21.0	820	0.944	54.604	0.969	55.258	-2.58%	-1.18%
			835	0.961	54.458	0.970	55.200	-0.93%	-1.34%
			850	0.976	54.299	0.988	55.154	-1.21%	-1.55%
02/19/2020	835 Body	20.7	820	0.985	53.197	0.969	55.258	1.65%	-3.73%
			835	0.991	53.158	0.970	55.200	2.16%	-3.70%
			850	0.998	53.118	0.988	55.154	1.01%	-3.69%
02/07/2020	1750 Body	21.3	1710	1.432	55.224	1.463	53.537	-2.12%	3.15%
			1720	1.441	55.170	1.469	53.511	-1.91%	3.10%
			1745	1.470	55.079	1.485	53.445	-1.01%	3.06%
			1750	1.477	55.071	1.488	53.432	-0.74%	3.07%
			1770	1.499	55.003	1.501	53.379	-0.13%	3.04%
			1790	1.518	54.917	1.514	53.326	0.26%	2.98%
02/17/2020	1750 Body	21.5	1710	1.454	56.197	1.463	53.537	-0.62%	4.97%
			1720	1.466	56.161	1.469	53.511	-0.20%	4.95%
			1745	1.495	56.078	1.485	53.445	0.67%	4.93%
			1750	1.500	56.062	1.488	53.432	0.81%	4.92%
			1770	1.521	55.995	1.501	53.379	1.33%	4.90%
			1790	1.542	55.929	1.514	53.326	1.85%	4.88%
01/21/2020	1900 Body	22.5	1850	1.522	52.071	1.520	53.300	0.13%	-2.31%
			1860	1.533	52.035	1.520	53.300	0.86%	-2.37%
			1880	1.554	51.971	1.520	53.300	2.24%	-2.49%
			1900	1.576	51.912	1.520	53.300	3.68%	-2.60%
			1905	1.581	51.897	1.520	53.300	4.01%	-2.63%
			1910	1.587	51.882	1.520	53.300	4.41%	-2.66%
01/22/2020	1900 Body	23.8	1850	1.506	51.968	1.520	53.300	-0.92%	-2.50%
			1860	1.516	51.933	1.520	53.300	-0.26%	-2.56%
			1880	1.538	51.861	1.520	53.300	1.18%	-2.70%
			1900	1.560	51.782	1.520	53.300	2.63%	-2.85%
			1905	1.565	51.761	1.520	53.300	2.96%	-2.89%
			1910	1.570	51.742	1.520	53.300	3.29%	-2.92%

© 2020 PCTEST All rights reserved. Unless otherwise specified, no part of this report may be reproduced or utilized in any part, form or by any means, electronic or mechanical, including photocopying and microfilm, without permission in writing from PCTEST. If you have any questions about this international copyright or have an enquiry about obtaining additional rights to this report or assembly of contents thereof, please contact INFO@PCTEST.COM.

Calibrated for Tests Performed on:	Tissue Type	Tissue Temp During Calibration (˚C)	Measured Frequency (MHz)	Measured Conductivity, σ (S/m)	Measured Dielectric Constant, ε	TARGET Conductivity, σ (S/m)	TARGET Dielectric Constant, ε	% dev σ	% dev ε
01/22/2020	2400 Body	22.5	2400	1.934	51.515	1.902	52.767	1.68%	-2.37%
			2450	2.010	51.325	1.950	52.700	3.08%	-2.61%
			2500	2.076	51.117	2.021	52.636	2.72%	-2.89%
			2510	2.092	51.070	2.035	52.623	2.80%	-2.95%
			2535	2.134	50.969	2.071	52.592	3.04%	-3.09%
			2550	2.156	50.924	2.092	52.573	3.06%	-3.14%
			2560	2.170	50.895	2.106	52.560	3.04%	-3.17%
			2600	2.227	50.726	2.163	52.509	2.96%	-3.40%
			2650	2.302	50.541	2.234	52.445	3.04%	-3.63%
			2680	2.338	50.430	2.277	52.407	2.68%	-3.77%
			2700	2.364	50.326	2.305	52.382	2.56%	-3.93%
01/24/2020	2400 Body	22.6	2400	1.976	51.125	1.902	52.767	3.89%	-3.11%
			2450	2.046	50.923	1.950	52.700	4.92%	-3.37%
			2500	2.114	50.719	2.021	52.636	4.60%	-3.64%
			2510	2.127	50.681	2.035	52.623	4.52%	-3.69%
01/30/2020	2400 Body	22.8	2400	1.966	51.530	1.902	52.767	3.36%	-2.34%
			2450	2.024	51.394	1.950	52.700	3.79%	-2.48%
			2500	2.083	51.258	2.021	52.636	3.07%	-2.62%
			2510	2.095	51.230	2.035	52.623	2.95%	-2.65%
02/10/2020	5200-5800 Body	23.1	5180	5.441	47.224	5.276	49.041	3.13%	-3.71%
			5190	5.453	47.224	5.288	49.028	3.12%	-3.68%
			5200	5.472	47.217	5.299	49.014	3.26%	-3.67%
			5210	5.488	47.185	5.311	49.001	3.33%	-3.71%
			5220	5.497	47.152	5.323	48.987	3.27%	-3.75%
			5240	5.522	47.119	5.346	48.960	3.29%	-3.76%
			5250	5.540	47.095	5.358	48.947	3.40%	-3.78%
			5260	5.555	47.063	5.369	48.933	3.46%	-3.82%
			5270	5.568	47.040	5.381	48.919	3.48%	-3.84%
			5280	5.579	47.032	5.393	48.906	3.45%	-3.83%
			5290	5.593	47.030	5.404	48.892	3.50%	-3.81%
			5300	5.606	47.018	5.416	48.879	3.51%	-3.81%
			5310	5.617	46.999	5.428	48.865	3.48%	-3.82%
			5320	5.625	46.973	5.439	48.851	3.42%	-3.84%
			5500	5.870	46.664	5.650	48.607	3.89%	-4.00%
			5510	5.886	46.644	5.661	48.594	3.97%	-4.01%
			5520	5.897	46.636	5.673	48.580	3.95%	-4.00%
			5530	5.908	46.641	5.685	48.566	3.92%	-3.96%
			5540	5.923	46.634	5.696	48.553	3.99%	-3.95%
			5550	5.936	46.597	5.708	48.539	3.99%	-4.00%
			5560	5.947	46.560	5.720	48.526	3.97%	-4.05%
			5580	5.975	46.528	5.743	48.499	4.04%	-4.06%
			5600	6.006	46.496	5.766	48.471	4.16%	-4.07%
			5610	6.020	46.465	5.778	48.458	4.19%	-4.11%
			5620	6.034	46.447	5.790	48.444	4.21%	-4.12%
			5640	6.065	46.443	5.813	48.417	4.34%	-4.08%
			5660	6.093	46.402	5.837	48.390	4.39%	-4.11%
			5670	6.103	46.381	5.848	48.376	4.36%	-4.12%
			5680	6.113	46.364	5.860	48.363	4.32%	-4.13%
			5690	6.128	46.343	5.872	48.349	4.36%	-4.15%
			5700	6.146	46.311	5.883	48.336	4.47%	-4.19%
			5710	6.160	46.293	5.895	48.322	4.50%	-4.20%
			5720	6.170	46.287	5.907	48.309	4.45%	-4.19%
			5745	6.210	46.260	5.936	48.275	4.62%	-4.17%
			5750	6.219	46.246	5.942	48.268	4.66%	-4.19%
			5755	6.225	46.234	5.947	48.261	4.67%	-4.20%
			5765	6.234	46.221	5.959	48.248	4.61%	-4.20%
			5775	6.248	46.218	5.971	48.234	4.64%	-4.18%
			5785	6.263	46.215	5.982	48.220	4.70%	-4.16%
			5795	6.280	46.182	5.994	48.207	4.77%	-4.20%
			5800	6.285	46.161	6.000	48.200	4.75%	-4.23%
			5805	6.289	46.144	6.006	48.193	4.71%	-4.25%
			5825	6.313	46.127	6.029	48.166	4.71%	-4.23%

The above measured tissue parameters were used in the DASY software. The DASY software was used to perform interpolation to determine the dielectric parameters at the SAR test device frequencies (per KDB Publication 865664 D01v01r04 and IEEE 1528-2013 6.6.1.2). The tissue parameters listed in the SAR test plots may slightly differ from the table above due to significant digit rounding in the software.

© 2020 PCTEST All rights reserved. Unless otherwise specified, no part of this report may be reproduced or utilized in any part, form or by any means, electronic or mechanical, including photocopying and microfilm, without permission in writing from PCTEST. If you have any questions about this international copyright or have an enquiry about obtaining additional rights to this report or assembly of contents thereof, please contact INFO@PCTEST.COM.

9.2 Test System Verification

Prior to SAR assessment, the system is verified to ±10% of the SAR measurement on the reference dipole at the time of calibration by the calibration facility. Full system validation status and result summary can be found in Appendix D.

Table 9-2
System Verification Results – 1g

System Verification TARGET & MEASURED												
SAR System #	Tissue Frequency (MHz)	Tissue Type	Date	Amb. Temp (°C)	Liquid Temp (°C)	Input Power (W)	Source SN	Probe SN	Measured SAR_{1g} (W/kg)	1 W Target SAR_{1g} (W/kg)	1 W Normalized SAR_{1g} (W/kg)	$Deviation_{1g}$ (%)
K	750	BODY	02/03/2020	23.1	19.5	0.200	1054	7547	1.830	8.550	9.150	7.02%
E	750	BODY	02/24/2020	22.7	19.7	0.200	1003	3589	1.810	8.580	9.050	5.48%
H	835	BODY	01/31/2020	22.8	21.0	0.200	4d047	7406	2.020	9.470	10.100	6.65%
O	835	BODY	02/19/2020	21.9	20.7	0.200	4d132	7552	2.100	9.960	10.500	5.42%
I	1750	BODY	02/07/2020	22.8	21.3	0.100	1148	7357	3.920	37.700	39.200	3.98%
I	1750	BODY	02/17/2020	21.9	21.5	0.100	1148	7357	3.990	37.700	39.900	5.84%
P	1900	BODY	01/21/2020	22.0	21.4	0.100	5d080	7551	4.010	39.200	40.100	2.30%
J	1900	BODY	01/22/2020	23.3	22.4	0.100	5d148	7571	4.160	39.100	41.600	6.39%
L	2450	BODY	01/22/2020	23.5	21.0	0.100	797	7410	5.090	51.100	50.900	-0.39%
L	2450	BODY	01/24/2020	24.5	22.6	0.100	981	7410	5.220	50.900	52.200	2.55%
K	2450	BODY	01/30/2020	23.9	22.8	0.100	797	7547	5.170	51.100	51.700	1.17%
L	2600	BODY	01/22/2020	23.5	21.0	0.100	1004	7410	5.420	54.800	54.200	-1.09%
G	5250	BODY	02/10/2020	22.3	23.1	0.050	1057	7409	3.750	75.900	75.000	-1.19%
G	5600	BODY	02/10/2020	22.3	23.1	0.050	1057	7409	3.980	79.900	79.600	-0.38%
G	5750	BODY	02/10/2020	22.3	23.1	0.050	1057	7409	3.870	76.700	77.400	0.91%

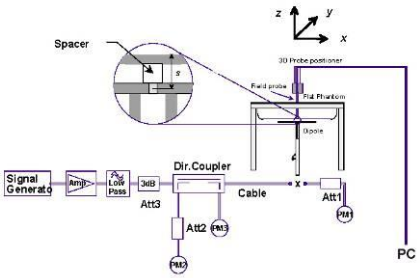

Figure 9-1
System Verification Setup Diagram

Figure 9-2
System Verification Setup Photo

© 2020 PCTEST All rights reserved. Unless otherwise specified, no part of this report may be reproduced or utilized in any part, form or by any means, electronic or mechanical, including photocopying and microfilm, without permission in writing from PCTEST. If you have any questions about this international copyright or have an enquiry about obtaining additional rights to this report or assembly of contents thereof, please contact INFO@PCTEST.COM.

10 SAR DATA SUMMARY

10.1 Standalone Body-Worn SAR Data

Table 10-1
UMTS Body SAR Data

MEASUREMENT RESULTS														
FREQUENCY		Mode	Service	Maximum Allowed Power [dBm]	Conducted Power [dBm]	Power Drift [dB]	Spacing	Device Serial Number	Duty Cycle	Side	SAR (1g)	Scaling Factor	Reported SAR (1g)	Plot #
MHz	Ch.										(W/kg)		(W/kg)	
836.60	4183	UMTS 850	RMC	25.2	25.05	0.02	17 mm	00309	1:1	back	0.604	1.035	0.625	
826.40	4132	UMTS 850	RMC	25.2	25.03	-0.13	17 mm	00309	1:1	top	0.608	1.040	0.632	
836.60	4183	UMTS 850	RMC	25.2	25.05	-0.01	17 mm	00309	1:1	top	0.767	1.035	0.794	
846.60	4233	UMTS 850	RMC	25.2	25.13	-0.07	17 mm	00309	1:1	top	0.688	1.016	0.699	
836.60	4183	UMTS 850	RMC	25.2	25.05	0.01	0 mm	00309	1:1	right	0.168	1.035	0.174	
836.60	4183	UMTS 850	RMC	25.2	25.05	0.07	0 mm	00309	1:1	left	0.301	1.035	0.312	
826.40	4132	UMTS 850	RMC	18.7	18.70	0.00	0 mm	00309	1:1	back	0.883	1.000	0.883	A1
836.60	4183	UMTS 850	RMC	18.7	18.66	-0.03	0 mm	00309	1:1	back	0.860	1.009	0.868	
846.60	4233	UMTS 850	RMC	18.7	18.68	0.09	0 mm	00309	1:1	back	0.850	1.005	0.854	
836.60	4183	UMTS 850	RMC	18.7	18.66	0.01	0 mm	00309	1:1	top	0.678	1.009	0.684	
826.40	4132	UMTS 850	RMC	18.7	18.70	0.00	0 mm	00309	1:1	back	0.865	1.000	0.865	
1732.40	1412	UMTS 1750	RMC	25.2	24.76	-0.02	17 mm	00309	1:1	back	0.574	1.107	0.635	
1732.40	1412	UMTS 1750	RMC	25.2	24.76	-0.01	17 mm	00309	1:1	top	0.479	1.107	0.530	
1732.40	1412	UMTS 1750	RMC	25.2	24.76	-0.01	0 mm	00309	1:1	right	0.205	1.107	0.227	
1712.40	1312	UMTS 1750	RMC	25.2	24.74	0.02	0 mm	00309	1:1	left	0.631	1.112	0.702	
1732.40	1412	UMTS 1750	RMC	25.2	24.76	0.03	0 mm	00309	1:1	left	0.725	1.107	0.803	
1752.60	1513	UMTS 1750	RMC	25.2	24.69	0.02	0 mm	00309	1:1	left	0.751	1.125	0.845	
1732.40	1412	UMTS 1750	RMC	12.7	12.65	-0.18	0 mm	00408	1:1	back	0.756	1.012	0.765	A2
1732.40	1412	UMTS 1750	RMC	12.7	12.65	-0.03	0 mm	00408	1:1	top	0.535	1.012	0.541	
1852.40	9262	UMTS 1900	RMC	24.7	23.89	0.01	17 mm	00408	1:1	back	0.866	1.205	1.044	
1880.00	9400	UMTS 1900	RMC	24.7	24.03	0.08	17 mm	00408	1:1	back	0.940	1.167	1.097	
1907.60	9538	UMTS 1900	RMC	24.7	24.15	-0.02	17 mm	00408	1:1	back	1.020	1.135	1.158	
1852.40	9262	UMTS 1900	RMC	24.7	23.89	0.03	17 mm	00408	1:1	top	0.971	1.205	1.170	
1880.00	9400	UMTS 1900	RMC	24.7	24.03	0.00	17 mm	00408	1:1	top	1.030	1.167	1.202	
1907.60	9538	UMTS 1900	RMC	24.7	24.15	0.11	17 mm	00408	1:1	top	1.070	1.135	1.214	A3
1880.00	9400	UMTS 1900	RMC	24.7	24.03	0.09	0 mm	00408	1:1	right	0.216	1.167	0.252	
1880.00	9400	UMTS 1900	RMC	24.7	24.03	-0.03	0 mm	00408	1:1	left	0.531	1.167	0.620	
1852.40	9262	UMTS 1900	RMC	11.7	11.45	-0.19	0 mm	00408	1:1	back	0.733	1.059	0.776	
1880.00	9400	UMTS 1900	RMC	11.7	11.57	-0.11	0 mm	00408	1:1	back	0.761	1.030	0.784	
1907.60	9538	UMTS 1900	RMC	11.7	11.54	-0.10	0 mm	00408	1:1	back	0.779	1.038	0.809	
1880.00	9400	UMTS 1900	RMC	11.7	11.57	0.05	0 mm	00408	1:1	top	0.237	1.030	0.244	
ANSI / IEEE C95.1 1992 - SAFETY LIMIT Spatial Peak Uncontrolled Exposure/General Population							Body 1.6 W/kg (mW/g) averaged over 1 gram							

Note: Blue entry represents variability measurement.

© 2020 PCTEST All rights reserved. Unless otherwise specified, no part of this report may be reproduced or utilized in any part, form or by any means, electronic or mechanical, including photocopying and microfilm, without permission in writing from PCTEST. If you have any questions about this international copyright or have an enquiry about obtaining additional rights to this report or assembly of contents thereof, please contact INFO@PCTEST.COM.

Table 10-2
LTE B71 Body SAR

MEASUREMENT RESULTS																				
FREQUENCY			Mode	Bandwidth [MHz]	Maximum Allowed Power [dBm]	Conducted Power [dBm]	Power Drift [dB]	MPR [dB]	Device Serial Number	Modulation	RB Size	RB Offset	Spacing	Side	Duty Cycle	SAR (1g)	Scaling Factor	Reported SAR (1g)	Plot #
MHz	Ch.															(W/kg)		(W/kg)	
680.50	133297	Mid	LTE Band 71	20	25.2	24.94	-0.04	0	00309	QPSK	1	0	17 mm	back	1:1	0.477	1.062	0.507	
680.50	133297	Mid	LTE Band 71	20	24.2	23.75	0.01	1	00309	QPSK	50	0	17 mm	back	1:1	0.331	1.109	0.367	
680.50	133297	Mid	LTE Band 71	20	25.2	24.94	-0.09	0	00309	QPSK	1	0	17 mm	top	1:1	0.380	1.062	0.404	
680.50	133297	Mid	LTE Band 71	20	24.2	23.75	-0.02	1	00309	QPSK	50	0	17 mm	top	1:1	0.275	1.109	0.305	
680.50	133297	Mid	LTE Band 71	20	25.2	24.94	-0.18	0	00309	QPSK	1	0	0 mm	right	1:1	0.203	1.062	0.216	
680.50	133297	Mid	LTE Band 71	20	24.2	23.75	-0.13	1	00309	QPSK	50	0	0 mm	right	1:1	0.114	1.109	0.126	
680.50	133297	Mid	LTE Band 71	20	25.2	24.94	-0.04	0	00309	QPSK	1	0	0 mm	left	1:1	0.290	1.062	0.308	
680.50	133297	Mid	LTE Band 71	20	24.2	23.75	0.04	1	00309	QPSK	50	0	0 mm	left	1:1	0.208	1.109	0.231	
680.50	133297	Mid	LTE Band 71	20	17.7	17.51	-0.01	0	00309	QPSK	1	0	0 mm	back	1:1	0.890	1.045	0.930	A4
680.50	133297	Mid	LTE Band 71	20	17.7	17.05	-0.04	0	00309	QPSK	50	0	0 mm	back	1:1	0.784	1.161	0.910	
680.50	133297	Mid	LTE Band 71	20	17.7	16.94	0.00	0	00309	QPSK	100	0	0 mm	back	1:1	0.741	1.191	0.883	
680.50	133297	Mid	LTE Band 71	20	17.7	17.51	0.07	0	00309	QPSK	1	0	0 mm	top	1:1	0.666	1.045	0.696	
680.50	133297	Mid	LTE Band 71	20	17.7	17.05	0.18	0	00309	QPSK	50	0	0 mm	top	1:1	0.609	1.161	0.707	
680.50	133297	Mid	LTE Band 71	20	17.7	17.51	0.02	0	00309	QPSK	1	0	0 mm	back	1:1	0.850	1.045	0.888	
ANSI / IEEE C95.1 1992 - SAFETY LIMIT Spatial Peak Uncontrolled Exposure/General Population						Body 1.6 W/kg (mW/g) averaged over 1 gram													

Note: Blue entry represents variability measurement.

Table 10-3
LTE B12 Body SAR

MEASUREMENT RESULTS																				
FREQUENCY			Mode	Bandwidth [MHz]	Maximum Allowed Power [dBm]	Conducted Power [dBm]	Power Drift [dB]	MPR [dB]	Device Serial Number	Modulation	RB Size	RB Offset	Spacing	Side	Duty Cycle	SAR (1g)	Scaling Factor	Reported SAR (1g)	Plot #
MHz	Ch.															(W/kg)		(W/kg)	
707.50	23095	Mid	LTE Band 12	10	25.2	25.10	0.01	0	00309	QPSK	1	0	17 mm	back	1:1	0.456	1.023	0.466	
707.50	23095	Mid	LTE Band 12	10	24.2	24.03	-0.01	1	00309	QPSK	25	12	17 mm	back	1:1	0.318	1.040	0.331	
707.50	23095	Mid	LTE Band 12	10	25.2	25.10	0.00	0	00309	QPSK	1	0	17 mm	top	1:1	0.348	1.023	0.356	
707.50	23095	Mid	LTE Band 12	10	24.2	24.03	-0.10	1	00309	QPSK	25	12	17 mm	top	1:1	0.237	1.040	0.246	
707.50	23095	Mid	LTE Band 12	10	25.2	25.10	-0.08	0	00309	QPSK	1	0	0 mm	right	1:1	0.141	1.023	0.144	
707.50	23095	Mid	LTE Band 12	10	24.2	24.03	-0.05	1	00309	QPSK	25	12	0 mm	right	1:1	0.108	1.040	0.112	
707.50	23095	Mid	LTE Band 12	10	25.2	25.10	-0.01	0	00309	QPSK	1	0	0 mm	left	1:1	0.334	1.023	0.342	
707.50	23095	Mid	LTE Band 12	10	24.2	24.03	0.02	1	00309	QPSK	25	12	0 mm	left	1:1	0.206	1.040	0.214	
707.50	23095	Mid	LTE Band 12	10	18.7	18.55	-0.13	0	00309	QPSK	1	0	0 mm	back	1:1	0.683	1.035	0.707	A5
707.50	23095	Mid	LTE Band 12	10	18.7	18.54	-0.12	0	00309	QPSK	25	12	0 mm	back	1:1	0.638	1.038	0.662	
707.50	23095	Mid	LTE Band 12	10	18.7	18.55	0.12	0	00309	QPSK	1	0	0 mm	top	1:1	0.484	1.035	0.501	
707.50	23095	Mid	LTE Band 12	10	18.7	18.54	0.11	0	00309	QPSK	25	12	0 mm	top	1:1	0.477	1.038	0.495	
ANSI / IEEE C95.1 1992 - SAFETY LIMIT Spatial Peak Uncontrolled Exposure/General Population						Body 1.6 W/kg (mW/g) averaged over 1 gram													

© 2020 PCTEST All rights reserved. Unless otherwise specified, no part of this report may be reproduced or utilized in any part, form or by any means, electronic or mechanical, including photocopying and microfilm, without permission in writing from PCTEST. If you have any questions about this international copyright or have an enquiry about obtaining additional rights to this report or assembly of contents thereof, please contact INFO@PCTEST.COM.

Table 10-4
LTE B13 Body SAR

MEASUREMENT RESULTS																				
FREQUENCY			Mode	Bandwidth [MHz]	Maximum Allowed Power [dBm]	Conducted Power [dBm]	Power Drift [dB]	MPR [dB]	Device Serial Number	Modulation	RB Size	RB Offset	Spacing	Side	Duty Cycle	SAR (1g)	Scaling Factor	Reported SAR (1g)	Plot #
MHz	Ch.															(W/kg)		(W/kg)	
782.00	23230	Mid	LTE Band 13	10	25.2	25.19	-0.07	0	00309	QPSK	1	0	17 mm	back	1:1	0.448	1.002	0.449	
782.00	23230	Mid	LTE Band 13	10	24.2	24.13	0.00	1	00309	QPSK	25	12	17 mm	back	1:1	0.326	1.016	0.331	
782.00	23230	Mid	LTE Band 13	10	25.2	25.19	0.08	0	00309	QPSK	1	0	17 mm	top	1:1	0.289	1.002	0.290	
782.00	23230	Mid	LTE Band 13	10	24.2	24.13	0.01	1	00309	QPSK	25	12	17 mm	top	1:1	0.239	1.016	0.243	
782.00	23230	Mid	LTE Band 13	10	25.2	25.19	-0.12	0	00309	QPSK	1	0	0 mm	right	1:1	0.127	1.002	0.127	
782.00	23230	Mid	LTE Band 13	10	24.2	24.13	0.21	1	00309	QPSK	25	12	0 mm	right	1:1	0.081	1.016	0.082	
782.00	23230	Mid	LTE Band 13	10	25.2	25.19	0.14	0	00309	QPSK	1	0	0 mm	left	1:1	0.324	1.002	0.325	
782.00	23230	Mid	LTE Band 13	10	24.2	24.13	0.17	1	00309	QPSK	25	12	0 mm	left	1:1	0.226	1.016	0.230	
782.00	23230	Mid	LTE Band 13	10	17.2	17.20	0.02	0	00309	QPSK	1	0	0 mm	back	1:1	0.793	1.000	0.793	
782.00	23230	Mid	LTE Band 13	10	17.2	17.19	-0.01	0	00309	QPSK	25	0	0 mm	back	1:1	0.814	1.002	0.816	A6
782.00	23230	Mid	LTE Band 13	10	17.2	17.18	0.01	0	00309	QPSK	50	0	0 mm	back	1:1	0.796	1.005	0.800	
782.00	23230	Mid	LTE Band 13	10	17.2	17.20	-0.03	0	00309	QPSK	1	0	0 mm	top	1:1	0.600	1.000	0.600	
782.00	23230	Mid	LTE Band 13	10	17.2	17.19	-0.07	0	00309	QPSK	25	0	0 mm	top	1:1	0.608	1.002	0.609	
ANSI / IEEE C95.1 1992 - SAFETY LIMIT Spatial Peak Uncontrolled Exposure/General Population									Body 1.6 W/kg (mW/g) averaged over 1 gram										

Table 10-5
LTE B26 Body SAR

MEASUREMENT RESULTS																				
FREQUENCY			Mode	Bandwidth [MHz]	Maximum Allowed Power [dBm]	Conducted Power [dBm]	Power Drift [dB]	MPR [dB]	Device Serial Number	Modulation	RB Size	RB Offset	Spacing	Side	Duty Cycle	SAR (1g)	Scaling Factor	Reported SAR (1g)	Plot #
MHz	Ch.															(W/kg)		(W/kg)	
831.50	26865	Mid	LTE Band 26 (Cell)	15	25.2	24.92	0.00	0	00309	QPSK	1	0	17 mm	back	1:1	0.543	1.067	0.579	
831.50	26865	Mid	LTE Band 26 (Cell)	15	24.2	24.16	0.00	1	00309	QPSK	36	18	17 mm	back	1:1	0.408	1.009	0.412	
831.50	26865	Mid	LTE Band 26 (Cell)	15	25.2	24.92	-0.03	0	00309	QPSK	1	0	17 mm	top	1:1	0.657	1.067	0.701	
831.50	26865	Mid	LTE Band 26 (Cell)	15	24.2	24.16	-0.04	1	00309	QPSK	36	18	17 mm	top	1:1	0.510	1.009	0.515	
831.50	26865	Mid	LTE Band 26 (Cell)	15	25.2	24.92	-0.03	0	00309	QPSK	1	0	0 mm	right	1:1	0.160	1.067	0.171	
831.50	26865	Mid	LTE Band 26 (Cell)	15	24.2	24.16	-0.16	1	00309	QPSK	36	18	0 mm	right	1:1	0.126	1.009	0.127	
831.50	26865	Mid	LTE Band 26 (Cell)	15	25.2	24.92	-0.03	0	00309	QPSK	1	0	0 mm	left	1:1	0.292	1.067	0.312	
831.50	26865	Mid	LTE Band 26 (Cell)	15	24.2	24.16	-0.03	1	00309	QPSK	36	18	0 mm	left	1:1	0.202	1.009	0.204	
831.50	26865	Mid	LTE Band 26 (Cell)	15	18.2	17.94	0.00	0	00309	QPSK	1	74	0 mm	back	1:1	0.775	1.062	0.823	
831.50	26865	Mid	LTE Band 26 (Cell)	15	18.2	17.97	0.01	0	00309	QPSK	36	37	0 mm	back	1:1	0.782	1.054	0.824	A7
831.50	26865	Mid	LTE Band 26 (Cell)	15	18.2	17.92	-0.01	0	00309	QPSK	75	0	0 mm	back	1:1	0.605	1.067	0.646	
831.50	26865	Mid	LTE Band 26 (Cell)	15	18.2	17.94	-0.05	0	00309	QPSK	1	74	0 mm	top	1:1	0.565	1.062	0.600	
831.50	26865	Mid	LTE Band 26 (Cell)	15	18.2	17.97	-0.02	0	00309	QPSK	36	37	0 mm	top	1:1	0.571	1.054	0.602	
ANSI / IEEE C95.1 1992 - SAFETY LIMIT Spatial Peak Uncontrolled Exposure/General Population									Body 1.6 W/kg (mW/g) averaged over 1 gram										

© 2020 PCTEST All rights reserved. Unless otherwise specified, no part of this report may be reproduced or utilized in any part, form or by any means, electronic or mechanical, including photocopying and microfilm, without permission in writing from PCTEST. If you have any questions about this international copyright or have an enquiry about obtaining additional rights to this report or assembly of contents thereof, please contact INFO@PCTEST.COM.

Table 10-6
LTE B66 Body SAR

MEASUREMENT RESULTS																				
FREQUENCY			Mode	Bandwidth [MHz]	Maximum Allowed Power [dBm]	Conducted Power [dBm]	Power Drift [dB]	MPR [dB]	Device Serial Number	Modulation	RB Size	RB Offset	Spacing	Side	Duty Cycle	SAR (1g)	Scaling Factor	Reported SAR (1g)	Plot #
MHz	Ch.															(W/kg)		(W/kg)	
1745.00	132322	Mid	LTE Band 66 (AWS)	20	25.2	25.16	-0.02	0	00408	QPSK	1	0	17 mm	back	1:1	0.632	1.009	0.638	
1745.00	132322	Mid	LTE Band 66 (AWS)	20	24.2	24.15	0.04	1	00408	QPSK	50	25	17 mm	back	1:1	0.425	1.012	0.430	
1745.00	132322	Mid	LTE Band 66 (AWS)	20	25.2	25.16	0.00	0	00408	QPSK	1	0	17 mm	top	1:1	0.587	1.009	0.592	
1745.00	132322	Mid	LTE Band 66 (AWS)	20	24.2	24.15	0.01	1	00408	QPSK	50	25	17 mm	top	1:1	0.411	1.012	0.416	
1745.00	132322	Mid	LTE Band 66 (AWS)	20	25.2	25.16	0.08	0	00408	QPSK	1	0	0 mm	right	1:1	0.225	1.009	0.227	
1745.00	132322	Mid	LTE Band 66 (AWS)	20	24.2	24.15	0.00	1	00408	QPSK	50	25	0 mm	right	1:1	0.171	1.012	0.173	
1720.00	132072	Low	LTE Band 66 (AWS)	20	25.2	25.02	0.07	0	00408	QPSK	1	0	0 mm	left	1:1	0.811	1.042	0.845	
1745.00	132322	Mid	LTE Band 66 (AWS)	20	25.2	25.16	0.04	0	00408	QPSK	1	0	0 mm	left	1:1	0.894	1.009	0.902	
1770.00	132572	High	LTE Band 66 (AWS)	20	25.2	24.73	0.10	0	00408	QPSK	1	99	0 mm	left	1:1	0.937	1.114	1.044	A8
1745.00	132322	Mid	LTE Band 66 (AWS)	20	24.2	24.15	0.07	1	00408	QPSK	50	25	0 mm	left	1:1	0.598	1.012	0.605	
1745.00	132322	Mid	LTE Band 66 (AWS)	20	24.2	23.87	0.04	1	00408	QPSK	100	0	0 mm	left	1:1	0.616	1.079	0.665	
1745.00	132322	Mid	LTE Band 66 (AWS)	20	12.7	12.38	-0.12	0	00408	QPSK	1	50	0 mm	back	1:1	0.595	1.076	0.640	
1745.00	132322	Mid	LTE Band 66 (AWS)	20	12.7	12.25	-0.16	0	00408	QPSK	50	25	0 mm	back	1:1	0.591	1.109	0.655	
1745.00	132322	Mid	LTE Band 66 (AWS)	20	12.7	12.38	0.02	0	00408	QPSK	1	50	0 mm	top	1:1	0.464	1.076	0.499	
1745.00	132322	Mid	LTE Band 66 (AWS)	20	12.7	12.25	0.00	0	00408	QPSK	50	25	0 mm	top	1:1	0.448	1.109	0.497	
1770.00	132572	High	LTE Band 66 (AWS)	20	25.2	24.73	0.10	0	00408	QPSK	1	99	0 mm	left	1:1	0.932	1.114	1.038	
ANSI / IEEE C95.1 1992 - SAFETY LIMIT Spatial Peak Uncontrolled Exposure/General Population									Body 1.6 W/kg (mW/g) averaged over 1 gram										

Note: Blue entry represents variability measurement.

© 2020 PCTEST All rights reserved. Unless otherwise specified, no part of this report may be reproduced or utilized in any part, form or by any means, electronic or mechanical, including photocopying and microfilm, without permission in writing from PCTEST. If you have any questions about this international copyright or have an enquiry about obtaining additional rights to this report or assembly of contents thereof, please contact INFO@PCTEST.COM.

Table 10-7
LTE B25 Body SAR

MEASUREMENT RESULTS																				
FREQUENCY			Mode	Bandwidth [MHz]	Maximum Allowed Power [dBm]	Conducted Power [dBm]	Power Drift [dB]	MPR [dB]	Device Serial Number	Modulation	RB Size	RB Offset	Spacing	Side	Duty Cycle	SAR (1g)	Scaling Factor	Reported SAR (1g)	Plot #
MHz	Ch.															(W/kg)		(W/kg)	
1860.00	26140	Low	LTE Band 25 (PCS)	20	24.7	24.43	-0.02	0	00408	QPSK	1	99	17 mm	back	1:1	1.010	1.064	1.075	
1882.50	26365	Mid	LTE Band 25 (PCS)	20	24.7	24.54	0.05	0	00408	QPSK	1	99	17 mm	back	1:1	1.040	1.038	1.080	
1905.00	26590	High	LTE Band 25 (PCS)	20	24.7	24.40	-0.04	0	00408	QPSK	1	0	17 mm	back	1:1	1.190	1.072	1.276	A9
1882.50	26365	Mid	LTE Band 25 (PCS)	20	23.7	23.43	0.02	1	00408	QPSK	50	0	17 mm	back	1:1	0.714	1.064	0.760	
1905.00	26590	High	LTE Band 25 (PCS)	20	23.7	23.42	-0.07	1	00408	QPSK	100	0	17 mm	back	1:1	0.760	1.067	0.811	
1860.00	26140	Low	LTE Band 25 (PCS)	20	24.7	24.43	0.00	0	00408	QPSK	1	99	17 mm	top	1:1	0.807	1.064	0.859	
1882.50	26365	Mid	LTE Band 25 (PCS)	20	24.7	24.54	0.01	0	00408	QPSK	1	99	17 mm	top	1:1	0.853	1.038	0.885	
1905.00	26590	High	LTE Band 25 (PCS)	20	24.7	24.40	0.03	0	00408	QPSK	1	0	17 mm	top	1:1	0.995	1.072	1.067	
1882.50	26365	Mid	LTE Band 25 (PCS)	20	23.7	23.43	0.02	1	00408	QPSK	50	0	17 mm	top	1:1	0.579	1.064	0.616	
1905.00	26590	High	LTE Band 25 (PCS)	20	23.7	23.42	0.02	1	00408	QPSK	100	0	17 mm	top	1:1	0.638	1.067	0.681	
1882.50	26365	Mid	LTE Band 25 (PCS)	20	24.7	24.54	0.04	0	00408	QPSK	1	99	0 mm	right	1:1	0.175	1.038	0.182	
1882.50	26365	Mid	LTE Band 25 (PCS)	20	23.7	23.43	-0.06	1	00408	QPSK	50	0	0 mm	right	1:1	0.129	1.064	0.137	
1882.50	26365	Mid	LTE Band 25 (PCS)	20	24.7	24.54	-0.17	0	00408	QPSK	1	99	0 mm	left	1:1	0.609	1.038	0.632	
1882.50	26365	Mid	LTE Band 25 (PCS)	20	23.7	23.43	0.02	1	00408	QPSK	50	0	0 mm	left	1:1	0.378	1.064	0.402	
1860.00	26140	Low	LTE Band 25 (PCS)	20	11.7	11.36	-0.16	0	00408	QPSK	1	99	0 mm	back	1:1	0.754	1.081	0.815	
1882.50	26365	Mid	LTE Band 25 (PCS)	20	11.7	11.41	-0.15	0	00408	QPSK	1	99	0 mm	back	1:1	0.787	1.069	0.841	
1905.00	26590	High	LTE Band 25 (PCS)	20	11.7	11.70	-0.18	0	00408	QPSK	1	99	0 mm	back	1:1	0.823	1.000	0.823	
1860.00	26140	Low	LTE Band 25 (PCS)	20	11.7	11.52	-0.10	0	00408	QPSK	50	25	0 mm	back	1:1	0.754	1.042	0.786	
1882.50	26365	Mid	LTE Band 25 (PCS)	20	11.7	11.68	-0.18	0	00408	QPSK	50	50	0 mm	back	1:1	0.780	1.005	0.784	
1905.00	26590	High	LTE Band 25 (PCS)	20	11.7	11.69	-0.11	0	00408	QPSK	50	50	0 mm	back	1:1	0.844	1.002	0.846	
1905.00	26590	High	LTE Band 25 (PCS)	20	11.7	11.66	-0.16	0	00408	QPSK	100	0	0 mm	back	1:1	0.817	1.009	0.824	
1905.00	26590	High	LTE Band 25 (PCS)	20	11.7	11.70	0.07	0	00408	QPSK	1	99	0 mm	top	1:1	0.240	1.000	0.240	
1905.00	26590	High	LTE Band 25 (PCS)	20	11.7	11.69	0.02	0	00408	QPSK	50	50	0 mm	top	1:1	0.246	1.002	0.246	
1905.00	26590	High	LTE Band 25 (PCS)	20	24.7	24.40	-0.09	0	00408	QPSK	1	0	17 mm	back	1:1	1.090	1.072	1.168	
ANSI / IEEE C95.1 1992 - SAFETY LIMIT Spatial Peak Uncontrolled Exposure/General Population									Body 1.6 W/kg (mW/g) averaged over 1 gram										

Note: Blue entry represents variability measurement.

© 2020 PCTEST All rights reserved. Unless otherwise specified, no part of this report may be reproduced or utilized in any part, form or by any means, electronic or mechanical, including photocopying and microfilm, without permission in writing from PCTEST. If you have any questions about this international copyright or have an enquiry about obtaining additional rights to this report or assembly of contents thereof, please contact INFO@PCTEST.COM.

Table 10-8
LTE B41 Body SAR

MEASUREMENT RESULTS																				
Power Class	FREQUENCY			Mode	Bandwidth [MHz]	Maximum Allowed Power [dBm]	Conducted Power [dBm]	Power Drift [dB]	MPR [dB]	Device Serial Number	Modulation	RB Size	RB Offset	Spacing	Side	Duty Cycle	SAR (1g)	Scaling Factor	Reported SAR (1g)	Plot #
	MHz	Ch.															(W/kg)		(W/kg)	
Power Class 3	2680.00	41490	High	LTE Band 41	20	23.2	23.18	-0.12	0	00309	QPSK	1	50	17 mm	back	1:1.58	0.210	1.005	0.211	
Power Class 3	2593.00	40620	Mid	LTE Band 41	20	22.2	22.19	-0.07	1	00309	QPSK	50	25	17 mm	back	1:1.58	0.160	1.002	0.160	
Power Class 3	2680.00	41490	High	LTE Band 41	20	23.2	23.18	-0.07	0	00309	QPSK	1	50	17 mm	top	1:1.58	0.275	1.005	0.276	
Power Class 3	2593.00	40620	Mid	LTE Band 41	20	22.2	22.19	-0.03	1	00309	QPSK	50	25	17 mm	top	1:1.58	0.209	1.002	0.209	
Power Class 3	2506.00	39750	Low	LTE Band 41	20	23.2	22.92	0.00	0	00309	QPSK	1	99	0 mm	left	1:1.58	0.674	1.067	0.719	
Power Class 3	2549.50	40185	Low-Mid	LTE Band 41	20	23.2	23.16	-0.08	0	00309	QPSK	1	99	0 mm	left	1:1.58	0.799	1.009	0.806	
Power Class 3	2593.00	40620	Mid	LTE Band 41	20	23.2	23.05	-0.03	0	00309	QPSK	1	50	0 mm	left	1:1.58	0.971	1.035	1.005	
Power Class 3	2636.50	41055	Mid-High	LTE Band 41	20	23.2	23.16	-0.02	0	00309	QPSK	1	99	0 mm	left	1:1.58	0.967	1.009	0.976	
Power Class 3	2680.00	41490	High	LTE Band 41	20	23.2	23.18	-0.02	0	00309	QPSK	1	50	0 mm	left	1:1.58	1.290	1.005	**1.296**	A10
Power Class 3	2506.00	39750	Low	LTE Band 41	20	22.2	22.11	-0.02	1	00309	QPSK	50	25	0 mm	left	1:1.58	0.505	1.021	0.516	
Power Class 3	2549.50	40185	Low-Mid	LTE Band 41	20	22.2	22.06	-0.03	1	00309	QPSK	50	25	0 mm	left	1:1.58	0.618	1.033	0.638	
Power Class 3	2593.00	40620	Mid	LTE Band 41	20	22.2	22.19	-0.02	1	00309	QPSK	50	25	0 mm	left	1:1.58	0.805	1.002	0.807	
Power Class 3	2636.50	41055	Mid-High	LTE Band 41	20	22.2	22.10	-0.04	1	00309	QPSK	50	50	0 mm	left	1:1.58	0.843	1.023	0.862	
Power Class 3	2680.00	41490	High	LTE Band 41	20	22.2	22.16	-0.04	1	00309	QPSK	50	0	0 mm	left	1:1.58	1.010	1.009	1.019	
Power Class 3	2636.50	41055	Mid-High	LTE Band 41	20	22.2	22.13	-0.05	1	00309	QPSK	100	0	0 mm	left	1:1.58	0.836	1.016	0.849	
Power Class 2	2680.00	41490	High	LTE Band 41	20	25.2	24.89	-0.14	0	00309	QPSK	1	50	0 mm	left	1:2.31	1.190	1.074	1.278	
Power Class 3	2636.50	41055	Mid-High	LTE Band 41	20	13.7	13.50	-0.14	0	00408	QPSK	1	99	0 mm	back	1:1.58	0.531	1.047	0.556	
Power Class 3	2506.00	39750	Low	LTE Band 41	20	13.7	13.16	-0.01	0	00408	QPSK	50	0	0 mm	back	1:1.58	0.561	1.132	0.635	
Power Class 3	2549.50	40185	Low-Mid	LTE Band 41	20	13.7	13.56	0.06	0	00408	QPSK	50	50	0 mm	back	1:1.58	0.609	1.033	0.629	
Power Class 3	2593.00	40620	Mid	LTE Band 41	20	13.7	13.63	0.18	0	00408	QPSK	50	25	0 mm	back	1:1.58	0.599	1.016	0.609	
Power Class 3	2636.50	41055	Mid-High	LTE Band 41	20	13.7	13.70	-0.18	0	00408	QPSK	50	50	0 mm	back	1:1.58	0.602	1.000	0.602	
Power Class 3	2680.00	41490	High	LTE Band 41	20	13.7	13.50	-0.14	0	00408	QPSK	50	25	0 mm	back	1:1.58	0.710	1.047	0.743	
Power Class 3	2636.50	41055	Mid-High	LTE Band 41	20	13.7	13.49	-0.17	0	00408	QPSK	100	0	0 mm	back	1:1.58	0.594	1.050	0.624	
Power Class 3	2636.50	41055	Mid-High	LTE Band 41	20	13.7	13.50	-0.03	0	00408	QPSK	1	99	0 mm	top	1:1.58	0.217	1.047	0.227	
Power Class 3	2636.50	41055	Mid-High	LTE Band 41	20	13.7	13.70	-0.03	0	00408	QPSK	50	50	0 mm	top	1:1.58	0.244	1.000	0.244	
Power Class 3	2680.00	41490	High	LTE Band 41	20	23.2	23.18	-0.02	0	00309	QPSK	1	50	0 mm	left	1:1.58	1.240	1.005	1.246	
ANSI / IEEE C95.1 1992 - SAFETY LIMIT Spatial Peak Uncontrolled Exposure/General Population									Body 1.6 W/kg (mW/g) averaged over 1 gram											

Note: Blue entry represents variability measurement.

© 2020 PCTEST All rights reserved. Unless otherwise specified, no part of this report may be reproduced or utilized in any part, form or by any means, electronic or mechanical, including photocopying and microfilm, without permission in writing from PCTEST. If you have any questions about this international copyright or have an enquiry about obtaining additional rights to this report or assembly of contents thereof, please contact INFO@PCTEST.COM.

Table 10-9
DTS Body SAR

MEASUREMENT RESULTS																		
FREQUENCY		Mode	Service	Bandwidth [MHz]	Maximum Allowed Power [dBm]	Conducted Power [dBm]	Power Drift [dB]	Spacing	Antenna Config.	Device Serial Number	Data Rate (Mbps)	Side	Duty Cycle (%)	SAR (1g)	Scaling Factor (Power)	Scaling Factor (Duty Cycle)	Reported SAR (1g)	Plot #
MHz	Ch.													(W/kg)			(W/kg)	
2412	1	802.11b	DSSS	22	20.0	19.34	-0.02	17 mm	1	02156	1	back	99.1	0.134	1.164	1.009	0.157	
2437	6	802.11b	DSSS	22	10.0	9.59	-0.05	0 mm	1	02156	1	back	99.1	0.387	1.099	1.009	**0.429**	A11
2412	1	802.11b	DSSS	22	20.0	19.34	-0.04	17 mm	1	02156	1	top	99.1	0.137	1.164	1.009	0.161	
2437	6	802.11b	DSSS	22	10.0	9.59	0.19	0 mm	1	02156	1	top	99.1	0.264	1.099	1.009	0.293	
2412	1	802.11b	DSSS	22	20.0	19.34	-0.19	0 mm	1	02156	1	right	99.1	0.207	1.164	1.009	0.243	
2412	1	802.11b	DSSS	22	20.0	19.34	0.15	0 mm	1	02156	1	left	99.1	0.108	1.164	1.009	0.127	
2437	6	802.11b	DSSS	22	17.0	16.34	0.00	17 mm	2	02156	1	back	99.1	0.033	1.164	1.009	0.039	
2412	1	802.11b	DSSS	22	7.0	6.49	-0.11	0 mm	2	02156	1	back	99.1	0.107	1.125	1.009	0.121	
2437	6	802.11b	DSSS	22	17.0	16.34	0.15	17 mm	2	02156	1	top	99.1	0.049	1.164	1.009	0.058	
2412	1	802.11b	DSSS	22	7.0	6.49	0.17	0 mm	2	02156	1	top	99.1	0.079	1.125	1.009	0.090	
2437	6	802.11b	DSSS	22	17.0	16.34	-0.04	0 mm	2	02156	1	right	99.1	0.128	1.164	1.009	0.150	
2437	6	802.11b	DSSS	22	17.0	16.34	-0.07	0 mm	2	02156	1	left	99.1	0.023	1.164	1.009	0.027	

ANSI / IEEE C95.1 1992 - SAFETY LIMIT	Body
Spatial Peak	1.6 W/kg (mW/g)
Uncontrolled Exposure/General Population	averaged over 1 gram

© 2020 PCTEST

REV 21.4 M
09/11/2019

© 2020 PCTEST All rights reserved. Unless otherwise specified, no part of this report may be reproduced or utilized in any part, form or by any means, electronic or mechanical, including photocopying and microfilm, without permission in writing from PCTEST. If you have any questions about this international copyright or have an enquiry about obtaining additional rights to this report or assembly of contents thereof, please contact INFO@PCTEST.COM.

Table 10-10
NII SISO BODY SAR

MEASUREMENT RESULTS																		
FREQUENCY		Mode	Service	Bandwidth [MHz]	Maximum Allowed Power [dBm]	Conducted Power [dBm]	Power Drift [dB]	Spacing	Antenna Config.	Device Serial Number	Data Rate (Mbps)	Side	Duty Cycle (%)	SAR (1g)	Scaling Factor (Power)	Scaling Factor (Duty Cycle)	Reported SAR (1g)	Plot #
MHz	Ch.													(W/kg)			(W/kg)	
5310	62	802.11n	OFDM	40	14.5	14.27	-0.10	17 mm	1	02156	13.5	back	92.3	0.020	1.054	1.083	0.023	
5270	54	802.11n	OFDM	40	7.5	6.82	-0.18	0 mm	1	02156	13.5	back	92.3	0.389	1.169	1.083	0.492	
5310	62	802.11n	OFDM	40	14.5	14.27	0.19	17 mm	1	02156	13.5	top	92.3	0.043	1.054	1.083	0.049	
5270	54	802.11n	OFDM	40	7.5	6.82	-0.14	0 mm	1	02156	13.5	top	92.3	0.217	1.169	1.083	0.275	
5310	62	802.11n	OFDM	40	14.5	14.27	-0.20	0 mm	1	02156	13.5	right	92.3	0.005	1.054	1.083	0.006	
5310	62	802.11n	OFDM	40	14.5	14.27	0.13	0 mm	1	02156	13.5	left	92.3	0.022	1.054	1.083	0.025	
5270	54	802.11n	OFDM	40	14.5	14.25	0.10	17 mm	2	02156	13.5	back	92.9	0.097	1.059	1.076	0.111	
5270	54	802.11n	OFDM	40	7.5	7.01	-0.16	0 mm	2	02156	13.5	back	92.9	0.272	1.119	1.076	0.327	
5270	54	802.11n	OFDM	40	14.5	14.25	0.14	17 mm	2	02156	13.5	top	92.9	0.135	1.059	1.076	0.154	
5270	54	802.11n	OFDM	40	7.5	7.01	-0.16	0 mm	2	02156	13.5	top	92.9	0.424	1.119	1.076	0.511	
5270	54	802.11n	OFDM	40	14.5	14.25	0.13	0 mm	2	02156	13.5	right	92.9	0.275	1.059	1.076	0.313	
5270	54	802.11n	OFDM	40	14.5	14.25	0.09	0 mm	2	02156	13.5	left	92.9	0.021	1.059	1.076	0.024	
5610	122	802.11ac	OFDM	80	13.5	12.52	0.05	17 mm	1	02156	29.3	back	91.1	0.028	1.253	1.098	0.039	
5510	102	802.11n	OFDM	40	7.5	6.52	-0.17	0 mm	1	02156	13.5	back	92.3	0.407	1.253	1.083	0.552	
5630	126	802.11n	OFDM	40	7.5	6.59	-0.10	0 mm	1	02156	13.5	back	92.3	0.497	1.233	1.083	**0.664**	
5710	142	802.11n	OFDM	40	7.5	6.31	-0.14	0 mm	1	02156	13.5	back	92.3	0.401	1.315	1.083	0.571	
5610	122	802.11ac	OFDM	80	13.5	12.52	-0.17	17 mm	1	02156	29.3	top	91.1	0.039	1.253	1.098	0.054	
5630	126	802.11n	OFDM	40	7.5	6.59	0.09	0 mm	1	02156	13.5	top	92.3	0.171	1.233	1.083	0.228	
5610	122	802.11ac	OFDM	80	13.5	12.52	0.18	0 mm	1	02156	29.3	right	91.1	0.024	1.253	1.098	0.033	
5610	122	802.11ac	OFDM	80	13.5	12.52	0.12	0 mm	1	02156	29.3	left	91.1	0.010	1.253	1.098	0.014	
5610	122	802.11ac	OFDM	80	13.5	13.44	0.16	17 mm	2	02156	29.3	back	92.3	0.071	1.014	1.083	0.078	
5710	142	802.11n	OFDM	40	7.5	7.43	-0.18	0 mm	2	02156	13.5	back	92.9	0.432	1.016	1.076	0.472	
5610	122	802.11ac	OFDM	80	13.5	13.44	0.08	17 mm	2	02156	29.3	top	92.3	0.088	1.014	1.083	0.097	
5510	102	802.11n	OFDM	40	7.5	7.40	-0.15	0 mm	2	02156	13.5	top	92.9	0.497	1.023	1.076	0.547	
5590	118	802.11n	OFDM	40	7.5	7.39	-0.14	0 mm	2	02156	13.5	top	92.9	0.491	1.026	1.076	0.542	
5710	142	802.11n	OFDM	40	7.5	7.43	-0.10	0 mm	2	02156	13.5	top	92.9	0.552	1.016	1.076	0.603	
5610	122	802.11ac	OFDM	80	13.5	13.44	0.14	0 mm	2	02156	29.3	right	92.3	0.253	1.014	1.083	0.278	
5610	122	802.11ac	OFDM	80	13.5	13.44	0.08	0 mm	2	02156	29.3	left	92.3	0.014	1.014	1.083	0.015	
5805	161	802.11a	OFDM	20	13.5	12.71	0.17	17 mm	1	02156	6	back	95.0	0.047	1.199	1.053	0.059	
5755	151	802.11n	OFDM	40	7.5	6.54	-0.11	0 mm	1	02156	13.5	back	92.3	0.475	1.247	1.083	0.641	
5805	161	802.11a	OFDM	20	13.5	12.71	0.15	17 mm	1	02156	6	top	95.0	0.061	1.199	1.053	0.077	
5755	151	802.11n	OFDM	40	7.5	6.54	0.18	0 mm	1	02156	13.5	top	92.3	0.148	1.247	1.083	0.200	
5805	161	802.11a	OFDM	20	13.5	12.71	-0.07	0 mm	1	02156	6	right	95.0	0.021	1.199	1.053	0.027	
5805	161	802.11a	OFDM	20	13.5	12.71	0.17	0 mm	1	02156	6	left	95.0	0.009	1.199	1.053	0.011	
5755	151	802.11n	OFDM	40	14.0	13.76	-0.15	17 mm	2	02156	13.5	back	92.9	0.086	1.057	1.076	0.098	
5755	151	802.11n	OFDM	40	7.5	7.49	-0.14	0 mm	2	02156	13.5	back	92.9	0.429	1.002	1.076	0.463	
5755	151	802.11n	OFDM	40	14.0	13.76	0.12	17 mm	2	02156	13.5	top	92.9	0.100	1.057	1.076	0.114	
5755	151	802.11n	OFDM	40	7.5	7.49	-0.13	0 mm	2	02156	13.5	top	92.9	0.553	1.002	1.076	0.596	
5755	151	802.11n	OFDM	40	14.0	13.76	0.18	0 mm	2	02156	13.5	right	92.9	0.196	1.057	1.076	0.223	
5755	151	802.11n	OFDM	40	14.0	13.76	-0.19	0 mm	2	02156	13.5	left	92.9	0.032	1.057	1.076	0.036	
ANSI / IEEE C95.1 1992 - SAFETY LIMIT Spatial Peak Uncontrolled Exposure/General Population										Body 1.6 W/kg (mW/g) averaged over 1 gram								

© 2020 PCTEST All rights reserved. Unless otherwise specified, no part of this report may be reproduced or utilized in any part, form or by any means, electronic or mechanical, including photocopying and microfilm, without permission in writing from PCTEST. If you have any questions about this international copyright or have an enquiry about obtaining additional rights to this report or assembly of contents thereof, please contact INFO@PCTEST.COM.

Table 10-11
NII MIMO BODY SAR

MEASUREMENT RESULTS																				
FREQUENCY		Mode	Service	Bandwidth [MHz]	Maximum Allowed Power (Ant 1) [dBm]	Conducted Power (Ant 1) [dBm]	Maximum Allowed Power (Ant 2) [dBm]	Conducted Power (Ant 2) [dBm]	Power Drift [dB]	Spacing	Antenna Config.	Device Serial Number	Data Rate (Mbps)	Side	Duty Cycle (%)	SAR (1g)	Scaling Factor (Power)	Scaling Factor (Duty Cycle)	Reported SAR (1g)	Plot #
MHz	Ch.															(W/kg)			(W/kg)	
5270	54	802.11n	OFDM	40	7.5	6.82	7.5	7.01	-0.15	0 mm	MIMO	02156	27	back	92.9	0.297	1.169	1.076	0.374	
5270	54	802.11n	OFDM	40	7.5	6.82	7.5	7.01	-0.19	0 mm	MIMO	02156	27	top	92.9	0.418	1.169	1.076	0.526	
5310	62	802.11n	OFDM	40	14.5	14.27	14.5	14.09	0.20	0 mm	MIMO	02156	27	right	92.9	0.307	1.099	1.076	0.363	
5310	62	802.11n	OFDM	40	14.5	14.27	14.5	14.09	0.16	0 mm	MIMO	02156	27	left	92.9	0.046	1.099	1.076	0.054	
5630	126	802.11n	OFDM	40	7.5	6.59	7.5	7.37	-0.14	0 mm	MIMO	02156	27	back	92.9	0.398	1.233	1.076	0.528	
5630	126	802.11n	OFDM	40	7.5	6.59	7.5	7.37	-0.13	0 mm	MIMO	02156	27	top	92.9	0.563	1.233	1.076	0.747	
5610	122	802.11ac	OFDM	80	13.5	12.52	13.5	13.44	0.02	0 mm	MIMO	02156	58.5	right	92.4	0.273	1.253	1.082	0.370	
5610	122	802.11ac	OFDM	80	13.5	12.52	13.5	13.44	0.14	0 mm	MIMO	2156	58.5	left	92.4	0.032	1.253	1.082	0.043	
5755	151	802.11n	OFDM	40	7.5	6.54	7.5	7.49	-0.13	0 mm	MIMO	02156	27	back	92.9	0.392	1.247	1.076	0.526	
5755	151	802.11n	OFDM	40	7.5	6.54	7.5	7.49	-0.16	0 mm	MIMO	02156	27	top	92.9	0.572	1.247	1.076	0.767	
5795	159	802.11n	OFDM	40	7.5	6.46	7.5	7.44	-0.02	0 mm	MIMO	02156	27	top	92.9	0.583	1.271	1.076	0.797	A12
5825	165	802.11n	OFDM	20	13.5	12.55	13.5	13.26	0.08	0 mm	MIMO	02156	13	right	94.5	0.195	1.245	1.058	0.257	
5825	165	802.11n	OFDM	20	13.5	12.55	13.5	13.26	0.06	0 mm	MIMO	02156	13	left	94.5	0.048	1.245	1.058	0.063	
ANSI / IEEE C95.1 1992 - SAFETY LIMIT Spatial Peak Uncontrolled Exposure/General Population												Body 1.6 W/kg (mW/g) averaged over 1 gram								

For channels 54, 126, 151, and 159 to achieve the 10.5 dBm maximum allowed MIMO power shown in the documentation, each antenna transmits at a maximum allowed power of 7.5 dBm. For channel 62 to achieve the 17.5 dBm maximum allowed MIMO power shown in the documentation, each antenna transmits at a maximum allowed power of 14.5 dBm. For channels 122 and 165 to achieve the 16.5 dBm maximum allowed MIMO power shown in the documentation, each antenna transmits at a maximum allowed power of 13.5 dBm.

Table 10-12
DSS BODY SAR

MEASUREMENT RESULTS																
FREQUENCY		Mode	Service	Maximum Allowed Power [dBm]	Conducted Power [dBm]	Power Drift [dB]	Spacing	Device Serial Number	Data Rate (Mbps)	Side	Duty Cycle (%)	SAR (1g)	Scaling Factor (Cond Power)	Scaling Factor (Duty Cycle)	Reported SAR (1g)	Plot #
MHz	Ch.											(W/kg)			(W/kg)	
2441	39	Bluetooth	FHSS	7.0	6.54	-0.01	0 mm	02156	1	back	77.6	0.157	1.112	1.289	**0.225**	A13
2441	39	Bluetooth	FHSS	7.0	6.54	-0.16	0 mm	02156	1	top	77.6	0.125	1.112	1.289	0.179	
2441	39	Bluetooth	FHSS	7.0	6.54	0.03	0 mm	02156	1	right	77.6	0.009	1.112	1.289	0.013	
2441	39	Bluetooth	FHSS	7.0	6.54	0.14	0 mm	02156	1	left	77.6	0.004	1.112	1.289	0.006	
ANSI / IEEE C95.1 1992 - SAFETY LIMIT Spatial Peak Uncontrolled Exposure/General Population								Body 1.6 W/kg (mW/g) averaged over 1 gram								

10.2 SAR Test Notes

General Notes:

1. The test data reported are the worst-case SAR values according to test procedures specified in FCC KDB Publication 616217 D04v01r02 and FCC KDB Publication 447498 D01v06.
2. Batteries are fully charged at the beginning of the SAR measurements.
3. Liquid tissue depth was at least 15.0 cm for all frequencies.
4. The manufacturer has confirmed that the device(s) tested have the same physical, mechanical and thermal characteristics and are within operational tolerances expected for production units.

© 2020 PCTEST All rights reserved. Unless otherwise specified, no part of this report may be reproduced or utilized in any part, form or by any means, electronic or mechanical, including photocopying and microfilm, without permission in writing from PCTEST. If you have any questions about this international copyright or have an enquiry about obtaining additional rights to this report or assembly of contents thereof, please contact INFO@PCTEST.COM.

5. SAR results were scaled to the maximum allowed power to demonstrate compliance per FCC KDB Publication 447498 D01v06.
6. Per FCC KDB 865664 D01v01r04, variability SAR tests were performed when the measured SAR results for a frequency band were greater than or equal to 0.8 W/kg. Repeated SAR measurements are highlighted in the tables above for clarity. Please see Section 12 for variability analysis.
7. FCC KDB Publication 616217 D04v01r02 Section 4.3, SAR tests are required for the back surface and edges of the tablet with the tablet touching the phantom. The SAR Exclusion Threshold in FCC KDB 447498 D01v06 was applied to determine SAR test exclusion for adjacent edge configurations.

UMTS Notes:

1. UMTS mode was tested under RMC 12.2 kbps with HSPA Inactive per KDB Publication 941225 D01v03r01. AMR and HSPA SAR was not required per the 3G Test Reduction Procedure in KDB Publication 941225 D01v03r01.
2. Per FCC KDB Publication 447498 D01v06, if the reported (scaled) SAR measured at the middle channel or highest output power channel for each test configuration is ≤ 0.8 W/kg for 1g evaluations then testing at the other channels is not required for such test configuration(s). When the maximum output power variation across the required test channels is > ½ dB, instead of the middle channel, the highest output power channel was used.

LTE Notes:

1. LTE test configurations are determined according to SAR Evaluation Considerations for LTE Devices in FCC KDB Publication 941225 D05v02r04. The general test procedures used for testing can be found in Section 7.5.4.
2. MPR is permanently implemented for this device by the manufacturer. The specific manufacturer target MPR is indicated alongside the SAR results. MPR is enabled for this device, according to 3GPP TS36.101 Section 6.2.3 – 6.2.5 under Table 6.2.3-1.
3. A-MPR was disabled for all SAR tests by setting NS=01 and MCC=001 on the base station simulator. SAR tests were performed with the same number of RB and RB offsets transmitting on all TTI frames (maximum TTI).
4. Per FCC KDB Publication 447498 D01v06, when the reported LTE Band 41 SAR measured at the highest output power channel in a given a test configuration was > 0.6 W/kg for 1g evaluations, testing at the other channels was required for such test configurations.
5. TDD LTE was tested per the guidance provided in FCC KDB Publication 941225 D05v02r04. Testing was performed using UL-DL configuration 0 with 6 UL subframes and 2 S subframes using extended cyclic prefix only and special subframe configuration 6. SAR tests were performed at maximum output power and worst-case transmission duty factor in extended cyclic prefix. Per 3GPP 36.211 Section 4, the duty factor for special subframe configuration 6 using extended cyclic prefix is 0.633.
6. Per KDB Publication 941225 D05Av01r02, SAR for downlink only LTE CA operations was not needed since the maximum average output power in LTE CA mode was not >0.25 dB higher than the maximum output power when downlink carrier aggregation was inactive.
7. This device supports Power Class 2 and Power Class 3 operations for LTE Band 41. The highest available duty cycle for Power Class 2 operations is 43.3 % using UL-DL configuration 1. Per FCC Guidance, all SAR tests were performed using Power Class 3. SAR with power class 2 at the available duty factor was additionally performed for the power class 3 configuration with the highest SAR configuration for each exposure conditions. Please see Section 13 for linearity results.

WLAN Notes:

1. Justification for test configurations for WLAN per KDB Publication 248227 D01v02r02 for 2.4 GHz WIFI single transmission chain operations, the highest measured maximum output power channel for DSSS was selected for SAR measurement. SAR for OFDM modes (2.4 GHz 802.11g/n) was not required due to

© 2020 PCTEST All rights reserved. Unless otherwise specified, no part of this report may be reproduced or utilized in any part, form or by any means, electronic or mechanical, including photocopying and microfilm, without permission in writing from PCTEST. If you have any questions about this international copyright or have an enquiry about obtaining additional rights to this report or assembly of contents thereof, please contact INFO@PCTEST.COM.

the maximum allowed powers and the highest reported DSSS SAR. See Section 7.6.4 for more information.

2. Justification for test configurations for WLAN per KDB Publication 248227 D01v02r02 for 5 GHz WIFI single transmission chain operations, the initial test configuration was selected according to the transmission mode with the highest maximum allowed powers. Other transmission modes were not investigated since the highest reported SAR for initial test configuration adjusted by the ratio of maximum output powers is less than 1.2 W/kg for 1g evaluations. See Section 7.6.5 for more information.
3. Per KDB Publication 248227 D01v02r02, SAR for MIMO was evaluated by following the simultaneous SAR provisions from KDB Publication 447498 D01v06 by either evaluating the sum of the 1g SAR values of each antenna transmitting independently or making a SAR measurement with both antennas transmitting simultaneously. Please see Section 11 for complete analysis.
4. When the maximum reported 1g averaged SAR is ≤0.8 W/kg, SAR testing on additional channels was not required. Otherwise, SAR for the next highest output power channel was required until the reported SAR result was ≤ 1.20 W/kg for 1g evaluations or all test channels were measured.
5. The device was configured to transmit continuously at the required data rate, channel bandwidth and signal modulation, using the highest transmission duty factor supported by the test mode tools. The reported SAR was scaled to the 100% transmission duty factor to determine compliance. Procedures used to measure the duty factor are identical to that in the associated EMC test reports.

Bluetooth Notes

1. Bluetooth SAR was measured with the device connected to a call box with hopping disabled with DH5 operation and Tx Tests test mode type. Per October 2016 TCB Workshop Notes, the reported SAR was scaled to the 100% transmission duty factor to determine compliance. See Section 8 for the time domain plot and calculation for the duty factor of the device.

© 2020 PCTEST All rights reserved. Unless otherwise specified, no part of this report may be reproduced or utilized in any part, form or by any means, electronic or mechanical, including photocopying and microfilm, without permission in writing from PCTEST. If you have any questions about this international copyright or have an enquiry about obtaining additional rights to this report or assembly of contents thereof, please contact INFO@PCTEST.COM.

11 FCC MULTI-TX AND ANTENNA SAR CONSIDERATIONS

11.1 Introduction

The following procedures adopted from FCC KDB Publication 447498 D01v06 are applicable to devices with built-in unlicensed transmitters such as 802.11 and Bluetooth devices which may simultaneously transmit with the licensed transmitter.

11.2 Simultaneous Transmission Procedures

This device contains transmitters that may operate simultaneously. Therefore, simultaneous transmission analysis is required. Per FCC KDB Publication 447498 D01v06 4.3.2 and IEEE 1528-2013 Section 6.3.4.1.2, simultaneous transmission SAR test exclusion may be applied when the sum of the 1g SAR for all the simultaneous transmitting antennas in a specific a physical test configuration is ≤1.6 W/kg. The different test positions in an exposure condition may be considered collectively to determine SAR test exclusion according to the sum of 1g.

When the antenna separation distance was > 50 mm, an estimated SAR of 0.4 W/kg was used to determine the simultaneous transmission SAR exclusion for test positions excluded per FCC KDB Publication 447498 D01v06.

11.3 Body Simultaneous Transmission Analysis

Table 11-1
Simultaneous Transmission Scenario with 2.4 GHz WLAN (Body at 1.7 cm)

Simult Tx	Configuration	UMTS 850 SAR (W/kg)	2.4 GHz WLAN Ant 1 at 17 mm SAR (W/kg)	2.4 GHz WLAN Ant 2 at 17 mm SAR (W/kg)	Σ SAR (W/kg)			Simult Tx	Configuration	UMTS 1750 SAR (W/kg)	2.4 GHz WLAN Ant 1 at 17 mm SAR (W/kg)	2.4 GHz WLAN Ant 2 at 17 mm SAR (W/kg)	Σ SAR (W/kg)		
		1	2	3	1+2	1+3	1+2+3			1	2	3	1+2	1+3	1+2+3
Body SAR	Back	0.625	0.157	0.039	0.782	0.664	0.821	Body SAR	Back	0.635	0.157	0.039	0.792	0.674	**0.831**
	Top	0.794	0.161	0.058	0.955	0.852	**1.013**		Top	0.530	0.161	0.058	0.691	0.588	0.749
Simult Tx	Configuration	UMTS 1900 SAR (W/kg)	2.4 GHz WLAN Ant 1 at 17 mm SAR (W/kg)	2.4 GHz WLAN Ant 2 at 17 mm SAR (W/kg)	Σ SAR (W/kg)			Simult Tx	Configuration	LTE Band 71 SAR (W/kg)	2.4 GHz WLAN Ant 1 at 17 mm SAR (W/kg)	2.4 GHz WLAN Ant 2 at 17 mm SAR (W/kg)	Σ SAR (W/kg)		
		1	2	3	1+2	1+3	1+2+3			1	2	3	1+2	1+3	1+2+3
Body SAR	Back	1.158	0.157	0.039	1.315	1.197	1.354	Body SAR	Back	0.507	0.157	0.039	0.664	0.546	**0.703**
	Top	1.214	0.161	0.058	1.375	1.272	**1.433**		Top	0.404	0.161	0.058	0.565	0.462	0.623
Simult Tx	Configuration	LTE Band 12 SAR (W/kg)	2.4 GHz WLAN Ant 1 at 17 mm SAR (W/kg)	2.4 GHz WLAN Ant 2 at 17 mm SAR (W/kg)	Σ SAR (W/kg)			Simult Tx	Configuration	LTE Band 13 SAR (W/kg)	2.4 GHz WLAN Ant 1 at 17 mm SAR (W/kg)	2.4 GHz WLAN Ant 2 at 17 mm SAR (W/kg)	Σ SAR (W/kg)		
		1	2	3	1+2	1+3	1+2+3			1	2	3	1+2	1+3	1+2+3
Body SAR	Back	0.466	0.157	0.039	0.623	0.505	**0.662**	Body SAR	Back	0.449	0.157	0.039	0.606	0.488	**0.645**
	Top	0.356	0.161	0.058	0.517	0.414	0.575		Top	0.290	0.161	0.058	0.451	0.348	0.509
Simult Tx	Configuration	LTE Band 26 (Cell) SAR (W/kg)	2.4 GHz WLAN Ant 1 at 17 mm SAR (W/kg)	2.4 GHz WLAN Ant 2 at 17 mm SAR (W/kg)	Σ SAR (W/kg)			Simult Tx	Configuration	LTE Band 66 (AWS) SAR (W/kg)	2.4 GHz WLAN Ant 1 at 17 mm SAR (W/kg)	2.4 GHz WLAN Ant 2 at 17 mm SAR (W/kg)	Σ SAR (W/kg)		
		1	2	3	1+2	1+3	1+2+3			1	2	3	1+2	1+3	1+2+3
Body SAR	Back	0.579	0.157	0.039	0.736	0.618	0.775	Body SAR	Back	0.638	0.157	0.039	0.795	0.677	**0.834**
	Top	0.701	0.161	0.058	0.862	0.759	**0.920**		Top	0.592	0.161	0.058	0.753	0.650	0.811
Simult Tx	Configuration	LTE Band 25 (PCS) SAR (W/kg)	2.4 GHz WLAN Ant 1 at 17 mm SAR (W/kg)	2.4 GHz WLAN Ant 2 at 17 mm SAR (W/kg)	Σ SAR (W/kg)			Simult Tx	Configuration	LTE Band 41 SAR (W/kg)	2.4 GHz WLAN Ant 1 at 17 mm SAR (W/kg)	2.4 GHz WLAN Ant 2 at 17 mm SAR (W/kg)	Σ SAR (W/kg)		
		1	2	3	1+2	1+3	1+2+3			1	2	3	1+2	1+3	1+2+3
Body SAR	Back	1.276	0.157	0.039	1.433	1.315	**1.472**	Body SAR	Back	0.211	0.157	0.039	0.368	0.250	0.407
	Top	1.067	0.161	0.058	1.228	1.125	1.286		Top	0.276	0.161	0.058	0.437	0.334	**0.495**

© 2020 PCTEST All rights reserved. Unless otherwise specified, no part of this report may be reproduced or utilized in any part, form or by any means, electronic or mechanical, including photocopying and microfilm, without permission in writing from PCTEST. If you have any questions about this international copyright or have an enquiry about obtaining additional rights to this report or assembly of contents thereof, please contact INFO@PCTEST.COM.

Table 11-2
Simultaneous Transmission Scenario with 2.4 GHz WLAN (Body at 0.0 cm)

Simult Tx	Configuration	UMTS 850 SAR (W/kg)	2.4 GHz WLAN Ant 1 at 0 mm SAR (W/kg)	2.4 GHz WLAN Ant 2 at 0 mm SAR (W/kg)	Σ SAR (W/kg)			Simult Tx	Configuration	UMTS 1750 SAR (W/kg)	2.4 GHz WLAN Ant 1 at 0 mm SAR (W/kg)	2.4 GHz WLAN Ant 2 at 0 mm SAR (W/kg)	Σ SAR (W/kg)		
		1	2	3	1+2	1+3	1+2+3			1	2	3	1+2	1+3	1+2+3
Body SAR	Back	0.883	0.429	0.121	1.312	1.004	**1.433**	Body SAR	Back	0.765	0.429	0.121	1.194	0.886	**1.315**
	Top	0.684	0.293	0.090	0.977	0.774	1.067		Top	0.541	0.293	0.090	0.834	0.631	0.924
	Right	0.174	0.243	0.150	0.417	0.324	0.567		Right	0.227	0.243	0.150	0.470	0.377	0.620
	Left	0.312	0.127	0.027	0.439	0.339	0.466		Left	0.845	0.127	0.027	0.972	0.872	0.999
Simult Tx	Configuration	UMTS 1900 SAR (W/kg)	2.4 GHz WLAN Ant 1 at 0 mm SAR (W/kg)	2.4 GHz WLAN Ant 2 at 0 mm SAR (W/kg)	Σ SAR (W/kg)			Simult Tx	Configuration	LTE Band 12 SAR (W/kg)	2.4 GHz WLAN Ant 1 at 0 mm SAR (W/kg)	2.4 GHz WLAN Ant 2 at 0 mm SAR (W/kg)	Σ SAR (W/kg)		
		1	2	3	1+2	1+3	1+2+3			1	2	3	1+2	1+3	1+2+3
Body SAR	Back	0.809	0.429	0.121	1.238	0.930	**1.359**	Body SAR	Back	0.707	0.429	0.121	1.136	0.828	**1.257**
	Top	0.244	0.293	0.090	0.537	0.334	0.627		Top	0.501	0.293	0.090	0.794	0.591	0.884
	Right	0.252	0.243	0.150	0.495	0.402	0.645		Right	0.144	0.243	0.150	0.387	0.294	0.537
	Left	0.620	0.127	0.027	0.747	0.647	0.774		Left	0.342	0.127	0.027	0.469	0.369	0.496
Simult Tx	Configuration	LTE Band 71 SAR (W/kg)	2.4 GHz WLAN Ant 1 at 0 mm SAR (W/kg)	2.4 GHz WLAN Ant 2 at 0 mm SAR (W/kg)	Σ SAR (W/kg)			Simult Tx	Configuration	LTE Band 26 (Cell) SAR (W/kg)	2.4 GHz WLAN Ant 1 at 0 mm SAR (W/kg)	2.4 GHz WLAN Ant 2 at 0 mm SAR (W/kg)	Σ SAR (W/kg)		
		1	2	3	1+2	1+3	1+2+3			1	2	3	1+2	1+3	1+2+3
Body SAR	Back	0.930	0.429	0.121	1.359	1.051	**1.480**	Body SAR	Back	0.824	0.429	0.121	1.253	0.945	**1.374**
	Top	0.707	0.293	0.090	1.000	0.797	1.090		Top	0.602	0.293	0.090	0.895	0.692	0.985
	Right	0.216	0.243	0.150	0.459	0.366	0.609		Right	0.171	0.243	0.150	0.414	0.321	0.564
	Left	0.308	0.127	0.027	0.435	0.335	0.462		Left	0.312	0.127	0.027	0.439	0.339	0.466
Simult Tx	Configuration	LTE Band 13 SAR (W/kg)	2.4 GHz WLAN Ant 1 at 0 mm SAR (W/kg)	2.4 GHz WLAN Ant 2 at 0 mm SAR (W/kg)	Σ SAR (W/kg)			Simult Tx	Configuration	LTE Band 25 (PCS) SAR (W/kg)	2.4 GHz WLAN Ant 1 at 0 mm SAR (W/kg)	2.4 GHz WLAN Ant 2 at 0 mm SAR (W/kg)	Σ SAR (W/kg)		
		1	2	3	1+2	1+3	1+2+3			1	2	3	1+2	1+3	1+2+3
Body SAR	Back	0.816	0.429	0.121	1.245	0.937	**1.366**	Body SAR	Back	0.846	0.429	0.121	1.275	0.967	**1.396**
	Top	0.609	0.293	0.090	0.902	0.699	0.992		Top	0.246	0.293	0.090	0.539	0.336	0.629
	Right	0.127	0.243	0.150	0.370	0.277	0.520		Right	0.182	0.243	0.150	0.425	0.332	0.575
	Left	0.325	0.127	0.027	0.452	0.352	0.479		Left	0.632	0.127	0.027	0.759	0.659	0.786
Simult Tx	Configuration	LTE Band 66 (AWS) SAR (W/kg)	2.4 GHz WLAN Ant 1 at 0 mm SAR (W/kg)	2.4 GHz WLAN Ant 2 at 0 mm SAR (W/kg)	Σ SAR (W/kg)			Simult Tx	Configuration	LTE Band 41 SAR (W/kg)	2.4 GHz WLAN Ant 1 at 0 mm SAR (W/kg)	2.4 GHz WLAN Ant 2 at 0 mm SAR (W/kg)	Σ SAR (W/kg)		
		1	2	3	1+2	1+3	1+2+3			1	2	3	1+2	1+3	1+2+3
Body SAR	Back	0.655	0.429	0.121	1.084	0.776	**1.205**	Body SAR	Back	0.743	0.429	0.121	1.172	0.864	1.293
	Top	0.499	0.293	0.090	0.792	0.589	0.882		Top	0.244	0.293	0.090	0.537	0.334	0.627
	Right	0.227	0.243	0.150	0.470	0.377	0.620		Right	0.400	0.243	0.150	0.643	0.550	0.793
	Left	1.044	0.127	0.027	1.171	1.071	1.198		Left	1.296	0.127	0.027	1.423	1.323	**1.450**

© 2020 PCTEST All rights reserved. Unless otherwise specified, no part of this report may be reproduced or utilized in any part, form or by any means, electronic or mechanical, including photocopying and microfilm, without permission in writing from PCTEST. If you have any questions about this international copyright or have an enquiry about obtaining additional rights to this report or assembly of contents thereof, please contact INFO@PCTEST.COM.

Table 11-3
Simultaneous Transmission Scenario with 5 GHz WLAN (Body at 1.7 cm)

Simult Tx	Configuration	UMTS 850 SAR (W/kg)	5 GHz WLAN Ant 1 at 17 mm SAR (W/kg)	5 GHz WLAN Ant 2 at 17 mm SAR (W/kg)	Σ SAR (W/kg)		
		1	2	3	1+2	1+3	1+2+3
Body SAR	Back	0.625	0.059	0.111	0.684	0.736	0.795
	Top	0.794	0.077	0.154	0.871	0.948	**1.025**

Simult Tx	Configuration	UMTS 1750 SAR (W/kg)	5 GHz WLAN Ant 1 at 17 mm SAR (W/kg)	5 GHz WLAN Ant 2 at 17 mm SAR (W/kg)	Σ SAR (W/kg)		
		1	2	3	1+2	1+3	1+2+3
Body SAR	Back	0.635	0.059	0.111	0.694	0.746	**0.805**
	Top	0.530	0.077	0.154	0.607	0.684	0.761

Simult Tx	Configuration	UMTS 1900 SAR (W/kg)	5 GHz WLAN Ant 1 at 17 mm SAR (W/kg)	5 GHz WLAN Ant 2 at 17 mm SAR (W/kg)	Σ SAR (W/kg)		
		1	2	3	1+2	1+3	1+2+3
Body SAR	Back	1.158	0.059	0.111	1.217	1.269	1.328
	Top	1.214	0.077	0.154	1.291	1.368	**1.445**

Simult Tx	Configuration	LTE Band 71 SAR (W/kg)	5 GHz WLAN Ant 1 at 17 mm SAR (W/kg)	5 GHz WLAN Ant 2 at 17 mm SAR (W/kg)	Σ SAR (W/kg)		
		1	2	3	1+2	1+3	1+2+3
Body SAR	Back	0.507	0.059	0.111	0.566	0.618	**0.677**
	Top	0.404	0.077	0.154	0.481	0.558	0.635

Simult Tx	Configuration	LTE Band 12 SAR (W/kg)	5 GHz WLAN Ant 1 at 17 mm SAR (W/kg)	5 GHz WLAN Ant 2 at 17 mm SAR (W/kg)	Σ SAR (W/kg)		
		1	2	3	1+2	1+3	1+2+3
Body SAR	Back	0.466	0.059	0.111	0.525	0.577	**0.636**
	Top	0.356	0.077	0.154	0.433	0.510	0.587

Simult Tx	Configuration	LTE Band 13 SAR (W/kg)	5 GHz WLAN Ant 1 at 17 mm SAR (W/kg)	5 GHz WLAN Ant 2 at 17 mm SAR (W/kg)	Σ SAR (W/kg)		
		1	2	3	1+2	1+3	1+2+3
Body SAR	Back	0.449	0.059	0.111	0.508	0.560	**0.619**
	Top	0.290	0.077	0.154	0.367	0.444	0.521

Simult Tx	Configuration	LTE Band 26 (Cell) SAR (W/kg)	5 GHz WLAN Ant 1 at 17 mm SAR (W/kg)	5 GHz WLAN Ant 2 at 17 mm SAR (W/kg)	Σ SAR (W/kg)		
		1	2	3	1+2	1+3	1+2+3
Body SAR	Back	0.579	0.059	0.111	0.638	0.690	0.749
	Top	0.701	0.077	0.154	0.778	0.855	**0.932**

Simult Tx	Configuration	LTE Band 66 (AWS) SAR (W/kg)	5 GHz WLAN Ant 1 at 17 mm SAR (W/kg)	5 GHz WLAN Ant 2 at 17 mm SAR (W/kg)	Σ SAR (W/kg)		
		1	2	3	1+2	1+3	1+2+3
Body SAR	Back	0.638	0.059	0.111	0.697	0.749	0.808
	Top	0.592	0.077	0.154	0.669	0.746	**0.823**

Simult Tx	Configuration	LTE Band 25 (PCS) SAR (W/kg)	5 GHz WLAN Ant 1 at 17 mm SAR (W/kg)	5 GHz WLAN Ant 2 at 17 mm SAR (W/kg)	Σ SAR (W/kg)		
		1	2	3	1+2	1+3	1+2+3
Body SAR	Back	1.276	0.059	0.111	1.335	1.387	**1.446**
	Top	1.067	0.077	0.154	1.144	1.221	1.298

Simult Tx	Configuration	LTE Band 41 SAR (W/kg)	5 GHz WLAN Ant 1 at 17 mm SAR (W/kg)	5 GHz WLAN Ant 2 at 17 mm SAR (W/kg)	Σ SAR (W/kg)		
		1	2	3	1+2	1+3	1+2+3
Body SAR	Back	0.211	0.059	0.111	0.270	0.322	0.381
	Top	0.276	0.077	0.154	0.353	0.430	**0.507**

© 2020 PCTEST All rights reserved. Unless otherwise specified, no part of this report may be reproduced or utilized in any part, form or by any means, electronic or mechanical, including photocopying and microfilm, without permission in writing from PCTEST. If you have any questions about this international copyright or have an enquiry about obtaining additional rights to this report or assembly of contents thereof, please contact INFO@PCTEST.COM.

Table 11-4
Simultaneous Transmission Scenario with 5 GHz WLAN (Body at 0.0 cm)

Simult Tx	Configuration	UMTS 850 SAR (W/kg)	5 GHz WLAN Ant 1 at 0 mm SAR (W/kg)	5 GHz WLAN Ant 2 at 0 mm SAR (W/kg)	Σ SAR (W/kg)	
		1	2	3	1+2	1+3
Body SAR	Back	0.883	0.664	0.472	**1.547**	1.355
	Top	0.684	0.275	0.603	0.959	1.287
	Right	0.174	0.033	0.313	0.207	0.487
	Left	0.312	0.025	0.036	0.337	0.348

Simult Tx	Configuration	UMTS 1750 SAR (W/kg)	5 GHz WLAN Ant 1 at 0 mm SAR (W/kg)	5 GHz WLAN Ant 2 at 0 mm SAR (W/kg)	Σ SAR (W/kg)	
		1	2	3	1+2	1+3
Body SAR	Back	0.765	0.664	0.472	**1.429**	1.237
	Top	0.541	0.275	0.603	0.816	1.144
	Right	0.227	0.033	0.313	0.260	0.540
	Left	0.845	0.025	0.036	0.870	0.881

Simult Tx	Configuration	UMTS 1900 SAR (W/kg)	5 GHz WLAN Ant 1 at 0 mm SAR (W/kg)	5 GHz WLAN Ant 2 at 0 mm SAR (W/kg)	Σ SAR (W/kg)	
		1	2	3	1+2	1+3
Body SAR	Back	0.809	0.664	0.472	**1.473**	1.281
	Top	0.244	0.275	0.603	0.519	0.847
	Right	0.252	0.033	0.313	0.285	0.565
	Left	0.620	0.025	0.036	0.645	0.656

Simult Tx	Configuration	LTE Band 71 SAR (W/kg)	5 GHz WLAN Ant 1 at 0 mm SAR (W/kg)	5 GHz WLAN Ant 2 at 0 mm SAR (W/kg)	Σ SAR (W/kg)	
		1	2	3	1+2	1+3
Body SAR	Back	0.930	0.664	0.472	**1.594**	1.402
	Top	0.707	0.275	0.603	0.982	1.310
	Right	0.216	0.033	0.313	0.249	0.529
	Left	0.308	0.025	0.036	0.333	0.344

Simult Tx	Configuration	LTE Band 12 SAR (W/kg)	5 GHz WLAN Ant 1 at 0 mm SAR (W/kg)	5 GHz WLAN Ant 2 at 0 mm SAR (W/kg)	Σ SAR (W/kg)	
		1	2	3	1+2	1+3
Body SAR	Back	0.707	0.664	0.472	**1.371**	1.179
	Top	0.501	0.275	0.603	0.776	1.104
	Right	0.144	0.033	0.313	0.177	0.457
	Left	0.342	0.025	0.036	0.367	0.378

Simult Tx	Configuration	LTE Band 13 SAR (W/kg)	5 GHz WLAN Ant 1 at 0 mm SAR (W/kg)	5 GHz WLAN Ant 2 at 0 mm SAR (W/kg)	Σ SAR (W/kg)	
		1	2	3	1+2	1+3
Body SAR	Back	0.816	0.664	0.472	**1.480**	1.288
	Top	0.609	0.275	0.603	0.884	1.212
	Right	0.127	0.033	0.313	0.160	0.440
	Left	0.325	0.025	0.036	0.350	0.361

Simult Tx	Configuration	LTE Band 26 (Cell) SAR (W/kg)	5 GHz WLAN Ant 1 at 0 mm SAR (W/kg)	5 GHz WLAN Ant 2 at 0 mm SAR (W/kg)	Σ SAR (W/kg)	
		1	2	3	1+2	1+3
Body SAR	Back	0.824	0.664	0.472	**1.488**	1.296
	Top	0.602	0.275	0.603	0.877	1.205
	Right	0.171	0.033	0.313	0.204	0.484
	Left	0.312	0.025	0.036	0.337	0.348

Simult Tx	Configuration	LTE Band 66 (AWS) SAR (W/kg)	5 GHz WLAN Ant 1 at 0 mm SAR (W/kg)	5 GHz WLAN Ant 2 at 0 mm SAR (W/kg)	Σ SAR (W/kg)	
		1	2	3	1+2	1+3
Body SAR	Back	0.655	0.664	0.472	**1.319**	1.127
	Top	0.499	0.275	0.603	0.774	1.102
	Right	0.227	0.033	0.313	0.260	0.540
	Left	1.044	0.025	0.036	1.069	1.080

Simult Tx	Configuration	LTE Band 25 (PCS) SAR (W/kg)	5 GHz WLAN Ant 1 at 0 mm SAR (W/kg)	5 GHz WLAN Ant 2 at 0 mm SAR (W/kg)	Σ SAR (W/kg)	
		1	2	3	1+2	1+3
Body SAR	Back	0.846	0.664	0.472	**1.510**	1.318
	Top	0.246	0.275	0.603	0.521	0.849
	Right	0.182	0.033	0.313	0.215	0.495
	Left	0.632	0.025	0.036	0.657	0.668

Simult Tx	Configuration	LTE Band 41 SAR (W/kg)	5 GHz WLAN Ant 1 at 0 mm SAR (W/kg)	5 GHz WLAN Ant 2 at 0 mm SAR (W/kg)	Σ SAR (W/kg)	
		1	2	3	1+2	1+3
Body SAR	Back	0.743	0.664	0.472	**1.407**	1.215
	Top	0.244	0.275	0.603	0.519	0.847
	Right	0.400	0.033	0.313	0.433	0.713
	Left	1.296	0.025	0.036	1.321	1.332

© 2020 PCTEST All rights reserved. Unless otherwise specified, no part of this report may be reproduced or utilized in any part, form or by any means, electronic or mechanical, including photocopying and microfilm, without permission in writing from PCTEST. If you have any questions about this international copyright or have an enquiry about obtaining additional rights to this report or assembly of contents thereof, please contact INFO@PCTEST.COM.

Simult Tx	Configuration	UMTS 850 SAR (W/kg)	5 GHz WLAN MIMO at 0 mm SAR (W/kg)	Σ SAR (W/kg)	Simult Tx	Configuration	UMTS 1750 SAR (W/kg)	5 GHz WLAN MIMO at 0 mm SAR (W/kg)	Σ SAR (W/kg)
		1	2	1+2			1	2	1+2
Body SAR	Back	0.883	0.528	1.411	Body SAR	Back	0.765	0.528	1.293
	Top	0.684	0.797	**1.481**		Top	0.541	0.797	**1.338**
	Right	0.174	0.370	0.544		Right	0.227	0.370	0.597
	Left	0.312	0.063	0.375		Left	0.845	0.063	0.908

Simult Tx	Configuration	UMTS 1900 SAR (W/kg)	5 GHz WLAN MIMO at 0 mm SAR (W/kg)	Σ SAR (W/kg)	Simult Tx	Configuration	LTE Band 12 SAR (W/kg)	5 GHz WLAN MIMO at 0 mm SAR (W/kg)	Σ SAR (W/kg)
		1	2	1+2			1	2	1+2
Body SAR	Back	0.809	0.528	**1.337**	Body SAR	Back	0.707	0.528	1.235
	Top	0.244	0.797	1.041		Top	0.501	0.797	**1.298**
	Right	0.252	0.370	0.622		Right	0.144	0.370	0.514
	Left	0.620	0.063	0.683		Left	0.342	0.063	0.405

Simult Tx	Configuration	LTE Band 71 SAR (W/kg)	5 GHz WLAN MIMO at 0 mm SAR (W/kg)	Σ SAR (W/kg)	Simult Tx	Configuration	LTE Band 26 (Cell) SAR (W/kg)	5 GHz WLAN MIMO at 0 mm SAR (W/kg)	Σ SAR (W/kg)
		1	2	1+2			1	2	1+2
Body SAR	Back	0.930	0.528	1.458	Body SAR	Back	0.824	0.528	1.352
	Top	0.707	0.797	**1.504**		Top	0.602	0.797	**1.399**
	Right	0.216	0.370	0.586		Right	0.171	0.370	0.541
	Left	0.308	0.063	0.371		Left	0.312	0.063	0.375

Simult Tx	Configuration	LTE Band 13 SAR (W/kg)	5 GHz WLAN MIMO at 0 mm SAR (W/kg)	Σ SAR (W/kg)	Simult Tx	Configuration	LTE Band 25 (PCS) SAR (W/kg)	5 GHz WLAN MIMO at 0 mm SAR (W/kg)	Σ SAR (W/kg)
		1	2	1+2			1	2	1+2
Body SAR	Back	0.816	0.528	1.344	Body SAR	Back	0.846	0.528	**1.374**
	Top	0.609	0.797	**1.406**		Top	0.246	0.797	1.043
	Right	0.127	0.370	0.497		Right	0.182	0.370	0.552
	Left	0.325	0.063	0.388		Left	0.632	0.063	0.695

Simult Tx	Configuration	LTE Band 66 (AWS) SAR (W/kg)	5 GHz WLAN MIMO at 0 mm SAR (W/kg)	Σ SAR (W/kg)	Simult Tx	Configuration	LTE Band 41 SAR (W/kg)	5 GHz WLAN MIMO at 0 mm SAR (W/kg)	Σ SAR (W/kg)
		1	2	1+2			1	2	1+2
Body SAR	Back	0.655	0.528	1.183	Body SAR	Back	0.743	0.528	1.271
	Top	0.499	0.797	**1.296**		Top	0.244	0.797	1.041
	Right	0.227	0.370	0.597		Right	0.400	0.370	0.770
	Left	1.044	0.063	1.107		Left	1.296	0.063	**1.359**

© 2020 PCTEST All rights reserved. Unless otherwise specified, no part of this report may be reproduced or utilized in any part, form or by any means, electronic or mechanical, including photocopying and microfilm, without permission in writing from PCTEST. If you have any questions about this international copyright or have an enquiry about obtaining additional rights to this report or assembly of contents thereof, please contact INFO@PCTEST.COM.

Table 11-5
Simultaneous Transmission Scenario with Bluetooth

Exposure Condition	Mode	3G/4G SAR (W/kg)	Bluetooth SAR (W/kg)	Σ SAR (W/kg)
		1	2	1+2
Body SAR	UMTS 850	0.883	0.225	1.108
	UMTS 1750	0.845	0.225	1.070
	UMTS 1900	1.214	0.225	1.439
	LTE Band 71	0.930	0.225	1.155
	LTE Band 12	0.707	0.225	0.932
	LTE Band 13	0.816	0.225	1.041
	LTE Band 26 (Cell)	0.824	0.225	1.049
	LTE Band 66 (AWS)	1.044	0.225	1.269
	LTE Band 25 (PCS)	1.276	0.225	1.501
	LTE Band 41	1.296	0.225	**1.521**

Note: For SAR summation, the highest reported SAR across all test distances was used as the most conservative evaluation for simultaneous transmission analysis for each device edge.

11.4 Simultaneous Transmission Conclusion

The above numerical summed SAR results for all the worst-case simultaneous transmission conditions were below the SAR limit. Therefore, the above analysis is sufficient to determine that simultaneous transmission cases will not exceed the SAR limit and therefore no measured volumetric simultaneous SAR summation is required per FCC KDB Publication 447498 D01v06 and IEEE 1528-2013 Section 6.3.4.1.2.

© 2020 PCTEST All rights reserved. Unless otherwise specified, no part of this report may be reproduced or utilized in any part, form or by any means, electronic or mechanical, including photocopying and microfilm, without permission in writing from PCTEST. If you have any questions about this international copyright or have an enquiry about obtaining additional rights to this report or assembly of contents thereof, please contact INFO@PCTEST.COM.

12 SAR MEASUREMENT VARIABILITY

12.1 Measurement Variability

Per FCC KDB Publication 865664 D01v01r04, SAR measurement variability was assessed for each frequency band, which was determined by the SAR probe calibration point and tissue-equivalent medium used for the device measurements. When both head and body tissue-equivalent media were required for SAR measurements in a frequency band, the variability measurement procedures were applied to the tissue medium with the highest measured SAR, using the highest measured SAR configuration for that tissue-equivalent medium. These additional measurements were repeated after the completion of all measurements requiring the same head or body tissue-equivalent medium in a frequency band. The test device was returned to ambient conditions (normal room temperature) with the battery fully charged before it was re-mounted on the device holder for the repeated measurement(s) to minimize any unexpected variations in the repeated results.

SAR Measurement Variability was assessed using the following procedures for each frequency band:

1) When the original highest measured SAR is ≥ 0.80 W/kg, the measurement was repeated once.
2) A second repeated measurement was performed only if the ratio of largest to smallest SAR for the original and first repeated measurements was > 1.20 or when the original or repeated measurement was ≥ 1.45 W/kg (~ 10% from the 1g SAR limit).
3) A third repeated measurement was performed only if the original, first or second repeated measurement was ≥ 1.5 W/kg and the ratio of largest to smallest SAR for the original, first and second repeated measurements is > 1.20.
4) Repeated measurements are not required when the original highest measured SAR is < 0.80 W/kg

Table 12-1
Body SAR Measurement Variability Results

BODY VARIABILITY RESULTS															
Band	FREQUENCY		Mode	Service	# of Time Slots	Data Rate (Mbps)	Side	Spacing	Measured SAR (1g)	1st Repeated SAR (1g)	Ratio	2nd Repeated SAR (1g)	Ratio	3rd Repeated SAR (1g)	Ratio
	MHz	Ch.							(W/kg)	(W/kg)		(W/kg)		(W/kg)	
835	826.40	4132	UMTS 850	RMC	N/A	N/A	back	0 mm	0.883	0.865	1.02	N/A	N/A	N/A	N/A
750	#N/A	133297	LTE Band 71, 20 MHz Bandwidth	QPSK, 1 RB, 0 RB Offset	N/A	N/A	back	0 mm	0.890	0.850	1.05	N/A	N/A	N/A	N/A
1750	1770.00	132572	LTE Band 66 (AWS), 20 MHz Bandwidth	QPSK, 1 RB, 99 RB Offset	N/A	N/A	left	0 mm	0.937	0.932	1.01	N/A	N/A	N/A	N/A
1900	1905.00	26590	LTE Band 25 (PCS), 20 MHz Bandwidth	QPSK, 1 RB, 0 RB Offset	N/A	N/A	back	17 mm	1.190	1.090	1.09	N/A	N/A	N/A	N/A
2600	2680.00	41490	LTE Band 41, 20 MHz Bandwidth	QPSK, 1 RB, 50 RB Offset	N/A	N/A	left	0 mm	1.290	1.240	1.04	N/A	N/A	N/A	N/A
ANSI / IEEE C95.1 1992 - SAFETY LIMIT Spatial Peak Uncontrolled Exposure/General Population									Body 1.6 W/kg (mW/g) averaged over 1 gram						

12.2 Measurement Uncertainty

The measured SAR was <1.5 W/kg for 1g for all frequency bands. Therefore, per KDB Publication 865664 D01v01r04, the extended measurement uncertainty analysis per IEEE 1528-2013 was not required.

© 2020 PCTEST All rights reserved. Unless otherwise specified, no part of this report may be reproduced or utilized in any part, form or by any means, electronic or mechanical, including photocopying and microfilm, without permission in writing from PCTEST. If you have any questions about this international copyright or have an enquiry about obtaining additional rights to this report or assembly of contents thereof, please contact INFO@PCTEST.COM.

13 ADDITIONAL TESTING PER FCC GUIDANCE

13.1 LTE Band 41 Power Class 2 and Power Class 3 Linearity

This device supports Power Class 2 and Power Class 3 operations for LTE Band 41. The highest available duty cycle for Power Class 2 operations is 43.3 % using UL-DL configuration 1. Per May 2017 TCB Workshop Notes based on the device behavior, all SAR tests were performed using Power Class 3. SAR with Power Class 2 at the highest power and available duty factor was additionally performed for the Power Class 3 configuration with the highest SAR for each exposure condition. The linearity between the Power Class 2 and Power Class 3 SAR results and the respective frame averaged powers was calculated to determine that the results were linear.
Per May 2017 TCB Workshop, no additional SAR measurements were required since the linearity between power classes was < 10% and all reported SAR values were < 1.4 W/kg for 1g.

LTE Band 41 SAR testing with power class 2 at the highest power and available duty factor was additionally performed for the power class 3 configuration with the highest SAR for each exposure condition.

Table 13-1
LTE Band 41 Body Linearity Data

	LTE Band 41 PC3	LTE Band 41 PC2
Maximum Allowed Output Power (dBm)	23.2	25.2
Measured Output Power (dBm)	23.18	24.89
Measured SAR (W/kg)	1.29	1.19
Measured Power (mW)	207.97	308.32
Duty Cycle	63.3%	43.3%
Frame Averaged Output Power (mW)	131.64	133.50
% deviation from expected linearity		-9.04%

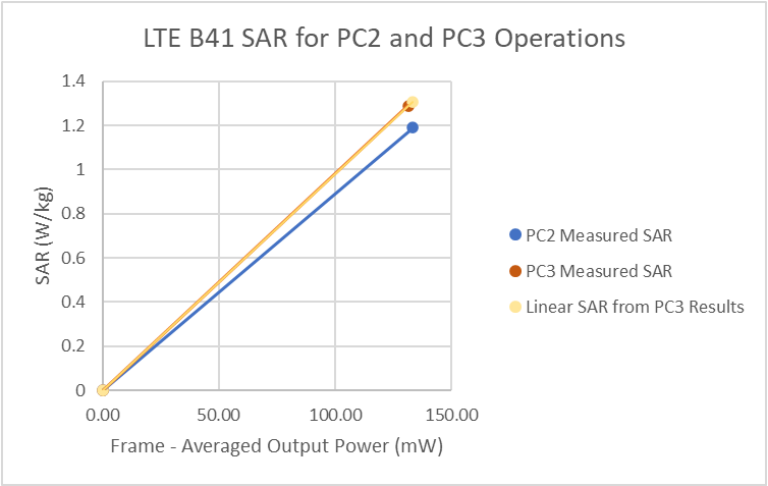

Figure 13-1
LTE Band 41 Body-Worn Linearity

© 2020 PCTEST All rights reserved. Unless otherwise specified, no part of this report may be reproduced or utilized in any part, form or by any means, electronic or mechanical, including photocopying and microfilm, without permission in writing from PCTEST. If you have any questions about this international copyright or have an enquiry about obtaining additional rights to this report or assembly of contents thereof, please contact INFO@PCTEST.COM.

14 EQUIPMENT LIST

Manufacturer	Model	Description	Cal Date	Cal Interval	Cal Due	Serial Number
Agilent	8594A	(9kHz-2.9GHz) Spectrum Analyzer	CBT	N/A	CBT	3051A00187
Agilent	E4438C	ESG Vector Signal Generator	3/8/2019	Biennial	3/8/2021	MY42082385
Agilent	E4438C	ESG Vector Signal Generator	3/11/2019	Biennial	3/11/2021	MY45090700
Agilent	N9020A	MXA Signal Analyzer	4/20/2019	Annual	4/20/2020	US46470561
Agilent	N5182A	MXG Vector Signal Generator	7/10/2019	Annual	7/10/2020	MY47420800
Agilent	N9030A	PXA Signal Analyzer (44GHz)	6/12/2019	Annual	6/12/2020	MY52350166
Agilent	8753ES	S-Parameter Network Analyzer	8/26/2019	Annual	8/26/2020	MY40000670
Agilent	8753ES	S-Parameter Vector Network Analyzer	9/19/2019	Annual	9/19/2020	MY40003841
Agilent	E5515C	Wireless Communications Test Set	9/25/2019	Annual	9/25/2020	GB43304278
Agilent	E5515C	Wireless Communications Test Set	2/7/2018	Triennial	2/7/2021	GB43304447
Agilent	E5515C	Wireless Communications Test Set	6/26/2019	Annual	6/26/2020	MY50267125
Agilent	N4010A	Wireless Connectivity Test Set	CBT	N/A	CBT	GB44450273
Amplifier Research	1551G6	Amplifier	CBT	N/A	CBT	353317
Amplifier Research	1551G6	Amplifier	CBT	N/A	CBT	353468
Amplifier Research	1551G6	Amplifier	CBT	N/A	CBT	353469
Anritsu	MA2411B	Pulse Power Sensor	6/11/2019	Annual	6/11/2020	1207364
Anritsu	MA2411B	Pulse Power Sensor	8/8/2019	Annual	8/8/2020	1339008
Anritsu	MA2411B	Pulse Power Sensor	3/6/2019	Annual	3/6/2020	1339018
Anritsu	MT8820C	Radio Communication Analyzer	3/29/2019	Annual	3/29/2020	6201300731
Anritsu	MT8821C	Radio Communication Analyzer	3/6/2019	Annual	3/6/2020	6201381794
Anritsu	MT8862A	Wireless Connectivity Test Set	8/8/2019	Annual	8/8/2020	6261782395
Anritsu	MA24106A	USB Power Sensor	5/22/2019	Annual	5/22/2020	1231535
Anritsu	MA24106A	USB Power Sensor	5/6/2019	Annual	5/6/2020	1231538
Anritsu	ML2496A	Power Meter	10/29/2019	Annual	10/29/2020	1840005
Control Company	4352	Long Stem Thermometer	6/26/2019	Biennial	6/26/2021	192282739
Control Company	4352	Long Stem Thermometer	6/26/2019	Biennial	6/26/2021	192282744
Control Company	4040	Therm./ Clock/ Humidity Monitor	10/9/2018	Biennial	10/9/2020	181647802
Control Company	4040	Therm./ Clock/ Humidity Monitor	10/9/2018	Biennial	10/9/2020	181647811
Control Company	4352	Ultra Long Stem Thermometer	11/29/2018	Biennial	11/29/2020	181766777
Keysight	772D	Dual Directional Coupler	CBT	N/A	CBT	MY52180215
Keysight Technologies	N6705B	DC Power Analyzer	4/27/2019	Biennial	4/27/2021	MY53004059
Keysight Technologies	85033E	Standard Mechanical Calibration Kit (DC to 9GHz, 3.5mm)	7/2/2019	Annual	7/2/2020	MY53401181
MCL	BW-N6W5+	6dB Attenuator	CBT	N/A	CBT	1139
Mini Circuits	PWR-SEN-4GHS	USB Power Sensor	4/19/2019	Annual	4/19/2020	11401010036
MiniCircuits	VLF-6000+	Low Pass Filter	CBT	N/A	CBT	N/A
MiniCircuits	VLF-6000+	Low Pass Filter	CBT	N/A	CBT	N/A
MiniCircuits	SLP-2400+	Low Pass Filter	CBT	N/A	CBT	R8979500903
Mini-Circuits	NLP-1200+	Low Pass Filter DC to 1000 MHz	CBT	N/A	CBT	N/A
Mini-Circuits	NLP-2950+	Low Pass Filter DC to 2700 MHz	CBT	N/A	CBT	N/A
Mini-Circuits	BW-N20W5	Power Attenuator	CBT	N/A	CBT	1226
Mitutoyo	CD-6"CSX	Digital Caliper	4/18/2018	Biennial	4/18/2020	13264165
Pasternack	PE2208-6	Bidirectional Coupler	CBT	N/A	CBT	N/A
Pasternack	PE2209-10	Bidirectional Coupler	CBT	N/A	CBT	N/A
Pasternack	NC-100	Torque Wrench	5/23/2018	Biennial	5/23/2020	N/A
Rohde & Schwarz	CMU200	Base Station Simulator	6/3/2019	Annual	6/3/2020	109892
Rohde & Schwarz	CMW500	Radio Communication Tester	8/26/2019	Annual	8/26/2020	100976
Rohde & Schwarz	CMW500	Radio Communication Tester	10/15/2019	Annual	10/15/2020	109366
Rohde & Schwarz	CMW500	Radio Communication Tester	6/26/2019	Annual	6/26/2020	112347
Rohde & Schwarz	CMW500	Radio Communication Tester	8/27/2019	Annual	8/27/2020	116743
Rohde & Schwarz	CMW500	Radio Communication Tester	4/19/2019	Annual	4/19/2020	128633
Rohde & Schwarz	ZNLE6	Vector Network Analyzer	10/11/2019	Annual	10/11/2020	101307
Seekonk	NC-100	Torque Wrench	4/18/2018	Biennial	4/18/2020	N/A
SPEAG	D1750V2	1750 MHz SAR Dipole	5/15/2019	Annual	5/15/2020	1148
SPEAG	D1900V2	1900 MHz SAR Dipole	10/23/2018	Biennial	10/23/2020	5d080
SPEAG	D1900V2	1900 MHz SAR Dipole	2/21/2019	Annual	2/21/2020	5d148
SPEAG	D2450V2	2450 MHz SAR Dipole	9/11/2017	Triennial	9/11/2020	797
SPEAG	D2450V2	2450 MHz SAR Dipole	8/16/2018	Biennial	8/16/2020	981
SPEAG	D2600V2	2600 MHz SAR Dipole	4/11/2018	Biennial	4/11/2020	1004
SPEAG	D5GHzV2	5 GHz SAR Dipole	1/16/2018	Triennial	1/16/2021	1057
SPEAG	D750V3	750 MHz Dipole	3/18/2019	Annual	3/18/2020	1054
SPEAG	D750V3	750 MHz SAR Dipole	1/15/2018	Triennial	1/15/2021	1003
SPEAG	D835V2	835 MHz SAR Dipole	3/13/2019	Annual	3/13/2020	4d047
SPEAG	D835V2	835 MHz SAR Dipole	1/13/2020	Annual	1/13/2021	4d132
SPEAG	DAE4	Dasy Data Acquisition Electronics	1/13/2020	Annual	1/13/2021	1558
SPEAG	DAE4	Dasy Data Acquisition Electronics	5/8/2019	Annual	5/8/2020	728
SPEAG	DAE4	Dasy Data Acquisition Electronics	9/12/2019	Annual	9/12/2020	1449
SPEAG	DAE4	Dasy Data Acquisition Electronics	7/11/2019	Annual	7/11/2020	1322
SPEAG	DAE4	Dasy Data Acquisition Electronics	7/11/2019	Annual	7/11/2020	1323
SPEAG	DAE4	Dasy Data Acquisition Electronics	9/17/2019	Annual	9/17/2020	1333
SPEAG	DAE4	Dasy Data Acquisition Electronics	6/20/2019	Annual	6/20/2020	1334
SPEAG	DAE4	Dasy Data Acquisition Electronics	4/18/2019	Annual	4/18/2020	1407
SPEAG	DAE4	Data Acquisition Electronics	12/5/2019	Annual	12/5/2020	1533
SPEAG	DAK-3.5	Dielectric Assessment Kit	10/22/2019	Annual	10/22/2020	1091
SPEAG	EX3DV4	SAR Probe	5/16/2019	Annual	5/16/2020	7406
SPEAG	EX3DV4	SAR Probe	6/19/2019	Annual	6/19/2020	7409
SPEAG	EX3DV4	SAR Probe	7/15/2019	Annual	7/15/2020	7547
SPEAG	EX3DV4	SAR Probe	1/21/2020	Annual	1/21/2021	3589
SPEAG	EX3DV4	SAR Probe	4/24/2019	Annual	4/24/2020	7357
SPEAG	EX3DV4	SAR Probe	9/19/2019	Annual	9/19/2020	7552
SPEAG	EX3DV4	SAR Probe	9/19/2019	Annual	9/19/2020	7551
SPEAG	EX3DV4	SAR Probe	12/11/2019	Annual	12/11/2020	7571
SPEAG	EX3DV4	SAR Probe	7/16/2019	Annual	7/16/2020	7410

Note: CBT (Calibrated Before Testing). Prior to testing, the measurement paths containing a cable, amplifier, attenuator, coupler or filter were connected to a calibrated source (i.e. a signal generator) to determine the losses of the measurement path. The power meter offset was then adjusted to compensate for the measurement system losses. This level offset is stored within the power meter before measurements are made. This calibration verification procedure applies to the system verification and output power measurements. The calibrated reading is then taken directly from the power meter after compensation of the losses for all final power measurements.

© 2020 PCTEST All rights reserved. Unless otherwise specified, no part of this report may be reproduced or utilized in any part, form or by any means, electronic or mechanical, including photocopying and microfilm, without permission in writing from PCTEST. If you have any questions about this international copyright or have an enquiry about obtaining additional rights to this report or assembly of contents thereof, please contact INFO@PCTEST.COM.

15 MEASUREMENT UNCERTAINTIES

a	c	d	e= f(d,k)	f	g	h = c x f/e	i = c x g/e	k
Uncertainty Component	**Tol. (± %)**	**Prob. Dist.**	**Div.**	**c_i 1gm**	**c_i 10 gms**	**1gm u_i (± %)**	**10gms u_i (± %)**	**v_i**
Measurement System								
Probe Calibration	6.55	N	1	1.0	1.0	6.6	6.6	∞
Axial Isotropy	0.25	N	1	0.7	0.7	0.2	0.2	∞
Hemishperical Isotropy	1.3	N	1	0.7	0.7	0.9	0.9	∞
Boundary Effect	2.0	R	1.73	1.0	1.0	1.2	1.2	∞
Linearity	0.3	N	1	1.0	1.0	0.3	0.3	∞
System Detection Limits	0.25	R	1.73	1.0	1.0	0.1	0.1	∞
Readout Electronics	0.3	N	1	1.0	1.0	0.3	0.3	∞
Response Time	0.8	R	1.73	1.0	1.0	0.5	0.5	∞
Integration Time	2.6	R	1.73	1.0	1.0	1.5	1.5	∞
RF Ambient Conditions - Noise	3.0	R	1.73	1.0	1.0	1.7	1.7	∞
RF Ambient Conditions - Reflections	3.0	R	1.73	1.0	1.0	1.7	1.7	∞
Probe Positioner Mechanical Tolerance	0.4	R	1.73	1.0	1.0	0.2	0.2	∞
Probe Positioning w/ respect to Phantom	6.7	R	1.73	1.0	1.0	3.9	3.9	∞
Extrapolation, Interpolation & Integration algorithms for Max. SAR Evaluation	4.0	R	1.73	1.0	1.0	2.3	2.3	∞
Test Sample Related								
Test Sample Positioning	2.7	N	1	1.0	1.0	2.7	2.7	35
Device Holder Uncertainty	1.67	N	1	1.0	1.0	1.7	1.7	5
Output Power Variation - SAR drift measurement	5.0	R	1.73	1.0	1.0	2.9	2.9	∞
SAR Scaling	0.0	R	1.73	1.0	1.0	0.0	0.0	∞
Phantom & Tissue Parameters								
Phantom Uncertainty (Shape & Thickness tolerances)	7.6	R	1.73	1.0	1.0	4.4	4.4	∞
Liquid Conductivity - measurement uncertainty	4.2	N	1	0.78	0.71	3.3	3.0	10
Liquid Permittivity - measurement uncertainty	4.1	N	1	0.23	0.26	1.0	1.1	10
Liquid Conductivity - Temperature Uncertainty	3.4	R	1.73	0.78	0.71	1.5	1.4	∞
Liquid Permittivity - Temperature Unceritainty	0.6	R	1.73	0.23	0.26	0.1	0.1	∞
Liquid Conductivity - deviation from target values	5.0	R	1.73	0.64	0.43	1.8	1.2	∞
Liquid Permittivity - deviation from target values	5.0	R	1.73	0.60	0.49	1.7	1.4	∞
Combined Standard Uncertainty (k=1)		RSS				11.5	11.3	60
Expanded Uncertainty (95% CONFIDENCE LEVEL)		k=2				23.0	22.6	

© 2020 PCTEST All rights reserved. Unless otherwise specified, no part of this report may be reproduced or utilized in any part, form or by any means, electronic or mechanical, including photocopying and microfilm, without permission in writing from PCTEST. If you have any questions about this international copyright or have an enquiry about obtaining additional rights to this report or assembly of contents thereof, please contact INFO@PCTEST.COM.

16 CONCLUSION

16.1 Measurement Conclusion

The SAR evaluation indicates that the EUT complies with the RF radiation exposure limits of the FCC and Innovation, Science, and Economic Development Canada, with respect to all parameters subject to this test. These measurements were taken to simulate the RF effects of RF exposure under worst-case conditions. Precise laboratory measures were taken to assure repeatability of the tests. The results and statements relate only to the item(s) tested.

Please note that the absorption and distribution of electromagnetic energy in the body are very complex phenomena that depend on the mass, shape, and size of the body, the orientation of the body with respect to the field vectors, and the electrical properties of both the body and the environment. Other variables that may play a substantial role in possible biological effects are those that characterize the environment (e.g. ambient temperature, air velocity, relative humidity, and body insulation) and those that characterize the individual (e.g. age, gender, activity level, debilitation, or disease). Because various factors may interact with one another to vary the specific biological outcome of an exposure to electromagnetic fields, any protection guide should consider maximal amplification of biological effects as a result of field-body interactions, environmental conditions, and physiological variables. [3]

© 2020 PCTEST All rights reserved. Unless otherwise specified, no part of this report may be reproduced or utilized in any part, form or by any means, electronic or mechanical, including photocopying and microfilm, without permission in writing from PCTEST. If you have any questions about this international copyright or have an enquiry about obtaining additional rights to this report or assembly of contents thereof, please contact INFO@PCTEST.COM.

17 REFERENCES

[1] Federal Communications Commission, ET Docket 93-62, Guidelines for Evaluating the Environmental Effects of Radiofrequency Radiation, Aug. 1996.

[2] ANSI/IEEE C95.1-2005, American National Standard safety levels with respect to human exposure to radio frequency electromagnetic fields, 3kHz to 300GHz, New York: IEEE, 2006.

[3] ANSI/IEEE C95.1-1992, American National Standard safety levels with respect to human exposure to radio frequency electromagnetic fields, 3kHz to 300GHz, New York: IEEE, Sept. 1992.

[4] ANSI/IEEE C95.3-2002, IEEE Recommended Practice for the Measurement of Potentially Hazardous Electromagnetic Fields - RF and Microwave, New York: IEEE, December 2002.

[5] IEEE Standards Coordinating Committee 39 –Standards Coordinating Committee 34 – IEEE Std. 1528-2013, IEEE Recommended Practice for Determining the Peak Spatial-Average Specific Absorption Rate (SAR) in the Human Head from Wireless Communications Devices: Measurement Techniques.

[6] NCRP, National Council on Radiation Protection and Measurements, Biological Effects and Exposure Criteria for RadioFrequency Electromagnetic Fields, NCRP Report No. 86, 1986. Reprinted Feb. 1995.

[7] T. Schmid, O. Egger, N. Kuster, Automated E-field scanning system for dosimetric assessments, IEEE Transaction on Microwave Theory and Techniques, vol. 44, Jan. 1996, pp. 105-113.

[8] K. Pokovic, T. Schmid, N. Kuster, Robust setup for precise calibration of E-field probes in tissue simulating liquids at mobile communications frequencies, ICECOM97, Oct. 1997, pp. 1 -124.

[9] K. Pokovic, T. Schmid, and N. Kuster, E-field Probe with improved isotropy in brain simulating liquids, Proceedings of the ELMAR, Zadar, Croatia, June 23-25, 1996, pp. 172-175.

[10] Schmid & Partner Engineering AG, Application Note: Data Storage and Evaluation, June 1998, p2.

[11] V. Hombach, K. Meier, M. Burkhardt, E. Kuhn, N. Kuster, The Dependence of EM Energy Absorption upon Human Modeling at 900 MHz, IEEE Transaction on Microwave Theory and Techniques, vol. 44 no. 10, Oct. 1996, pp. 1865-1873.

[12] N. Kuster and Q. Balzano, Energy absorption mechanism by biological bodies in the near field of dipole antennas above 300MHz, IEEE Transaction on Vehicular Technology, vol. 41, no. 1, Feb. 1992, pp. 17-23.

[13] G. Hartsgrove, A. Kraszewski, A. Surowiec, Simulated Biological Materials for Electromagnetic Radiation Absorption Studies, University of Ottawa, Bioelectromagnetics, Canada: 1987, pp. 29-36.

[14] Q. Balzano, O. Garay, T. Manning Jr., Electromagnetic Energy Exposure of Simulated Users of Portable Cellular Telephones, IEEE Transactions on Vehicular Technology, vol. 44, no.3, Aug. 1995.

[15] W. Gander, Computermathematick, Birkhaeuser, Basel, 1992.

[16] W.H. Press, S.A. Teukolsky, W.T. Vetterling, and B.P. Flannery, Numerical Recipes in C, The Art of Scientific Computing, Second edition, Cambridge University Press, 1992.

[17] N. Kuster, R. Kastle, T. Schmid, Dosimetric evaluation of mobile communications equipment with known precision, IEEE Transaction on Communications, vol. E80-B, no. 5, May 1997, pp. 645-652.

© 2020 PCTEST All rights reserved. Unless otherwise specified, no part of this report may be reproduced or utilized in any part, form or by any means, electronic or mechanical, including photocopying and microfilm, without permission in writing from PCTEST. If you have any questions about this international copyright or have an enquiry about obtaining additional rights to this report or assembly of contents thereof, please contact INFO@PCTEST.COM.

[18] CENELEC CLC/SC111B, European Prestandard (prENV 50166-2), Human Exposure to Electromagnetic Fields High-frequency: 10kHz-300GHz, Jan. 1995.

[19] Prof. Dr. Niels Kuster, ETH, Eidgenössische Technische Hoschschule Zürich, Dosimetric Evaluation of the Cellular Phone.

[20] IEC 62209-1, Measurement procedure for the assessment of specific absorption rate of human exposure to radio frequency fields from hand-held and body-mounted wireless communication devices - Part 1: Devices used next to the ear (Frequency range of 300 MHz to 6 GHz), July 2016.

[21] Innovation, Science, Economic Development Canada RSS-102 Radio Frequency Exposure Compliance of Radiocommunication Apparatus (All Frequency Bands) Issue 5, March 2015.

[22] Health Canada Safety Code 6 Limits of Human Exposure to Radio Frequency Electromagnetic Fields in the Frequency Range from 3 kHz – 300 GHz, 2015

[23] FCC SAR Test Procedures for 2G-3G Devices, Mobile Hotspot and UMPC Devices KDB Publications 941225, D01-D07

[24] SAR Measurement Guidance for IEEE 802.11 Transmitters, KDB Publication 248227 D01

[25] FCC SAR Considerations for Handsets with Multiple Transmitters and Antennas, KDB Publications 648474 D03-D04

[26] FCC SAR Evaluation Considerations for Laptop, Notebook, Netbook and Tablet Computers, FCC KDB Publication 616217 D04

[27] FCC SAR Measurement and Reporting Requirements for 100MHz – 6 GHz, KDB Publications 865664 D01-D02

[28] FCC General RF Exposure Guidance and SAR Procedures for Dongles, KDB Publication 447498, D01-D02

[29] Anexo à Resolução No. 533, de 10 de Septembro de 2009.

[30] IEC 62209-2, Human exposure to radio frequency fields from hand-held and body-mounted wireless communication devices - Human models, instrumentation, and procedures - Part 2: Procedure to determine the specific absorption rate (SAR) for wireless communication devices used in close proximity to the human body (frequency range of 30 MHz to 6 GHz), Mar. 2010.

© 2020 PCTEST All rights reserved. Unless otherwise specified, no part of this report may be reproduced or utilized in any part, form or by any means, electronic or mechanical, including photocopying and microfilm, without permission in writing from PCTEST. If you have any questions about this international copyright or have an enquiry about obtaining additional rights to this report or assembly of contents thereof, please contact INFO@PCTEST.COM.