PCTEST ENGINEERING LABORATORY, INC.
7185 Oakland Mills Road, Columbia, MD 21046 USA
Tel. +1.410.290.6652 / Fax +1.410.290.6654
http://www.pctest.com

NEAR-FIELD POWER DENSITY EVALUATION REPORT

Applicant Name:
LG Electronics U.S.A., Inc.
1000 Sylvan Avenue
Englewood Cliffs, NJ 07632
United States

Date of Testing:
02/01/19 - 03/11/19
Test Site/Location:
PCTEST Lab, Columbia, MD, USA
Document Serial No.:
1M1901150005-15-R1.ZNF

FCC ID: **ZNFV450VM**

APPLICANT: **LG ELECTRONICS U.S.A., INC.**

DUT Type: Portable Handset
Application Type: Certification
FCC Rule Part(s): CFR §2.1093
Model: LM-V450VM
Additional Model(s): LMV450VM, V450VM
Test Device Serial No.: Pre-production: 01002

Band & Mode	Tx Frequency (MHz)	Power Density (S)
		W/m^2
n261	27500 - 28350	4.52
n260	37000 - 40000	4.98
Total Exposure Ratio		0.97
VERDICT		**PASS**

Note: This revised Test Report (S/N: 1M1901150005-15-R1.ZNF) supersedes and replaces the previously issued test report on the same subject device for the same type of testing as indicated. Please discard or destroy the previously issued test report(s) and dispose of it accordingly.

I attest to the accuracy of data. All measurements reported herein were performed by me or were made under my supervision and are correct to the best of my knowledge and belief. I assume full responsibility for the completeness of these measurements and vouch for the qualifications of all persons taking them. Test results reported herein relate only to the item(s) tested.

Randy Ortanez
President

ACCREDITED
TESTING CERT#2041.01

© 2019 PCTEST Engineering Laboratory, Inc.
REV 21.3 M
02/15/2019

© 2019 PCTEST Engineering Laboratory, Inc. All rights reserved. Unless otherwise specified, no part of this report may be reproduced or utilized in any part, form or by any means, electronic or mechanical, including photocopying and microfilm, without permission in writing from PCTEST Engineering Laboratory, Inc. If you have any questions about this international copyright or have an enquiry about obtaining additional rights to this report or assembly of contents thereof, please contact INFO@PCTEST.COM.

TABLE OF CONTENTS

1 DEVICE UNDER TEST 3

2 MEASUREMENT SYSTEM 5

3 RF EXPOSURE LIMITS FOR POWER DENSITY 7

4 SYSTEM VERIFICATION 8

5 POWER DENSITY DATA SUMMARY 9

6 EQUIPMENT LIST 14

7 MEASUREMENT UNCERTAINTIES 15

8 CONCLUSION 16

9 REFERENCES 17

APPENDIX A: TOTAL EXPOSURE RATIO

APPENDIX B: TEST PLOTS

APPENDIX C: VERIFICATION PLOTS

APPENDIX D: DUT ANTENNA DIAGRAM & TEST SETUP PHOTOGRAPHS

APPENDIX E: PROBE AND VERIFICATION SOURCE CERTIFICATES

© 2019 PCTEST Engineering Laboratory, Inc.

REV 21.3 M
02/15/2019

© 2019 PCTEST Engineering Laboratory, Inc. All rights reserved. Unless otherwise specified, no part of this report may be reproduced or utilized in any part, form or by any means, electronic or mechanical, including photocopying and microfilm, without permission in writing from PCTEST Engineering Laboratory, Inc. If you have any questions about this international copyright or have an enquiry about obtaining additional rights to this report or assembly of contents thereof, please contact INFO@PCTEST.COM.

1 DEVICE UNDER TEST

1.1 Device Overview

NR Operations Information						
Form Factor	Portable Handset					
Frequency Range of each NR transmission band	NR Band n261					
	NR Band n260					
Channel Bandwidths	NR Band n261: 50MHz, 100MHz					
	NR Band n260: 50MHz, 100MHz					
Channel Numbers and Frequencies	Low		Mid		High	
	Channel	Frequency (GHz)	Channel	Frequency (GHz)	Channel	Frequency (GHz)
NR Band n261: 50MHz BW	2071413	27.53484	2077867	27.92208	2084491	28.31952
NR Band n261: 100MHz BW	2071821	27.55932	2077891	27.92352	2084035	28.29216
NR Band n260: 50MHz BW	2229621	37.02732	2254123	38.49744	2278603	39.96624
NR Band n260: 100MHz BW	2230029	37.05180	2254147	38.49888	2278331	39.94992
Subcarrier Spacing (kHz)	120					
Total Number of Supported Uplink CCs (SISO)	4					
Total Number of Supported Uplink CCs (MIMO)	4					
Modulations Supported in UL	CP-OFDM-QPSK, CP-OFDM-16QAM, CP-OFDM-64QAM					
LTE Anchor Bands	LTE Band 13/5/4/66/2					

1.2 Input Power Specifications

All power density measurements were performed at these corresponding input power levels. Input power is per antenna element and polarization.

Table 1-1
Input Powers

Mode/Band	Antenna	Input Power (dBm) SISO	Input Power (dBm) MIMO
5G NR n261	QTM-0	0.2	0.2
	QTM-1	0.2	0.2
5G NR n260	QTM-0	-0.2	-0.2
	QTM-1	-0.2	-0.2

© 2019 PCTEST Engineering Laboratory, Inc.

REV 21.3 M
02/15/2019

© 2019 PCTEST Engineering Laboratory, Inc. All rights reserved. Unless otherwise specified, no part of this report may be reproduced or utilized in any part, form or by any means, electronic or mechanical, including photocopying and microfilm, without permission in writing from PCTEST Engineering Laboratory, Inc. If you have any questions about this international copyright or have an enquiry about obtaining additional rights to this report or assembly of contents thereof, please contact INFO@PCTEST.COM.

1.3 DUT Antenna Locations

The device has 2 antenna arrays (QTM-0 and QTM-1) Particular DUT edges were not required to be evaluated for power density if the edges were greater than 2.5 cm from the transmitting antenna according to FCC KDB Publication 941225 D06v02r01 Section III and FCC KDB Publication 648474 D04v01r03. The distances between the transmit antennas and the edges of the device are included in the filing.

Table 1-2
Device Edges/Sides for PD Testing

Antenna	Back	Front	Top	Bottom	Right	Left
QTM-0	YES	YES	YES	NO	NO	YES
QTM-1	YES	YES	YES	NO	YES	NO

1.4 Simultaneous Transmission Capabilities

According to FCC KDB Publication 447498 D01v06, transmitters are considered to be operating simultaneously when there is overlapping transmission, with the exception of transmissions during network hand-offs with maximum hand-off duration less than 30 seconds.

This device contains multiple transmitters that may operate simultaneously, and therefore requires a simultaneous transmission analysis according to FCC KDB Publication 447498 D01v06 4.3.2 procedures.

Table 1-3
Simultaneous Transmission Scenarios with NR

No.	Capable Transmit Configuration	Head	Body-Worn Accessory	Wireless Router	Phablet	Notes
1	LTE + 2.4 GHz WI-FI + 5G NR	Yes	Yes	Yes	Yes	
2	LTE + 5 GHz WI-FI + 5G NR	Yes	Yes	Yes	Yes	
3	LTE + 2.4 GHz Bluetooth + 5G NR	Yes^	Yes	Yes^	Yes	^ Bluetooth Tethering is considered
4	LTE + 2.4 GHz WI-FI MIMO + 5G NR	Yes	Yes	Yes	Yes	
5	LTE + 5 GHz WI-FI MIMO + 5G NR	Yes	Yes	Yes	Yes	
6	LTE + 2.4 GHz Bluetooth + 5 GHz WI-FI + 5G NR	Yes^	Yes	Yes^	Yes	^ Bluetooth Tethering is considered
7	LTE + 2.4 GHz Bluetooth + 5 GHz WI-FI MIMO + 5G NR	Yes^	Yes	Yes^	Yes	^ Bluetooth Tethering is considered
8	LTE + 2.4 GHz WI-FI Ant 1 + 5 GHz WI-FI Ant 2 + 5G NR	Yes	Yes	Yes	Yes	
9	LTE + 5G NR	Yes	Yes	N/A	Yes	

1. NR antenna arrays cannot transmit simultaneously.
2. Simultaneous 5G NR + LTE operations are possible only with LTE B13/5/4/66/2.
3. 2.4 GHz WLAN and 2.4 GHz Bluetooth share the same antenna path and cannot transmit simultaneously themselves.
4. All non-5G NR licensed modes share the same antenna path and cannot transmit simultaneously.
5. 5G NR operations are limited to non-standalone (EN-DC) operations only.

1.5 Guidance Applied

- November 2017 & October 2018 TCBC Workshop Notes
- SPEAG DASY6 System Handbook (February 2019)
- IEC Draft TR 63170: 2018
- FCC KDB 865664 D02 v01r04
- FCC KDB 447498 D01 v02r01

© 2019 PCTEST Engineering Laboratory, Inc. All rights reserved. Unless otherwise specified, no part of this report may be reproduced or utilized in any part, form or by any means, electronic or mechanical, including photocopying and microfilm, without permission in writing from PCTEST Engineering Laboratory, Inc. If you have any questions about this international copyright or have an enquiry about obtaining additional rights to this report or assembly of contents thereof, please contact INFO@PCTEST.COM.

2 MEASUREMENT SYSTEM

2.1 Measurement Setup

Power Density measurements for mmWave frequencies were performed using the DASY6 with cDASY6 5G module. The DASY6 is made by Schmid & Partner Engineering AG (SPEAG) in Zurich, Switzerland and consists of a high precision robotics system (Staubli), robot controller, desktop computer, near-field probe, probe alignment sensor, and the 5G phantom. The robot is a six-axis industrial robot, performing precise movements to position the probe to the location (points) of maximum electromagnetic field (EMF).

2.2 SPEAG EUmmWV3 Probe / E-Field 5G Probe

The EUmmWV3 probe consists of two dipoles optimally arranged to obtain pseudo-vector information.

Frequency Range	750 MHz – 110 GHz
Dynamic Range	< 20 V/m – 10,000 V/m with PRE-10 (min < 50 V/m – 3,000 V/m)
Position Precision	< 0.2 mm (cDASY6)
Dimensions	Probe Overall Length: 320 mm Probe Body Diameter: 8 mm Probe Tip Length: 23 mm Probe Tip Diameter: Encapsulation 8 mm (Internal sensor < 1mm) Distance from Probe Tip to Sensor X Calibration Point: 1.5 mm Distance from Probe Tip to Sensor Y Calibration Point: 1.5 mm
Applications	E-field measurements of 5G devices and other mm-wave transmitters operating above 10 GHz in < 2 mm distance from device (free-space) Power density, H-field and far-field analysis using total field reconstruction
Compatibility	cDASY6 + 5G-Module SW1.6.0.12

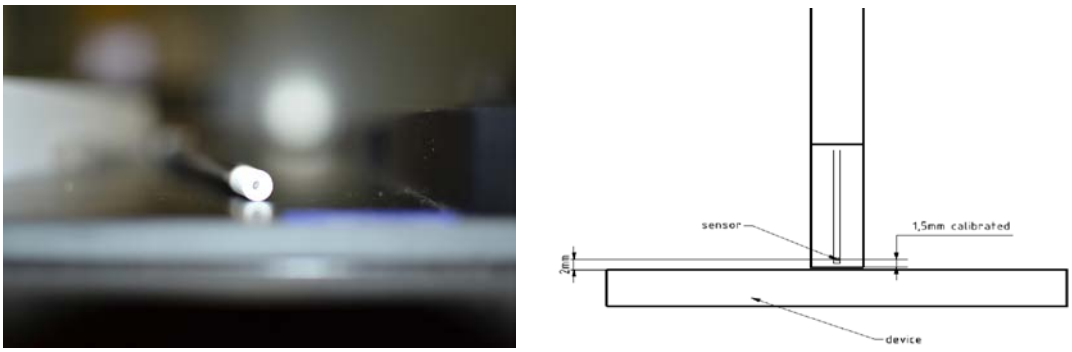

Figure 3-1
EUmmWV3 Probe

© 2019 PCTEST Engineering Laboratory, Inc.

© 2019 PCTEST Engineering Laboratory, Inc. All rights reserved. Unless otherwise specified, no part of this report may be reproduced or utilized in any part, form or by any means, electronic or mechanical, including photocopying and microfilm, without permission in writing from PCTEST Engineering Laboratory, Inc. If you have any questions about this international copyright or have an enquiry about obtaining additional rights to this report or assembly of contents thereof, please contact INFO@PCTEST.COM.

2.3 Power Density Assessment Based on E-Field Measurements

Within a short distance from the transmitting source, power density was determined based on both electric and magnetic fields. Generally, the magnitude and phase of two components of either the E-field or H-field were needed on a sufficiently large surface to fully characterize the total E-field and H-field distributions. Nevertheless, solutions based on direct measurement of E-field and H-field can be used to compute power density. The general measurement approach used for this device was:

a) The local E field on the measurement surface was measured at a reference location where the field is well above the noise level. This reference level was used at the end of this procedure to assess output power drift of the DUT during the measurement.

b) The electric field on the measurement surface was scanned. Measurements are conducted according to the instructions provided by the measurement system manufacturer. Measurement spatial resolution can depend on the measured field characteristic and measurement methodology used by the system. The planar scan step size was configured at λ/4.

c) For cDASY6, H-field was calculated from the measured E-field using a reconstruction algorithm. As the power density calculation requires knowledge of both amplitude and phase, reconstruction algorithms can also be used to obtain field information from the measured E-field data (e.g. the phase from the amplitude if only the amplitude is measured). H-field and phase data was reconstructed from repeated measurements (three per measurement point) on two measurement planes separated by λ/4.

d) The total spatial-average power density distribution on the evaluation surface is determined per the below equation. The spatial averaging area, *A*, is specified by the applicable exposure limits or regulatory requirements. A circular shape was used.

$$PDavg = \frac{1}{2A}\int_A |Re(ExH)| \cdot ds$$

e) The maximum spatial-average on the evaluation surface is the final quantity to determine compliance against applicable limits.

f) The local E field reference value, at the same location as step 2, was re-measured after the scan was complete to calculate the power drift. If the drift deviated by more than 5%, the power density test and drift measurements were repeated.

2.4 Reconstruction Algorithm

Computation of the power density in general requires measurement information from the both E-field and H-field amplitudes and phases in the plane of incidence. Reconstruction of these quantities from pseudo-vector E-field measurements is feasible according to the manufacturer, as they are determined via Maxwell's equations. As such, the SPEAG reconstruction approach was based on the Gerchberg-Saxton algorithm, which benefits from the availability of the E-field polarization ellipse information obtained with the EUmmWV3 probe.

© 2019 PCTEST Engineering Laboratory, Inc.

REV 21.3 M
02/15/2019

© 2019 PCTEST Engineering Laboratory, Inc. All rights reserved. Unless otherwise specified, no part of this report may be reproduced or utilized in any part, form or by any means, electronic or mechanical, including photocopying and microfilm, without permission in writing from PCTEST Engineering Laboratory, Inc. If you have any questions about this international copyright or have an enquiry about obtaining additional rights to this report or assembly of contents thereof, please contact INFO@PCTEST.COM.

3 RF EXPOSURE LIMITS FOR POWER DENSITY

3.1 Uncontrolled Environment

UNCONTROLLED ENVIRONMENTS are defined as locations where there is the exposure of individuals who have no knowledge or control of their exposure. The general population/uncontrolled exposure limits are applicable to situations in which the general public may be exposed or in which persons who are exposed as a consequence of their employment may not be made fully aware of the potential for exposure or cannot exercise control over their exposure. Members of the general public would come under this category when exposure is not employment-related; for example, in the case of a wireless transmitter that exposes persons in its vicinity.

3.2 Controlled Environment

CONTROLLED ENVIRONMENTS are defined as locations where there is exposure that may be incurred by persons who are aware of the potential for exposure, (i.e. as a result of employment or occupation). In general, occupational/controlled exposure limits are applicable to situations in which persons are exposed as a consequence of their employment, who have been made fully aware of the potential for exposure and can exercise control over their exposure. This exposure category is also applicable when the exposure is of a transient nature due to incidental passage through a location where the exposure levels may be higher than the general population/uncontrolled limits, but the exposed person is fully aware of the potential for exposure and can exercise control over his or her exposure by leaving the area or by some other appropriate means.

3.3 RF Exposure Limits for Frequencies Above 6 GHz

Per §1.1310, (d)(3), the MPE limits are applied for frequencies above 6 GHz. Power Density is expressed in units of W/m^2 or mW/cm^2.

Power density was spatially averaged over a circular area of 4 cm^2 per interim FCC Guidance for near-field power density evaluations per October 2018 TCB Workshop notes.

Table 3-1
Human Exposure Limits Specified in FCC 47 CFR §1.1310

Human Exposure to Radiofrequency (RF) Radiation Limits		
Frequency Range [MHz]	**Power Density [mW/cm^2]**	**Average Time [Minutes]**
(A) Limits For Occupational / Controlled Environments (f = frequency)		
1,500 – 100,000	5.0	6
(B) Limits For General Population / Uncontrolled Environments (f = frequency)		
1,500 – 100,000	1.0	30

Note: 1.0 mW/cm^2 is 10 W/m^2

© 2019 PCTEST Engineering Laboratory, Inc. All rights reserved. Unless otherwise specified, no part of this report may be reproduced or utilized in any part, form or by any means, electronic or mechanical, including photocopying and microfilm, without permission in writing from PCTEST Engineering Laboratory, Inc. If you have any questions about this international copyright or have an enquiry about obtaining additional rights to this report or assembly of contents thereof, please contact INFO@PCTEST.COM.

4 SYSTEM VERIFICATION

4.1 Test System Verification

The system was verified to be within ±0.66 dB of the power density targets on the calibration certificate according to the test system specification in the user's manual and calibration facility recommendation. The 0.66 dB deviation threshold represents the expanded uncertainty for system performance checks using SPEAG's mmWave verification sources. The same spatial resolution and measurement region used in the source calibration was applied during the system check.

The measured power density distribution of verification source was also confirmed through visual inspection to have no noticeable differences, both spatially (shape) and numerically (level) from the distribution provided by the manufacturer, per November 2017 TCBC Workshop Notes.

Table 4-1
System Check Results

System Verification											
Date	Dasy System	Frequency (GHz)	Probe Serial #	DAE Serial #	Source SN	Target (Normal PD W/m^2 - 4 cm)	Measured (Normal PD W/m^2 - 4 cm)	Deviation (dB)	Target (Total PD W/m^2 - 4 cm)	Measured (Total PD W/m^2 - 4 cm)	Deviation (dB)
2/1/2019	N	30	9389	1323	1015	35.5	35.3	-0.02	36.1	35.7	-0.05
2/4/2019	N	30	9389	1323	1015	35.5	36.1	0.07	36.1	36.6	0.06
2/5/2019	N	30	9389	1323	1035	34.8	33.6	-0.15	35.1	34	-0.14
2/8/2019	N	30	9389	1323	1035	34.8	38.2	0.40	35.1	38.7	0.42
2/11/2019	N	30	9389	1323	1035	34.8	37.8	0.36	35.1	38.5	0.40
2/13/2019	N	30	9389	1323	1035	34.8	37.9	0.37	35.1	38.4	0.39
2/17/2019	N	30	9389	1323	1035	34.8	37.8	0.36	35.1	38.3	0.38
2/18/2019	N	30	9389	1323	1035	34.8	38.1	0.39	35.1	38.6	0.41
2/19/2019	N	30	9389	1323	1035	34.8	38.8	0.47	35.1	39.3	0.49
2/20/2019	N	30	9389	1323	1035	34.8	37.9	0.37	35.1	38.4	0.39
2/21/2019	N	30	9389	1323	1035	34.8	38.1	0.39	35.1	38.8	0.44
2/22/2019	N	30	9389	1323	1035	34.8	37.9	0.37	35.1	38.4	0.39
2/25/2019	N	30	9389	1323	1035	34.8	37.4	0.31	35.1	38.1	0.36
2/26/2019	N	30	9389	1323	1035	34.8	37.4	0.31	35.1	38	0.34
2/27/2019	N	30	9389	1323	1035	34.8	36.9	0.25	35.1	37.7	0.31
2/28/2019	N	30	9389	1323	1035	34.8	37.7	0.35	35.1	38.2	0.37
3/1/2019	N	30	9389	1323	1035	34.8	37.7	0.35	35.1	38.2	0.37
3/2/2019	N	30	9389	1323	1035	34.8	36.5	0.21	35.1	37.2	0.25
3/4/2019	N	30	9389	1323	1035	34.8	36.9	0.25	35.1	37.5	0.29
3/5/2019	N	30	9389	1323	1035	34.8	37.9	0.37	35.1	38.5	0.40
3/6/2019	N	30	9389	1323	1035	34.8	36.8	0.24	35.1	37.4	0.28
3/7/2019	N	30	9389	1323	1035	34.8	36.9	0.25	35.1	37.5	0.29
3/8/2019	N	30	9389	1323	1035	34.8	38.2	0.40	35.1	38.8	0.44
3/11/2019	N	30	9389	1323	1035	34.8	37.9	0.37	35.1	38.4	0.39

Note: A **10 mm distance spacing** was used from the reference horn antenna aperture to the probe element. This includes 4.45 mm from the reference antenna horn aperture to the surface of the verification source plus 5.55 mm from the surface to the probe. The SPEAG software requires a setting of "5.55 mm" for the correct set up.

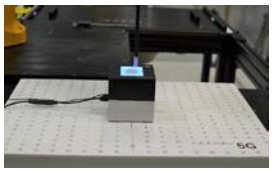

Figure 4-1
System Verification Setup Photo

© 2019 PCTEST Engineering Laboratory, Inc. All rights reserved. Unless otherwise specified, no part of this report may be reproduced or utilized in any part, form or by any means, electronic or mechanical, including photocopying and microfilm, without permission in writing from PCTEST Engineering Laboratory, Inc. If you have any questions about this international copyright or have an enquiry about obtaining additional rights to this report or assembly of contents thereof, please contact INFO@PCTEST.COM.

5 POWER DENSITY DATA SUMMARY

5.1 Power Density Results

Table 5-1
NR Band n261 QTM-0 Test Results (CP-OFDM)

MEASUREMENT RESULTS															
Test Configuration	Test Distance (mm)	Band	Channel	Frequency (GHz)	Modulation	# of CC	BW per CC (MHz)	RB	RB Offset	Drift (dB)	Beam ID (H)	Beam ID (V)	Normal S (W/m^2)	Total S (W/m^2)	Plot #
Left Edge	2	n261	low	27.55932	QPSK	1	100	1	0	-0.12	19	155	3.210	3.820	
Left Edge	2	n261	mid	27.92352	QPSK	1	100	1	0	0.01	19	155	2.220	2.640	
Left Edge	2	n261	high	28.29216	QPSK	1	100	1	0	-0.07	19	155	1.910	2.180	
Left Edge	2	n261	low	27.55932	16QAM	1	100	1	0	0.04	19	155	3.150	3.690	
Left Edge	2	n261	low	27.55932	64QAM	1	100	1	0	-0.10	19	155	3.140	3.680	
Left Edge	2	n261	low	27.55190	QPSK	4	100	1	0	0.05	19	155	3.260	3.750	
				27.65189			100	1	0		19	155			
				27.75188			100	1	0		19	155			
				27.85187			100	1	0		19	155			
Left Edge	2	n261	low	27.53484	QPSK	1	50	1	0	0.02	19	155	3.350	3.980	
Left Edge	2	n261	low	27.53484	QPSK	1	50	16	0	0.07	19	155	3.320	3.850	
Left Edge	2	n261	low	27.53484	QPSK	1	50	32	0	0.00	19	155	2.830	3.370	
Left Edge	2	n261	low	27.55932	QPSK	1	100	1	0	0.12	18	147	2.930	3.440	
Left Edge	2	n261	mid	27.92352	QPSK	1	100	1	0	0.09	18	147	2.610	3.000	
Left Edge	2	n261	high	28.29216	QPSK	1	100	1	0	0.01	18	147	1.820	2.050	
Left Edge	2	n261	low	27.55932	16QAM	1	100	1	0	0.11	18	147	3.280	3.830	
Left Edge	2	n261	low	27.55932	64QAM	1	100	1	0	0.08	18	147	3.620	4.150	
Left Edge	2	n261	low	27.55190	64QAM	4	100	1	0	-0.05	18	147	3.200	3.690	
				27.65189			100	1	0		18	147			
				27.75188			100	1	0		18	147			
				27.85187			100	1	0		18	147			
Left Edge	2	n261	low	27.53484	64QAM	1	50	1	0	-0.02	18	147	3.400	4.030	
Left Edge	2	n261	low	27.55932	64QAM	1	100	33	0	0.04	18	147	3.660	**4.190**	1
Left Edge	2	n261	low	27.55932	64QAM	1	100	66	0	-0.04	18	147	3.310	3.840	
Back Side	2	n261	low	27.53484	QPSK	1	50	1	0	-0.07	19	155	1.380	1.650	
Front Side	2	n261	low	27.53484	QPSK	1	50	1	0	0.05	19	155	1.480	1.870	
Top Edge	2	n261	low	27.55932	64QAM	1	100	33	0	-0.02	21	145	0.432	0.471	
FCC 47 CFR §1.1310 - SAFETY LIMIT Spatially Averaged Uncontrolled Exposure/General Population													**Power Density (S) 10 W/m^2 averaged over 4cm^2**		

© 2019 PCTEST Engineering Laboratory, Inc.

REV 21.3 M
02/15/2019

© 2019 PCTEST Engineering Laboratory, Inc. All rights reserved. Unless otherwise specified, no part of this report may be reproduced or utilized in any part, form or by any means, electronic or mechanical, including photocopying and microfilm, without permission in writing from PCTEST Engineering Laboratory, Inc. If you have any questions about this international copyright or have an enquiry about obtaining additional rights to this report or assembly of contents thereof, please contact INFO@PCTEST.COM.

Table 5-2
NR Band n261 QTM-1 Test Results (CP-OFDM)

MEASUREMENT RESULTS															
Test Configuration	Test Distance (mm)	Band	Channel	Frequency (GHz)	Modulation	# of CC	BW per CC (MHz)	RB	RB Offset	Drift (dB)	Beam ID (H)	Beam ID (V)	Normal S (W/m^2)	Total S (W/m^2)	Plot #
Right Edge	2	n261	low	27.55932	QPSK	1	100	1	0	-0.01	23	151	3.320	3.840	
Right Edge	2	n261	mid	27.92352	QPSK	1	100	1	0	0.00	23	151	2.520	2.930	
Right Edge	2	n261	high	28.29216	QPSK	1	100	1	0	-0.02	23	151	1.920	2.220	
Right Edge	2	n261	low	27.55932	16QAM	1	100	1	0	-0.07	23	151	3.580	4.030	
Right Edge	2	n261	low	27.55932	64QAM	1	100	1	0	-0.02	23	151	3.330	3.940	
Right Edge	2	n261	low	27.55190	16QAM	4	100	1	0	-0.13	23	151	3.300	3.690	
				27.65189			100	1	0		23	151			
				27.75188			100	1	0		23	151			
				27.85187			100	1	0		23	151			
Right Edge	2	n261	low	27.53484	16QAM	1	50	1	0	-0.07	23	151	3.210	3.730	
Right Edge	2	n261	low	27.55932	16QAM	1	100	33	0	0.04	23	151	2.960	3.480	
Right Edge	2	n261	low	27.55932	16QAM	1	100	66	0	0.06	23	151	3.200	3.520	
Right Edge	2	n261	low	27.55932	QPSK	1	100	1	0	-0.08	14	141	3.450	4.120	
Right Edge	2	n261	mid	27.92352	QPSK	1	100	1	0	0.09	14	141	2.620	3.050	
Right Edge	2	n261	high	28.29216	QPSK	1	100	1	0	-0.07	14	141	1.950	2.330	
Right Edge	2	n261	low	27.55932	16QAM	1	100	1	0	0.09	14	141	3.470	4.080	
Right Edge	2	n261	low	27.55932	64QAM	1	100	1	0	0.01	14	141	3.750	4.380	
Right Edge	2	n261	low	27.55190	64QAM	4	100	1	0	0.00	14	141	3.510	4.190	
				27.65189			100	1	0		14	141			
				27.75188			100	1	0		14	141			
				27.85187			100	1	0		14	141			
Right Edge	2	n261	low	27.53484	64QAM	1	50	1	0	0.05	14	141	3.890	**4.520**	2
Right Edge	2	n261	low	27.53484	64QAM	1	50	16	0	-0.01	14	141	3.750	4.350	
Right Edge	2	n261	low	27.53484	64QAM	1	50	32	0	0.07	14	141	3.360	3.980	
Back Side	2	n261	low	27.55932	16QAM	1	100	1	0	-0.06	23	151	1.260	1.540	
Front Side	2	n261	low	27.53484	64QAM	1	50	1	0	0.00	14	151	1.160	1.730	
Top Edge	2	n261	low	27.53484	64QAM	1	50	1	0	-0.08	16	150	0.484	0.516	
FCC 47 CFR §1.1310 - SAFETY LIMIT Spatially Averaged Uncontrolled Exposure/General Population													**Power Density (S) 10 W/m^2 averaged over 4cm^2**		

© 2019 PCTEST Engineering Laboratory, Inc.

REV 21.3 M
02/15/2019

© 2019 PCTEST Engineering Laboratory, Inc. All rights reserved. Unless otherwise specified, no part of this report may be reproduced or utilized in any part, form or by any means, electronic or mechanical, including photocopying and microfilm, without permission in writing from PCTEST Engineering Laboratory, Inc. If you have any questions about this international copyright or have an enquiry about obtaining additional rights to this report or assembly of contents thereof, please contact INFO@PCTEST.COM.

Table 5-3
NR Band n260 QTM-0 Test Results (CP-OFDM)

MEASUREMENT RESULTS															
Test Configuration	Test Distance (mm)	Band	Channel	Frequency (GHz)	Modulation	# of CC	BW per CC (MHz)	RB	RB Offset	Drift (dB)	Beam ID (H)	Beam ID (V)	Normal S (W/m^2)	Total S (W/m^2)	Plot #
Left Edge	2	n260	low	37.05180	QPSK	1	100	1	0	-0.02	20	-	1.320	1.870	
Left Edge	2	n260	mid	38.49888	QPSK	1	100	1	0	-0.04	20	-	1.430	1.830	
Left Edge	2	n260	high	39.94992	QPSK	1	100	1	0	0.16	20	-	1.310	1.710	
Left Edge	2	n260	low	37.05180	16QAM	1	100	1	0	0.03	20	-	1.580	2.010	
Left Edge	2	n260	low	37.05180	64QAM	1	100	1	0	-0.04	20	-	1.140	1.470	
Left Edge	2	n260	low	37.05590	16QAM	4	100	1	0	-0.02	20	-	0.826	1.070	
				37.15589			100	1	0		20	-			
				37.25588			100	1	0		20	-			
				37.35587			100	1	0		20	-			
Left Edge	2	n260	low	37.02732	16QAM	1	50	1	0	0.00	20	-	0.924	1.280	
Left Edge	2	n260	low	37.05180	16QAM	1	100	33	0	0.03	20	-	1.510	**2.070**	3
Left Edge	2	n260	low	37.05180	16QAM	1	100	66	0	-0.05	20	-	1.250	1.720	
Left Edge	2	n260	low	37.05180	QPSK	1	100	1	0	-0.02	18	-	1.450	1.830	
Left Edge	2	n260	mid	38.49888	QPSK	1	100	1	0	0.01	18	-	1.460	1.820	
Left Edge	2	n260	high	39.94992	QPSK	1	100	1	0	0.07	18	-	1.120	1.440	
Left Edge	2	n260	low	37.05180	16QAM	1	100	1	0	-0.16	18	-	1.070	1.390	
Left Edge	2	n260	low	37.05180	64QAM	1	100	1	0	0.13	18	-	1.030	1.350	
Left Edge	2	n260	low	37.05590	QPSK	4	100	1	0	-0.02	18	-	1.480	1.820	
				37.15589			100	1	0		18	-			
				37.25588			100	1	0		18	-			
				37.35587			100	1	0		18	-			
Left Edge	2	n260	low	37.02732	QPSK	1	50	1	0	0.00	18	-	1.550	2.070	
Left Edge	2	n260	low	37.02732	QPSK	1	50	16	0	0.10	18	-	1.190	1.500	
Left Edge	2	n260	low	37.02732	QPSK	1	50	32	0	0.01	18	-	1.390	1.700	
Left Edge	2	n260	low	37.05180	QPSK	1	100	1	0	0.02	-	145	1.630	2.050	
Left Edge	2	n260	mid	38.49888	QPSK	1	100	1	0	0.04	-	145	1.820	2.260	
Left Edge	2	n260	high	39.94992	QPSK	1	100	1	0	0.03	-	145	1.060	1.280	
Left Edge	2	n260	mid	38.49888	16QAM	1	100	1	0	-0.02	-	145	1.580	1.940	
Left Edge	2	n260	mid	38.49888	64QAM	1	100	1	0	-0.01	-	145	0.933	1.120	
Left Edge	2	n260	mid	38.3519	QPSK	4	100	1	0	-0.16	-	145	1.470	1.900	
				38.45189			100	1	0		-	145			
				38.55188			100	1	0		-	145			
				38.65187			100	1	0		-	145			
Left Edge	2	n260	mid	38.49744	QPSK	1	50	1	0	0.07	-	145	1.360	1.640	
Left Edge	2	n260	mid	38.49888	QPSK	1	100	33	0	-0.02	-	145	1.720	2.110	
Left Edge	2	n260	mid	38.49888	QPSK	1	100	66	0	0.05	-	145	1.660	2.030	
Left Edge	2	n260	low	37.05180	QPSK	1	100	1	0	-0.05	-	157	1.880	**2.350**	4
Left Edge	2	n260	mid	38.49888	QPSK	1	100	1	0	0.06	-	157	1.530	1.840	
Left Edge	2	n260	high	39.94992	QPSK	1	100	1	0	0.09	-	157	0.979	1.150	
Left Edge	2	n260	low	37.05180	16QAM	1	100	1	0	0.07	-	157	1.280	1.530	
Left Edge	2	n260	low	37.05180	64QAM	1	100	1	0	0.07	-	157	1.260	1.610	
Left Edge	2	n260	low	37.05590	QPSK	4	100	1	0	-0.01	-	157	1.840	2.280	
				37.15589			100	1	0		-	157			
				37.25588			100	1	0		-	157			
				37.35587			100	1	0		-	157			
Left Edge	2	n260	low	37.02732	QPSK	1	50	1	0	-0.05	-	157	1.610	1.970	
Left Edge	2	n260	low	37.05180	QPSK	1	100	33	0	-0.01	-	157	1.550	1.950	
Left Edge	2	n260	low	37.05180	QPSK	1	100	66	0	-0.06	-	157	1.550	1.900	
Back Side	2	n260	low	37.05180	16QAM	1	100	33	0	0.19	20	-	0.554	0.570	
Back Side	2	n260	low	37.05180	QPSK	1	100	1	0	0.05	-	156	0.224	0.295	
Front Side	2	n260	low	37.05180	16QAM	1	100	33	0	0.00	20	-	0.647	0.707	
Front Side	2	n260	low	37.05180	QPSK	1	100	1	0	0.11	-	148	0.430	0.588	
Top Edge	2	n260	low	37.05180	16QAM	1	100	33	0	0.13	20	-	0.513	0.540	
Top Edge	2	n260	mid	38.49888	QPSK	1	100	1	0	0.03	-	145	0.177	0.186	
FCC 47 CFR §1.1310 - SAFETY LIMIT Spatially Averaged Uncontrolled Exposure/General Population													Power Density (S) 10 W/m^2 averaged over 4cm^2		

© 2019 PCTEST Engineering Laboratory, Inc.

REV 21.3 M
02/15/2019

© 2019 PCTEST Engineering Laboratory, Inc. All rights reserved. Unless otherwise specified, no part of this report may be reproduced or utilized in any part, form or by any means, electronic or mechanical, including photocopying and microfilm, without permission in writing from PCTEST Engineering Laboratory, Inc. If you have any questions about this international copyright or have an enquiry about obtaining additional rights to this report or assembly of contents thereof, please contact INFO@PCTEST.COM.

Table 5-4
NR Band n260 QTM-1 Test Results (CP-OFDM)

MEASUREMENT RESULTS															
Test Configuration	Test Distance (mm)	Band	Channel	Frequency (GHz)	Modulation	# of CC	BW per CC (MHz)	RB	RB Offset	Drift (dB)	Beam ID (H)	Beam ID (V)	Normal S (W/m^2)	Total S (W/m^2)	Plot #
Right Edge	2	n260	low	37.05180	QPSK	1	100	1	0	-0.04	12	-	2.150	**2.630**	5
Right Edge	2	n260	mid	38.49888	QPSK	1	100	1	0	0.13	12	-	1.100	1.440	
Right Edge	2	n260	high	39.94992	QPSK	1	100	1	0	0.00	12	-	0.976	1.210	
Right Edge	2	n260	low	37.05180	16QAM	1	100	1	0	0.04	12	-	1.390	1.840	
Right Edge	2	n260	low	37.05180	64QAM	1	100	1	0	-0.03	12	-	1.290	1.600	
Right Edge	2	n260	low	37.05590	QPSK	4	100	1	0	0.06	12	-	1.770	2.260	
				37.15589			100	1	0		12	-			
				37.25588			100	1	0		12	-			
				37.35587			100	1	0		12	-			
Right Edge	2	n260	low	37.02732	QPSK	1	50	1	0	0.10	12	-	1.790	2.260	
Right Edge	2	n260	low	37.05180	QPSK	1	100	33	0	0.13	12	-	1.460	1.780	
Right Edge	2	n260	low	37.05180	QPSK	1	100	66	0	0.06	12	-	1.580	1.950	
Right Edge	2	n260	low	37.05180	QPSK	1	100	1	0	0.02	16	-	1.910	2.520	
Right Edge	2	n260	mid	38.49888	QPSK	1	100	1	0	-0.06	16	-	1.560	2.080	
Right Edge	2	n260	high	39.94992	QPSK	1	100	1	0	0.04	16	-	1.300	1.640	
Right Edge	2	n260	low	37.05180	16QAM	1	100	1	0	-0.05	16	-	1.220	1.550	
Right Edge	2	n260	low	37.05180	64QAM	1	100	1	0	0.06	16	-	1.190	1.530	
Right Edge	2	n260	low	37.05590	QPSK	4	100	1	0	0.07	16	-	1.830	2.390	
				37.15589			100	1	0		16	-			
				37.25588			100	1	0		16	-			
				37.35587			100	1	0		16	-			
Right Edge	2	n260	low	37.02732	QPSK	1	50	1	0	-0.07	16	-	1.520	1.950	
Right Edge	2	n260	low	37.05180	QPSK	1	100	33	0	0.13	16	-	1.600	2.040	
Right Edge	2	n260	low	37.05180	QPSK	1	100	66	0	0.01	16	-	1.740	2.200	
Right Edge	2	n260	low	37.05180	QPSK	1	100	1	0	-0.09	-	143	1.590	2.000	
Right Edge	2	n260	mid	38.49888	QPSK	1	100	1	0	-0.10	-	143	1.400	1.720	
Right Edge	2	n260	high	39.94992	QPSK	1	100	1	0	-0.02	-	143	0.657	0.802	
Right Edge	2	n260	low	37.05180	16QAM	1	100	1	0	-0.06	-	143	1.460	1.840	
Right Edge	2	n260	low	37.05180	64QAM	1	100	1	0	0.06	-	143	1.610	1.980	
Right Edge	2	n260	low	37.05590	QPSK	4	100	1	0	0.11	-	143	1.320	1.650	
				37.15589			100	1	0		-	143			
				37.25588			100	1	0		-	143			
				37.35587			100	1	0		-	143			
Right Edge	2	n260	low	37.02732	QPSK	1	50	1	0	-0.13	-	143	1.830	2.270	
Right Edge	2	n260	low	37.02732	QPSK	1	50	16	0	0.05	-	143	1.420	1.800	
Right Edge	2	n260	low	37.02732	QPSK	1	50	32	0	0.10	-	143	1.310	1.660	
Right Edge	2	n260	low	37.05180	QPSK	1	100	1	0	-0.09	-	140	1.680	2.190	
Right Edge	2	n260	mid	38.49888	QPSK	1	100	1	0	-0.05	-	140	1.690	2.010	
Right Edge	2	n260	high	39.94992	QPSK	1	100	1	0	0.04	-	140	1.330	1.510	
Right Edge	2	n260	low	37.05180	16QAM	1	100	1	0	0.02	-	140	1.630	2.050	
Right Edge	2	n260	low	37.05180	64QAM	1	100	1	0	0.05	-	140	1.690	2.160	
Right Edge	2	n260	low	37.05590	QPSK	4	100	1	0	0.06	-	140	1.470	1.840	
				37.15589			100	1	0		-	140			
				37.25588			100	1	0		-	140			
				37.35587			100	1	0		-	140			
Right Edge	2	n260	low	37.02732	QPSK	1	50	1	0	-0.06	-	140	1.780	**2.350**	6
Right Edge	2	n260	low	37.02732	QPSK	1	50	16	0	-0.05	-	140	1.730	2.180	
Right Edge	2	n260	low	37.02732	QPSK	1	50	32	0	-0.05	-	140	1.680	2.050	
Back Side	2	n260	low	37.05180	QPSK	1	100	1	0	-0.04	12	-	0.713	0.731	
Back Side	2	n260	low	37.02732	QPSK	1	50	1	0	-0.10	-	151	0.363	0.525	
Front Side	2	n260	low	37.05180	QPSK	1	100	1	0	-0.11	12	-	0.951	1.010	
Front Side	2	n260	low	37.02732	QPSK	1	50	1	0	0.01	-	152	0.474	0.640	
Top Edge	2	n260	low	37.05180	QPSK	1	100	1	0	-0.60	12	-	0.331	0.351	
Top Edge	2	n260	low	37.02732	QPSK	1	50	1	0	0.11	-	140	0.355	0.363	
FCC 47 CFR §1.1310 - SAFETY LIMIT Spatially Averaged Uncontrolled Exposure/General Population													Power Density (S) 10 W/m^2 averaged over 4cm^2		

© 2019 PCTEST Engineering Laboratory, Inc.

REV 21.3 M
02/15/2019

© 2019 PCTEST Engineering Laboratory, Inc. All rights reserved. Unless otherwise specified, no part of this report may be reproduced or utilized in any part, form or by any means, electronic or mechanical, including photocopying and microfilm, without permission in writing from PCTEST Engineering Laboratory, Inc. If you have any questions about this international copyright or have an enquiry about obtaining additional rights to this report or assembly of contents thereof, please contact INFO@PCTEST.COM.

5.2 Power Density Test Notes

General Notes:

1. The manufacturer has confirmed that the devices tested have the same physical, mechanical and thermal characteristics and are within operational tolerances expected for production units.
2. Power density was calculated by repeated E-field measurements on two measurement planes separated by λ/4. Please see Section 2.3 for more details of the evaluation process.
3. DUT was configured to transmit with a manufacturer provided test software to control specific antenna(s) and Beam ID(s) to ensure the test configurations constant for the entire evaluation.
4. Batteries are fully charged at the beginning of the Power Density measurements. The DUT was connected to a wall charger for some measurement due to test duration. It was confirmed that the charger plugged into this DUT does not impact the near-field PD test results.
5. This device contains transmitters that may operate simultaneously. Therefore, simultaneous transmission analysis is required to evaluate SAR and Power Density. Total exposure ratio (TER) is evaluated in Appendix A.
6. NR Band n261 was evaluated using MIMO polarization (both H+V components active). Due to SW and HW limitations, NR Band n260 was evaluated using SISO H polarization and SISO V polarization separately. MIMO operations for n260 were assessed in Annex A for simultaneous transmission analysis.
7. Per FCC guidance, all beams were simulated in the near field for each antenna and evaluation plane. For the worst case edge, the highest simulated beam ID was measured for low, mid, and high channel with 1CC, CP-OFDM QPSK, and 100 MHz BW. Additional evaluations with highest simulated beam ID were made at CP-OFDM 16QAM, CP-OFDM 64QAM, 4 CCs, 50MHz BW, half RB sizes, and full RB sizes. The process was repeated for second highest simulated beam ID.
8. Back side, front side, and top edge were measured with the highest Beam ID from the simulation with the RF configuration that resulted in the maximum power density.
9. This device has power reduction for some WLAN modes for simultaneous transmission compliance. Refer to SAR test report for SAR compliance data.

© 2019 PCTEST Engineering Laboratory, Inc. All rights reserved. Unless otherwise specified, no part of this report may be reproduced or utilized in any part, form or by any means, electronic or mechanical, including photocopying and microfilm, without permission in writing from PCTEST Engineering Laboratory, Inc. If you have any questions about this international copyright or have an enquiry about obtaining additional rights to this report or assembly of contents thereof, please contact INFO@PCTEST.COM.

6 EQUIPMENT LIST

Manufacturer	Model	Description	Cal Date	Cal Interval	Cal Due	Serial Number
SPEAG	SM 003 100 AA	30 GHz Verification Source	10/1/2018	Annual	10/1/2019	1015
SPEAG	SM 003 100 AA	30 GHz Verification Source	1/28/2019	Annual	1/28/2020	1035
SPEAG	DAE4	Dasy Data Acquisition Electronics	8/14/2018	Annual	8/14/2019	1323
SPEAG	EUmmWV3	E-Field Probe	11/6/2018	Annual	11/6/2019	9389
-	WL25-1	Conducted Cable Set (25GHz)	10/31/2018	Annual	10/31/2019	WL25-1
Agilent	N9038A	MXE EMI Receiver	6/11/2018	Annual	6/11/2019	MY51210133
Emco	3116	Horn Antenna (18 - 40GHz)	6/7/2018	Triennial	6/7/2021	9203-2178
Huber+Suhner	Sucoflex 102A	40GHz Radiated Cable	8/23/2018	Annual	8/23/2019	251425001
Rohde & Schwarz	SFUNIT-Rx	Shielded Filter Unit	6/25/2018	Annual	6/25/2019	102133
Rohde & Schwarz	TS-PR40	26.5-40 GHz Pre-Amplifier	9/19/2018	Annual	9/19/2019	100037
Rohde & Schwarz	FSW67	Signal / Spectrum Analyzer	8/17/2018	Annual	8/17/2019	103200
HP	8564E	Spectrum Analyzer (9 kHz - 40 GHz)	7/23/2018	Annual	7/23/2019	3846A01599
Agilent	N9030A	PXA Signal Analyzer (44GHz)	5/25/2018	Annual	5/25/2019	MY52350166
Emco	3115	Horn Antenna (1-18GHz)	3/28/2018	Biennial	3/28/2020	9704-5182
Keysight Technologies	N9030A	3Hz-44GHz PXA Signal Analyzer	3/20/2018	Annual	3/20/2019	MY49430494
Keysight Technologies	N9030A	PXA Signal Analyzer	8/6/2018	Annual	8/6/2019	MY54490576
Rohde & Schwarz	180-442-KF	Horn (Small)	8/21/2018	Annual	8/21/2019	U157403-01
Rohde & Schwarz	ESU26	EMI Test Receiver (26.5GHz)	5/21/2018	Annual	5/21/2019	100342
Rohde & Schwarz	SFUNIT-Rx	Shielded Filter Unit	6/18/2018	Annual	6/18/2019	102134
Mitutoyo	CD-6"CSX	Digital Caliper	4/18/2018	Biennial	4/18/2020	132645165
Seekonk	NC-100	Torque Wrench	5/4/2018	Biennial	5/4/2020	1270
Virginia Diodes Inc	SAX252	Spectrum Analyzer Extension Module	5/14/2018	Annual	5/14/2019	SAX252
Virginia Diodes Inc	SAX253	Spectrum Analyzer Extension Module	5/8/2018	Annual	5/8/2019	SAX253
Virginia Diodes Inc	SAX254	Spectrum Analyzer Extension Module	5/8/2018	Annual	5/8/2019	SAX254

© 2019 PCTEST Engineering Laboratory, Inc. All rights reserved. Unless otherwise specified, no part of this report may be reproduced or utilized in any part, form or by any means, electronic or mechanical, including photocopying and microfilm, without permission in writing from PCTEST Engineering Laboratory, Inc. If you have any questions about this international copyright or have an enquiry about obtaining additional rights to this report or assembly of contents thereof, please contact INFO@PCTEST.COM.

7 MEASUREMENT UNCERTAINTIES

a	b	c	d	e	f = b x e/d	g
Uncertainty Component	Unc. (± dB)	Prob. Dist.	Div.	ci	ui (± dB)	vi
Measurement System						
Probe Calibration	0.49	N	1	1.0	0.49	∞
Hemispherical Isotropy	0.5	R	1.73	1.0	0.29	∞
Linearity	0.2	R	1.73	0.0	0.00	∞
Detection Limits	0.04	R	1.73	1.0	0.02	∞
Modulation Response	0.4	R	1.73	1.0	0.23	∞
Resource Block Offset	0.1	R	1.73	1.0	0.06	∞
Readout Electronics	0.03	N	1	1.0	0.03	∞
Response Time	0	R	1.73	1.0	0.00	∞
Integration Time	0	R	1.73	1.0	0.00	∞
RF Ambient Conditions - Noise	0.04	R	1.73	1.0	0.02	∞
RF Ambient Conditions - Reflections	0.21	R	1.73	1.0	0.12	∞
Probe Positioner	0.04	R	1.73	1.0	0.02	∞
Probe Positioning	0.3	R	1.73	1.0	0.17	∞
Post-processing	0.6	R	1.73	1.0	0.35	∞
Test Sample Related						
Power Drift	0.22	R	1.73	1.0	0.13	∞
Input Power	0.0	N	1	0.0	0.00	∞
Combined Standard Uncertainty (k=1)		RSS			0.75	∞
Expanded Uncertainty (95% CONFIDENCE LEVEL)	k=2				1.5	

© 2019 PCTEST Engineering Laboratory, Inc.

REV 21.3 M
02/15/2019

© 2019 PCTEST Engineering Laboratory, Inc. All rights reserved. Unless otherwise specified, no part of this report may be reproduced or utilized in any part, form or by any means, electronic or mechanical, including photocopying and microfilm, without permission in writing from PCTEST Engineering Laboratory, Inc. If you have any questions about this international copyright or have an enquiry about obtaining additional rights to this report or assembly of contents thereof, please contact INFO@PCTEST.COM.

8 CONCLUSION

8.1 Measurement Conclusion

The power density measurements and total exposure ratio analysis indicate that the DUT complies with the RF radiation exposure limits of the FCC, with respect to all parameters subject to this test. These measurements were taken to simulate the RF effects of RF exposure under worst-case conditions. Precise laboratory measures were taken to assure repeatability of the tests. The results and statements relate only to the item(s) tested.

Please note that the RF Exposure and distribution of electromagnetic energy in the body are very complex phenomena that depend on the mass, shape, and size of the body, the orientation of the body with respect to the field vectors, and the electrical properties of both the body and the environment. Other variables that may play a substantial role in possible biological effects are those that characterize the environment (e.g. ambient temperature, air velocity, relative humidity, and body insulation) and those that characterize the individual (e.g. age, gender, activity level, debilitation, or disease). Because various factors may interact with one another to vary the specific biological outcome of an exposure to electromagnetic fields, any protection guide should consider maximal amplification of biological effects as a result of field-body interactions, environmental conditions, and physiological variables.

© 2019 PCTEST Engineering Laboratory, Inc. All rights reserved. Unless otherwise specified, no part of this report may be reproduced or utilized in any part, form or by any means, electronic or mechanical, including photocopying and microfilm, without permission in writing from PCTEST Engineering Laboratory, Inc. If you have any questions about this international copyright or have an enquiry about obtaining additional rights to this report or assembly of contents thereof, please contact INFO@PCTEST.COM.

9 REFERENCES

1. ANSI/IEEE C95.1-1992, American National Standard safety levels with respect to human exposure to radio frequency electromagnetic fields, 3kHz to 300GHz, New York: IEEE, Sept. 1992.

2. IEC TR 63170:2018, Measurement Procedure for the Evaluation of Power Density Related to Human Exposure to Radiofrequency Fields from Wireless Communication Devices Operating between 6 GHz and 100 GHz

3. IEC TR 62630 : 2010, Guidance for Evaluating Exposure from Multiple Electromagnetic Sources

4. K. Pokovic, T. Schmid, J. Frohlich, and N. Kuster. Novel Probes and Evaluation Procedures to Assess Field Magnitude and Polarization. IEEE Transactions on Electromagnetic Compatibility 42(2): 240 -244, 2000

5. R. W. Gerchberg and W. O. Saxton. A Practical Algorithm for the Determination of Phase from Image and Diffraction Plane Pictures. Optik 35(2): 237 – 246, 1972

6. A. P. Anderson and S. Sali. New Possibilities for Phaseless Microwave Diagnostics. Part 1: Error Reduction Techniques. IEE Proceedings H – Microwaves, Antennas and Propagation 132(5): 290 – 298, 1985

7. FCC KDB 865664 D02 v01r04: SAR Measurement Requirements for 100 MHz to 6 GHz. Federal Communications Commission – Office of Engineering and Technology, Laboratory Division.

8. FCC KDB 447498 D01 v02r01: RF Exposure Procedures and Equipment Authorization Policies for Mobile and Portable Devices. Federal Communications Commission – Office of Engineering and Technology, Laboratory Division.

9. November 2017 Telecommunications Certification Body Council (TCBC) Workshop Notes

10. SPEAG Application Note – 5G Compliance Testing with DASY6

11. October 2018 Telecommunications Certification Body Council (TCBC) Workshop notes

© 2019 PCTEST Engineering Laboratory, Inc. All rights reserved. Unless otherwise specified, no part of this report may be reproduced or utilized in any part, form or by any means, electronic or mechanical, including photocopying and microfilm, without permission in writing from PCTEST Engineering Laboratory, Inc. If you have any questions about this international copyright or have an enquiry about obtaining additional rights to this report or assembly of contents thereof, please contact INFO@PCTEST.COM.

APPENDIX B: TEST PLOTS

© 2019 PCTEST Engineering Laboratory, Inc.

PCTEST ENGINEERING LABORATORY, INC.

2-5-2019

QTM-0, Beam 18/147 (MIMO), Low.ch, 1CC, 100 MHz BW, 64QAM, 33 RB, 0 Offset

Device under Test Properties

DUT	Serial Number	DUT Type
ZNFV450VM	01002	Phone

Exposure Conditions

Phantom Section	Position, Test Distance [mm]	Band	Frequency [MHz]
5G	Left Edge, 2.00	n261	27559.3

Hardware Setup

Probe, Calibration Date	DAE, Calibration Date
EUmmWV3 – SN9389, 2018-11-06	DAE4 Sn1323, 2018-08-14

Scan Setup

	5G Scan
Grid Extents [mm]	60x60
Grid Steps [lambda]	0.25x0.25
Sensor Surface [mm]	2.0

Measurement Results

	5G Scan
Avg. Area [cm^2]	4.00
pS_{tot} avg [W/m^2]	4.19
pS_n avg [W/m^2]	3.66
E_{peak} [V/m]	75.1
Power Drift [dB]	0.04

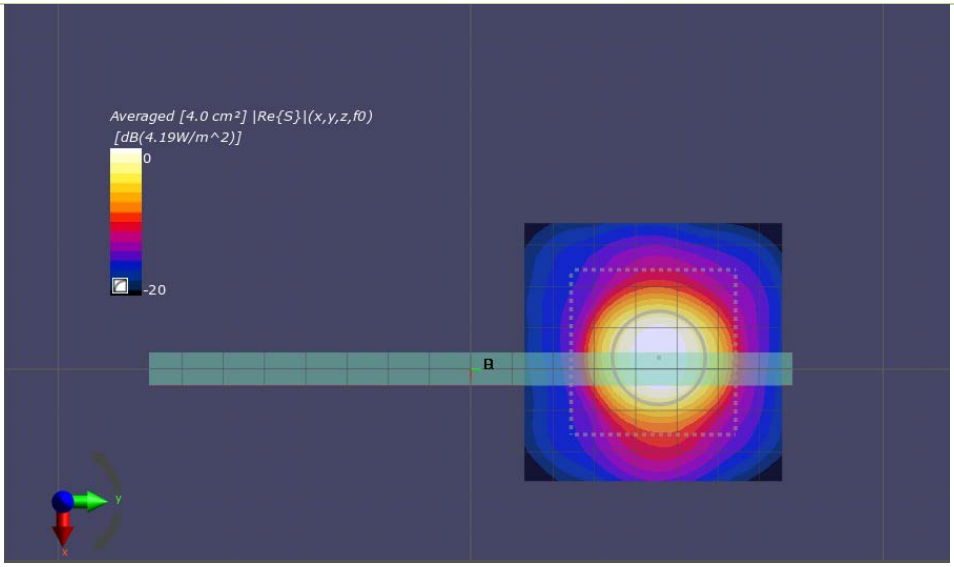

PCTEST ENGINEERING LABORATORY, INC.

2-18-2019

QTM-1, Beam 14/141 (MIMO), Low.ch, 1CC, 50 MHz BW, 64QAM, 1 RB, 0 Offset

DUT	Serial Number	DUT Type
ZNFV450VM	01002	Phone

Exposure Conditions

Phantom Section	Position, Test Distance [mm]	Band	Frequency [MHz]
5G	Right Edge, 2.0	n261	27534.8

Hardware Setup

Probe, Calibration Date	DAE, Calibration Date
EUmmWV3 – SN9389, 2018-11-06	DAE4 Sn1323, 2018-08-14

Scan Setup

	5G Scan
Grid Extents [mm]	60x60
Grid Steps [lambda]	0.25x0.25
Sensor Surface [mm]	2.0

Measurement Results

	5G Scan
Avg. Area [cm^2]	4.00
pS_{tot} avg [W/m^2]	4.52
pS_n avg [W/m^2]	3.89
E_{peak} [V/m]	78.0
Power Drift [dB]	0.05

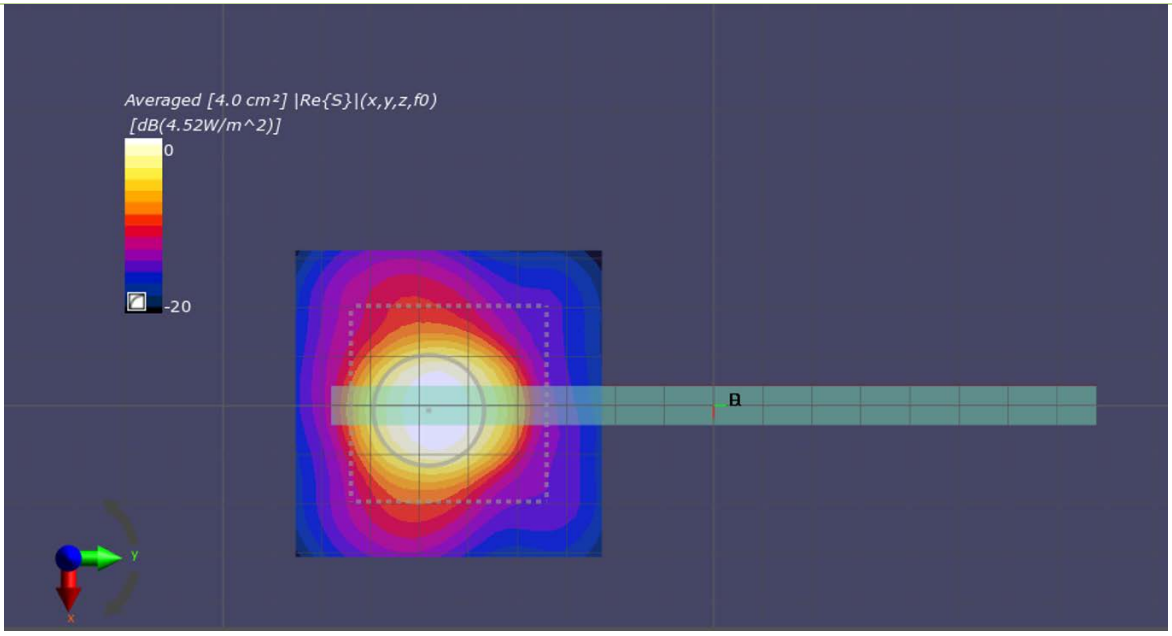

PCTEST ENGINEERING LABORATORY, INC.

2-18-2019

QTM-0, Beam 20 (SISO), Low.ch, 1CC, 100 MHz BW, 16QAM, 33 RB, 0 Offset

DUT	Serial Number	DUT Type
ZNFV450VM	01002	Phone

Exposure Conditions

Phantom Section	Position, Test Distance [mm]	Band	Frequency [MHz]
5G	Left Edge, 2.0	n260	37051.8

Hardware Setup

Probe, Calibration Date	DAE, Calibration Date
EUmmWV3 – SN9389, 2018-11-06	DAE4 Sn1323, 2018-08-14

Scan Setup

	5G Scan
Grid Extents [mm]	60x60
Grid Steps [lambda]	0.25x0.25
Sensor Surface [mm]	2.0

Measurement Results

	5G Scan
Avg. Area [cm^2]	4.00
pS_{tot} avg [W/m^2]	2.07
pS_n avg [W/m^2]	1.51
E_{peak} [V/m]	57.7
Power Drift [dB]	0.03

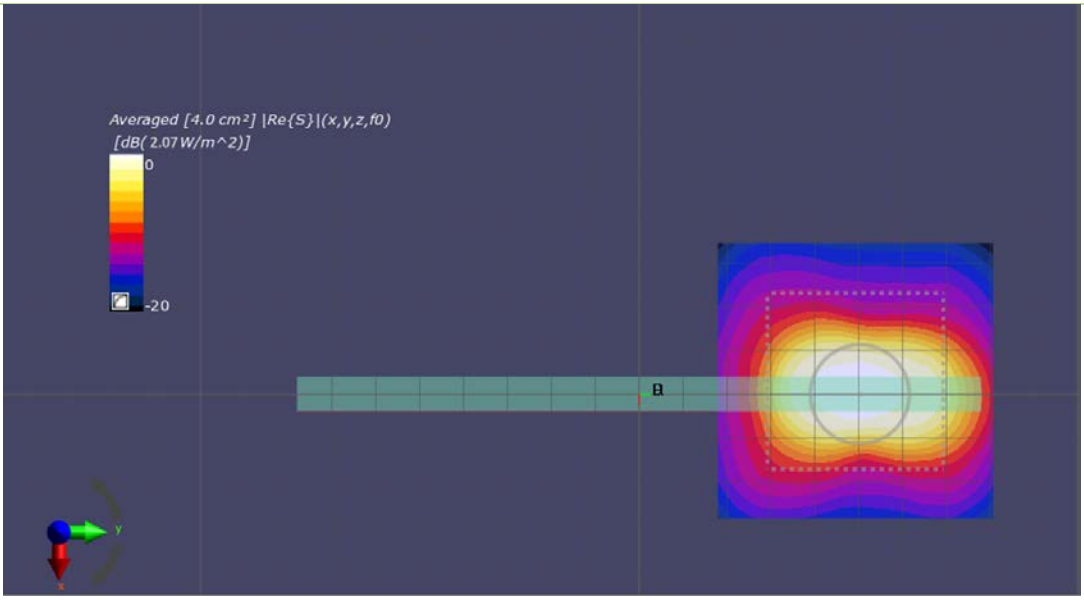

PCTEST ENGINEERING LABORATORY, INC.

2-25-2019

QTM-0, Beam 157 (SISO), Low.ch, 1CC, 100 MHz BW, QPSK, 1 RB, 0 Offset

DUT	Serial Number	DUT Type
ZNFV450VM	01002	Phone

Exposure Conditions

Phantom Section	Position, Test Distance [mm]	Band	Frequency [MHz]
5G	Left Edge, 2.0	n260	37051.8

Hardware Setup

Probe, Calibration Date	DAE, Calibration Date
EUmmWV3 – SN9389, 2018-11-06	DAE4 Sn1323, 2018-08-14

Scan Setup

	5G Scan
Grid Extents [mm]	60x60
Grid Steps [lambda]	0.25x0.25
Sensor Surface [mm]	2.0

Measurement Results

	5G Scan
Avg. Area [cm^2]	4.00
pS_{tot} avg [W/m^2]	2.35
pS_n avg [W/m^2]	1.88
E_{peak} [V/m]	77.3
Power Drift [dB]	-0.05

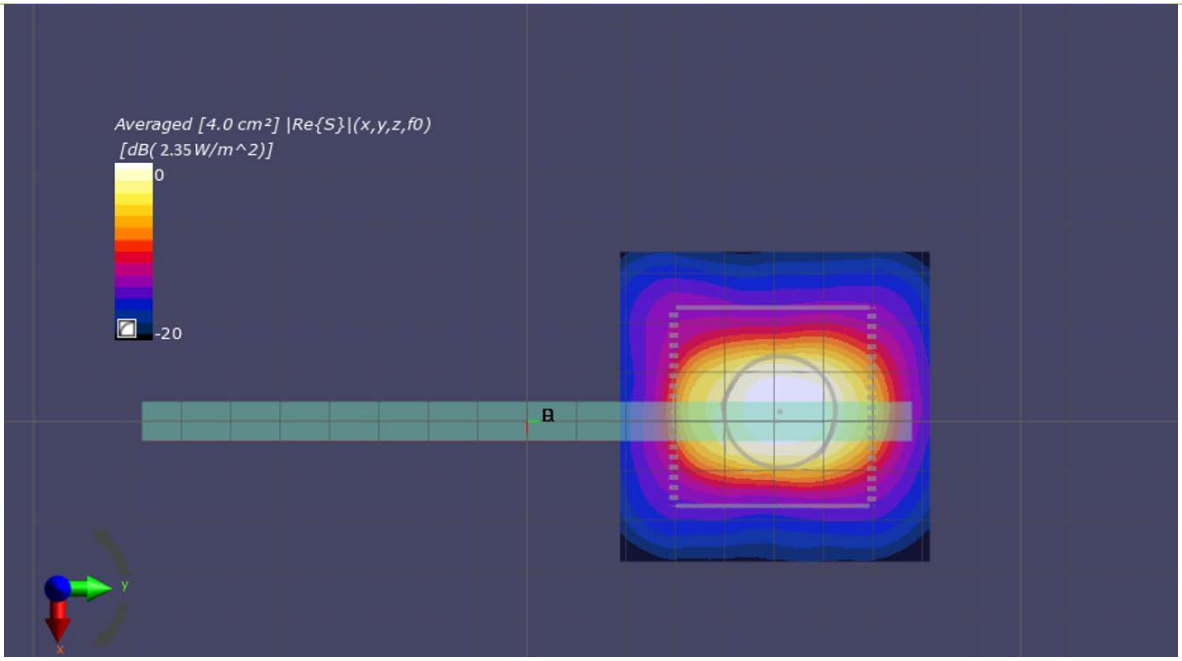

PCTEST ENGINEERING LABORATORY, INC.

2-28-2019

QTM-1, Beam 12 (SISO), Low.ch, 1CC, 100 MHz BW, QPSK, 1 RB, 0 Offset

DUT	Serial Number	DUT Type
ZNFV450VM	01002	Phone

Exposure Conditions

Phantom Section	Position, Test Distance [mm]	Band	Frequency [MHz]
5G	Right Edge, 2.0	n260	37051.8

Hardware Setup

Probe, Calibration Date	DAE, Calibration Date
EUmmWV3 – SN9389, 2018-11-06	DAE4 Sn1323, 2018-08-14

Scan Setup

	5G Scan
Grid Extents [mm]	60x60
Grid Steps [lambda]	0.25x0.25
Sensor Surface [mm]	2.0

Measurement Results

	5G Scan
Avg. Area [cm^2]	4.00
pS_{tot} avg [W/m^2]	2.63
pS_n avg [W/m^2]	2.15
E_{peak} [V/m]	68.8
Power Drift [dB]	-0.04

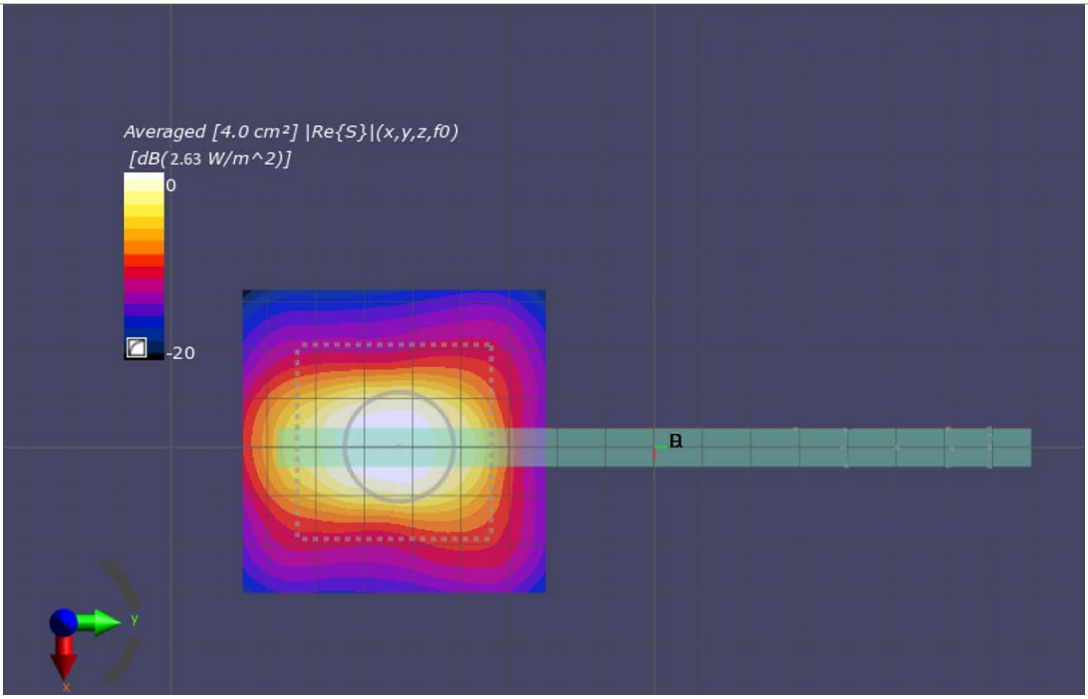

PCTEST ENGINEERING LABORATORY, INC.

3-2-2019

QTM-1, Beam 140 (SISO), Low.ch, 1CC, 50 MHz BW, QPSK, 1 RB, 0 Offset

DUT	Serial Number	DUT Type
ZNFV450VM	01002	Phone

Exposure Conditions

Phantom Section	Position, Test Distance [mm]	Band	Frequency [MHz]
5G	Right Edge, 2.00	n260	37027.3

Hardware Setup

Probe, Calibration Date	DAE, Calibration Date
EUmmWV3 – SN9389, 2018-11-06	DAE4 Sn1323, 2018-08-14

Scan Setup

	5G Scan
Grid Extents [mm]	60x60
Grid Steps [lambda]	0.25x0.25
Sensor Surface [mm]	2.0

Measurement Results

	5G Scan
Avg. Area [cm^2]	4.00
pS_{tot} avg [W/m^2]	2.35
pS_n avg [W/m^2]	1.78
E_{peak} [V/m]	68.5
Power Drift [dB]	-0.06

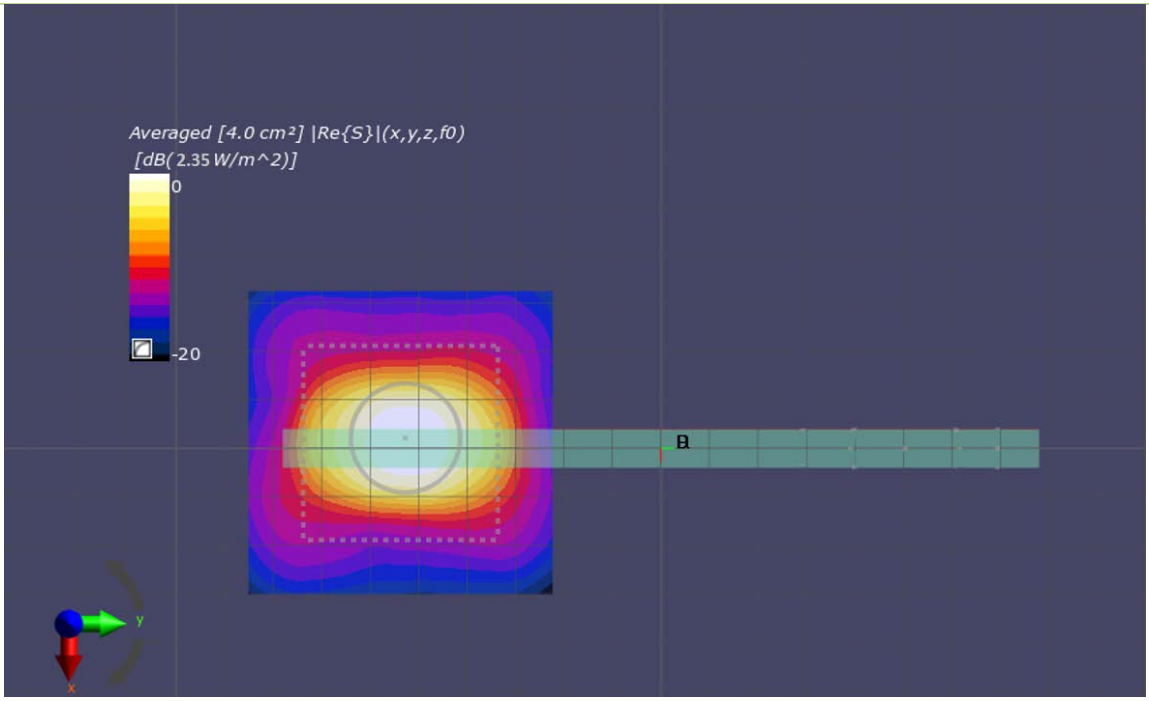

APPENDIX C: VERIFICATION PLOTS

© 2019 PCTEST Engineering Laboratory, Inc.

PCTEST ENGINEERING LABORATORY, INC.

2-4-2019
30 GHz Verification

Device under Test Properties

DUT	Serial Number	DUT Type
Verification Source	1015	30 GHz

Exposure Conditions

Phantom Section	Position, Test Distance [mm]	Band	Frequency [MHz]
5G	FRONT, 5.55	Validation band	30000.0

Hardware Setup

Probe, Calibration Date	DAE, Calibration Date
EUmmWV3 - SN9389, 2018-11-06	DAE4 Sn1323, 2018-08-14

Scan Setup

	5G Scan
Grid Extents [mm]	60.0 x 60.0
Grid Steps [lambda]	0.25 x 0.25
Sensor Surface [mm]	5.55

Measurement Results

	5G Scan
Avg. Area [cm^2]	4.00
pS_{tot} avg [W/m^2]	36.6
pS_n avg [W/m^2]	36.1
E_{peak} [V/m]	139
Total S Deviation [dB]	0.06

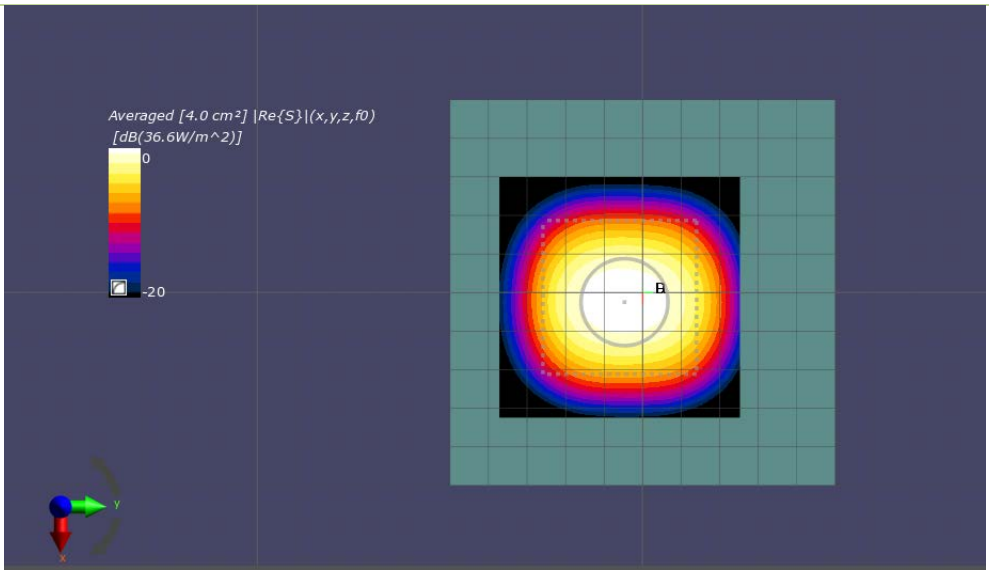

PCTEST ENGINEERING LABORATORY, INC.

2-19-2019
30 GHz Verification

Device under Test Properties

DUT	Serial Number	DUT Type
Verification Source	1035	30 GHz

Exposure Conditions

Phantom Section	Position, Test Distance [mm]	Band	Frequency [MHz]
5G	FRONT, 5.55	Validation band	30000.0

Hardware Setup

Probe, Calibration Date	DAE, Calibration Date
EUmmWV3 - SN9389, 2018-11-06	DAE4 Sn1323, 2018-08-14

Scan Setup

	5G Scan
Grid Extents [mm]	60.0 x 60.0
Grid Steps [lambda]	0.25 x 0.25
Sensor Surface [mm]	5.55

Measurement Results

	5G Scan
Avg. Area [cm^2]	4.00
pS_{tot} avg [W/m^2]	39.3
pS_n avg [W/m^2]	38.8
E_{peak} [V/m]	143
Total S Deviation [dB]	0.49

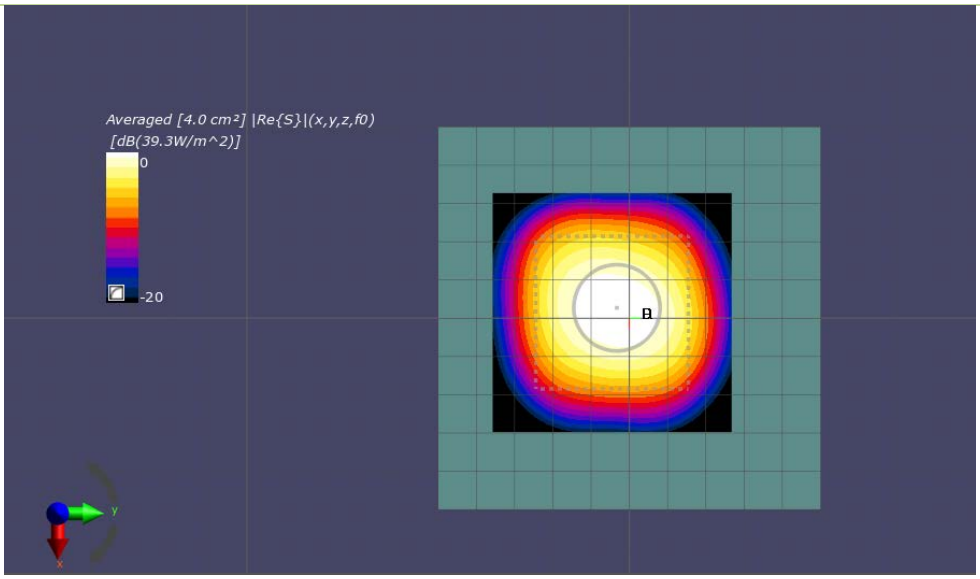

APPENDIX E: CALIBRATION CERTIFICATES

© 2019 PCTEST Engineering Laboratory, Inc.

Calibration Laboratory of
Schmid & Partner
Engineering AG
Zeughausstrasse 43, 8004 Zurich, Switzerland

S Schweizerischer Kalibrierdienst
C Service suisse d'étalonnage
Servizio svizzero di taratura
S Swiss Calibration Service

Accredited by the Swiss Accreditation Service (SAS)
The Swiss Accreditation Service is one of the signatories to the EA Multilateral Agreement for the recognition of calibration certificates

Accreditation No.: SCS 0108

Client PC Test

Certificate No: EUmmWV3-9389_Nov18/2

CALIBRATION CERTIFICATE (Replacement of No: EUmmWV3-9389_Nov18)

Object	EUmmWV3 - SN:9389
Calibration procedure(s)	QA CAL-02.v9, QA CAL-25.v7, QA CAL-42.v2 Calibration procedure for E-field probes optimized for close near field evaluations in air
Calibration date:	November 6, 2018

BN✓ 02-01-19

This calibration certificate documents the traceability to national standards, which realize the physical units of measurements (SI).
The measurements and the uncertainties with confidence probability are given on the following pages and are part of the certificate.

All calibrations have been conducted in the closed laboratory facility: environment temperature (22 ± 3)°C and humidity < 70%.

Calibration Equipment used (M&TE critical for calibration)

Primary Standards	ID	Cal Date (Certificate No.)	Scheduled Calibration
Power meter NRP	SN: 104778	04-Apr-18 (No. 217-02672/02673)	Apr-19
Power sensor NRP-Z91	SN: 103244	04-Apr-18 (No. 217-02672)	Apr-19
Power sensor NRP-Z91	SN: 103245	04-Apr-18 (No. 217-02673)	Apr-19
Reference 20 dB Attenuator	SN: S5277 (20x)	04-Apr-18 (No. 217-02682)	Apr-19
Reference Probe ER3DV6	SN: 2328	09-Oct-18 (No. ER3-2328_Oct18)	Oct-19
DAE4	SN: 789	07-Aug-18 (No. DAE4-789_Aug18)	Aug-19
Secondary Standards	ID	Check Date (in house)	Scheduled Check
Power meter E4419B	SN: GB41293874	06-Apr-16 (in house check Jun-18)	In house check: Jun-20
Power sensor E4412A	SN: MY41498087	06-Apr-16 (in house check Jun-18)	In house check: Jun-20
Power sensor E4412A	SN: 000110210	06-Apr-16 (in house check Jun-18)	In house check: Jun-20
RF generator HP 8648C	SN: US3642U01700	04-Aug-99 (in house check Jun-18)	In house check: Jun-20
Network Analyzer HP 8753E	SN: US37390585	18-Oct-01 (in house check Oct-18)	In house check: Oct-19

	Name	Function	Signature
Calibrated by:	Jeton Kastrati	Laboratory Technician	
Approved by:	Katja Pokovic	Technical Manager	

Issued: February 20, 2019

This calibration certificate shall not be reproduced except in full without written approval of the laboratory.

Glossary:

NORMx,y,z	sensitivity in free space
DCP	diode compression point
CF	crest factor (1/duty_cycle) of the RF signal
A, B, C, D	modulation dependent linearization parameters
Polarization φ	φ rotation around probe axis
Polarization ϑ	ϑ rotation around an axis that is in the plane normal to probe axis (at measurement center), i.e., ϑ = 0 is normal to probe axis
Connector Angle	information used in DASY system to align probe sensor X to the robot coordinate system
Sensor Angles	sensor deviation from the probe axis, used to calculate the field orientation and polarization
k	is the wave propagation direction

Calibration is Performed According to the Following Standards:

a) IEEE Std 1309-2005, "IEEE Standard for calibration of electromagnetic field sensors and probes, excluding antennas, from 9 kHz to 40 GHz", December 2005

Methods Applied and Interpretation of Parameters:

- *NORMx,y,z:* Assessed for E-field polarization ϑ = 0 for XY sensors and ϑ = 90 for Z sensor (f ≤ 900 MHz in TEM-cell; f > 1800 MHz: R22 waveguide). For frequencies > 6 GHz, the far field in front of waveguide horn antennas is measured for a set of frequencies in various waveguide bands up to 110 GHz.
- *DCPx,y,z:* DCP are numerical linearization parameters assessed based on the data of power sweep with CW signal (no uncertainty required). DCP does not depend on frequency nor media.
- *PAR:* PAR is the Peak to Average Ratio that is not calibrated but determined based on the signal characteristics
- The frequency sensor model parameters are determined prior to calibration based on a frequency sweep (sensor model involving resistors R, R_p, inductance L and capacitors C, C_p).
- *Ax,y,z; Bx,y,z; Cx,y,z; Dx,y,z; VRx,y,z: A, B, C, D* are numerical linearization parameters assessed based on the data of power sweep for specific modulation signal. The parameters do not depend on frequency nor media. *VR* is the maximum calibration range expressed in RMS voltage across the diode.
- *Sensor Offset*: The sensor offset corresponds to the mechanical from the probe tip (on probe axis). No tolerance required.
- *Connector Angle*: The angle is assessed using the information gained by determining the *NORMx* (no uncertainty required).
- *Equivalent Sensor Angle*: The two probe sensors are mounted in the same plane at different angles. The angles are assessed using the information gained by determining the *NORMx* (no uncertainty required).
- *Spherical isotropy (3D deviation from isotropy)*: in a locally homogeneous field realized using an open waveguide / horn setup.

DASY - Parameters of Probe: EUmmWV3 - SN:9389

Basic Calibration Parameters

	Sensor X	Sensor Y	Unc (k=2)
Norm ($\mu V/(V/m)^2$)	0.01988	0.02280	± 10.1 %
DCP (mV)[B]	113.0	102.0	
Equivalent Sensor Angle	-58.3	32.8	

Calibration results for Frequency Response (750 MHz – 110 GHz)

Frequency GHz	Target E-Field V/m	Deviation Sensor X dB	Deviation Sensor Y dB	Unc (k=2) dB
0.75	77.2	-0.21	0.35	± 0.43 dB
1.8	140.4	0.14	0.24	± 0.43 dB
2	133.0	0.08	0.12	± 0.43 dB
2.2	124.8	0.01	-0.02	± 0.43 dB
2.5	123.0	-0.06	-0.16	± 0.43 dB
3.5	256.2	0.04	-0.28	± 0.43 dB
3.7	249.8	0.08	-0.27	± 0.43 dB
6.6	41.8	0.36	0.42	± 0.98 dB
8	48.4	-0.06	-0.28	± 0.98 dB
10	54.4	-0.05	-0.05	± 0.98 dB
15	71.5	0.51	-0.14	± 0.98 dB
18	85.3	-0.45	-0.05	± 0.98 dB
26.6	96.9	-0.11	0.14	± 0.98 dB
30	92.6	0.18	0.18	± 0.98 dB
35	93.7	-0.30	-0.11	± 0.98 dB
40	91.5	-0.57	-0.44	± 0.98 dB
50	19.6	-0.24	0.23	± 0.98 dB
55	22.4	0.41	0.30	± 0.98 dB
60	23.0	0.00	-0.09	± 0.98 dB
65	27.4	-0.67	-0.40	± 0.98 dB
70	23.9	-0.65	-0.52	± 0.98 dB
75	20.0	-0.57	-0.47	± 0.98 dB
75	14.8	-0.12	0.09	± 0.98 dB
80	22.5	0.02	0.18	± 0.98 dB
85	22.8	0.05	0.03	± 0.98 dB
90	23.8	0.03	0.06	± 0.98 dB
92	23.9	0.02	-0.12	± 0.98 dB
95	20.5	-0.17	-0.26	± 0.98 dB
97	24.4	0.02	-0.22	± 0.98 dB
100	22.6	0.12	-0.13	± 0.98 dB
105	22.7	-0.24	-0.17	± 0.98 dB
110	19.7	-0.24	-0.08	± 0.98 dB

The reported uncertainty of measurement is stated as the standard uncertainty of measurement multiplied by the coverage factor k=2, which for a normal distribution corresponds to a coverage probability of approximately 95%.

[B] Numerical linearization parameter: uncertainty not required.

[E] Uncertainty is determined using the max. deviation from linear response applying rectangular distribution and is expressed for the square of the field value.

DASY - Parameters of Probe: EUmmWV3 - SN:9389

Calibration Results for Modulation Response

UID	Communication System Name		A dB	B dB√μV	C	D dB	VR mV	Max dev.	Max Unc[E] (k=2)
0	CW	X	0.00	0.00	1.00	0.00	121.7	± 3.8 %	± 4.7 %
		Y	0.00	0.00	1.00		58.3		
10352-AAA	Pulse Waveform (200Hz, 10%)	X	1.72	60.00	12.48	10.00	6.0	± 1.9 %	± 9.6 %
		Y	1.95	60.00	12.91		6.0		
10353-AAA	Pulse Waveform (200Hz, 20%)	X	14.00	80.00	17.00	6.99	12.0	± 0.9 %	± 9.6 %
		Y	1.09	60.00	12.37		12.0		
10354-AAA	Pulse Waveform (200Hz, 40%)	X	0.55	60.00	10.89	3.98	23.0	± 0.9 %	± 9.6 %
		Y	0.60	60.00	11.54		23.0		
10355-AAA	Pulse Waveform (200Hz, 60%)	X	0.34	60.00	10.31	2.22	27.0	± 1.0 %	± 9.6 %
		Y	0.17	67.15	1.82		27.0		
10387-AAA	QPSK Waveform, 1 MHz	X	0.35	110.01	6.91	0.00	22.0	± 0.6 %	± 9.6 %
		Y	0.00	70.39	18.81		22.0		
10388-AAA	QPSK Waveform, 10 MHz	X	1.11	60.00	11.75	0.00	22.0	± 1.1 %	± 9.6 %
		Y	1.42	60.00	11.34		22.0		
10396-AAA	64-QAM Waveform, 100 kHz	X	1.68	60.00	13.52	3.01	17.0	± 0.8 %	± 9.6 %
		Y	1.94	60.00	13.61		17.0		
10399-AAA	64-QAM Waveform, 40 MHz	X	1.93	60.00	12.29	0.00	19.0	± 1.6 %	± 9.6 %
		Y	2.23	60.00	12.20		19.0		
10414-AAA	WLAN CCDF, 64-QAM, 40MHz	X	2.81	60.00	12.72	0.00	12.0	± 1.4 %	± 9.6 %
		Y	3.22	60.00	12.60		12.0		

Note: For details on all calibrated UID parameters see Appendix

Calibration Results for Linearity Response

Frequency GHz	Target E-Field V/m	Deviation Sensor X dB	Deviation Sensor Y dB	Unc (k=2) dB
0.9	50.0	0.07	-0.14	± 0.2 dB
0.9	100.0	-0.01	0.01	± 0.2 dB
0.9	500.0	0.00	0.00	± 0.2 dB
0.9	1000.0	0.01	0.02	± 0.2 dB
0.9	1500.0	0.00	0.03	± 0.2 dB
0.9	2000.0	0.00	0.00	± 0.2 dB

Sensor Frequency Model Parameters

	Sensor X	Sensor Y
R (Ω)	42.51	41.62
R_p (Ω)	94.34	92.12
L (nH)	0.03051	0.03188
C (pF)	0.2518	0.2571
C_p (pF)	0.1293	0.1209

Sensor Model Parameters

	C1 fF	C2 fF	α V^{-1}	T1 $ms.V^{-2}$	T2 $ms.V^{-1}$	T3 ms	T4 V^{-2}	T5 V^{-1}	T6
X	20.9	145.90	31.43	0.92	2.19	4.97	0.00	0.67	1.00
Y	18.3	136.24	35.34	0.00	1.59	5.00	0.00	1.06	1.00

DASY - Parameters of Probe: EUmmWV3 - SN:9389

Other Probe Parameters

Sensor Arrangement	Rectangular
Connector Angle (°)	-75.1
Mechanical Surface Detection Mode	enabled
Optical Surface Detection Mode	disabled
Probe Overall Length	320 mm
Probe Body Diameter	8 mm
Tip Length	23 mm
Tip Diameter	8.0 mm
Probe Tip to Sensor X Calibration Point	1.5 mm
Probe Tip to Sensor Y Calibration Point	1.5 mm

Deviation from Isotropy in Air

f = 30 GHz

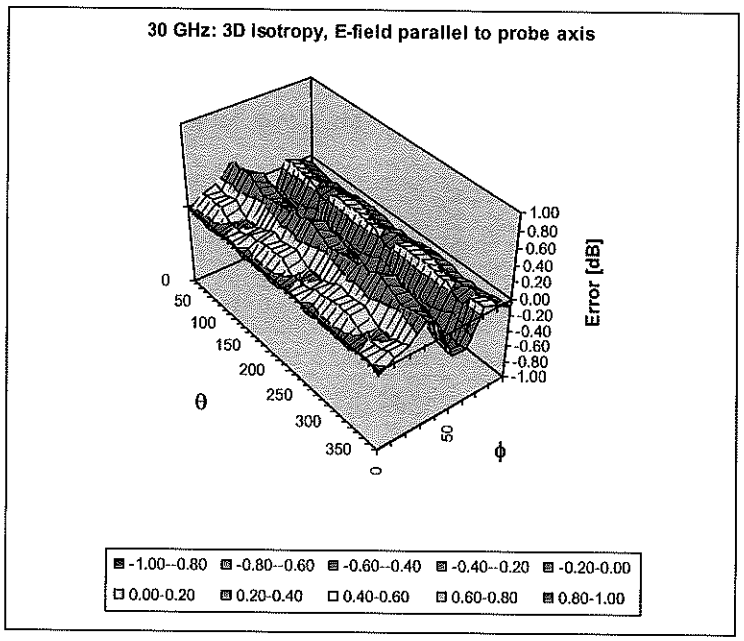

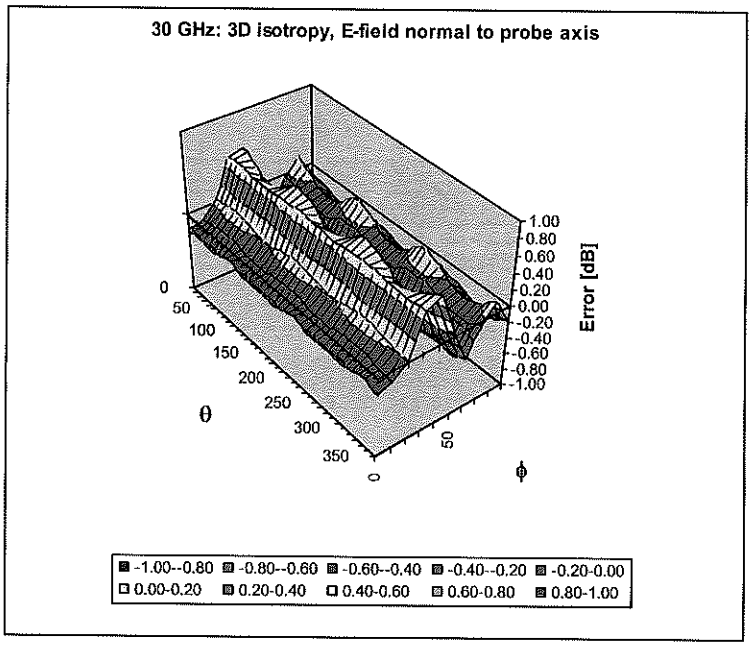

Probe isotropy for E_{tot}: probe rotated φ = 0° to 360°, tilted from field propagation direction $\vec{k}$
Parallel to the field propagation (ψ =0° - 90°): deviation within ± 0.48 dB
Normal to field orientation (ϑ =0° - 90°): deviation within ± 0.52 dB

Appendix: Modulation Calibration Parameters

UID	Rev	Communication System Name	Group	PAR (dB)	Unc[E] (k=2)
0		CW	CW	0.00	± 4.7 %
10010	CAA	SAR Validation (Square, 100ms, 10ms)	Test	10.00	± 9.6 %
10011	CAB	UMTS-FDD (WCDMA)	WCDMA	2.91	± 9.6 %
10012	CAB	IEEE 802.11b WiFi 2.4 GHz (DSSS, 1 Mbps)	WLAN	1.87	± 9.6 %
10013	CAB	IEEE 802.11g WiFi 2.4 GHz (DSSS-OFDM, 6 Mbps)	WLAN	9.46	± 9.6 %
10021	DAC	GSM-FDD (TDMA, GMSK)	GSM	9.39	± 9.6 %
10023	DAC	GPRS-FDD (TDMA, GMSK, TN 0)	GSM	9.57	± 9.6 %
10024	DAC	GPRS-FDD (TDMA, GMSK, TN 0-1)	GSM	6.56	± 9.6 %
10025	DAC	EDGE-FDD (TDMA, 8PSK, TN 0)	GSM	12.62	± 9.6 %
10026	DAC	EDGE-FDD (TDMA, 8PSK, TN 0-1)	GSM	9.55	± 9.6 %
10027	DAC	GPRS-FDD (TDMA, GMSK, TN 0-1-2)	GSM	4.80	± 9.6 %
10028	DAC	GPRS-FDD (TDMA, GMSK, TN 0-1-2-3)	GSM	3.55	± 9.6 %
10029	DAC	EDGE-FDD (TDMA, 8PSK, TN 0-1-2)	GSM	7.78	± 9.6 %
10030	CAA	IEEE 802.15.1 Bluetooth (GFSK, DH1)	Bluetooth	5.30	± 9.6 %
10031	CAA	IEEE 802.15.1 Bluetooth (GFSK, DH3)	Bluetooth	1.87	± 9.6 %
10032	CAA	IEEE 802.15.1 Bluetooth (GFSK, DH5)	Bluetooth	1.16	± 9.6 %
10033	CAA	IEEE 802.15.1 Bluetooth (PI/4-DQPSK, DH1)	Bluetooth	7.74	± 9.6 %
10034	CAA	IEEE 802.15.1 Bluetooth (PI/4-DQPSK, DH3)	Bluetooth	4.53	± 9.6 %
10035	CAA	IEEE 802.15.1 Bluetooth (PI/4-DQPSK, DH5)	Bluetooth	3.83	± 9.6 %
10036	CAA	IEEE 802.15.1 Bluetooth (8-DPSK, DH1)	Bluetooth	8.01	± 9.6 %
10037	CAA	IEEE 802.15.1 Bluetooth (8-DPSK, DH3)	Bluetooth	4.77	± 9.6 %
10038	CAA	IEEE 802.15.1 Bluetooth (8-DPSK, DH5)	Bluetooth	4.10	± 9.6 %
10039	CAB	CDMA2000 (1xRTT, RC1)	CDMA2000	4.57	± 9.6 %
10042	CAB	IS-54 / IS-136 FDD (TDMA/FDM, PI/4-DQPSK, Halfrate)	AMPS	7.78	± 9.6 %
10044	CAA	IS-91/EIA/TIA-553 FDD (FDMA, FM)	AMPS	0.00	± 9.6 %
10048	CAA	DECT (TDD, TDMA/FDM, GFSK, Full Slot, 24)	DECT	13.80	± 9.6 %
10049	CAA	DECT (TDD, TDMA/FDM, GFSK, Double Slot, 12)	DECT	10.79	± 9.6 %
10056	CAA	UMTS-TDD (TD-SCDMA, 1.28 Mcps)	TD-SCDMA	11.01	± 9.6 %
10058	DAC	EDGE-FDD (TDMA, 8PSK, TN 0-1-2-3)	GSM	6.52	± 9.6 %
10059	CAB	IEEE 802.11b WiFi 2.4 GHz (DSSS, 2 Mbps)	WLAN	2.12	± 9.6 %
10060	CAB	IEEE 802.11b WiFi 2.4 GHz (DSSS, 5.5 Mbps)	WLAN	2.83	± 9.6 %
10061	CAB	IEEE 802.11b WiFi 2.4 GHz (DSSS, 11 Mbps)	WLAN	3.60	± 9.6 %
10062	CAC	IEEE 802.11a/h WiFi 5 GHz (OFDM, 6 Mbps)	WLAN	8.68	± 9.6 %
10063	CAC	IEEE 802.11a/h WiFi 5 GHz (OFDM, 9 Mbps)	WLAN	8.63	± 9.6 %
10064	CAC	IEEE 802.11a/h WiFi 5 GHz (OFDM, 12 Mbps)	WLAN	9.09	± 9.6 %
10065	CAC	IEEE 802.11a/h WiFi 5 GHz (OFDM, 18 Mbps)	WLAN	9.00	± 9.6 %
10066	CAC	IEEE 802.11a/h WiFi 5 GHz (OFDM, 24 Mbps)	WLAN	9.38	± 9.6 %
10067	CAC	IEEE 802.11a/h WiFi 5 GHz (OFDM, 36 Mbps)	WLAN	10.12	± 9.6 %
10068	CAC	IEEE 802.11a/h WiFi 5 GHz (OFDM, 48 Mbps)	WLAN	10.24	± 9.6 %
10069	CAC	IEEE 802.11a/h WiFi 5 GHz (OFDM, 54 Mbps)	WLAN	10.56	± 9.6 %
10071	CAB	IEEE 802.11g WiFi 2.4 GHz (DSSS/OFDM, 9 Mbps)	WLAN	9.83	± 9.6 %
10072	CAB	IEEE 802.11g WiFi 2.4 GHz (DSSS/OFDM, 12 Mbps)	WLAN	9.62	± 9.6 %
10073	CAB	IEEE 802.11g WiFi 2.4 GHz (DSSS/OFDM, 18 Mbps)	WLAN	9.94	± 9.6 %
10074	CAB	IEEE 802.11g WiFi 2.4 GHz (DSSS/OFDM, 24 Mbps)	WLAN	10.30	± 9.6 %
10075	CAB	IEEE 802.11g WiFi 2.4 GHz (DSSS/OFDM, 36 Mbps)	WLAN	10.77	± 9.6 %
10076	CAB	IEEE 802.11g WiFi 2.4 GHz (DSSS/OFDM, 48 Mbps)	WLAN	10.94	± 9.6 %
10077	CAB	IEEE 802.11g WiFi 2.4 GHz (DSSS/OFDM, 54 Mbps)	WLAN	11.00	± 9.6 %
10081	CAB	CDMA2000 (1xRTT, RC3)	CDMA2000	3.97	± 9.6 %
10082	CAB	IS-54 / IS-136 FDD (TDMA/FDM, PI/4-DQPSK, Fullrate)	AMPS	4.77	± 9.6 %
10090	DAC	GPRS-FDD (TDMA, GMSK, TN 0-4)	GSM	6.56	± 9.6 %
10097	CAB	UMTS-FDD (HSDPA)	WCDMA	3.98	± 9.6 %
10098	CAB	UMTS-FDD (HSUPA, Subtest 2)	WCDMA	3.98	± 9.6 %
10099	DAC	EDGE-FDD (TDMA, 8PSK, TN 0-4)	GSM	9.55	± 9.6 %
10100	CAE	LTE-FDD (SC-FDMA, 100% RB, 20 MHz, QPSK)	LTE-FDD	5.67	± 9.6 %
10101	CAE	LTE-FDD (SC-FDMA, 100% RB, 20 MHz, 16-QAM)	LTE-FDD	6.42	± 9.6 %
10102	CAE	LTE-FDD (SC-FDMA, 100% RB, 20 MHz, 64-QAM)	LTE-FDD	6.60	± 9.6 %
10103	CAG	LTE-TDD (SC-FDMA, 100% RB, 20 MHz, QPSK)	LTE-TDD	9.29	± 9.6 %
10104	CAG	LTE-TDD (SC-FDMA, 100% RB, 20 MHz, 16-QAM)	LTE-TDD	9.97	± 9.6 %
10105	CAG	LTE-TDD (SC-FDMA, 100% RB, 20 MHz, 64-QAM)	LTE-TDD	10.01	± 9.6 %
10108	CAG	LTE-FDD (SC-FDMA, 100% RB, 10 MHz, QPSK)	LTE-FDD	5.80	± 9.6 %

10109	CAG	LTE-FDD (SC-FDMA, 100% RB, 10 MHz, 16-QAM)	LTE-FDD	6.43	± 9.6 %
10110	CAG	LTE-FDD (SC-FDMA, 100% RB, 5 MHz, QPSK)	LTE-FDD	5.75	± 9.6 %
10111	CAG	LTE-FDD (SC-FDMA, 100% RB, 5 MHz, 16-QAM)	LTE-FDD	6.44	± 9.6 %
10112	CAG	LTE-FDD (SC-FDMA, 100% RB, 10 MHz, 64-QAM)	LTE-FDD	6.59	± 9.6 %
10113	CAG	LTE-FDD (SC-FDMA, 100% RB, 5 MHz, 64-QAM)	LTE-FDD	6.62	± 9.6 %
10114	CAC	IEEE 802.11n (HT Greenfield, 13.5 Mbps, BPSK)	WLAN	8.10	± 9.6 %
10115	CAC	IEEE 802.11n (HT Greenfield, 81 Mbps, 16-QAM)	WLAN	8.46	± 9.6 %
10116	CAC	IEEE 802.11n (HT Greenfield, 135 Mbps, 64-QAM)	WLAN	8.15	± 9.6 %
10117	CAC	IEEE 802.11n (HT Mixed, 13.5 Mbps, BPSK)	WLAN	8.07	± 9.6 %
10118	CAC	IEEE 802.11n (HT Mixed, 81 Mbps, 16-QAM)	WLAN	8.59	± 9.6 %
10119	CAC	IEEE 802.11n (HT Mixed, 135 Mbps, 64-QAM)	WLAN	8.13	± 9.6 %
10140	CAE	LTE-FDD (SC-FDMA, 100% RB, 15 MHz, 16-QAM)	LTE-FDD	6.49	± 9.6 %
10141	CAE	LTE-FDD (SC-FDMA, 100% RB, 15 MHz, 64-QAM)	LTE-FDD	6.53	± 9.6 %
10142	CAE	LTE-FDD (SC-FDMA, 100% RB, 3 MHz, QPSK)	LTE-FDD	5.73	± 9.6 %
10143	CAE	LTE-FDD (SC-FDMA, 100% RB, 3 MHz, 16-QAM)	LTE-FDD	6.35	± 9.6 %
10144	CAE	LTE-FDD (SC-FDMA, 100% RB, 3 MHz, 64-QAM)	LTE-FDD	6.65	± 9.6 %
10145	CAF	LTE-FDD (SC-FDMA, 100% RB, 1.4 MHz, QPSK)	LTE-FDD	5.76	± 9.6 %
10146	CAF	LTE-FDD (SC-FDMA, 100% RB, 1.4 MHz, 16-QAM)	LTE-FDD	6.41	± 9.6 %
10147	CAF	LTE-FDD (SC-FDMA, 100% RB, 1.4 MHz, 64-QAM)	LTE-FDD	6.72	± 9.6 %
10149	CAE	LTE-FDD (SC-FDMA, 50% RB, 20 MHz, 16-QAM)	LTE-FDD	6.42	± 9.6 %
10150	CAE	LTE-FDD (SC-FDMA, 50% RB, 20 MHz, 64-QAM)	LTE-FDD	6.60	± 9.6 %
10151	CAG	LTE-TDD (SC-FDMA, 50% RB, 20 MHz, QPSK)	LTE-TDD	9.28	± 9.6 %
10152	CAG	LTE-TDD (SC-FDMA, 50% RB, 20 MHz, 16-QAM)	LTE-TDD	9.92	± 9.6 %
10153	CAG	LTE-TDD (SC-FDMA, 50% RB, 20 MHz, 64-QAM)	LTE-TDD	10.05	± 9.6 %
10154	CAG	LTE-FDD (SC-FDMA, 50% RB, 10 MHz, QPSK)	LTE-FDD	5.75	± 9.6 %
10155	CAG	LTE-FDD (SC-FDMA, 50% RB, 10 MHz, 16-QAM)	LTE-FDD	6.43	± 9.6 %
10156	CAG	LTE-FDD (SC-FDMA, 50% RB, 5 MHz, QPSK)	LTE-FDD	5.79	± 9.6 %
10157	CAG	LTE-FDD (SC-FDMA, 50% RB, 5 MHz, 16-QAM)	LTE-FDD	6.49	± 9.6 %
10158	CAG	LTE-FDD (SC-FDMA, 50% RB, 10 MHz, 64-QAM)	LTE-FDD	6.62	± 9.6 %
10159	CAG	LTE-FDD (SC-FDMA, 50% RB, 5 MHz, 64-QAM)	LTE-FDD	6.56	± 9.6 %
10160	CAE	LTE-FDD (SC-FDMA, 50% RB, 15 MHz, QPSK)	LTE-FDD	5.82	± 9.6 %
10161	CAE	LTE-FDD (SC-FDMA, 50% RB, 15 MHz, 16-QAM)	LTE-FDD	6.43	± 9.6 %
10162	CAE	LTE-FDD (SC-FDMA, 50% RB, 15 MHz, 64-QAM)	LTE-FDD	6.58	± 9.6 %
10166	CAF	LTE-FDD (SC-FDMA, 50% RB, 1.4 MHz, QPSK)	LTE-FDD	5.46	± 9.6 %
10167	CAF	LTE-FDD (SC-FDMA, 50% RB, 1.4 MHz, 16-QAM)	LTE-FDD	6.21	± 9.6 %
10168	CAF	LTE-FDD (SC-FDMA, 50% RB, 1.4 MHz, 64-QAM)	LTE-FDD	6.79	± 9.6 %
10169	CAE	LTE-FDD (SC-FDMA, 1 RB, 20 MHz, QPSK)	LTE-FDD	5.73	± 9.6 %
10170	CAE	LTE-FDD (SC-FDMA, 1 RB, 20 MHz, 16-QAM)	LTE-FDD	6.52	± 9.6 %
10171	AAE	LTE-FDD (SC-FDMA, 1 RB, 20 MHz, 64-QAM)	LTE-FDD	6.49	± 9.6 %
10172	CAG	LTE-TDD (SC-FDMA, 1 RB, 20 MHz, QPSK)	LTE-TDD	9.21	± 9.6 %
10173	CAG	LTE-TDD (SC-FDMA, 1 RB, 20 MHz, 16-QAM)	LTE-TDD	9.48	± 9.6 %
10174	CAG	LTE-TDD (SC-FDMA, 1 RB, 20 MHz, 64-QAM)	LTE-TDD	10.25	± 9.6 %
10175	CAG	LTE-FDD (SC-FDMA, 1 RB, 10 MHz, QPSK)	LTE-FDD	5.72	± 9.6 %
10176	CAG	LTE-FDD (SC-FDMA, 1 RB, 10 MHz, 16-QAM)	LTE-FDD	6.52	± 9.6 %
10177	CAI	LTE-FDD (SC-FDMA, 1 RB, 5 MHz, QPSK)	LTE-FDD	5.73	± 9.6 %
10178	CAG	LTE-FDD (SC-FDMA, 1 RB, 5 MHz, 16-QAM)	LTE-FDD	6.52	± 9.6 %
10179	CAG	LTE-FDD (SC-FDMA, 1 RB, 10 MHz, 64-QAM)	LTE-FDD	6.50	± 9.6 %
10180	CAG	LTE-FDD (SC-FDMA, 1 RB, 5 MHz, 64-QAM)	LTE-FDD	6.50	± 9.6 %
10181	CAE	LTE-FDD (SC-FDMA, 1 RB, 15 MHz, QPSK)	LTE-FDD	5.72	± 9.6 %
10182	CAE	LTE-FDD (SC-FDMA, 1 RB, 15 MHz, 16-QAM)	LTE-FDD	6.52	± 9.6 %
10183	AAD	LTE-FDD (SC-FDMA, 1 RB, 15 MHz, 64-QAM)	LTE-FDD	6.50	± 9.6 %
10184	CAE	LTE-FDD (SC-FDMA, 1 RB, 3 MHz, QPSK)	LTE-FDD	5.73	± 9.6 %
10185	CAE	LTE-FDD (SC-FDMA, 1 RB, 3 MHz, 16-QAM)	LTE-FDD	6.51	± 9.6 %
10186	AAE	LTE-FDD (SC-FDMA, 1 RB, 3 MHz, 64-QAM)	LTE-FDD	6.50	± 9.6 %
10187	CAF	LTE-FDD (SC-FDMA, 1 RB, 1.4 MHz, QPSK)	LTE-FDD	5.73	± 9.6 %
10188	CAF	LTE-FDD (SC-FDMA, 1 RB, 1.4 MHz, 16-QAM)	LTE-FDD	6.52	± 9.6 %
10189	AAF	LTE-FDD (SC-FDMA, 1 RB, 1.4 MHz, 64-QAM)	LTE-FDD	6.50	± 9.6 %
10193	CAC	IEEE 802.11n (HT Greenfield, 6.5 Mbps, BPSK)	WLAN	8.09	± 9.6 %
10194	CAC	IEEE 802.11n (HT Greenfield, 39 Mbps, 16-QAM)	WLAN	8.12	± 9.6 %
10195	CAC	IEEE 802.11n (HT Greenfield, 65 Mbps, 64-QAM)	WLAN	8.21	± 9.6 %
10196	CAC	IEEE 802.11n (HT Mixed, 6.5 Mbps, BPSK)	WLAN	8.10	± 9.6 %
10197	CAC	IEEE 802.11n (HT Mixed, 39 Mbps, 16-QAM)	WLAN	8.13	± 9.6 %
10198	CAC	IEEE 802.11n (HT Mixed, 65 Mbps, 64-QAM)	WLAN	8.27	± 9.6 %
10219	CAC	IEEE 802.11n (HT Mixed, 7.2 Mbps, BPSK)	WLAN	8.03	± 9.6 %

10220	CAC	IEEE 802.11n (HT Mixed, 43.3 Mbps, 16-QAM)	WLAN	8.13	± 9.6 %
10221	CAC	IEEE 802.11n (HT Mixed, 72.2 Mbps, 64-QAM)	WLAN	8.27	± 9.6 %
10222	CAC	IEEE 802.11n (HT Mixed, 15 Mbps, BPSK)	WLAN	8.06	± 9.6 %
10223	CAC	IEEE 802.11n (HT Mixed, 90 Mbps, 16-QAM)	WLAN	8.48	± 9.6 %
10224	CAC	IEEE 802.11n (HT Mixed, 150 Mbps, 64-QAM)	WLAN	8.08	± 9.6 %
10225	CAB	UMTS-FDD (HSPA+)	WCDMA	5.97	± 9.6 %
10226	CAA	LTE-TDD (SC-FDMA, 1 RB, 1.4 MHz, 16-QAM)	LTE-TDD	9.49	± 9.6 %
10227	CAA	LTE-TDD (SC-FDMA, 1 RB, 1.4 MHz, 64-QAM)	LTE-TDD	10.26	± 9.6 %
10228	CAA	LTE-TDD (SC-FDMA, 1 RB, 1.4 MHz, QPSK)	LTE-TDD	9.22	± 9.6 %
10229	CAC	LTE-TDD (SC-FDMA, 1 RB, 3 MHz, 16-QAM)	LTE-TDD	9.48	± 9.6 %
10230	CAC	LTE-TDD (SC-FDMA, 1 RB, 3 MHz, 64-QAM)	LTE-TDD	10.25	± 9.6 %
10231	CAC	LTE-TDD (SC-FDMA, 1 RB, 3 MHz, QPSK)	LTE-TDD	9.19	± 9.6 %
10232	CAF	LTE-TDD (SC-FDMA, 1 RB, 5 MHz, 16-QAM)	LTE-TDD	9.48	± 9.6 %
10233	CAF	LTE-TDD (SC-FDMA, 1 RB, 5 MHz, 64-QAM)	LTE-TDD	10.25	± 9.6 %
10234	CAF	LTE-TDD (SC-FDMA, 1 RB, 5 MHz, QPSK)	LTE-TDD	9.21	± 9.6 %
10235	CAF	LTE-TDD (SC-FDMA, 1 RB, 10 MHz, 16-QAM)	LTE-TDD	9.48	± 9.6 %
10236	CAF	LTE-TDD (SC-FDMA, 1 RB, 10 MHz, 64-QAM)	LTE-TDD	10.25	± 9.6 %
10237	CAF	LTE-TDD (SC-FDMA, 1 RB, 10 MHz, QPSK)	LTE-TDD	9.21	± 9.6 %
10238	CAF	LTE-TDD (SC-FDMA, 1 RB, 15 MHz, 16-QAM)	LTE-TDD	9.48	± 9.6 %
10239	CAF	LTE-TDD (SC-FDMA, 1 RB, 15 MHz, 64-QAM)	LTE-TDD	10.25	± 9.6 %
10240	CAF	LTE-TDD (SC-FDMA, 1 RB, 15 MHz, QPSK)	LTE-TDD	9.21	± 9.6 %
10241	CAA	LTE-TDD (SC-FDMA, 50% RB, 1.4 MHz, 16-QAM)	LTE-TDD	9.82	± 9.6 %
10242	CAA	LTE-TDD (SC-FDMA, 50% RB, 1.4 MHz, 64-QAM)	LTE-TDD	9.86	± 9.6 %
10243	CAA	LTE-TDD (SC-FDMA, 50% RB, 1.4 MHz, QPSK)	LTE-TDD	9.46	± 9.6 %
10244	CAC	LTE-TDD (SC-FDMA, 50% RB, 3 MHz, 16-QAM)	LTE-TDD	10.06	± 9.6 %
10245	CAC	LTE-TDD (SC-FDMA, 50% RB, 3 MHz, 64-QAM)	LTE-TDD	10.06	± 9.6 %
10246	CAC	LTE-TDD (SC-FDMA, 50% RB, 3 MHz, QPSK)	LTE-TDD	9.30	± 9.6 %
10247	CAF	LTE-TDD (SC-FDMA, 50% RB, 5 MHz, 16-QAM)	LTE-TDD	9.91	± 9.6 %
10248	CAF	LTE-TDD (SC-FDMA, 50% RB, 5 MHz, 64-QAM)	LTE-TDD	10.09	± 9.6 %
10249	CAF	LTE-TDD (SC-FDMA, 50% RB, 5 MHz, QPSK)	LTE-TDD	9.29	± 9.6 %
10250	CAF	LTE-TDD (SC-FDMA, 50% RB, 10 MHz, 16-QAM)	LTE-TDD	9.81	± 9.6 %
10251	CAF	LTE-TDD (SC-FDMA, 50% RB, 10 MHz, 64-QAM)	LTE-TDD	10.17	± 9.6 %
10252	CAF	LTE-TDD (SC-FDMA, 50% RB, 10 MHz, QPSK)	LTE-TDD	9.24	± 9.6 %
10253	CAF	LTE-TDD (SC-FDMA, 50% RB, 15 MHz, 16-QAM)	LTE-TDD	9.90	± 9.6 %
10254	CAF	LTE-TDD (SC-FDMA, 50% RB, 15 MHz, 64-QAM)	LTE-TDD	10.14	± 9.6 %
10255	CAF	LTE-TDD (SC-FDMA, 50% RB, 15 MHz, QPSK)	LTE-TDD	9.20	± 9.6 %
10256	CAA	LTE-TDD (SC-FDMA, 100% RB, 1.4 MHz, 16-QAM)	LTE-TDD	9.96	± 9.6 %
10257	CAA	LTE-TDD (SC-FDMA, 100% RB, 1.4 MHz, 64-QAM)	LTE-TDD	10.08	± 9.6 %
10258	CAA	LTE-TDD (SC-FDMA, 100% RB, 1.4 MHz, QPSK)	LTE-TDD	9.34	± 9.6 %
10259	CAC	LTE-TDD (SC-FDMA, 100% RB, 3 MHz, 16-QAM)	LTE-TDD	9.98	± 9.6 %
10260	CAC	LTE-TDD (SC-FDMA, 100% RB, 3 MHz, 64-QAM)	LTE-TDD	9.97	± 9.6 %
10261	CAC	LTE-TDD (SC-FDMA, 100% RB, 3 MHz, QPSK)	LTE-TDD	9.24	± 9.6 %
10262	CAF	LTE-TDD (SC-FDMA, 100% RB, 5 MHz, 16-QAM)	LTE-TDD	9.83	± 9.6 %
10263	CAF	LTE-TDD (SC-FDMA, 100% RB, 5 MHz, 64-QAM)	LTE-TDD	10.16	± 9.6 %
10264	CAF	LTE-TDD (SC-FDMA, 100% RB, 5 MHz, QPSK)	LTE-TDD	9.23	± 9.6 %
10265	CAF	LTE-TDD (SC-FDMA, 100% RB, 10 MHz, 16-QAM)	LTE-TDD	9.92	± 9.6 %
10266	CAF	LTE-TDD (SC-FDMA, 100% RB, 10 MHz, 64-QAM)	LTE-TDD	10.07	± 9.6 %
10267	CAF	LTE-TDD (SC-FDMA, 100% RB, 10 MHz, QPSK)	LTE-TDD	9.30	± 9.6 %
10268	CAF	LTE-TDD (SC-FDMA, 100% RB, 15 MHz, 16-QAM)	LTE-TDD	10.06	± 9.6 %
10269	CAF	LTE-TDD (SC-FDMA, 100% RB, 15 MHz, 64-QAM)	LTE-TDD	10.13	± 9.6 %
10270	CAF	LTE-TDD (SC-FDMA, 100% RB, 15 MHz, QPSK)	LTE-TDD	9.58	± 9.6 %
10274	CAB	UMTS-FDD (HSUPA, Subtest 5, 3GPP Rel8.10)	WCDMA	4.87	± 9.6 %
10275	CAB	UMTS-FDD (HSUPA, Subtest 5, 3GPP Rel8.4)	WCDMA	3.96	± 9.6 %
10277	CAA	PHS (QPSK)	PHS	11.81	± 9.6 %
10278	CAA	PHS (QPSK, BW 884MHz, Rolloff 0.5)	PHS	11.81	± 9.6 %
10279	CAA	PHS (QPSK, BW 884MHz, Rolloff 0.38)	PHS	12.18	± 9.6 %
10290	AAB	CDMA2000, RC1, SO55, Full Rate	CDMA2000	3.91	± 9.6 %
10291	AAB	CDMA2000, RC3, SO55, Full Rate	CDMA2000	3.46	± 9.6 %
10292	AAB	CDMA2000, RC3, SO32, Full Rate	CDMA2000	3.39	± 9.6 %
10293	AAB	CDMA2000, RC3, SO3, Full Rate	CDMA2000	3.50	± 9.6 %
10295	AAB	CDMA2000, RC1, SO3, 1/8th Rate 25 fr.	CDMA2000	12.49	± 9.6 %
10297	AAD	LTE-FDD (SC-FDMA, 50% RB, 20 MHz, QPSK)	LTE-FDD	5.81	± 9.6 %
10298	AAD	LTE-FDD (SC-FDMA, 50% RB, 3 MHz, QPSK)	LTE-FDD	5.72	± 9.6 %
10299	AAD	LTE-FDD (SC-FDMA, 50% RB, 3 MHz, 16-QAM)	LTE-FDD	6.39	± 9.6 %

10300	AAD	LTE-FDD (SC-FDMA, 50% RB, 3 MHz, 64-QAM)	LTE-FDD	6.60	± 9.6 %
10301	AAA	IEEE 802.16e WiMAX (29:18, 5ms, 10MHz, QPSK, PUSC)	WiMAX	12.03	± 9.6 %
10302	AAA	IEEE 802.16e WiMAX (29:18, 5ms, 10MHz, QPSK, PUSC, 3 CTRL symbols)	WiMAX	12.57	± 9.6 %
10303	AAA	IEEE 802.16e WiMAX (31:15, 5ms, 10MHz, 64QAM, PUSC)	WiMAX	12.52	± 9.6 %
10304	AAA	IEEE 802.16e WiMAX (29:18, 5ms, 10MHz, 64QAM, PUSC)	WiMAX	11.86	± 9.6 %
10305	AAA	IEEE 802.16e WiMAX (31:15, 10ms, 10MHz, 64QAM, PUSC, 15 symbols)	WiMAX	15.24	± 9.6 %
10306	AAA	IEEE 802.16e WiMAX (29:18, 10ms, 10MHz, 64QAM, PUSC, 18 symbols)	WiMAX	14.67	± 9.6 %
10307	AAA	IEEE 802.16e WiMAX (29:18, 10ms, 10MHz, QPSK, PUSC, 18 symbols)	WiMAX	14.49	± 9.6 %
10308	AAA	IEEE 802.16e WiMAX (29:18, 10ms, 10MHz, 16QAM, PUSC)	WiMAX	14.46	± 9.6 %
10309	AAA	IEEE 802.16e WiMAX (29:18, 10ms, 10MHz, 16QAM, AMC 2x3, 18 symbols)	WiMAX	14.58	± 9.6 %
10310	AAA	IEEE 802.16e WiMAX (29:18, 10ms, 10MHz, QPSK, AMC 2x3, 18 symbols)	WiMAX	14.57	± 9.6 %
10311	AAD	LTE-FDD (SC-FDMA, 100% RB, 15 MHz, QPSK)	LTE-FDD	6.06	± 9.6 %
10313	AAA	iDEN 1:3	iDEN	10.51	± 9.6 %
10314	AAA	iDEN 1:6	iDEN	13.48	± 9.6 %
10315	AAB	IEEE 802.11b WiFi 2.4 GHz (DSSS, 1 Mbps, 96pc duty cycle)	WLAN	1.71	± 9.6 %
10316	AAB	IEEE 802.11g WiFi 2.4 GHz (ERP-OFDM, 6 Mbps, 96pc duty cycle)	WLAN	8.36	± 9.6 %
10317	AAC	IEEE 802.11a WiFi 5 GHz (OFDM, 6 Mbps, 96pc duty cycle)	WLAN	8.36	± 9.6 %
10352	AAA	Pulse Waveform (200Hz, 10%)	Generic	10.00	± 9.6 %
10353	AAA	Pulse Waveform (200Hz, 20%)	Generic	6.99	± 9.6 %
10354	AAA	Pulse Waveform (200Hz, 40%)	Generic	3.98	± 9.6 %
10355	AAA	Pulse Waveform (200Hz, 60%)	Generic	2.22	± 9.6 %
10356	AAA	Pulse Waveform (200Hz, 80%)	Generic	0.97	± 9.6 %
10387	AAA	QPSK Waveform, 1 MHz	Generic	5.10	± 9.6 %
10388	AAA	QPSK Waveform, 10 MHz	Generic	5.22	± 9.6 %
10396	AAA	64-QAM Waveform, 100 kHz	Generic	6.27	± 9.6 %
10399	AAA	64-QAM Waveform, 40 MHz	Generic	6.27	± 9.6 %
10400	AAD	IEEE 802.11ac WiFi (20MHz, 64-QAM, 99pc duty cycle)	WLAN	8.37	± 9.6 %
10401	AAD	IEEE 802.11ac WiFi (40MHz, 64-QAM, 99pc duty cycle)	WLAN	8.60	± 9.6 %
10402	AAD	IEEE 802.11ac WiFi (80MHz, 64-QAM, 99pc duty cycle)	WLAN	8.53	± 9.6 %
10403	AAB	CDMA2000 (1xEV-DO, Rev. 0)	CDMA2000	3.76	± 9.6 %
10404	AAB	CDMA2000 (1xEV-DO, Rev. A)	CDMA2000	3.77	± 9.6 %
10406	AAB	CDMA2000, RC3, SO32, SCH0, Full Rate	CDMA2000	5.22	± 9.6 %
10410	AAF	LTE-TDD (SC-FDMA, 1 RB, 10 MHz, QPSK, UL Subframe=2,3,4,7,8,9, Subframe Conf=4)	LTE-TDD	7.82	± 9.6 %
10414	AAA	WLAN CCDF, 64-QAM, 40MHz	Generic	8.54	± 9.6 %
10415	AAA	IEEE 802.11b WiFi 2.4 GHz (DSSS, 1 Mbps, 99pc duty cycle)	WLAN	1.54	± 9.6 %
10416	AAA	IEEE 802.11g WiFi 2.4 GHz (ERP-OFDM, 6 Mbps, 99pc duty cycle)	WLAN	8.23	± 9.6 %
10417	AAB	IEEE 802.11a/h WiFi 5 GHz (OFDM, 6 Mbps, 99pc duty cycle)	WLAN	8.23	± 9.6 %
10418	AAA	IEEE 802.11g WiFi 2.4 GHz (DSSS-OFDM, 6 Mbps, 99pc duty cycle, Long preambule)	WLAN	8.14	± 9.6 %
10419	AAA	IEEE 802.11g WiFi 2.4 GHz (DSSS-OFDM, 6 Mbps, 99pc duty cycle, Short preambule)	WLAN	8.19	± 9.6 %
10422	AAB	IEEE 802.11n (HT Greenfield, 7.2 Mbps, BPSK)	WLAN	8.32	± 9.6 %
10423	AAB	IEEE 802.11n (HT Greenfield, 43.3 Mbps, 16-QAM)	WLAN	8.47	± 9.6 %
10424	AAB	IEEE 802.11n (HT Greenfield, 72.2 Mbps, 64-QAM)	WLAN	8.40	± 9.6 %
10425	AAB	IEEE 802.11n (HT Greenfield, 15 Mbps, BPSK)	WLAN	8.41	± 9.6 %
10426	AAB	IEEE 802.11n (HT Greenfield, 90 Mbps, 16-QAM)	WLAN	8.45	± 9.6 %
10427	AAB	IEEE 802.11n (HT Greenfield, 150 Mbps, 64-QAM)	WLAN	8.41	± 9.6 %
10430	AAD	LTE-FDD (OFDMA, 5 MHz, E-TM 3.1)	LTE-FDD	8.28	± 9.6 %
10431	AAD	LTE-FDD (OFDMA, 10 MHz, E-TM 3.1)	LTE-FDD	8.38	± 9.6 %
10432	AAC	LTE-FDD (OFDMA, 15 MHz, E-TM 3.1)	LTE-FDD	8.34	± 9.6 %
10433	AAC	LTE-FDD (OFDMA, 20 MHz, E-TM 3.1)	LTE-FDD	8.34	± 9.6 %
10434	AAA	W-CDMA (BS Test Model 1, 64 DPCH)	WCDMA	8.60	± 9.6 %
10435	AAF	LTE-TDD (SC-FDMA, 1 RB, 20 MHz, QPSK, UL Subframe=2,3,4,7,8,9)	LTE-TDD	7.82	± 9.6 %
10447	AAD	LTE-FDD (OFDMA, 5 MHz, E-TM 3.1, Clipping 44%)	LTE-FDD	7.56	± 9.6 %
10448	AAD	LTE-FDD (OFDMA, 10 MHz, E-TM 3.1, Clippin 44%)	LTE-FDD	7.53	± 9.6 %
10449	AAC	LTE-FDD (OFDMA, 15 MHz, E-TM 3.1, Cliping 44%)	LTE-FDD	7.51	± 9.6 %
10450	AAC	LTE-FDD (OFDMA, 20 MHz, E-TM 3.1, Clipping 44%)	LTE-FDD	7.48	± 9.6 %

10451	AAA	W-CDMA (BS Test Model 1, 64 DPCH, Clipping 44%)	WCDMA	7.59	± 9.6 %
10456	AAB	IEEE 802.11ac WiFi (160MHz, 64-QAM, 99pc duty cycle)	WLAN	8.63	± 9.6 %
10457	AAA	UMTS-FDD (DC-HSDPA)	WCDMA	6.62	± 9.6 %
10458	AAA	CDMA2000 (1xEV-DO, Rev. B, 2 carriers)	CDMA2000	6.55	± 9.6 %
10459	AAA	CDMA2000 (1xEV-DO, Rev. B, 3 carriers)	CDMA2000	8.25	± 9.6 %
10460	AAA	UMTS-FDD (WCDMA, AMR)	WCDMA	2.39	± 9.6 %
10461	AAA	LTE-TDD (SC-FDMA, 1 RB, 1.4 MHz, QPSK, UL Subframe=2,3,4,7,8,9)	LTE-TDD	7.82	± 9.6 %
10462	AAA	LTE-TDD (SC-FDMA, 1 RB, 1.4 MHz, 16-QAM, UL Subframe=2,3,4,7,8,9)	LTE-TDD	8.30	± 9.6 %
10463	AAA	LTE-TDD (SC-FDMA, 1 RB, 1.4 MHz, 64-QAM, UL Subframe=2,3,4,7,8,9)	LTE-TDD	8.56	± 9.6 %
10464	AAB	LTE-TDD (SC-FDMA, 1 RB, 3 MHz, QPSK, UL Subframe=2,3,4,7,8,9)	LTE-TDD	7.82	± 9.6 %
10465	AAB	LTE-TDD (SC-FDMA, 1 RB, 3 MHz, 16-QAM, UL Subframe=2,3,4,7,8,9)	LTE-TDD	8.32	± 9.6 %
10466	AAB	LTE-TDD (SC-FDMA, 1 RB, 3 MHz, 64-QAM, UL Subframe=2,3,4,7,8,9)	LTE-TDD	8.57	± 9.6 %
10467	AAE	LTE-TDD (SC-FDMA, 1 RB, 5 MHz, QPSK, UL Subframe=2,3,4,7,8,9)	LTE-TDD	7.82	± 9.6 %
10468	AAE	LTE-TDD (SC-FDMA, 1 RB, 5 MHz, 16-QAM, UL Subframe=2,3,4,7,8,9)	LTE-TDD	8.32	± 9.6 %
10469	AAE	LTE-TDD (SC-FDMA, 1 RB, 5 MHz, 64-QAM, UL Subframe=2,3,4,7,8,9)	LTE-TDD	8.56	± 9.6 %
10470	AAE	LTE-TDD (SC-FDMA, 1 RB, 10 MHz, QPSK, UL Subframe=2,3,4,7,8,9)	LTE-TDD	7.82	± 9.6 %
10471	AAE	LTE-TDD (SC-FDMA, 1 RB, 10 MHz, 16-QAM, UL Subframe=2,3,4,7,8,9)	LTE-TDD	8.32	± 9.6 %
10472	AAE	LTE-TDD (SC-FDMA, 1 RB, 10 MHz, 64-QAM, UL Subframe=2,3,4,7,8,9)	LTE-TDD	8.57	± 9.6 %
10473	AAE	LTE-TDD (SC-FDMA, 1 RB, 15 MHz, QPSK, UL Subframe=2,3,4,7,8,9)	LTE-TDD	7.82	± 9.6 %
10474	AAE	LTE-TDD (SC-FDMA, 1 RB, 15 MHz, 16-QAM, UL Subframe=2,3,4,7,8,9)	LTE-TDD	8.32	± 9.6 %
10475	AAE	LTE-TDD (SC-FDMA, 1 RB, 15 MHz, 64-QAM, UL Subframe=2,3,4,7,8,9)	LTE-TDD	8.57	± 9.6 %
10477	AAF	LTE-TDD (SC-FDMA, 1 RB, 20 MHz, 16-QAM, UL Subframe=2,3,4,7,8,9)	LTE-TDD	8.32	± 9.6 %
10478	AAF	LTE-TDD (SC-FDMA, 1 RB, 20 MHz, 64-QAM, UL Subframe=2,3,4,7,8,9)	LTE-TDD	8.57	± 9.6 %
10479	AAA	LTE-TDD (SC-FDMA, 50% RB, 1.4 MHz, QPSK, UL Subframe=2,3,4,7,8,9)	LTE-TDD	7.74	± 9.6 %
10480	AAA	LTE-TDD (SC-FDMA, 50% RB, 1.4 MHz, 16-QAM, UL Subframe=2,3,4,7,8,9)	LTE-TDD	8.18	± 9.6 %
10481	AAA	LTE-TDD (SC-FDMA, 50% RB, 1.4 MHz, 64-QAM, UL Subframe=2,3,4,7,8,9)	LTE-TDD	8.45	± 9.6 %
10482	AAB	LTE-TDD (SC-FDMA, 50% RB, 3 MHz, QPSK, UL Subframe=2,3,4,7,8,9)	LTE-TDD	7.71	± 9.6 %
10483	AAB	LTE-TDD (SC-FDMA, 50% RB, 3 MHz, 16-QAM, UL Subframe=2,3,4,7,8,9)	LTE-TDD	8.39	± 9.6 %
10484	AAB	LTE-TDD (SC-FDMA, 50% RB, 3 MHz, 64-QAM, UL Subframe=2,3,4,7,8,9)	LTE-TDD	8.47	± 9.6 %
10485	AAE	LTE-TDD (SC-FDMA, 50% RB, 5 MHz, QPSK, UL Subframe=2,3,4,7,8,9)	LTE-TDD	7.59	± 9.6 %
10486	AAE	LTE-TDD (SC-FDMA, 50% RB, 5 MHz, 16-QAM, UL Subframe=2,3,4,7,8,9)	LTE-TDD	8.38	± 9.6 %
10487	AAE	LTE-TDD (SC-FDMA, 50% RB, 5 MHz, 64-QAM, UL Subframe=2,3,4,7,8,9)	LTE-TDD	8.60	± 9.6 %
10488	AAE	LTE-TDD (SC-FDMA, 50% RB, 10 MHz, QPSK, UL Subframe=2,3,4,7,8,9)	LTE-TDD	7.70	± 9.6 %
10489	AAE	LTE-TDD (SC-FDMA, 50% RB, 10 MHz, 16-QAM, UL Subframe=2,3,4,7,8,9)	LTE-TDD	8.31	± 9.6 %
10490	AAE	LTE-TDD (SC-FDMA, 50% RB, 10 MHz, 64-QAM, UL Subframe=2,3,4,7,8,9)	LTE-TDD	8.54	± 9.6 %
10491	AAE	LTE-TDD (SC-FDMA, 50% RB, 15 MHz, QPSK, UL Subframe=2,3,4,7,8,9)	LTE-TDD	7.74	± 9.6 %

10492	AAE	LTE-TDD (SC-FDMA, 50% RB, 15 MHz, 16-QAM, UL Subframe=2,3,4,7,8,9)	LTE-TDD	8.41	± 9.6 %
10493	AAE	LTE-TDD (SC-FDMA, 50% RB, 15 MHz, 64-QAM, UL Subframe=2,3,4,7,8,9)	LTE-TDD	8.55	± 9.6 %
10494	AAF	LTE-TDD (SC-FDMA, 50% RB, 20 MHz, QPSK, UL Subframe=2,3,4,7,8,9)	LTE-TDD	7.74	± 9.6 %
10495	AAF	LTE-TDD (SC-FDMA, 50% RB, 20 MHz, 16-QAM, UL Subframe=2,3,4,7,8,9)	LTE-TDD	8.37	± 9.6 %
10496	AAF	LTE-TDD (SC-FDMA, 50% RB, 20 MHz, 64-QAM, UL Subframe=2,3,4,7,8,9)	LTE-TDD	8.54	± 9.6 %
10497	AAA	LTE-TDD (SC-FDMA, 100% RB, 1.4 MHz, QPSK, UL Subframe=2,3,4,7,8,9)	LTE-TDD	7.67	± 9.6 %
10498	AAA	LTE-TDD (SC-FDMA, 100% RB, 1.4 MHz, 16-QAM, UL Subframe=2,3,4,7,8,9)	LTE-TDD	8.40	± 9.6 %
10499	AAA	LTE-TDD (SC-FDMA, 100% RB, 1.4 MHz, 64-QAM, UL Subframe=2,3,4,7,8,9)	LTE-TDD	8.68	± 9.6 %
10500	AAB	LTE-TDD (SC-FDMA, 100% RB, 3 MHz, QPSK, UL Subframe=2,3,4,7,8,9)	LTE-TDD	7.67	± 9.6 %
10501	AAB	LTE-TDD (SC-FDMA, 100% RB, 3 MHz, 16-QAM, UL Subframe=2,3,4,7,8,9)	LTE-TDD	8.44	± 9.6 %
10502	AAB	LTE-TDD (SC-FDMA, 100% RB, 3 MHz, 64-QAM, UL Subframe=2,3,4,7,8,9)	LTE-TDD	8.52	± 9.6 %
10503	AAE	LTE-TDD (SC-FDMA, 100% RB, 5 MHz, QPSK, UL Subframe=2,3,4,7,8,9)	LTE-TDD	7.72	± 9.6 %
10504	AAE	LTE-TDD (SC-FDMA, 100% RB, 5 MHz, 16-QAM, UL Subframe=2,3,4,7,8,9)	LTE-TDD	8.31	± 9.6 %
10505	AAE	LTE-TDD (SC-FDMA, 100% RB, 5 MHz, 64-QAM, UL Subframe=2,3,4,7,8,9)	LTE-TDD	8.54	± 9.6 %
10506	AAE	LTE-TDD (SC-FDMA, 100% RB, 10 MHz, QPSK, UL Subframe=2,3,4,7,8,9)	LTE-TDD	7.74	± 9.6 %
10507	AAE	LTE-TDD (SC-FDMA, 100% RB, 10 MHz, 16-QAM, UL Subframe=2,3,4,7,8,9)	LTE-TDD	8.36	± 9.6 %
10508	AAE	LTE-TDD (SC-FDMA, 100% RB, 10 MHz, 64-QAM, UL Subframe=2,3,4,7,8,9)	LTE-TDD	8.55	± 9.6 %
10509	AAE	LTE-TDD (SC-FDMA, 100% RB, 15 MHz, QPSK, UL Subframe=2,3,4,7,8,9)	LTE-TDD	7.99	± 9.6 %
10510	AAE	LTE-TDD (SC-FDMA, 100% RB, 15 MHz, 16-QAM, UL Subframe=2,3,4,7,8,9)	LTE-TDD	8.49	± 9.6 %
10511	AAE	LTE-TDD (SC-FDMA, 100% RB, 15 MHz, 64-QAM, UL Subframe=2,3,4,7,8,9)	LTE-TDD	8.51	± 9.6 %
10512	AAF	LTE-TDD (SC-FDMA, 100% RB, 20 MHz, QPSK, UL Subframe=2,3,4,7,8,9)	LTE-TDD	7.74	± 9.6 %
10513	AAF	LTE-TDD (SC-FDMA, 100% RB, 20 MHz, 16-QAM, UL Subframe=2,3,4,7,8,9)	LTE-TDD	8.42	± 9.6 %
10514	AAF	LTE-TDD (SC-FDMA, 100% RB, 20 MHz, 64-QAM, UL Subframe=2,3,4,7,8,9)	LTE-TDD	8.45	± 9.6 %
10515	AAA	IEEE 802.11b WiFi 2.4 GHz (DSSS, 2 Mbps, 99pc duty cycle)	WLAN	1.58	± 9.6 %
10516	AAA	IEEE 802.11b WiFi 2.4 GHz (DSSS, 5.5 Mbps, 99pc duty cycle)	WLAN	1.57	± 9.6 %
10517	AAA	IEEE 802.11b WiFi 2.4 GHz (DSSS, 11 Mbps, 99pc duty cycle)	WLAN	1.58	± 9.6 %
10518	AAB	IEEE 802.11a/h WiFi 5 GHz (OFDM, 9 Mbps, 99pc duty cycle)	WLAN	8.23	± 9.6 %
10519	AAB	IEEE 802.11a/h WiFi 5 GHz (OFDM, 12 Mbps, 99pc duty cycle)	WLAN	8.39	± 9.6 %
10520	AAB	IEEE 802.11a/h WiFi 5 GHz (OFDM, 18 Mbps, 99pc duty cycle)	WLAN	8.12	± 9.6 %
10521	AAB	IEEE 802.11a/h WiFi 5 GHz (OFDM, 24 Mbps, 99pc duty cycle)	WLAN	7.97	± 9.6 %
10522	AAB	IEEE 802.11a/h WiFi 5 GHz (OFDM, 36 Mbps, 99pc duty cycle)	WLAN	8.45	± 9.6 %
10523	AAB	IEEE 802.11a/h WiFi 5 GHz (OFDM, 48 Mbps, 99pc duty cycle)	WLAN	8.08	± 9.6 %
10524	AAB	IEEE 802.11a/h WiFi 5 GHz (OFDM, 54 Mbps, 99pc duty cycle)	WLAN	8.27	± 9.6 %
10525	AAB	IEEE 802.11ac WiFi (20MHz, MCS0, 99pc duty cycle)	WLAN	8.36	± 9.6 %
10526	AAB	IEEE 802.11ac WiFi (20MHz, MCS1, 99pc duty cycle)	WLAN	8.42	± 9.6 %
10527	AAB	IEEE 802.11ac WiFi (20MHz, MCS2, 99pc duty cycle)	WLAN	8.21	± 9.6 %
10528	AAB	IEEE 802.11ac WiFi (20MHz, MCS3, 99pc duty cycle)	WLAN	8.36	± 9.6 %
10529	AAB	IEEE 802.11ac WiFi (20MHz, MCS4, 99pc duty cycle)	WLAN	8.36	± 9.6 %
10531	AAB	IEEE 802.11ac WiFi (20MHz, MCS6, 99pc duty cycle)	WLAN	8.43	± 9.6 %
10532	AAB	IEEE 802.11ac WiFi (20MHz, MCS7, 99pc duty cycle)	WLAN	8.29	± 9.6 %
10533	AAB	IEEE 802.11ac WiFi (20MHz, MCS8, 99pc duty cycle)	WLAN	8.38	± 9.6 %
10534	AAB	IEEE 802.11ac WiFi (40MHz, MCS0, 99pc duty cycle)	WLAN	8.45	± 9.6 %

10535	AAB	IEEE 802.11ac WiFi (40MHz, MCS1, 99pc duty cycle)	WLAN	8.45	± 9.6 %
10536	AAB	IEEE 802.11ac WiFi (40MHz, MCS2, 99pc duty cycle)	WLAN	8.32	± 9.6 %
10537	AAB	IEEE 802.11ac WiFi (40MHz, MCS3, 99pc duty cycle)	WLAN	8.44	± 9.6 %
10538	AAB	IEEE 802.11ac WiFi (40MHz, MCS4, 99pc duty cycle)	WLAN	8.54	± 9.6 %
10540	AAB	IEEE 802.11ac WiFi (40MHz, MCS6, 99pc duty cycle)	WLAN	8.39	± 9.6 %
10541	AAB	IEEE 802.11ac WiFi (40MHz, MCS7, 99pc duty cycle)	WLAN	8.46	± 9.6 %
10542	AAB	IEEE 802.11ac WiFi (40MHz, MCS8, 99pc duty cycle)	WLAN	8.65	± 9.6 %
10543	AAB	IEEE 802.11ac WiFi (40MHz, MCS9, 99pc duty cycle)	WLAN	8.65	± 9.6 %
10544	AAB	IEEE 802.11ac WiFi (80MHz, MCS0, 99pc duty cycle)	WLAN	8.47	± 9.6 %
10545	AAB	IEEE 802.11ac WiFi (80MHz, MCS1, 99pc duty cycle)	WLAN	8.55	± 9.6 %
10546	AAB	IEEE 802.11ac WiFi (80MHz, MCS2, 99pc duty cycle)	WLAN	8.35	± 9.6 %
10547	AAB	IEEE 802.11ac WiFi (80MHz, MCS3, 99pc duty cycle)	WLAN	8.49	± 9.6 %
10548	AAB	IEEE 802.11ac WiFi (80MHz, MCS4, 99pc duty cycle)	WLAN	8.37	± 9.6 %
10550	AAB	IEEE 802.11ac WiFi (80MHz, MCS6, 99pc duty cycle)	WLAN	8.38	± 9.6 %
10551	AAB	IEEE 802.11ac WiFi (80MHz, MCS7, 99pc duty cycle)	WLAN	8.50	± 9.6 %
10552	AAB	IEEE 802.11ac WiFi (80MHz, MCS8, 99pc duty cycle)	WLAN	8.42	± 9.6 %
10553	AAB	IEEE 802.11ac WiFi (80MHz, MCS9, 99pc duty cycle)	WLAN	8.45	± 9.6 %
10554	AAC	IEEE 802.11ac WiFi (160MHz, MCS0, 99pc duty cycle)	WLAN	8.48	± 9.6 %
10555	AAC	IEEE 802.11ac WiFi (160MHz, MCS1, 99pc duty cycle)	WLAN	8.47	± 9.6 %
10556	AAC	IEEE 802.11ac WiFi (160MHz, MCS2, 99pc duty cycle)	WLAN	8.50	± 9.6 %
10557	AAC	IEEE 802.11ac WiFi (160MHz, MCS3, 99pc duty cycle)	WLAN	8.52	± 9.6 %
10558	AAC	IEEE 802.11ac WiFi (160MHz, MCS4, 99pc duty cycle)	WLAN	8.61	± 9.6 %
10560	AAC	IEEE 802.11ac WiFi (160MHz, MCS6, 99pc duty cycle)	WLAN	8.73	± 9.6 %
10561	AAC	IEEE 802.11ac WiFi (160MHz, MCS7, 99pc duty cycle)	WLAN	8.56	± 9.6 %
10562	AAC	IEEE 802.11ac WiFi (160MHz, MCS8, 99pc duty cycle)	WLAN	8.69	± 9.6 %
10563	AAC	IEEE 802.11ac WiFi (160MHz, MCS9, 99pc duty cycle)	WLAN	8.77	± 9.6 %
10564	AAA	IEEE 802.11g WiFi 2.4 GHz (DSSS-OFDM, 9 Mbps, 99pc duty cycle)	WLAN	8.25	± 9.6 %
10565	AAA	IEEE 802.11g WiFi 2.4 GHz (DSSS-OFDM, 12 Mbps, 99pc duty cycle)	WLAN	8.45	± 9.6 %
10566	AAA	IEEE 802.11g WiFi 2.4 GHz (DSSS-OFDM, 18 Mbps, 99pc duty cycle)	WLAN	8.13	± 9.6 %
10567	AAA	IEEE 802.11g WiFi 2.4 GHz (DSSS-OFDM, 24 Mbps, 99pc duty cycle)	WLAN	8.00	± 9.6 %
10568	AAA	IEEE 802.11g WiFi 2.4 GHz (DSSS-OFDM, 36 Mbps, 99pc duty cycle)	WLAN	8.37	± 9.6 %
10569	AAA	IEEE 802.11g WiFi 2.4 GHz (DSSS-OFDM, 48 Mbps, 99pc duty cycle)	WLAN	8.10	± 9.6 %
10570	AAA	IEEE 802.11g WiFi 2.4 GHz (DSSS-OFDM, 54 Mbps, 99pc duty cycle)	WLAN	8.30	± 9.6 %
10571	AAA	IEEE 802.11b WiFi 2.4 GHz (DSSS, 1 Mbps, 90pc duty cycle)	WLAN	1.99	± 9.6 %
10572	AAA	IEEE 802.11b WiFi 2.4 GHz (DSSS, 2 Mbps, 90pc duty cycle)	WLAN	1.99	± 9.6 %
10573	AAA	IEEE 802.11b WiFi 2.4 GHz (DSSS, 5.5 Mbps, 90pc duty cycle)	WLAN	1.98	± 9.6 %
10574	AAA	IEEE 802.11b WiFi 2.4 GHz (DSSS, 11 Mbps, 90pc duty cycle)	WLAN	1.98	± 9.6 %
10575	AAA	IEEE 802.11g WiFi 2.4 GHz (DSSS-OFDM, 6 Mbps, 90pc duty cycle)	WLAN	8.59	± 9.6 %
10576	AAA	IEEE 802.11g WiFi 2.4 GHz (DSSS-OFDM, 9 Mbps, 90pc duty cycle)	WLAN	8.60	± 9.6 %
10577	AAA	IEEE 802.11g WiFi 2.4 GHz (DSSS-OFDM, 12 Mbps, 90pc duty cycle)	WLAN	8.70	± 9.6 %
10578	AAA	IEEE 802.11g WiFi 2.4 GHz (DSSS-OFDM, 18 Mbps, 90pc duty cycle)	WLAN	8.49	± 9.6 %
10579	AAA	IEEE 802.11g WiFi 2.4 GHz (DSSS-OFDM, 24 Mbps, 90pc duty cycle)	WLAN	8.36	± 9.6 %
10580	AAA	IEEE 802.11g WiFi 2.4 GHz (DSSS-OFDM, 36 Mbps, 90pc duty cycle)	WLAN	8.76	± 9.6 %
10581	AAA	IEEE 802.11g WiFi 2.4 GHz (DSSS-OFDM, 48 Mbps, 90pc duty cycle)	WLAN	8.35	± 9.6 %
10582	AAA	IEEE 802.11g WiFi 2.4 GHz (DSSS-OFDM, 54 Mbps, 90pc duty cycle)	WLAN	8.67	± 9.6 %
10583	AAB	IEEE 802.11a/h WiFi 5 GHz (OFDM, 6 Mbps, 90pc duty cycle)	WLAN	8.59	± 9.6 %
10584	AAB	IEEE 802.11a/h WiFi 5 GHz (OFDM, 9 Mbps, 90pc duty cycle)	WLAN	8.60	± 9.6 %
10585	AAB	IEEE 802.11a/h WiFi 5 GHz (OFDM, 12 Mbps, 90pc duty cycle)	WLAN	8.70	± 9.6 %
10586	AAB	IEEE 802.11a/h WiFi 5 GHz (OFDM, 18 Mbps, 90pc duty cycle)	WLAN	8.49	± 9.6 %
10587	AAB	IEEE 802.11a/h WiFi 5 GHz (OFDM, 24 Mbps, 90pc duty cycle)	WLAN	8.36	± 9.6 %

10588	AAB	IEEE 802.11a/h WiFi 5 GHz (OFDM, 36 Mbps, 90pc duty cycle)	WLAN	8.76	± 9.6 %
10589	AAB	IEEE 802.11a/h WiFi 5 GHz (OFDM, 48 Mbps, 90pc duty cycle)	WLAN	8.35	± 9.6 %
10590	AAB	IEEE 802.11a/h WiFi 5 GHz (OFDM, 54 Mbps, 90pc duty cycle)	WLAN	8.67	± 9.6 %
10591	AAB	IEEE 802.11n (HT Mixed, 20MHz, MCS0, 90pc duty cycle)	WLAN	8.63	± 9.6 %
10592	AAB	IEEE 802.11n (HT Mixed, 20MHz, MCS1, 90pc duty cycle)	WLAN	8.79	± 9.6 %
10593	AAB	IEEE 802.11n (HT Mixed, 20MHz, MCS2, 90pc duty cycle)	WLAN	8.64	± 9.6 %
10594	AAB	IEEE 802.11n (HT Mixed, 20MHz, MCS3, 90pc duty cycle)	WLAN	8.74	± 9.6 %
10595	AAB	IEEE 802.11n (HT Mixed, 20MHz, MCS4, 90pc duty cycle)	WLAN	8.74	± 9.6 %
10596	AAB	IEEE 802.11n (HT Mixed, 20MHz, MCS5, 90pc duty cycle)	WLAN	8.71	± 9.6 %
10597	AAB	IEEE 802.11n (HT Mixed, 20MHz, MCS6, 90pc duty cycle)	WLAN	8.72	± 9.6 %
10598	AAB	IEEE 802.11n (HT Mixed, 20MHz, MCS7, 90pc duty cycle)	WLAN	8.50	± 9.6 %
10599	AAB	IEEE 802.11n (HT Mixed, 40MHz, MCS0, 90pc duty cycle)	WLAN	8.79	± 9.6 %
10600	AAB	IEEE 802.11n (HT Mixed, 40MHz, MCS1, 90pc duty cycle)	WLAN	8.88	± 9.6 %
10601	AAB	IEEE 802.11n (HT Mixed, 40MHz, MCS2, 90pc duty cycle)	WLAN	8.82	± 9.6 %
10602	AAB	IEEE 802.11n (HT Mixed, 40MHz, MCS3, 90pc duty cycle)	WLAN	8.94	± 9.6 %
10603	AAB	IEEE 802.11n (HT Mixed, 40MHz, MCS4, 90pc duty cycle)	WLAN	9.03	± 9.6 %
10604	AAB	IEEE 802.11n (HT Mixed, 40MHz, MCS5, 90pc duty cycle)	WLAN	8.76	± 9.6 %
10605	AAB	IEEE 802.11n (HT Mixed, 40MHz, MCS6, 90pc duty cycle)	WLAN	8.97	± 9.6 %
10606	AAB	IEEE 802.11n (HT Mixed, 40MHz, MCS7, 90pc duty cycle)	WLAN	8.82	± 9.6 %
10607	AAB	IEEE 802.11ac WiFi (20MHz, MCS0, 90pc duty cycle)	WLAN	8.64	± 9.6 %
10608	AAB	IEEE 802.11ac WiFi (20MHz, MCS1, 90pc duty cycle)	WLAN	8.77	± 9.6 %
10609	AAB	IEEE 802.11ac WiFi (20MHz, MCS2, 90pc duty cycle)	WLAN	8.57	± 9.6 %
10610	AAB	IEEE 802.11ac WiFi (20MHz, MCS3, 90pc duty cycle)	WLAN	8.78	± 9.6 %
10611	AAB	IEEE 802.11ac WiFi (20MHz, MCS4, 90pc duty cycle)	WLAN	8.70	± 9.6 %
10612	AAB	IEEE 802.11ac WiFi (20MHz, MCS5, 90pc duty cycle)	WLAN	8.77	± 9.6 %
10613	AAB	IEEE 802.11ac WiFi (20MHz, MCS6, 90pc duty cycle)	WLAN	8.94	± 9.6 %
10614	AAB	IEEE 802.11ac WiFi (20MHz, MCS7, 90pc duty cycle)	WLAN	8.59	± 9.6 %
10615	AAB	IEEE 802.11ac WiFi (20MHz, MCS8, 90pc duty cycle)	WLAN	8.82	± 9.6 %
10616	AAB	IEEE 802.11ac WiFi (40MHz, MCS0, 90pc duty cycle)	WLAN	8.82	± 9.6 %
10617	AAB	IEEE 802.11ac WiFi (40MHz, MCS1, 90pc duty cycle)	WLAN	8.81	± 9.6 %
10618	AAB	IEEE 802.11ac WiFi (40MHz, MCS2, 90pc duty cycle)	WLAN	8.58	± 9.6 %
10619	AAB	IEEE 802.11ac WiFi (40MHz, MCS3, 90pc duty cycle)	WLAN	8.86	± 9.6 %
10620	AAB	IEEE 802.11ac WiFi (40MHz, MCS4, 90pc duty cycle)	WLAN	8.87	± 9.6 %
10621	AAB	IEEE 802.11ac WiFi (40MHz, MCS5, 90pc duty cycle)	WLAN	8.77	± 9.6 %
10622	AAB	IEEE 802.11ac WiFi (40MHz, MCS6, 90pc duty cycle)	WLAN	8.68	± 9.6 %
10623	AAB	IEEE 802.11ac WiFi (40MHz, MCS7, 90pc duty cycle)	WLAN	8.82	± 9.6 %
10624	AAB	IEEE 802.11ac WiFi (40MHz, MCS8, 90pc duty cycle)	WLAN	8.96	± 9.6 %
10625	AAB	IEEE 802.11ac WiFi (40MHz, MCS9, 90pc duty cycle)	WLAN	8.96	± 9.6 %
10626	AAB	IEEE 802.11ac WiFi (80MHz, MCS0, 90pc duty cycle)	WLAN	8.83	± 9.6 %
10627	AAB	IEEE 802.11ac WiFi (80MHz, MCS1, 90pc duty cycle)	WLAN	8.88	± 9.6 %
10628	AAB	IEEE 802.11ac WiFi (80MHz, MCS2, 90pc duty cycle)	WLAN	8.71	± 9.6 %
10629	AAB	IEEE 802.11ac WiFi (80MHz, MCS3, 90pc duty cycle)	WLAN	8.85	± 9.6 %
10630	AAB	IEEE 802.11ac WiFi (80MHz, MCS4, 90pc duty cycle)	WLAN	8.72	± 9.6 %
10631	AAB	IEEE 802.11ac WiFi (80MHz, MCS5, 90pc duty cycle)	WLAN	8.81	± 9.6 %
10632	AAB	IEEE 802.11ac WiFi (80MHz, MCS6, 90pc duty cycle)	WLAN	8.74	± 9.6 %
10633	AAB	IEEE 802.11ac WiFi (80MHz, MCS7, 90pc duty cycle)	WLAN	8.83	± 9.6 %
10634	AAB	IEEE 802.11ac WiFi (80MHz, MCS8, 90pc duty cycle)	WLAN	8.80	± 9.6 %
10635	AAB	IEEE 802.11ac WiFi (80MHz, MCS9, 90pc duty cycle)	WLAN	8.81	± 9.6 %
10636	AAC	IEEE 802.11ac WiFi (160MHz, MCS0, 90pc duty cycle)	WLAN	8.83	± 9.6 %
10637	AAC	IEEE 802.11ac WiFi (160MHz, MCS1, 90pc duty cycle)	WLAN	8.79	± 9.6 %
10638	AAC	IEEE 802.11ac WiFi (160MHz, MCS2, 90pc duty cycle)	WLAN	8.86	± 9.6 %
10639	AAC	IEEE 802.11ac WiFi (160MHz, MCS3, 90pc duty cycle)	WLAN	8.85	± 9.6 %
10640	AAC	IEEE 802.11ac WiFi (160MHz, MCS4, 90pc duty cycle)	WLAN	8.98	± 9.6 %
10641	AAC	IEEE 802.11ac WiFi (160MHz, MCS5, 90pc duty cycle)	WLAN	9.06	± 9.6 %
10642	AAC	IEEE 802.11ac WiFi (160MHz, MCS6, 90pc duty cycle)	WLAN	9.06	± 9.6 %
10643	AAC	IEEE 802.11ac WiFi (160MHz, MCS7, 90pc duty cycle)	WLAN	8.89	± 9.6 %
10644	AAC	IEEE 802.11ac WiFi (160MHz, MCS8, 90pc duty cycle)	WLAN	9.05	± 9.6 %
10645	AAC	IEEE 802.11ac WiFi (160MHz, MCS9, 90pc duty cycle)	WLAN	9.11	± 9.6 %
10646	AAF	LTE-TDD (SC-FDMA, 1 RB, 5 MHz, QPSK, UL Subframe=2,7)	LTE-TDD	11.96	± 9.6 %
10647	AAF	LTE-TDD (SC-FDMA, 1 RB, 20 MHz, QPSK, UL Subframe=2,7)	LTE-TDD	11.96	± 9.6 %
10648	AAA	CDMA2000 (1x Advanced)	CDMA2000	3.45	± 9.6 %
10652	AAD	LTE-TDD (OFDMA, 5 MHz, E-TM 3.1, Clipping 44%)	LTE-TDD	6.91	± 9.6 %
10653	AAD	LTE-TDD (OFDMA, 10 MHz, E-TM 3.1, Clipping 44%)	LTE-TDD	7.42	± 9.6 %
10654	AAD	LTE-TDD (OFDMA, 15 MHz, E-TM 3.1, Clipping 44%)	LTE-TDD	6.96	± 9.6 %

10655	AAE	LTE-TDD (OFDMA, 20 MHz, E-TM 3.1, Clipping 44%)	LTE-TDD	7.21	± 9.6 %
10658	AAA	Pulse Waveform (200Hz, 10%)	Test	10.00	± 9.6 %
10659	AAA	Pulse Waveform (200Hz, 20%)	Test	6.99	± 9.6 %
10660	AAA	Pulse Waveform (200Hz, 40%)	Test	3.98	± 9.6 %
10661	AAA	Pulse Waveform (200Hz, 60%)	Test	2.22	± 9.6 %
10662	AAA	Pulse Waveform (200Hz, 80%)	Test	0.97	± 9.6 %
10670	AAA	Bluetooth Low Energy	Bluetooth	2.19	± 9.6 %

[E] Uncertainty is determined using the max. deviation from linear response applying rectangular distribution and is expressed for the square of the field value.

Calibration Laboratory of
Schmid & Partner
Engineering AG
Zeughausstrasse 43, 8004 Zurich, Switzerland

S Schweizerischer Kalibrierdienst
C Service suisse d'étalonnage
Servizio svizzero di taratura
S Swiss Calibration Service

Accredited by the Swiss Accreditation Service (SAS)
The Swiss Accreditation Service is one of the signatories to the EA Multilateral Agreement for the recognition of calibration certificates

Accreditation No.: SCS 0108

Client **PC Test**

Certificate No: 5G-Veri30-1035_Jan19

CALIBRATION CERTIFICATE

Object	5G Verification Source 30 GHz - SN: 1035
Calibration procedure(s)	QA CAL-45.v2 Calibration procedure for sources in air above 6 GHz
Calibration date:	January 28, 2019

✓ KOK 2/5/19

This calibration certificate documents the traceability to national standards, which realize the physical units of measurements (SI).
The measurements and the uncertainties with confidence probability are given on the following pages and are part of the certificate.

All calibrations have been conducted in the closed laboratory facility: environment temperature (22 ± 3)°C and humidity < 70%.

Calibration Equipment used (M&TE critical for calibration)

Primary Standards	ID #	Cal Date (Certificate No.)	Scheduled Calibration
Reference Probe EUmmWV3	SN: 9374	31-Dec-18 (No. EUmmWV3-9374_Dec18)	Dec-19
DAE4	SN: 1215	26-Feb-18 (No. DAE4-1215_Feb18)	Feb-19

Secondary Standards	ID #	Check Date (in house)	Scheduled Check

	Name	Function	Signature
Calibrated by:	Leif Klysner	Laboratory Technician	
Approved by:	Katja Pokovic	Technical Manager	

Issued: January 29, 2019

This calibration certificate shall not be reproduced except in full without written approval of the laboratory.

Glossary

CW	Continuous wave

Calibration is Performed According to the Following Standards

- Internal procedure QA CAL-45-5Gsources
- IEC TR 63170 ED1, "Measurement procedure for the evaluation of power density related to human exposure to radio frequency fields from wireless communication devices operating between 6 GHz and 100 GHz", January 2018

Methods Applied and Interpretation of Parameters

- *Coordinate System:* z-axis in the waveguide horn boresight, x-axis is in the direction of the E-field, y-axis normal to the others in the field scanning plane parallel to the horn flare and horn flange.
- *Measurement Conditions: (1) 10 GHz:* The forward power to the horn antenna is measured prior and after the measurement with a power sensor. During the measurements, the horn is directly connected to the cable taking into account the 0.4dB horn loss. (2) 30, 60 and 90 GHz: The verification sources are switched on for at least 30 minutes. Absorbers are used around the probe cub and at the ceiling to minimize reflections.
- *Horn Positioning:* The waveguide horn is mounted vertically on the flange of the waveguide source to allow vertical positioning of the EUmmW probe during the scan. The plane is parallel to the phantom surface. Probe distance is verified using mechanical gauges positioned on the flare of the horn.
- *E- field distribution:* E field is measured in two x-y-plane (10mm, 10mm + $\lambda/4$) with a vectorial E-field probe. The E-field value stated as calibration value represents the E-field-maxima and the averaged (1cm^2 and 4cm^2) power density values at 10mm in front of the horn.
- *Field polarization:* Above the open horn, linear polarization of the field is expected. This is verified graphically in the field representation.

Calibrated Quantity

- Local peak E-field (V/m) and peak values of the total and normal component of the poynting vector |Re{S}| and n.Re{S} averaged over the surface area of 1 cm^2 ($pS_{tot}avg1cm^2$ and $pS_n avg1cm^2$) and 4cm^2 ($pS_{tot}avg4cm^2$ and $pS_n avg4cm^2$) at the nominal operational frequency of the verification source.

The reported uncertainty of measurement is stated as the standard uncertainty of measurement multiplied by the coverage factor k=2, which for a normal distribution corresponds to a coverage probability of approximately 95%.

Measurement Conditions

DASY system configuration, as far as not given on page 1.

DASY Version	cDASY6 Module mmWave	V1.4
Phantom	5G Phantom	
Distance Horn Aperture - plane	10 mm	
XY Scan Resolution	dx, dy = 2.5 mm	
Number of measured planes	2 (10mm, 10mm + λ/4)	
Frequency	30 GHz ± 10 MHz	

Calibration Parameters, 30 GHz

Distance Horn Aperture to Measured Plane	***Prad1 (mW)***	**Max E-field (V/m)**	Uncertainty (k = 2)	Avg Power Density n.Re{S}, |Re{S}| (W/m2)		Uncertainty (k = 2)
				1 cm^2	**4** cm^2	
10 mm	31.8	**131**	1.27 dB	**39.0, 39.4**	**34.8, 35.1**	1.28 dB

[I] derived from far-field data

DASY Report

Measurement Report for 5G Verification Source 30 GHz, UID 0 -, Channel 30000 (30000.0MHz)

Device under Test Properties

Name, Manufacturer	Dimensions [mm]	IMEI	DUT Type
5G Verification Source 30 GHz	100.0 x 100.0 x 100.0	SN: 1035	-

Exposure Conditions

Phantom Section	Position, Test Distance [mm]	Band	Group,	Frequency [MHz], Channel Number	Conversion Factor
5G -	5.55 mm	Validation band	CW	30000.0, 30000	1.0

Hardware Setup

Phantom	Medium	Probe, Calibration Date	DAE, Calibration Date
5G Phantom	Air	EUmmWV3 - SN9374, 2018-12-31	DAE4 Sn1215, 2018-02-26

Scan Setup

	5G Scan
Grid Extents [mm]	60.0 x 60.0
Grid Steps [lambda]	0.25 x 0.25
Sensor Surface [mm]	5.55
MAIA	MAIA not used

Measurement Results

	5G Scan
Date	2019-01-28, 16:37
Avg. Area [cm²]	1.00
pS_{tot} avg [W/m²]	39.0
pS_n avg [W/m²]	39.4
E_{peak} [V/m]	131
Power Drift [dB]	0.05

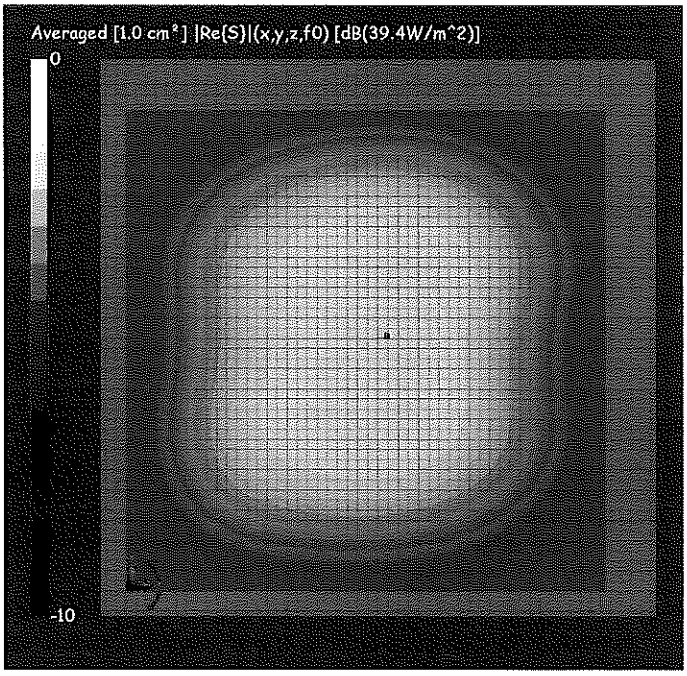

Calibration Laboratory of
Schmid & Partner
Engineering AG
Zeughausstrasse 43, 8004 Zurich, Switzerland

Client **PC Test** **Certificate No: 5G-Veri30-1015_Oct18**

CALIBRATION CERTIFICATE

Object	5G Verification Source 30 GHz - SN: 1015
Calibration procedure(s)	QA CAL-45.v2 Calibration procedure for sources in air above 6 GHz
Calibration date:	October 01, 2018

This calibration certificate documents the traceability to national standards, which realize the physical units of measurements (SI).
The measurements and the uncertainties with confidence probability are given on the following pages and are part of the certificate.

All calibrations have been conducted in the closed laboratory facility: environment temperature (22 ± 3)°C and humidity < 70%.

Calibration Equipment used (M&TE critical for calibration)

Primary Standards	ID #	Cal Date (Certificate No.)	Scheduled Calibration
Reference Probe EUmmWV3	SN: 9374	23-Mar-18 (No. EUmmWV3-9374_Mar18)	Mar-19
DAE4	SN: 1215	26-Feb-18 (No. DAE4-1215_Feb18)	Feb-19

Secondary Standards	ID #	Check Date (in house)	Scheduled Check

	Name	Function	Signature
Calibrated by:	Leif Klysner	Laboratory Technician	
Approved by:	Katja Pokovic	Technical Manager	

Issued: October 4, 2018

This calibration certificate shall not be reproduced except in full without written approval of the laboratory.

Glossary

CW	Continuous wave

Calibration is Performed According to the Following Standards

- Internal procedure QA CAL-45-5Gsources
- IEC TR 63170 ED1, "Measurement procedure for the evaluation of power density related to human exposure to radio frequency fields from wireless communication devices operating between 6 GHz and 100 GHz", January 2018
- S. Pfeifer et al. Total Field Reconstruction in the Near Field Using Pseudo-Vector E-Field Measurements, *IEEE Transactions on Electromagnetic Compatibility*, TEMC.2018.2837897

Methods Applied and Interpretation of Parameters

- *Coordinate System:* z-axis in the waveguide horn boresight, x-axis is in the direction of the E-field, y-axis normal to the others in the field scanning plane parallel to the horn flare and horn flange.
- *Measurement Conditions: (1) 10 GHz:* The forward power to the horn antenna is measured prior and after the measurement with a power sensor. During the measurements, the horn is directly connected to the cable considering the 0.4dB horn loss. (2) 30, 60 and 90 GHz: The verification sources are switched on for at least 30 minutes. Absorbers are used around the probe cup and at the ceiling to minimize reflections.
- *Horn Positioning:* The waveguide horn is mounted vertically on the flange of the waveguide source to allow vertical positioning of the EUmmW probe during the scan. The plane is parallel to the phantom surface. Probe distance is verified using mechanical gauges positioned on the flare of the horn.
- *E- field distribution:* E field is measured in two x-y-plane (10mm, 10mm + $\lambda/4$) with a vectorial E-field probe. The E-field value stated as calibration value represents the E-field-maxima.
- *Power Density:* The power density values averaged over 1cm^2 and 4cm^2 at 10mm in front of the horn are reconstructed from the E-field according to TEMC.2018.2837897.
- *Field polarization:* Above the open horn, linear polarization of the field is expected. This is verified graphically in the field representation.

Calibrated Quantity

- Local peak E-field (V/m) and peak values of the total and normal component of the poynting vector |Re{S}| and n.Re{S} averaged over the surface area of 1 cm^2 ($pS_{tot}avg1cm^2$ and $pS_n avg1cm^2$) and 4cm^2 ($pS_{tot}avg4cm^2$ and $pS_n avg4cm^2$) at the nominal operational frequency of the verification source.

The reported uncertainty of measurement is stated as the standard uncertainty of measurement multiplied by the coverage factor k=2, which for a normal distribution corresponds to a coverage probability of approximately 95%.

Measurement Conditions

DASY system configuration, as far as not given on page 1.

DASY Version	cDASY6 Module mmWave	V1.4
Phantom	5G Phantom	
Distance Horn Aperture - plane	10 mm	
XY Scan Resolution	dx, dy = 2.5 mm	
Number of measured planes	2 (10mm, 10mm + λ/4)	
Frequency	30 GHz ± 10 MHz	

Calibration Parameters, 30 GHz

Distance Horn Aperture to Measured Plane	P_{rad}[1] *(mW)*	**Max E-field (V/m)**	Uncertainty ($k = 2$)	Avg Power Density n.Re{S}, |Re{S}| (W/m²)		Uncertainty ($k = 2$)
				1 cm²	**4** cm²	
10 mm	33.5	**135**	1.27 dB	**41.7, 42.0**	**35.5, 36.1**	1.28 dB

[1] derived from far-field data

DASY Report

Measurement Report for 5G Verification Source 30 GHz, UID 0 -, Channel 30000 (30000.0MHz)

Device under Test Properties

Name, Manufacturer	Dimensions [mm]	IMEI	DUT Type
5G Verification Source 30 GHz	100.0 x 100.0 x 100.0	SN: 1015	-

Exposure Conditions

Phantom Section	Position, Test Distance [mm]	Band	Group,	Frequency [MHz], Channel Number	Conversion Factor
5G -	5.55 mm	Validation band	CW	30000.0, 30000	1.0

Hardware Setup

Phantom	Medium	Probe, Calibration Date	DAE, Calibration Date
5G Phantom	Air	EUmmWV3 - SN9374, 2018-03-23	DAE4 Sn1215, 2018-02-26

Scan Setup

	5G Scan
Grid Extents [mm]	60.0 x 60.0
Grid Steps [lambda]	0.25 x 0.25
Sensor Surface [mm]	5.55
MAIA	MAIA not used

Measurement Results
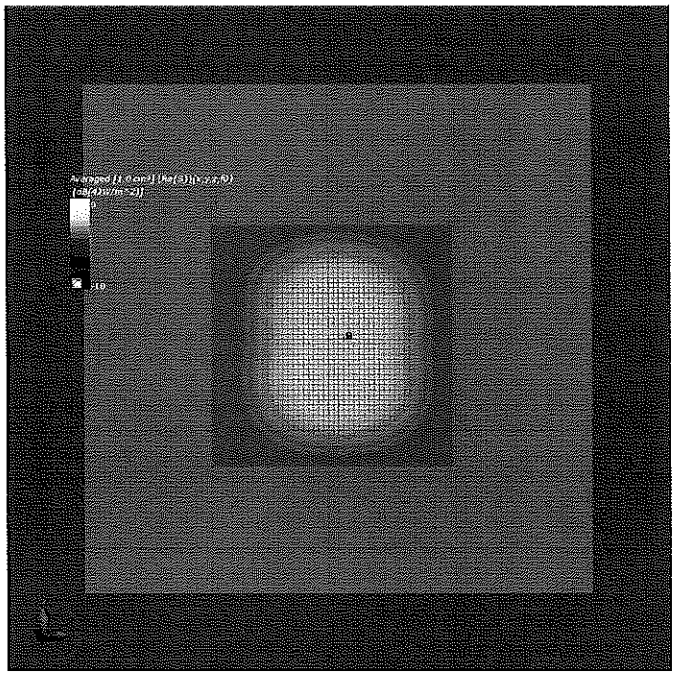
	5G Scan
Date	2018-10-01, 17:20
Avg. Area [cm²]	1.00
pS_{tot} avg [W/m²]	42.0
pS_n avg [W/m²]	41.7
E_{peak} [V/m]	135
Power Drift [dB]	-0.07