Guía del Usuario

VN210

This booklet is made from 98% post-consumer recycled paper.

PRINTED WITH SOY INK This booklet is printed with soy ink. Printed in Mexico

BC

XXXXXXXXXX (1.0) ME

User Guide

VN210

User Guide

VN210

Copyright©2015 LG Electronics, Inc. ***All rights reserved****.*
LG and the LG logo are registered trademarks of LG Corp.
All other trademarks are the property of their respective owners.

Table of Contents · · · · · · · · · 1

Welcome · · · · · · · · · · · · · · · · · 6

Phone Overview · · · · · · · · · · · 7
Rear view · 8

Menus Overview · · · · · · · · · · 9

Getting Started with Your Phone · · · · · · · · · · · · · · · · · 12
Installing the Battery · · · · · · · · · · · · · · 12
Removing the Battery · · · · · · · · · · · · · 12
Charging the Battery · · · · · · · · · · · · · · 12
Charging with USB · · · · · · · · · · · · · · · · 13
Battery Temperature Protection · · · · 13
Battery Charge Level · · · · · · · · · · · · · · 13
Signal Strength · · · · · · · · · · · · · · · · · · 13
Turning the Phone On and Off · · · · · · 13
Turning the Phone On · · · · · · · · · · · · · · 13
Turning the Phone Off · · · · · · · · · · · · · · 13
Making Calls · 13
Correcting Dialing Mistakes · · · · · · · · · 14
Redialing Calls · · · · · · · · · · · · · · · · · · 14
Receiving Calls · · · · · · · · · · · · · · · · · · 14
Screen Icons · 14

Quick Access to Convenient Features · · · · · · · · · · · · · · · · 15
Vibrate Mode · · · · · · · · · · · · · · · · · · · 15
Sounds Off · 15
Mute Function · · · · · · · · · · · · · · · · · · 15
Quick Volume Adjustment · · · · · · · · · · 15
Quick Font Resize · · · · · · · · · · · · · · · · · 15
Call Waiting · 15
3-way call · 16
Caller ID · 16
Voice Commands · · · · · · · · · · · · · · · · · 16

Entering and Editing Information · · · · · · · · · · · · · · 18
Text Input · 18
Text Input Modes · · · · · · · · · · · · · · · · · · 18

Contacts in Your Phone's Memory · · · · · · · · · · · · · · · · 19
Storing Basics · · · · · · · · · · · · · · · · · · · 19
Customizing Individual Entries · · · · · · 19
Speed Dial · 19
Storing a Number with Pauses · · · · · · 20
Adding a Pause to an Existing Contact Entry · 20
Adding Another Phone Number · · · · · 21
From standby mode · · · · · · · · · · · · · · · · 21
From the Contact List Screen · · · · · · · · 21
Changing Saved Information · · · · · · · · 21
Changing the Default Number · · · · · · 21
Deleting · 22
Deleting a Contact Entry · · · · · · · · · · · 22
Removing a Speed Dial · · · · · · · · · · · · · 22
Speed Dialing · 22
Single Digit Speed Dials · · · · · · · · · · · · 22
Multiple Digit Speed Dials · · · · · · · · · · 22
Speed Dials 95, 96, 97, 98, and 99 · · 23

Table of Contents

Contacts ····· 24

1. New Contact ····· 24

2. Contact List ····· 24

3. Backup Assistant ····· 25

4. Favorites ····· 25

5. Groups ····· 25

Adding Contacts to a Group ····· 26

6. Speed Dials ····· 26

7. In Case of Emergency ····· 27

Entering Your ICE Personal Info ····· 27

To unassign an ICE Contacts ····· 27

To delete Personal Info entry ····· 27

8. My Name Card ····· 28

Messaging ····· 29

New Message Alert ····· 29

1. New Message ····· 29

The Basics of Sending a Text Message 29

Select Recipient(s) Using Add ····· 30

Multimedia Message Using Options ····· 30

2. Inbox ····· 31

Viewing Your Inbox ····· 31

Message Icon Reference ····· 32

3. Sent ····· 33

4. Drafts ····· 33

Message Icon Reference ····· 34

5. Voice mail ····· 34

6. Mobile Email ····· 34

7. Social Networks ····· 35

Messaging Settings ····· 35

Message Settings Sub-Menu Descriptions 35

Erasing Messages ····· 37

Recent Calls ····· 38

1. Missed ····· 38

2. Received ····· 38

3. Dialed ····· 39

4. All ····· 39

5. View Timers ····· 39

Internet ····· 41

Media Center ····· 42

1. Apps ····· 42

2. Internet ····· 42

3. Tunes & Tones ····· 43

3.1 My Ringtones ····· 44

3.2 My Sounds ····· 44

4. Pictures ····· 45

4.1 My Pictures ····· 45

4.2 Take Picture ····· 46

Mobile Email / Apps/ My Pictures ····· 47

Settings & Tools ····· 48

1. My Verizon ····· 48

2. Master Volume ····· 48

3. Accessibility ····· 48

3.1 Readout ····· 48

3.1.1 Full Readout 48
3.1.2 Menu Readout 48
3.1.3 Digit Dial Readout 48
3.1.4 Caller ID Readout 48
3.1.5 Passwords Readout 49
3.1.6 Speech Rate 49
3.2. Invert Color 49
3.3. Large Text 49
3.4. Mono Audio 49
3.5. Turn Off All Sounds 50

4. Tools 50
4.1 Voice Commands 50
Access and Options 50
4.1.1 Call <Name or Number> 51
4.1.2 Send Msg to <Name or Number or Group> 51
4.1.3 Go to <Menu> 51
4.1.4 Check <Item> 51
4.1.5 Contacts <Name> 52
4.1.6 Search 52
4.1.7 Redial 52
4.1.8 My Verizon 52
4.1.9 Help 52
4.2 Calculator 52
4.3 Ez Tip Calculator 53
4.4 Eco-Calculator 53
4.5 Calendar 54
Editing and Deleting calendar entries 54
4.6 Alarm Clock 54
How to delete alarms 55
How to edit alarms 55
4.7 Info Search 55
4.8 Stopwatch 56
4.9 World Clock 56
4.10 Notepad 56

5. Bluetooth® Menu 57
Turn On Bluetooth 57
5.1. Add New Device 57
For pairing with a new Bluetooth® device 57
Icon Reference in Adding New Device 58
Icon References When a Bluetooth® Wireless Connection is Searched (neither connected nor paired). 58
Icon References When Successfully Connected 58
My Phone Info 59
Discovery Mode 59
Supported Profiles 60

6. Sounds Settings 60
6.1 Easy Set-up 60
6.2 Call Sounds 60
6.2.1 Call Ringtone 60
6.2.2 Call Vibrate 60
6.2.3 Caller ID Readout 61
6.3 Alert Sounds 61
6.4 Keypad Volume 61
6.5 Service Alerts 61
6.6 Hearing Assist 62

7. Display Settings 62
7.1 Easy Set-up 62
7.2 Banner 63
7.2.1 Personal Banner 63
7.2.2 ERI Banner 63
7.3 Backlight 64

7.4 Brightness ····· 64
7.5 Wallpaper ····· 64
7.6 Display Themes ····· 64
7.7 Main Menu Settings ····· 65
7.8 Font Type ····· 65
7.9 Font Size ····· 66
7.10 Clock Format ····· 66

8. Phone Settings ····· 66
8.1 Airplane Mode ····· 66
8.2 Set Shortcut Keys ····· 67
8.2.1 Set My Shortcuts ····· 67
8.2.2 Set Directional Keys ····· 67
8.3 Voice Commands ····· 67
8.4 Language ····· 67
8.5 Location ····· 68
8.6 Security ····· 68
8.6.1 Edit Codes ····· 68
8.6.2 Restrictions ····· 69
8.6.3 Phone Lock Setting ····· 69
8.6.4 Lock Phone Now ····· 70
8.6.5 Reset Default ····· 70
8.6.6 Restore Phone ····· 70
8.7 System Select ····· 70
8.8 NAM Select ····· 71
8.9 Data Roaming Access ····· 71

9. Call Settings ····· 71
9.1 Answer Options ····· 71
9.2 Call Forwarding ····· 72
9.3 Auto Retry ····· 72
9.4 TTY Mode ····· 72
Connecting TTY Equipment and a Terminal ····· 73
9.5 One Touch Dial ····· 74
9.6 Voice Privacy ····· 74
9.7 DTMF Tones ····· 74
9.8 Assisted Dialing ····· 74

10. Memory ····· 75

11. Phone Info ····· 75
11.1 My Number ····· 75
11.2 SW/HW Version ····· 75
11.3 Icon Glossary ····· 75
11.4 Software Update ····· 76

12. Set-up Wizard ····· 77

Important Safety Precautions 78

Safety ····· 81

Consumer Information About Radio Frequency Emissions ····· 83

Consumer Information on SAR ····· 87

FCC Hearing-Aid Compatibility (HAC) Regulations for Wireless Devices ····· 88

Caution: Avoid potential hearing loss. ····· 90

TIA Safety Information ····· 91

Safety Information ····· 94

FDA Consumer Update ····· 99

Driving ····· 107

10 Driver Safety Tips ····· 107

LIMITED WARRANTY STATEMENT · · · · · · · · · · · · 110

Technical Details · · · · · · · · · 114

Important Information · · · · · · · · · · · · 114

Glossary · · · · · · · · · · · · · · · · 119

Terminology · · · · · · · · · · · · · · · · · 119

Acronyms and Abbreviations · · · 119

Index · · · · · · · · · · · · · · · · · · · 121

Welcome

Thank you for choosing the LG VN210 cellular phone designed to operate with the latest digital mobile communication technology, Code Division Multiple Access (CDMA). Along with the many advanced features of the CDMA system, such as greatly enhanced voice clarity, this compact phone offers:

- Built-in 1.3M camera
- Internet
- Sleek and compact design
- Easy-to-read LCD display with status icons
- Media Center capable of downloading games, wallpapers, and ringtones
- 25-key keypad and Directional Keys
- Long battery standby and talk time
- Easy operation using menu-driven interface with prompts
- Messaging, Voice mail, caller ID, and social networks
- Advanced Voice Recognition
- Quick calling functions including auto answer, auto retry, 999 speed dials, and voice commands
- Flash Wallpapers with fun animations
- Multi-language (English, Spanish, Korean and Chinese) capability
- Bluetooth® wireless technology (for certain profiles)

NOTE The Bluetooth® word mark and logos are owned by the Bluetooth SIG, Inc. and any use of such marks by LG Electronics is under license. Other trademarks and trade names are those of their respective owners.

Tip
Find the interactive user guide on the web for your convenience; where you can freely surf and interactively learn how to use your phone step-by-step.
Go to http://www.verizonwireless.com > Support > Device > choose your phone model. The interactive user guide is available. You can select Device Manual to download a copy.

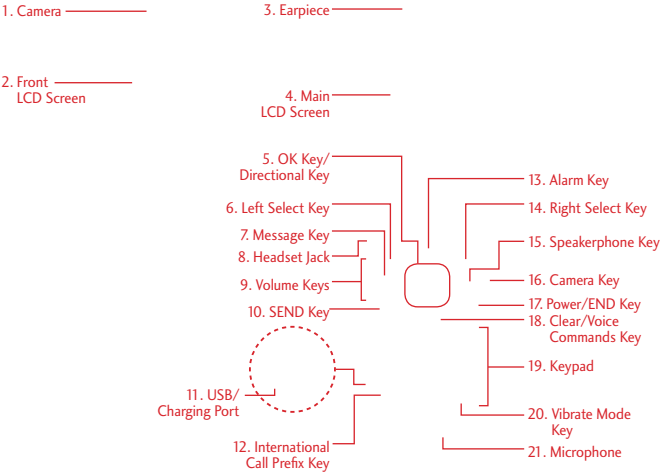

1. Camera Use to take photos. Keep it clean for optimal photo quality.
2. Front LCD Screen Displays the digital clock, date and phone status.
3. Earpiece Lets you hear the caller and automated prompts.
4. Main LCD Screen Displays messages, indicator icons and active functions.
5. OK Key/Directional Key Use the OK key to select the function displayed at the bottom of the LCD between the Left and **Right Select key** functions. Use the **Directional key** to scroll through the menu items and highlight a specific field or object by moving up, down, left or right.
6. Left Select Key Performs functions identified on the bottom-left corner of the screen.
7. Message Key Quickly and easily opens a new TXT message.
8. Headset Jack Allows you to plug in an optional 3.5mm headset for convenient, hands-free conversations.
9. Volume Keys Use to adjust the Master Volume in standby mode* and the Earpiece Volume during a call. Use to adjust font sizes when viewing messages, entering phone numbers (in standby mode) or browsing menus (except for the Main menu).
10. SEND Key Use to make and answer calls. Press to access the All Calls list.
11. USB/Charging Port Connects the phone to the USB charger, or other compatible accessories.

* Standby mode is when the phone is waiting for input from you. No menu is displayed and the phone isn't performing any action. It's the starting point for all of the instruction steps.

12. International Call Prefix Key To make an international call, press and hold for 3 seconds. + is the international calling code.
13. Alarm Key Press to access and manage your alarms.
14. Right Select Key Performs functions identified on the bottom-right corner of the screen.
15. Speakerphone Key Use to change to speakerphone mode.
16. Camera Key Press to access the Camera.
17. Power/ END Key Use to turn the power on/ off and to end a call. Also returns to standby mode.
18. Clear/ Voice Commands Key Deletes single spaces or characters with a quick press, or press and hold to delete entire words in text entry screens. Press to back out of menus, one level at a time. From the standby screen, press once to access Voice Commands and press and hold to access Voice Recorder.
19. Keypad Use to enter numbers and characters and select menu items.
20. Vibrate Mode Key Use to set Vibrate mode (from standby mode press and hold for about 3 seconds).
21. Microphone Allows other callers to hear you clearly when you are speaking to them.

Rear view

Back Cover

Battery

NOTE

- It's important to fully charge the battery before using the phone for the first time.
- Battery life and signal strength are significant factors (among others) that affect your phone's ability to send/receive calls or data transfer.

NOTE

The antenna is located inside your phone.

Tip

If you hold the phone enclosing the lower edge, you may interfere with the antenna's ability to receive a clear signal which affects call quality for voice or data transfer.

Contacts

1. New Contact

2. Contact List

3. Backup Assistant

4. Favorites

5. Groups

6. Speed Dials

7. In Case of Emergency

8. My Name Card

Messaging

1. New Message

2. Inbox

3. Sent

4. Drafts

5. Voice mail

6. Mobile Email

7. Social Networks

Options

1. Erase Inbox
2. Erase Sent
3. Erase Drafts
4. Erase All

Settings

1. Inbox View
2. Entry Mode
3. Auto Save Sent
4. Auto Erase Inbox
5. Messaging Font Size
6. TXT Auto View
7. TXT Instant Reply
8. Group Messaging
9. TXT Auto Scroll
10. Multimedia Auto Receive
11. Quick Text
12. Emergency Alerts
13. Voice mail #
14. Callback #
15. Signature
16. Delivery Receipt
17. TXT-Media Msg Notification

Recent Calls

1. Missed

2. Received

3. Dialed

4. All

5. View Timers

Internet

Media Center

1. Apps

2. Internet

3. Tunes & Tones

1. My Ringtones
2. My Sounds

4. Pictures

1. My Pictures
2. Take Picture

Info

1. Application Memory
2. Phone Memory

Mobile Email

Apps

My Pictures

Settings & Tools

1. My Verizon

2. Master Volume

3. Accessibility

1. Readout
   1. Full Readout
   2. Menu Readout
   3. Digit Dial Readout
   4. Caller ID Readout
   5. Passwords Readout
   6. Speech Rate
2. Invert Color
3. Large Text
4. Mono Audio
5. Turn Off All Sounds

4. Tools

1. Voice Commands
   1. Call <Name or Number>
   2. Send Msg to <Name or Number or Group>
   3. Go to <Menu>

4. Check <Item>
5. Contacts <Name>
6. Search
7. Redial
8. My Verizon
9. Help

Settings

1. Confirm Choices
2. Sensitivity
3. Train Voice
4. Prompts
5. CLR Key Activation

2. Calculator
3. Ez Tip Caculator
4. Eco-Calculator
5. Calendar
6. Alarm Clock
7. Info Search
8. Stopwatch
9. World Clock
10. Notepad

5. Bluetooth Menu

1. Add New Device

6. Sounds Settings

1. Easy Set-up
2. Call Sounds
   1. Call Ringtone
   2. Call Vibrate
   3. Caller ID Readout
3. Alert Sounds
   1. TXT Message
   2. Multimedia Message
   3. Voice mail
   4. Emergency Tone
   5. Missed Call
4. Keypad Volume
5. Service Alerts
   1. ERI
   2. Minute Beep
   3. Call Connect
   4. Charge Complete
   5. Software Update
6. Hearing Assist

7. Display Settings

1. Easy Set-up
2. Banner
   1. Personal Banner
   2. ERI Banner
3. Backlight
   1. Display Backlight
   2. Keypad Backlight
4. Brightness
5. Wallpaper
   1. My Pictures
   2. Fun Animations
   3. Slide Show
6. Display Themes
7. Main Menu Settings
   1. Menu Layout
   2. Replace Menu Items
   3. Position Menu Items
   4. Reset Menu Settings
8. Font Type
9. Font Size
10. Clock Format

8. Phone Settings

1. Airplane Mode
2. Set Shortcut Keys
   1. Set My Shortcuts
   2. Set Directional Keys
3. Voice Commands
   1. Confirm Choices
   2. Sensitivity
   3. Train Voice
   4. Prompts
   5. CLR Key Activation
4. Language
5. Location
6. Security
   1. Edit Codes
   2. Restrictions
   3. Phone Lock Setting
   4. Lock Phone Now
   5. Reset Default
   6. Restore Phone
7. System Select
8. NAM Select
9. Data Roaming Access

9. Call Settings

1. Answer Options
2. Call Forwarding
3. Auto Retry
4. TTY Mode
5. One Touch Dial
6. Voice Privacy

7. DTMF Tones
8. Assisted Dialing

10. Memory

1. Memory Usage
2. My Pictures
3. My Ringtones
4. My Sounds
5. My Contacts

11. Phone Info

1. My Number
2. SW/HW Version
3. Icon Glossary
   1. Status
   2. Home Screen
   3. Media Center
   4. Messaging
   5. Contacts
   6. Recent Calls
   7. Settings & Tools
4. Software Update
   1. Status
   2. Check New

12. Set-up Wizard

Installing the Battery

1. Insert your fingernail into the opening at the bottom of the back cover and lift the cover to remove it.
2. Align the battery contacts with the terminals near the top of the battery compartment and press until you hear the “click”.
3. Align the back cover and press it downward until it clicks into place.

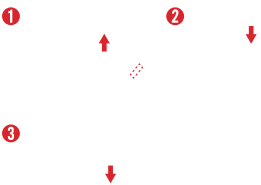

Removing the Battery

1. Turn the phone off.
2. Insert your fingernail into the opening at the bottom of the back cover and lift the cover to remove it.
3. Use the fingertip opening near the bottom of the battery compartment to lift the battery out.

Charging the Battery

Your device comes with a USB adapter and a USB cable which connect together to charge your phone. To charge your phone:

NOTICE Please use only an approved charging accessory to charge your LG phone. Improper handling of the USB/ Charging Port, as well as the use of an incompatible charger, may cause damage to your phone and void the warranty.

1. Connect the USB cable into the USB adapter. When connecting as shown below, the LG logo on the USB cable should face toward you.

USB Adapter

2. Plug the small end of the adapter into the phone’s USB/ Charging Port and the other end into an electrical outlet.

NOTE Please make sure that the ‘ψ’ side faces up before inserting a charger or USB cable into the USB/Charging Port of your phone.

The charge time varies depending upon the battery level.

Charging with USB

You can use your computer to charge your phone. To be able to charge with the USB cable, you may need to have the necessary USB Driver installed on your PC first. Connect one end of the USB cable to the USB/Charging Port on your phone and the other end to the USB port on your PC.

NOTE Low-power USB ports are not supported, such as the USB ports on your keyboard or bus-powered USB hub.

Battery Temperature Protection

If the battery gets overheated, the phone will automatically turn off. When you turn the phone back on, a message pops up alerting you that the phone was powered off for your safety.

Battery Charge Level

You can find the battery charge level at the top right corner of the LCD screen. When the charge level becomes low, the battery sensor sounds a warning tone, blinks the battery icon, and/or displays a warning message. As the charge level approaches empty, the phone automatically switches off.

Signal Strength

Call quality depends on the signal strength in your area. You can tell how much signal strength you have by the number of bars next to the signal strength icon - the more bars, the stronger the signal. If you're having problems with signal quality, move to an open area or, when inside a building, try moving near a window.

Turning the Phone On and Off

Turning the Phone On

1. Insert the battery and connect the phone to an external power source if the battery level is low.
2. With the phone open, press the **Power/END key** until the LCD screen lights up.

Turning the Phone Off

With the phone open, press and hold the **Power/END key** until the LCD screen turns off.

Making Calls

1. Make sure the phone is turned on. If not, open the phone and press the **Power/END key**

for about three seconds. If necessary, enter the lock code.

2. Enter the phone number.
3. Press the **SEND key** to dial the call.
4. Press the **Power/END key** to end the call.

NOTE Your phone has a Voice Commands feature that also lets you make calls by saying a phone number or Contact name.

Correcting Dialing Mistakes

While entering a phone number, press the **Clear key** once to erase the last digit entered, or hold it down for at least two seconds to delete all the digits.

Redialing Calls

With the phone open, press the **SEND key** twice to redial the last number dialed.

Receiving Calls

When the phone rings or vibrates, you can answer the call by simply opening the phone. If the phone is already open, answer the call by pressing any key.

To end the call, simply close the phone or press the **Power/END key**.

To add more answer options, press the **OK key** MENU. Then select **Settings & Tools** > **Call Settings** > **Answer Options** and unmark **Flip Open**.

Then, when the phone rings, you will be able to:

Quiet Mute the ringing or vibration for a call by pressing the **Left Select key**.

Ignore Send the call directly to Voice Mail by pressing the **Right Select key**.

TEXT End the call and send a quick text message to the caller by pressing the **OK key**.

Screen Icons

When the phone is on, the top line of the LCD screen displays phone status icons.

To see the icon glossary, with the phone open, go to **MENU** > **Settings & Tools** > **Phone Info** > **Icon Glossary**. Then select a subcategory.

Vibrate Mode

Sets the phone to vibrate instead of ringing (is displayed). To set Vibrate Mode, with the phone open, press and hold #. To return to Normal Mode, press and hold # again.

Sounds Off

Quickly deactivate your phone's sounds when you're in a place where phone sounds would be disruptive.

From standby mode with the phone open, press and hold the Volume Down key for 3 seconds. To return to normal sounds mode, press and hold the Volume Up key.

Mute Function

The Mute Function prevents the transmission of your voice to the caller. To quickly activate Mute while on a call, press the **Left Select key** Mute, then to unmute press the **Left Select key** Unmute again.

Quick Volume Adjustment

Quickly adjust ringer and earpiece volumes by pressing the Volume keys on the left side of the phone. Press the Volume Up key to increase and Volume Down key to decrease the volume.

NOTE The earpiece volume can only be adjusted during a call and Keypad Volume can only be adjusted through the Sounds Settings menu.

Quick Font Resize

When you view messages, enter phone numbers, or view sub-menus, press the Volume keys up or down to quickly adjust the font size. 3 levels (small, medium, large) of font sizes are available.

Call Waiting

During a call, one beep indicates another incoming call. Press the **SEND key** SEND to answer it and put the first call on hold. Press the **SEND key** SEND again to return to the first call.

3-way call

You can talk with two people at the same time with a three-way conversation on your wireless phone. Airtime and other charges, which may include toll or long distance charges, will apply for all simultaneous calls until you end one call.

1. While on the first call, dial the 10-digit number of the second person.
2. Press the **SEND key** SEND. The first person is automatically put on hold while the call is made.
3. When the second person answers, press the **OK key** OK MERGE to create a conference call.
4. If the second person does not answer, press the **SEND key** SEND twice to end the connection and go back to the first person.
5. To end both conversations completely, press the **Power/ END key** END.

Caller ID

Caller ID displays the number and/ or name and picture (if applicable) of the person calling when your phone rings.

Voice Commands

Voice Commands allow you to do things by verbal command (e.g., make calls, check Voice mail, etc.). With the phone open, press the **Voice Commands key** CLR on the keypad.

1. Call Say "Call" and then call someone simply by saying the name or phone number.
2. Send Msg to Say "Send Message" and the command will prompt you for the type of message.
3. Go to This allows you to access a menu within the phone.
4. Check This allows you to check out a wide range of items such as **Phone Status**, **Voice mail**, **Message**, **Missed Calls**, **Time**, **Signal Strength**, **Battery Level**, **Volume**, **Balance**, **Minutes**, **Payment** and **My Number**.
5. Contacts You can look up names in your Contacts as well as manage your Contact List including creating, erasing or modifying.
6. Search The "Search" command opens the browser and allows you to search for information over the internet.

7. Redial Say "Redial" and the phone will redial the last phone number.
8. My Verizon This command provides you with direct access to your Verizon Wireless account information.
9. Help Provides a general guideline to using Voice Commands.

NOTE Voice Commands can also be started with the designated key on your Bluetooth® device. Please check the user manual of the Bluetooth® device for further instructions.

Text Input

The following key functions are available to help with text entry:

Left Select key: Press to change the text input mode.

Shift: Press to change capitalization (initial cap, caps lock, lowercase).

Next: Press to display other matching words in the database in T9 word mode.

Space: Press to complete a word and insert a space.

Clear: Press to delete a single space or character. Hold to delete words.

Punctuation: Press to insert punctuation symbols.

Text Input Modes

In a text field, press the **Left Select key** to select a text input mode:

T9 Word/ Abc/ ABC/ 123/ T9 Palabra/ Symbols/ Quick Text/ Simplified Chinese/ Korean

NOTES

- T9 Palabra is the Spanish counterpart of T9 Word which utilizes accents, tildas, etc. for correct Spanish word spelling.
- Simplified Chinese supports PinYin as entry mode.
- Korean provides a key guide. To use the key guide, select **Options** > **Show Key Guide**.

Storing Basics

1. With the phone open, enter a number (max. 48 digits), then press the **Left Select key** Save.
2. Use the **Directional key** to highlight **Add New Contact/ Update Existing**, then press the **OK key** OK.
3. Use the **Directional key** to highlight **Mobile 1/ Home/ Business/ Mobile 2/ Fax**, then press the **OK key** OK.
4. Enter a name (max. 32 characters), and any additional information, then press the **OK key** OK SAVE.

NOTE If you selected **Update Existing** after you select the number type, the contact information is automatically updated.

Customizing Individual Entries

1. With the phone open, press the **Right Select key** Contacts, then use the **Directional key** to highlight an entry.
2. Press the **Left Select key** Edit.
3. Use the **Directional key** to highlight the information to customize.
4. Change the entry as you want, then press OK SAVE to save your changes.

Speed Dial

Allows you to set up your Speed Dials.

1. With the phone open, press the **Right Select key** Contacts, then use the **Directional key** to highlight an entry.
2. Press the **Left Select key** Edit.
3. Use the **Directional key** to highlight a phone number, then press the **Right Select key** Options.
4. Use the **Directional key** to highlight **Set Speed Dial**, then press the **OK key** OK.
5. Select a Speed Dial digit.
   - Enter a digit using the keypad, then press the **OK key** OK SET.
   - Use the **Directional key** to highlight the Speed Dial digit, then press the **OK key** OK SET.
6. Press the **OK key** OK **Yes** to confirm, then press the **OK key** OK SAVE to update your contact entry.

Storing a Number with Pauses

Pauses allow you to enter additional series of numbers to access automated systems such as Voice mail or credit billing numbers. Pause types are:

Wait (W) The phone stops dialing until you press the **Left Select key** Release to advance to the following series of numbers.

2-Sec Pause (P) The phone waits two seconds before dialing the next string of digits.

1. With the phone open, enter the phone number, then press the **Right Select key** Options.
2. Use the **Directional key** to highlight **Add 2-Sec Pause** or **Add Wait**, then press the **OK key** OK.
3. Enter the additional number(s) (e.g., pin number, credit card number, etc.).
4. Press the **Left Select key** SAVE.
5. Choose **Add New Contact/ Update Existing**.
6. Choose **Mobile 1/ Home/ Business/ Mobile 2/ Fax**.
7. Continue entering information for the Contact entry as necessary.

NOTE If you selected **Update Existing** after you select the number type, the contact information is automatically updated. You do not have the option to enter additional information.

8. Press the **OK key** OK SAVE to update your contact entry.

Adding a Pause to an Existing Contact Entry

1. With the phone open, press the **Right Select key** Contacts.
2. Use the **Directional key** to highlight a Contact entry, then press the **Left Select key** Edit.
3. Use the **Directional key** to highlight the number, then press the **Right Select key** Options.
4. Press 3 def Add 2-Sec Pause or 4 ghi Add Wait.
5. Enter the additional number(s), then press the **OK key** OK SAVE to update your contact entry.

Adding Another Phone Number

From standby mode

1. With the phone open, enter a phone number, then press the **Left Select key** SAVE.
2. Use the **Directional key** to highlight **Update Existing**, then press the **OK key** OK.
3. Use the **Directional key** to highlight an existing entry then press the **OK key** OK to update your contact entry.
4. Use the **Directional key** to highlight **Mobile 1/ Home/ Business/ Mobile 2/ Fax**, then press the **OK key** OK to update your contact entry.

From the Contact List Screen

1. With the phone open, press the **Right Select key** Contacts.
2. Use the **Directional key** to highlight an entry, then press the **Left Select key** Edit.
3. Use the **Directional key** to highlight the phone number field you wish to add. Then enter the number and press the **OK key** OK SAVE to update your contact entry.

Changing Saved Information

To edit any information you stored, access the Edit Contact screen:

1. With the phone open, press the **Right Select key** Contacts.
2. Use the **Directional key** to highlight a Contact entry, then press the **Left Select key** Edit.
3. Use the **Directional key** to highlight the field you want to change.
4. Make the changes, then press the **OK key** OK SAVE to update your contact entry.

Changing the Default Number

The Default Number is the phone number you first entered when you created the Contact. However, another number can be saved as the Default Number.

1. With the phone open, press the **Right Select key** Contacts.
2. Use the **Directional key** to highlight an entry.
3. Press the **Left Select key** Edit.
4. Use the **Directional key** to highlight a phone number, then press the **Right Select key** Options.

5. Use the **Directional key** to highlight Set As Default, then press the **OK key** OK.
6. Press the **OK key** OK Yes to confirm the new number as the default.
   A confirmation message is displayed.
7. Press the **OK key** OK SAVE to update your contact entry.

Deleting

Deleting a Contact Entry

1. With the phone open, press the **Right Select key** Contacts.
2. Use the **Directional key** to highlight an entry.
3. Press the **Right Select key** Options.
4. Press 2abc **Erase**.
5. Press the **OK key** OK Yes to confirm.

Removing a Speed Dial

1. With the phone open, press the **Right Select key** Contacts.
2. Use the **Directional key** to highlight a Contact entry to edit and press the **OK key** OK VIEW.
3. Highlight the phone number with the Speed Dial, then press the **OK key** OK EDIT.
4. Press the **Right Select key** Options.
5. Press 1 **Remove Speed Dial**.
6. Press the **OK key** OK Yes to confirm.
7. Press the **OK key** OK SAVE to update your contact entry.

Speed Dialing

Allows you to make phone calls quickly and easily to numbers stored in Contacts.

NOTE Speed Dial 1 is reserved for Voice mail.

Single Digit Speed Dials

Press and hold the Speed Dial digit. Your phone recalls the phone number from your Contacts, displays it, and dials it for you.

Multiple Digit Speed Dials

When you press and hold a number key, it signals the phone to call a Speed Dial. To dial Speed Dials with multiple digits, press the first digit(s), then press and hold the last digit. For example, to call Speed Dial 25, press 2abc, then press and hold 5jkl.

NOTE You can also enter the Speed Dial digit(s) and press the **SEND key** SEND.

Speed Dials 95, 96, 97, 98, and 99

Speed Dials 95, 96, 97, 98, and 99 are preset to access certain phone account information:
95 (#Warranty Center),
96 (#DATA - Data Used),
97 (#BAL - Check Balance),
98 (#MIN - Minutes Used),
99 (#PMT - Make a Payment)
and 411 (Directory Assistance).
Unlike Speed Dial 1, these can be changed if you want.

Contacts

The Contacts menu allows you to store names, phone numbers and other information in your phone's memory.

Shortcut The **Right Select key** is a shortcut key to the Contact List.

1. New Contact

Allows you to add a new contact to your Contact List.

NOTE Using this submenu, the number is saved as a new Contact, not into an existing Contact.

1. Open the phone and press the **OK key** OK MENU.
2. Press 1 **Contacts**.
3. Press 1 **New Contact**.
4. Enter the name and press the **Directional key** downward until the phone number type you want is highlighted.
5. Enter the number and any additional contact information and press the **OK key** OK SAVE to update your contact entry.

NOTE For more detailed information, see page 19.

2. Contact List

Allows you to view your Contact List.

1. Open the phone and press the **OK key** OK MENU.
2. Press 1 **Contacts**.
3. Press 2 abc **Contact List**.
4. Use the **Directional key** to scroll through your Contacts alphabetically.
   - Press the **Right Select key** Options to select one of the following:

     New Contact/ Erase/ New Message/ Set As ICE Contact/ Call/ Manage Contacts/ Set As Favorite/ Search Entry Mode
   - Press the **Left Select key** Edit to edit.
   - Press the **OK key** OK VIEW to view the entry details.

TIP Use the **Go To** field, for quick access to an entry without scrolling. For example, to go to "Vet", enter the letter V.

3. Backup Assistant

You can save your phone's address book to a secure server. If your phone is lost or damaged, or if you upgrade to a new phone, Backup Assistant will restore your contacts. Go to **www.vzw.com/baplus**.

NOTE Subject to specific terms of use. See **www.vzw.com/baplus** for details.

1. Open the phone and press the **OK key** OK MENU.
2. Press 1 **Contacts**.
3. Press 3 **Backup Assistant**.
4. Follow the instructions to download the application.

4. Favorites

Allows you to add Contact entries or Contact groups to your list of Favorites to easily view, call, or send messages.

1. Open the phone and press the **OK key** OK MENU.
2. Press 1 **Contacts**.
3. Press 4 **Favorites**.
4. Press the **OK key** OK ADD.

TIP You can add up to 10 Contacts and/or Contact groups as Favorites to easily make calls, send messages, and view messages.

5. Select whether you want to add a favorite from your **Contacts** or **Group**.
6. Use the **Directional key** to scroll through your Contacts or Groups alphabetically and press the **OK key** OK MARK.
7. Press the **Left Select key** Done. Once you have added Contacts to the Favorites list, the following options will become available in the Favorites menu:

   Left Select key: **View**

   OK key: **New Message/ View Messages**

   Right Select key: **Options**

   Remove/ Remove All/ Set As ICE Contact

5. Groups

Allows you to view your grouped Contacts, add a new group, change the name of a group, delete a group, or send a message to everyone in the selected group.

1. Open the phone and press the **OK key** OK MENU.
2. Press 1 **Contacts**.
3. Press 5 **Groups**.
4. View a Group

Use the **Directional key** to highlight a group, then press the **OK key** OK VIEW.

Add a New Group

Press the **Left Select key** New to add a new group to the list. Enter a new name and add a picture, then press the **OK key** OK SAVE.

Group's options

Press the **Right Select key** Options to select one of the following:

New Message/ Edit Group Name & ID/ Edit Members/ Erase Group/ Set As Favorite/ Search Entry Mode

Adding Contacts to a Group

1. From Groups submenu, press the **OK key** OK VIEW and press the **OK key** OK ADD.
2. Highlight a desired contact and press the **OK key** OK MARK.
3. Press **Left Select key** Done to add contact to a group.

6. Speed Dials

Allows you to view your list of Speed Dials or designate Speed Dials for numbers entered in your Contacts.

1. Open the phone and press the **OK key** OK MENU.
2. Press 1 **Contacts**.
3. Press 6 **Speed Dials**.
4. Use the **Directional key** to highlight the Speed Dial position, or enter the Speed Dial digit and press the **OK key** OK SET.
5. Use the **Directional key** to highlight the Contact then press the **OK key** OK SET. (For Contacts with multiple numbers, highlight the number for the Speed Dial, then press the **OK key** OK OK.)
6. Press the **OK key** OK Yes to confirm.
   A confirmation message is displayed.

7. In Case of Emergency

This menu allows you to store names, phone numbers and other information, which will be very helpful in case of emergency.

1. Open the phone and press the **OK key** OK MENU.
2. Press 1 **Contacts**.
3. Press 7 **In Case of Emergency**.
4. Use the **Directional key** to highlight **Contact 1**, **2**, or **3**, then press the **OK key** OK ADD.
5. Press 1 **From Contacts** or 2 **From Favorites** to add a Contact from your Contact List.

   Highlight the Contact, then press the **OK key** OK.

   OR

   Press 3 **New Contact** to enter information not stored in your Contact List.
6. Select the contact and press the **OK key** OK SAVE.
7. The Contact label changes to the specified name.

Entering Your ICE Personal Info

1. Open the phone and press the **OK key** OK MENU.
2. Press 1 **Contacts**.
3. Press 7 **In Case of Emergency**.
4. Use the **Directional key** to highlight **Personal Info**, then press the **OK key** OK VIEW.
5. Use the **Directional key** to highlight one of the **Note** entries, then press the **OK key** OK ADD.
6. Enter information that would be helpful in an emergency (e.g., your medical record number), then press the **OK key** OK SAVE. The note label changes to the text entered.

TIP When you've assigned ICE Contacts and your phone is locked, the **Left Select key** appears as ICE allowing the emergency information to be viewed without unlocking the phone.

To unassign an ICE Contacts

From the ICE Contacts menu, press the **Right Select key** Options, then press 2 **Unassign**. Then press the **OK key** OK Yes.

To delete Personal Info entry

From the Personal Info menu, press the **Right Select key** Erase. Then press the **OK key** OK Yes.

8. My Name Card

Allows you to create, edit, and view your own personal Contact information including name, phone numbers, and email address in one entry.

1. Open the phone and press the **OK key** OK MENU.
2. Press 1 **Contacts**.
3. Press 8 **My Name Card**.
4. Press the **OK key** OK EDIT to enter your personal Contact information.
5. Use the **Directional key** to scroll to the information you want to enter.
6. Enter your information as necessary, then press the **OK key** OK SAVE.

NOTE Press the **Right Select key** Send to send your name card.

Messaging

SHORTCUT From standby mode, pressing the **Left Select key** is a shortcut to Messaging.

Depending on the content and size of your messages, the phone can store up to 790 messages (including a max. of 300 text messages, 100 emergency alerts, 100 multimedia message notifications, and 100 multimedia messages in the Inbox; 100 text messages and 50 multimedia messages in the Outbox; 20 text messages and 20 multimedia messages in Drafts). Content stored in the message may be limited by phone model and service capability. Other limits to available characters per message may exist. Please check with your service provider for system features and capabilities.

- When viewing a received message, you can call the sender back by pressing the **Send key** SEND.

New Message Alert

Your phone can alert you when you have new messages. Options include:

1. The phone displays a message on the screen.
2. The message icon ( ) is displayed on the screen. In the case of a high priority message, the icon( ) will flash.

1. New Message

Send text, picture and voice messages from your phone. Depending on the type of message you choose to send, you can also attach files to your messages including pictures, sounds, voice recordings and name cards.

The Basics of Sending a Text Message

1. Open the phone and press the **OK key** OK MENU.
2. Press 2 abc **Messaging**.
3. Press 1 **New Message**.

   To access this feature, you can press the **Left Select key** Message from standby mode.
4. Enter a phone number or a recipient's name in the **To** field.

   As you enter the phone number or a recipient's name, matching contacts appear. You can choose a suggested recipient or continue entering the phone number.

5. Press the **OK key** OK to access the text field.
6. Use the keypad to enter your message.
7. Press the **OK key** OK SEND.

Select Recipient(s) Using Add

1. Open the phone and press the **OK key** OK MENU.
2. Press 2 abc **Messaging**.
3. Press 1 **New Message**.
4. With the **To** field highlighted, press the **Right Select key** **Add**.
5. Select an option and press the **OK key** OK.

   From Contacts To select a recipient from your Contact List.

   From Recent Calls To select a recipient from Recent Calls.

   Favorites To select a recipient from Favorites.

   Groups To select a recipient from your Groups.
6. Use the keypad to enter your message.
7. Press the **OK key** OK SEND.

Multimedia Message Using Options

Allows you send messages with text, picture, sound and name card attachments.

1. Open the phone and press the **OK key** OK MENU.
2. Press 2 abc **Messaging**.
3. Press 1 **New Message**.
4. Enter a phone number or a recipient's name in the **To** field.
5. Press the **OK key** OK to access the text field.
6. Use the keypad to enter your message.
7. Press the **Right Select key** **Options**.
8. Select an option and press the **OK key** OK.

   1 Attach

   1. **Picture**: Highlight a picture, then press the **OK key** OK.
   2. **Take Picture**: Take a picture of the subject and press the **OK key** OK.
   3. **Sound**: Highlight a sound, then press the **OK key** OK.

4. **Name Card**

1. **My Name Card**: Press the **OK key** OK to add.
2. **From Contacts**: Press the **OK key** OK MARK to mark the name cards you want to send and press Done.

2 abc **Insert Quick Text** Highlight the text and press the **OK key** OK.

3 def **Save As Draft** Press the **OK key** OK to save as draft.

4 ghi **Priority Level** Choose from **High** or **Normal** and press the **OK key** OK SET.

5 jkl **Cancel Message** Select **Yes** to save the message in drafts or **No** to cancel the message without saving the message in drafts.

9. Use the keypad to enter your subject in the subject field.
10. Press the **OK key** OK SEND.

2. Inbox

The phone alerts you in up to 3 ways when you receive a new message:

- By displaying a notification message on the screen.
- By sounding a tone or vibration, if set.
- By displaying (The icon will be when you get a high priority message.)

Viewing Your Inbox

1. Open the phone and press the **Left Select key** Message.
2. Press 2 abc **Inbox**.
3. Highlight a message. The following options are available.

- Press the **OK key** OK OPEN to view the message.
- Press the **Left Select key** Erase to erase the highlighted message.
- Press the **Right Select key** Options to access the following options:

Reply Replies to the sender's address of the received message.

Reply With Copy Replies to the sender's address with a copy of the original message text included.

Forward Forwards the message to other destination address(es).

Add To Contacts Stores the callback number, email address, and numbers from the address of the received message into your Contacts.

Extract Addresses Allows you to extract addresses.

Message Info Allows you to check the received message information.

Manage Inbox Allows you to manage (lock, erase and more) multiple messages.

Sort By Sender/Time Allows you to sort messages alphabetically by sender's name or by time received.

Message Icon Reference

- New Text Message
- Read Text Message
- Unopened Downloaded Multimedia Message
- Opened Downloaded Multimedia Message
- Unread Multimedia Message
- Read Multimedia Message
- Message Delivered
- Message Failed
- Pending Message
- Message Sent
- New Webmail
- Webmail Read
- Multiple Messages Delivered
- Multiple Messages Failed
- Multiple Message Delivery Incomplete
- Multiple Pending Messages
- Multiple Messages Sent
- New Group Message
- Read Group Message
- Group Message Delivered
- Group Message Failed
- Group Message Delivery Incomplete
- Pending Group Message
- Group Messages Sent
- Text Message Draft
- Media Message Draft
- Namecard
- High Priority
- Lock

* Multimedia Message indicates Picture/ Voice Message.

3. Sent

Depending on the content and size of your messages, you can save up to 150 messages (100 SMS/50 MMS). This menu lists your Sent messages. Content stored in the message may be limited by phone model and service capability. Other limits, such as available characters per message, may exist. Please check with your service provider for system features and capabilities. Use it to verify whether the transmission was successful or not and view message contents.

1. Open the phone and press the **Left Select key** Message.
2. Press 3 **Sent**.
3. Highlight a message. The following options are available.

- Press the **OK key** OK OPEN to view the message.
- Press the **Left Select key** Erase to erase highlighted message.
- Press the **Right Select key** Options.

  Forward Forwards a sent message to other destination address(es).

  Send/Resend Allows you to retransmit the selected message.

  Add To Contacts Stores the callback number, email address, and numbers from the address of the message into your Contacts.

  Message Info Allows you to check the sent message information.

  Manage Sent Allows you to manage (erase or lock) multiple messages.

  Sort By Recipient/Time Allows you to sort alphabetically by recipient's name or by time sent.

4. Drafts

Saved message drafts are stored here.

1. Open the phone and press the **OK key** OK MENU.
2. Press 2 **Messaging**.
3. Press 4 **Drafts**.
4. Highlight a message. The following options are available.

- Press OK EDIT to continue editing the message.

- Press the **Left Select key** Erase to erase the message.
- Press the **Right Select key** Options for the following options.

  Send Sends the selected message.

  Add To Contacts Stores the number, email address, and numbers from the address included in the message into your Contacts.

  Manage Drafts Allows you to manage (erase or lock) messages.

Message Icon Reference

TXT Message Draft

Media Message Draft

5. Voice mail

Allows you to view the number of new voice messages recorded in the Voice mail box. Once you exceed the storage limit, old messages are overwritten. When you have a new voice message, your phone will alert you.

Checking Your Voice mail Box

1. Open the phone and press the **OK key** MENU.
2. Press 2 **Messaging**.
3. Press 5 **Voice mail**.
4. The following options are available.

- Press the **Left Select key** Clear to clear the Voice mail Counter, then then press the **OK key** Yes.
- Press the **Send key** or **OK key** CALL to listen to the message(s).

OR

1. Enter * 8 6 (*VM) and press the **Send key** from your phone or dial your wireless phone number from any touch-tone phone.

   OR

   Press and hold 1 from your phone, as a speed dial to your voice mail.
2. When the recorded announcement begins, press # to interrupt (if applicable).
3. When prompted, enter your password, then #.

6. Mobile Email

Allows you to send an email via Internet. You can also send and receive emails through Mobile

Email after downloading the application.

1. Open the phone and press the **OK key** OK MENU.
2. Press 2 abc **Messaging**.
3. Press 6 mno **Mobile Email**.
4. Subscribe to the service (if necessary).
5. Accept the Terms of Service.
6. Highlight an email provider and press the **OK key** OK.
7. Follow the instructions to set up your account(s).

7. Social Networks

The upgraded text-based social networks allow you to update your status, picture upload, and write on someone's wall by sending a text message.

1. Open the phone and press the **OK key** OK MENU.
2. Press 2 abc **Messaging**.
3. Press 7 pqrs **Social Networks**.
4. Select one of the social networking service providers.
5. Update your information as desired.

NOTE Press the **Right Select key** Options and select **Help** to find out how to subscribe to text-based updates.

Messaging Settings

Allows you to configure settings for your messages.

1. Open the phone and press the **OK key** OK MENU.
2. Press 2 abc **Messaging**.
3. Press the **Left Select key** Settings.
4. Use the **Directional key** to highlight one of the settings and press the **OK key** OK to select it.

Message Settings Sub-Menu Descriptions

1. Inbox View

Select **Time** to display messages chronologically in Inbox and Sent folders. Select **Contact** to sort all messages alphabetically by Contact in one message folder.

NOTE By default, Time is set as the Inbox View setting. If changed to Contact, the Messaging menu will appear differently.

2. Entry Mode

Select **T9 Word, Abc, ABC, 123, T9 Palabra, Simplified Chinese** or **Korean** to be your default input method.

3. Auto Save Sent

Select **On** to automatically save your Sent messages.
Select **Off** if you don't want to save automatically.
Select **Prompt** to be asked to save.

4. Auto Erase Inbox

Select **On** to automatically delete read messages when you exceed the storage limit. Or, select **Off**.

5. Messaging Font Size

Select **Small**, **Normal** or **Large** for the size of the Messaging characters.

6. TXT Auto View

Select **On** to automatically display message content on the screen.
Select **On + Readout** to automatically display content and read it aloud.

Select **Off** for more security and privacy by requiring the message to be opened to view it.

7. TXT Instant Reply

Select **On** to text a reply instantly when the device displays an incoming message. Or, select **Off**.

8. Group Messaging

Select default setting for messages to multiple contacts.

If you select **Group Conversation**, recipients can reply to whole group.

If you select **Individual Messages**, recipients can reply only to you.

9. TXT Auto Scroll

Select **On** to automatically scroll text down while viewing messages. Or, select **Off**.

10. Multimedia Auto Receive

Select **On** to automatically download attachments to Multimedia messages.
Or, select **Off**.

11. Quick Text

Displays your list of Quick Text phrases to help you to reduce manual input into messages. Use this submenu to edit and add text.

12. Emergency Alert

Set your configuaration for receiving emergency alerts. This menu has three options:
Receive Alerts/ Alert Reminder/ Alert Vibrate

13. Voice mail

Allows you to manually enter the access number for Voice mail Service. This number should be only used when a VMS (Voice mail Service) access number is not provided by the network.

14. Callback

Select **On** to automatically send a designated callback number with your messages. Or, select **Off**.

15. Signature

Select **Custom** to create/edit a signature to automatically send with your messages. Select **None** for no signature.

16. Delivery Receipt

When **Delivery Receipt** is set to **On**, you can see if your sent messages have been delivered. Or select **Off**.

17. TXT-Media Msg Notification

Displays pop-up notification when switching message types between text and media.

Erasing Messages

You can erase messages stored in your Inbox, Sent, or Drafts folders. You can also erase all messages at the same time.

1. Open the phone and press the **OK key** OK MENU.
2. Press 2abc **Messaging**.
3. Press the **Right Select key** Options then select one of the following:

   Erase Inbox/ Erase Sent/ Erase Drafts/ Erase All
4. Press OK Yes to confirm the deletion or select which messages you want to delete.

   A confirmation message is displayed.

Recent Calls

The Recent Calls menu is a list of the last phone numbers or Contact entries for calls you placed, accepted, or missed. It's continually updated as new numbers are added to the beginning of the list and the oldest entries are removed from the bottom of the list.

1. Missed

Allows you to view the list of missed calls; up to 90 entries.

1. Open the phone and press the **OK key** OK MENU.
2. Press 3 def **Recent Calls**.
3. Press 1 **Missed**.
4. Use the **Directional key** to highlight an entry, then
   - Press the **OK key** OK OPEN to open the entry.
   - Press the **SEND key** SEND to place a call to the number.
   - Press the **Right Select key** Options to select:

     Save To Contacts (Contact Info)/ Erase/ Lock(Unlock)/ Erase All/ View Timers
   - Press the **Left Select key** Message to send a message to the number.

2. Received

Allows you to view the list of incoming calls; up to 90 entries.

1. Open the phone and press the **OK key** OK MENU.
2. Press 3 def **Recent Calls**.
3. Press 2 abc **Received**.
4. Use the **Directional key** to highlight an entry, then
   - Press the **OK key** OK OPEN to open the entry.
   - Press the **SEND key** SEND to place a call to the number.
   - Press the **Right Select key** Options to select:

     Save To Contacts (Contact Info)/ Erase/ Lock(Unlock)/ Erase All/ View Timers
   - Press the **Left Select key** Message to send a message to the number.

3. Dialed

Allows you to view the list of outgoing calls; up to 90 entries.

1. Open the phone and press the **OK key** OK MENU.
2. Press 3 def **Recent Calls**.
3. Press 3 def **Dialed**.
4. Use the **Directional key** to highlight an entry, then
   - Press the **OK key** OK OPEN to open the entry.
   - Press the **SEND key** SEND to place a call to the number.
   - Press the **Right Select key** Options to select:

     Save to Contacts(Contact Info)/ Erase/ Lock(Unlock)/ Erase All/ View Timers
   - Press the **Left Select key** Message to send a message to the number.

4. All

Allows you to view the list of all calls; up to 270 entries.

1. Open the phone and press the **OK key** OK MENU.
2. Press 3 def **Recent Calls**.
3. Press 4 ghi **All**.
4. Use the **Directional key** to highlight an entry, then
   - Press the **OK key** OK OPEN to open the entry.
   - Press the **SEND key** SEND to place a call to the number.
   - Press the **Right Select key** Options to select:

     Save to Contacts(Contact Info)/ Erase/ Lock(Unlock)/ Erase All/ View Timers
   - Press the **Left Select key** Message to send a message to the number.

Shortcut To view a quick list of all your recent calls, press the **SEND key** SEND from standby mode.

5. View Timers

Allows you to view the duration of selected call types.

1. Open the phone and press the **OK key** OK MENU.
2. Press 3 def **Recent Calls**.
3. Press 5 jkl **View Timers**.
4. Use the **Directional key** to highlight a call list.

   Last Call/ All Calls/ Received Calls/ Dialed Calls/ Roaming Calls/ Transmit Data/ Received Data/ Total Data/

Last Reset/ Lifetime Calls/ Lifetime Data Counter

5. Press the **Left Select key** Reset to reset the highlighted timer.
6. Reset all the recorded timers by pressing the **Right Select key** Reset All.

NOTE Lifetime Calls and Lifetime Data Counter cannot be reset.

Internet

Allows you to access news, sports, weather, and email from your Verizon Wireless device. Accessibility and selections within this feature are dependent upon your service provider. For specific information on Internet access through your phone, contact your service provider.

Shortcut Pressing the **Left Directional key** is the shortcut to accessing the Browser when the phone is open.

1. Open the phone and press the **OK key** OK MENU.
2. Press 4 **Internet**.

NOTE Refer to the Internet section on the following page for more Browser information.

Media Center

Everything you need to know while you're on the go.

1. Apps

This menu allows you to download apps and access your current apps.

1. Open the phone and press the **OK key** OK MENU.
2. Press 5 jkl **Media Center**.
3. Press 1 **Apps**.
4. Select **SHOP APPS** or highlight an application using the **Directional key**, then press the **OK key** OK.

Backup Assistant

Backup Assistant safeguards your mobile phone's address book and automatically saves a copy of the names, phone numbers, and email addresses stored in your phone. See page 24 for additional details.

Mobile Email

Mobile Email is an application downloadable from the Apps menu. Don't miss an important email. Thanks to Mobile Email, you can get your emails on your phone while you're on the go.

Mobile Email works with many providers, including Yahoo!, AOL, Verizon.net and others. Get alerts from your phone when new email has arrived.

Additional fees may apply.

2. Internet

1. Open the phone and press the **OK key** OK MENU.
2. Press 4 ghi **Internet**.

   OR

   Press 5 jkl **Media Center**, then press 2 abc **Internet**.

Ending a Browser Session

End a Browser session by pressing the **Power/END key**.

Navigating Through the Internet

On-screen items appear in one of the following ways:

- Numbered options

  You can use your numeric keypad or you can select the items by moving the cursor and pressing the appropriate **Select keys**.

- Links embedded in content

  You can act on the options or the links using the **Select keys** just below the display screen.

- Text or numbers

  You can select the items by moving the cursor and pressing the **OK key** OK.

Scrolling

Use the **Directional key**. The browser's cursor will highlight currently selected items.

Fast Scrolling

Press and hold the **Directional key** to quickly move the cursor up and down on the current screen.

Select Keys

To use (if available) special functions press the **Select keys**. The function, associated with the **Select keys** can change for each page and depends on each highlighted item.

Entering Text, Numbers, or Symbols

When prompted to enter text, you can enter text and symbols using the keypad. To enter an upper case character, press *.

To insert a space or symbols, press #.

Deleting Text/Number Entered

When entering text or numbers, press CLR to clear the last number, letter, or symbol.

Initiating a Phone Call From the Internet

You can make a phone call from the Internet if the site you are using supports the feature (the phone number or **Call** can be highlighted). Highlight the link and press the **OK key** OK to place the call. The browser connection is terminated when you initiate the call. After you end the call, your phone returns to the screen from which you initiated the call.

3. Tunes & Tones

Personalize your phone with ringtones. A wide variety of choices are available, such as current hits, pop, hip-hop, and more.

Access and Options

1. Open the phone and press the **OK key** OK MENU.
2. Press 5 **Media Center**.
3. Press 3 **Tunes & Tones**.

4. Select a submenu by pressing the number that corresponds with the submenu.

3.1 My Ringtones

Allows you to select a desired ringtone.

1. Open the phone and press the **OK key** OK MENU.
2. Press 5 jkl **Media Center**.
3. Press 3 def **Tunes & Tones**.
4. Press 1 **My Ringtones**.
5. Use the **Directional key** to highlight a ringtone and press the **OK key** OK PLAY to play the ringtone or the **Left Select key** Set As to set the ringtone as:

- 1 **Ringtone**: Sets the ringtone for your incoming calls
- 2 abc **Contact ID**: Highlight and select the Contact to be identified by the ringtone you selected.
- 3 def **Alert Sounds**: Press the corresponding number key to set the ringtone for one of the following:

  All Messages/ TXT Message/ Multimedia Message/ Voice mail

3.2 My Sounds

Allows you to record a new sound or select a desired sound.

How to record a new sound

1. Open the phone and press the **OK key** OK MENU.
2. Press 5 jkl **Media Center**.
3. Press 3 def **Tunes & Tones**.
4. Press 2 abc **My Sounds**.
5. Press 1 **Record New** and press the **OK key** OK to start recording, then press the **OK key** OK STOP to end recording.

How to select a sound

1. Open the phone and press the **OK key** OK MENU.
2. Press 5 jkl **Media Center**.
3. Press 3 def **Tunes & Tones**.
4. Press 2 abc **My Sounds**.
5. Use the **Directional key** to scroll and highlight a preloaded sound.

Options with a sound file highlighted:

- Press the **Left Select key** Set As to set it as the Ringtone, Contact ID or Alert Sounds.

- Press the **OK key** OK PLAY to preview the sound.
- Press the **Right Select key** Options to select:

  Send/ Via Email/ Rename/ Lock(Unlock)/ Erase/ Erase All/ File Info

4. Pictures

View, take, and trade digital pictures right from your wireless phone.

Access and Options

1. Open the phone and press the **OK key** OK MENU.
2. Press 5 **Media Center.**
3. Press 4 **Pictures.**
4. Browse the submenus.

4.1 My Pictures

Allows you to view and manage photos stored in the phone.

1. Open the phone and press the **OK key** OK MENU.
2. Press 5 **Media Center.**
3. Press 4 **Pictures.**
4. Press 1 **My Pictures.**
5. Highlight a picture with the **Directional key**.

The following options are available:

- Press the **OK key** OK VIEW to view it.
- Press the **Left Select key** Erase to delete it.
- Press the **Right Select key** Options to select one of the following options:

  Send New Message /To Social Network /Via Email /Via Bluetooth

  Set As Wallpaper/ Picture ID

  Take Picture Turns on the camera function.

  Slide Show Plays all pictures as a slide show.

  Manage Pictures Allows you to mark multiple pictures to be erased, sent or locked/ unlocked.

  Rename Allows you to change the file name.

  *Lock (Unlock) Allows you to lock or unlock. Locked files can't be erased accidentally.

  File Info Name/ Date/ Time/ Resolution/ Size

* Only appears when the picture is stored on the phone.

Editing a Picture

Access My Pictures, then use the **Directional key** to highlight a picture. Press the **OK key** VIEW and then press the **Right Select key** Options to access:

Edit Allows you to zoom, rotate and crop the photo.

4.2 Take Picture

Lets you to take digital pictures.

Shortcut Press the Camera key from the Home screen to open the camera function.

1. Open the phone and press the **OK key** MENU.
2. Press 5 **Media Center**.
3. Press 4 **Pictures**.
4. Press 2 **Take Picture**.
5. Set the brightness by pressing the **Directional key** up and down, zoom by pressing the **Directional key** left and right, and press the **Right Select key** Options to change other settings.

NOTE Zooming is not available on the highest resolution.

- Select the option(s) to customize.

RESOLUTION 1280X960/ 640X480/ 320X240

SELF TIMER Off/ 3 Seconds/ 5 Seconds/ 10 Seconds

WHITE BALANCE Auto/ Sunny/ Cloudy/ Fluorescent/ Glow

SHUTTER SOUND Shutter/ No Sound /Say “Cheese”/ Ready! 1 2 3

COLOR EFFECTS Normal/ Negative/ Aqua/ Sepia/ Black&White

NIGHT MODE On/ Off

NOISE REDUCTION On/ Off
Turning this setting on provides improved picture quality in low-lighting shots.

AUTO SAVE On/ Off

PREVIEW Actual view/ Full screen

6. Take a picture by pressing the **OK key** TAKE.
7. Press the **Left Select key** SAVE. The picture is stored in **My Pictures**.

Mobile Email

The Mobile Email menu allows you to set up your email account and conveniently exchange emails wirelessly using your device. To use this feature, you may need to download the application first; read the instructions on your device and follow them.

1. Open the phone and press the **OK key** OK MENU.
2. Press 6 mno **Mobile Email**. Follow the on-screen prompts.

Apps

This menu allows you to download apps and access your current apps.

1. Open the phone and press the **OK key** OK MENU.
2. Press 7 pqrs **Apps**.
3. Refer to page 42 for more information.

My Pictures

Allows you to view and manage the pictures stored in your phone. You can also take new photos and download new pictures.

1. Open the phone and press the **OK key** OK MENU.
2. Press 8 tuv **My Pictures**.
3. Refer to page 45 for more information.

Settings & Tools

1. My Verizon

Check your subscription information ranging from your payment plan to your software upgrade or other available service.

1. Open the phone and press the **OK key** OK MENU.
2. Press 9 wxyz **Settings & Tools**.
3. Press 1 **My Verizon**.

2. Master Volume

Allows you to set the Master Volume settings.

1. Open the phone and press the **OK key** OK MENU.
2. Press 9 wxyz **Settings & Tools**.
3. Press 2 abc **Master Volume**.
4. Adjust the volume with the **Directional key** and press the **OK key** OK SET to save the setting.

3. Accessibility

Allows you to set the Accessibility settings.

1. Open the phone and press the **OK key** OK MENU.
2. Press 9 wxyz **Settings & Tools**.
3. Press 3 def **Accessibility**.

3.1 Readout

Allows you to set various readout settings.

1. Open the phone and press the **OK key** OK MENU.
2. Press 9 wxyz **Settings & Tools**.
3. Press 3 def **Accessibility**.
4. Press 1 **Readout**.

3.1.1 Full Readout

Full Readout reads the screens out loud for blind and low-vision users or when your eyes are busy. To listen to a text message, press the **Speakerphone key**.

3.1.2 Menu Readout

Allows you to set the phone to read out the Menu List or Alert screen.

3.1.3 Digit Dial Readout

Allows you to set the phone to read out the digits entered in the dialing screen.

3.1.4 Caller ID Readout

Allows you to set the phone to read out the caller information.

You can choose one of the following options:

Ring only/ Caller ID + Ring/ Name Repeat

3.1.5 Passwords Readout

Allows you to set the phone to read out the password when you are entering.

3.1.6 Speech Rate

Allows you to set the speech rate. You can choose one of the following options:

Very Fast/ Fast/ Normal/ Slow/ Very Slow

3.2. Invert Color

Allows you to invert the screen color contrast for people with difficulty perceiving colors.

1. Open the phone and press the **OK key** OK MENU.
2. Press 9 wxyz **Settings & Tools**.
3. Press 3 def **Accessibility**.
4. Press 2 abc **Invert Color**.
5. Use the **Directional key** to highlight a setting, then press the **OK key** OK SET.

3.3. Large Text

Allows you to set the text size to large.

1. Open the phone and press the **OK key** OK MENU.
2. Press 9 wxyz **Settings & Tools**.
3. Press 3 def **Accessibility**.
4. Press 3 def **Large Text**.
5. Use the **Directional key** to highlight a setting, then press the **OK key** OK SET.

3.4. Mono Audio

Plays the same sounds to both earpieces so you can hear everything with just one ear.

1. Open the phone and press the **OK key** OK MENU.
2. Press 9 wxyz **Settings & Tools**.
3. Press 3 def **Accessibility**.
4. Press 4 ghi **Mono Audio**.
5. Use the **Directional key** to highlight a setting, then press the **OK key** OK SET.

3.5. Turn Off All Sounds

Allows you to set the phone to turn off all sounds.

1. Open the phone and press the **OK key** OK MENU.
2. Press 9 wxyz **Settings & Tools**.
3. Press 3 def **Accessibility**.
4. Press 5 jkl **Turn Off All Sounds**.
5. Use the **Directional key** to highlight a setting, then press the **OK key** OK SET.

4. Tools

Your phone includes a lot of useful tools.

1. Open the phone and press the **OK key** OK MENU.
2. Press 9 wxyz **Settings & Tools**.
3. Press 4 ghi **Tools**.

4.1 Voice Commands

This feature provides you with the following options equipped with AVR (Advanced Voice Recognition) technology. Each option has its detailed information on the phone and you can check it out by pressing the **Left Select key** Info.

1. Open the phone and press the **OK key** OK MENU.
2. Press 9 wxyz **Settings & Tools**.
3. Press 4 ghi **Tools**.
4. Press 1 **Voice Commands**.

Access and Options

Open the phone and press the Voice Command key CLR on the keypad.

The Voice Commands feature has several settings which allow you to customize how you want to use it. Access Voice Commands, then press the **Right Select key** Settings.

Confirm Choices This settings allows you to choose if the Command System prompts you with a list of potential matches. Choose from **Automatic/ Always Confirm/ Never Confirm.**

Sensitivity Set the sensitivity for potential matches as **More Sensitive/ Automatic/ Less Sensitive.**

Train Voice If the phone often asks you to repeat voice command, train the phone to recognize your voice patterns. Choose from **Train Words/ Train Digits**.

Prompts This setting allows you to select how the voice commands system notifies you and the duration in which you can respond. Choose from **Mode/ Audio Playback/ Timeout.**

- For Mode, set **Prompts/ Readout + Alerts/ Readout/ Tones Only.**
- For Audio Playback, set **Speakerphone** or **Earpiece**.
- For Timeout, set **5 seconds** or **10 seconds**.

CLR key Activation This setting allows you to activate Voice Commands feature with the **Clear/ Voice Commands key** CLR from the standby screen. Choose from **On/ Off.**

By default, the **Clear key** CLR on the keypad activates the Voice Command feature. To deactivate, change the CLR key Activation setting to Off.

4.1.1 Call <Name or Number>

Say "Call" and then call someone simply by saying the name or phone number. Please speak clearly and say the name or number exactly as it is entered in your Contact List. When you have more than one contact number, you can state the name and number type of the contact (for example, 'Call John Work').

4.1.2 Send Msg to <Name or Number or Group>

Say "Send Message" and the command will prompt you for the type of message. After choosing the message type, you will be prompted for the contact name, number or group. It will automatically start a message. If you say a full-sentence command, such as 'Send Message to Bob', it will automatically start a text message without asking for the message type. When using 'Send Message' command, speak clearly and say the name, number or group exactly as it is entered in your Contact List.

4.1.3 Go to <Menu>

The 'Go to' command allows you to access a menu within the phone (for example, 'Go to Calendar').

If no menu option is stated, a list of options will be provided.

4.1.4 Check <Item>

The 'Check' command allows you to check out a wide range of items

such as **Phone Status, Voice mail, Messages, Missed Calls, Time, Signal Strength, Battery Level, Volume, Balance, Minutes, Payment** and **My Number**.

4.1.5 Contacts <Name>

You can look up names in your Contacts (for example, 'Contacts John') as well as manage your Contact List including creating, erasing or modifying.

Call/ Read out/ Create New/ Modify/ Erase

4.1.6 Search

The "Search" command opens the browser and allows you to search for information over the internet.

4.1.7 Redial

Say "Redial" and the phone will redial the last phone number.

4.1.8 My Verizon

The 'My Verizon' command provides you with direct access to your Verizon Wireless account information.

4.1.9 Help

Provides a general guideline to using Voice Commands.

4.2 Calculator

Allows you to perform simple mathematical calculations.

1. Open the phone and press the **OK key** OK MENU.
2. Press 9 wxyz **Settings & Tools**.
3. Press 4 ghi **Tools**.
4. Press 2 abc **Calculator**.
5. Enter the numbers to get the value you want. To clear entered items, press the **Left Select key** – Clear.
6. Use the **Right Select key** – Operators to add other operators.
7. Use the **Directional key** to enter an operation between numbers and press the **OK key** OK = for the result.

NOTE To insert a decimal, press * +. To insert + and -, press # ±.

- Press the **Directional key** Up for + (addition).
- Press the **Directional key** Down for - (subtraction).
- Press the **Directional key** Left for ÷ (division).
- Press the **Directional key** Right for x (multiplication).

4.3 Ez Tip Calculator

Allows you to quickly and easily calculate bill amounts using the bill total, tip % and number of people as variables.

1. Open the phone and press the **OK key** OK MENU.
2. Press 9 wxyz **Settings & Tools**.
3. Press 4 ghi **Tools**.
4. Press 3 def **Ez Tip Calculator**.
5. Enter the variable fields (Total Bill, Tip (%), Split) and the corresponding calculation fields (tip and total for each person) appear automatically.
6. Press the **Left Select key** Reset for another calculation.

4.4 Eco-Calculator

Allows you to keep track of your walking and cycling distances. The amount of CO_2 that is decreased by walking and cycling is displayed for you to see.

1. Open the phone and press the **OK key** OK MENU.
2. Press 9 wxyz **Settings & Tools**.
3. Press 4 ghi **Tools**.
4. Press 4 ghi **Eco-Calculator**.
5. Select the **Walking** or **Cycling** fields to edit the hours and miles.

NOTE The decreasing CO_2 amount is automatically updated when you enter the hour or mile amounts.

6. Press the **Left Select key** Settings to set the following settings.

- **Mode** Allows you to switch the Eco-Calculator home screen animation to **Person** or **Tree**. Depending on what information you entered last (Walking or Cycling) an animation will appear. The number of trees in the animation is calculated depending on the amount of CO_2 decreased.
- **Character** Allows you to change the character to **Man**, **Woman**, or **Man & Woman**. This option is unavailable when Tree is set as the Mode.
- **Unit** Allows you to change the unit amount to **Hour** or **Mile**.
- **My Car** Allows you to select the type of fuel your car uses and the Fuel Efficiency (mpg) of your car to measure the amount of CO_2 discharged.

4.5 Calendar

Allows you to keep your agenda convenient and easy to access. Simply store your appointments and your phone will alert you with a reminder you set.

1. Open the phone and press the **OK key** OK MENU.
2. Press 9 **Settings & Tools**.
3. Press 4 **Tools**.
4. Press 5 **Calendar**.
5. Use the **Directional key** to highlight the scheduled day.

   Left: Previous Day

   Right: Next Day

   Up: Previous Week

   Down: Next Week
6. Press the **Left Select key** Add.
7. Enter the Subject, then scroll down to set the remaining settings.
8. Highlight a Calendar setting field, then press the **Left Select key** Set. For each Calendar event you can set:
   - Start Date
   - Start Time
   - End Date
   - End Time
   - Repeat
   - Until
   - Alerts
   - Tones
   - Vibrate
9. Use the **Directional key** to highlight the setting you want, then press the **OK key** OK.
10. Press the **OK key** OK SAVE when Calendar information is complete.

Editing and Deleting calendar entries

1. From the calendar entry list, press the **OK key** OK VIEW.
2. Press the **OK key** OK EDIT to edit the calendar entry or press the **Left Select key** Erase to delete the calendar entry.

4.6 Alarm Clock

Allows you to set up to 10 alarms. At the alarm time, your alarm will be displayed on the LCD screen and the alarm will sound.

1. Open the phone and press the **OK key** OK MENU.
2. Press 9 **Settings & Tools**.
3. Press 4 **Tools**.
4. Press 6 **Alarm Clock**.
5. Press the **Left Select key** Add.

6. Use the **Directional key** to highlight the information you want to set, then press the **Left Select key** Set to view your setting choices.

Enter the alarm information including:

- Turn On/Off
- Set Time
- Repeat
- Ringtone

7. Press the **OK key** OK SAVE after setting all of the Alarm fields as necessary.

NOTE Snooze or Dismiss the alarm using the **Select keys**.

How to delete alarms

1. From the Alarm Clock list, press the **Right Select key** Options to view the available options.
2. Press 2 abc **Erase** to delete an alarm or 3 def **Erase All** to delete all alarm entries.
3. Press the **OK key** OK Yes.

How to edit alarms

1. From the Alarm Clock list, press the **OK key** OK VIEW and then press the **OK key** OK EDIT.

4.7 Info Search

Allows you to search items stored on the phone.

1. Open the phone and press the **OK key** OK MENU.
2. Press 9 wxyz **Settings & Tools**.
3. Press 4 ghi **Tools**.
4. Press 7 pqrs **Info Search**.
5. Enter two or more characters in the search field and press the **OK key** OK SEARCH.
6. By default, the phone will search all the categories. To specify the categories, highlight All and press the **Left Select key** Set. Use the **Directional key** to highlight a category and press the **OK key** OK MARK to mark/unmark the category. After specifying the categories, press the **Left Select key** DONE.
7. To view a search result, highlight the desired results and press the **OK key** OK VIEW. If you want to retry the search, press the **Right Select key** Retry. If you want to start a new search, press the **Left Select key** Search, enter your key word, then Press the **OK key** OK.

8. If no results are found, you will be prompted to try again. Choose **Yes** to try again or **No** to return to the Tools menu.

4.8 Stopwatch

Allows you to use your phone as a typical stopwatch.

1. Open the phone and press the **OK key** OK MENU.
2. Press 9 wxyz **Settings & Tools**.
3. Press 4 ghi **Tools**.
4. Press 8 tuv **Stopwatch**.
5. Press the **OK key** OK START.
6. While measuring time, press the **Left Select key** Lap to record a lap.
7. Pressing the **OK key** OK STOP will stop or resume Stopwatch time.
8. After time has stopped, press the **Right Select key** Reset.

4.9 World Clock

Allows you to determine the current time in another time zone or country.

1. Open the phone and press the **OK key** OK MENU.
2. Press 9 wxyz **Settings & Tools**.
3. Press 4 ghi **Tools**.
4. Press 9 wxyz **World Clock**.
5. Press the **Right Select key** Cities for a list of available cities.
6. Highlight a city from the list, then press the **OK key** OK.
7. The display shows the position of the city on a global map.
8. Press the **OK key** OK again to zoom in on the city and view its date and time infomation.

NOTE Press the **Left Select key** Set DST, to set daylight saving time. Select **Yes** and press the **OK key** OK to set DST.

4.10 Notepad

Allows you to add, read, edit, and erase notes to yourself.

1. Open the phone and press the **OK key** OK MENU.
2. Press 9 wxyz **Settings & Tools**.
3. Press 4 ghi **Tools**.
4. Select **Notepad**.
5. Press the **Left Select key** Add to write a new note.
6. Press the **Left Select key** to change the entry mode. Or press the **Right Select key** Options to **Copy Text** and

Paste or to **Cancel** the notepad entry.

7. After typing your note, press the **OK key** OK SAVE to save it.

5. Bluetooth® Menu

Your phone is compatible with devices that support the Headset, Handsfree, Phonebook Access, Object Push for vCard and vCalendar, File Transfer, and Message Access profiles.

You may create and store 20 pairings within the phone and connect to one device.

The approximate communication range for Bluetooth® wireless technology is up to 30 feet (10 meters).

NOTE Read the user guide of each Bluetooth® accessory that you are trying to pair with your phone because the instructions may be different.

NOTE Your phone is based on the Bluetooth® specification, but it is not guaranteed to work with all devices enabled with Bluetooth® wireless technology.
Phone does not support ALL Bluetooth® OBEX Profiles.
* For vehicle/accessory compatibility go to www.verizonwireless.com/bluetoothchart

Turn On Bluetooth

Allows you to set the phone's Bluetooth® power On/Off.

1. Open the phone and press the **OK key** OK MENU.
2. Press 9 wxyz **Settings & Tools**.
3. Press 5 jkl **Bluetooth Menu**.
4. Press the **Left Select key** – Turn On.

NOTE By default, your device's Bluetooth® functionality is turned off.

5.1. Add New Device

Pairing is the process that allows the handset to locate, establish, and register 1-to-1 connection with the target device.

For pairing with a new Bluetooth® device

1. Follow the Bluetooth® accessory instructions to set the device to pairing mode.
2. Open the phone and press the **OK key** OK MENU.
3. Press 9 wxyz **Settings & Tools**.
4. Press 5 jkl **Bluetooth Menu**.
5. Press 1 **Add New Device**.
6. Set the desired device to discovery mode.

7. The device will appear in Add New Device menu once it has been located. Highlight the device and press the **OK key** OK PAIR.
8. The handset will prompt you for the passcode. Consult the Bluetooth® accessory instructions for the appropriate passcode (typically "0000" - 4 zeroes). Enter the passcode and press the **OK key** OK.
   When Auto Pair Handsfree is set to On, the device will try to autopair for headsets.
9. When pairing is successful, highlight either **Always Ask** or **Always Connect** and press the **OK key** OK to connect with the device.
10. Once connected, you will see the device listed in the Bluetooth® Menu and when the pair is transferring information the Bluetooth® indicator will show up on your screen.

Icon Reference in Adding New Device

When the Bluetooth® wireless connection is built and paired devices are found, the following icons are displayed.

Icon References When a Bluetooth® Wireless Connection is Searched (neither connected nor paired).

	When a carkit device is found by your device
	When an audio device is found by your device
	When a PC is found by your device
	When a PDA is found by your device
	When another phone device is found by your device
	When a printer is found by your device
	When other undefined devices are found by your device

Icon References When Successfully Connected

The following options are available in the paired device.

1. **Remove Device**: You can remove the device from the pairing list.
2. **Rename Device**: You can rename the paired device.
3. **Incoming Security**: Allows you to set permission before connecting an incoming device.

4. **Service Discovery**: Allows you to search for the services that the selected device supports.
5. **Device Info**: Shows the device information.

NOTES While in the Bluetooth Menu, you can turn the Bluetooth functionality off by pressing the **Left Select key** Turn Off. Reversely, you can turn it on by pressing the **Left Select key** Turn On again.
When connected with a Phone or PC supporting OPP, the following menus are possible:

- Send Name Card: Allows my contact data to send other device up to 1000 Contacts.
- Get Name Card: Allows you to pull name card of other device.
- Exchange Name Card: Allows you to exchange the handset's name card with other device.
- Send Calendar Event: Allows you to send Calendar events to other devices.
- Send Picture: Allows you to send pictures to other devices.

My Phone Info

Allows you to view and/or edit the name of the Bluetooth® device.

1. Open the phone and press the **OK key** OK MENU.
2. Press 9 **Settings & Tools**.
3. Press 5 **Bluetooth Menu**.
4. Press the **Right Select key** Options.
5. Press 1 **My Phone Info**.
6. Press CLR to clear the existing name.
7. Use the keypad to enter a new custom name.
8. Press the **OK key** OK to save and exit.

Discovery Mode

Allows you to set whether your device is able to be discovered/found by other Bluetooth® devices in the area.

1. Open the phone and press the **OK key** OK MENU.
2. Press 9 **Settings & Tools**.
3. Press 5 **Bluetooth Menu**.
4. Press the **Right Select key** Options.
5. Press 2 **Discovery Mode**.
6. Use the **Directional key** to highlight a setting, then press the **OK key** OK SET.

NOTE If you choose On for Discovery Mode, your device is able to be searched by other in-range Bluetooth® devices.

Supported Profiles

Allows you to see profiles that your phone can support.

1. Open the phone and press the **OK key** OK MENU.
2. Press 9 wxyz **Settings & Tools**.
3. Press 5 jkl **Bluetooth Menu**.
4. Press the **Right Select key** Options.
5. Press 3 def **Supported Profiles**.
6. Press the **OK key** OK VIEW to view information about the different profiles supported.

6. Sounds Settings

Provides options to customize the phone's sounds.

6.1 Easy Set-up

Allows you to quickly set the main Sounds Settings for keypad volume, incoming calls and messages (text, multimedia, and Voice mail).

1. Open the phone and press the **OK key** OK MENU.
2. Press 9 wxyz **Settings & Tools**.
3. Press 6 mno **Sounds Settings**.
4. Press 1 **Easy Set-up**.
5. Read each setting description. Press the **Right Select key** Skip to go to the next menu item. Press the **Left Select key** Play to listen to the volume setting. Highlight the setting you want, then press the **OK key** OK SET.

NOTE Set each alert separately with Ring Only, Vibrate Only, Ring and Vibrate, and Be Silent.

6.2 Call Sounds

Allows you to set how the phone alerts you for types of incoming calls.

1. Open the phone and press the **OK key** OK MENU.
2. Press 9 wxyz **Settings & Tools**.
3. Press 6 mno **Sounds Settings**.
4. Press 2 abc **Call Sounds**.

6.2.1 Call Ringtone

This menu allows you to set a ringtone for incoming calls.

TIP To hear a ringtone before you set it, press the **Left Select key** Play.

6.2.2 Call Vibrate

This menu allows you to set the phone to vibrate when receiving incoming calls.

6.2.3 Caller ID Readout

This menu allows you to set the phone to read out caller ID information or just ring for incoming calls.

6.3 Alert Sounds

Allows you to select the alert type sounds.

1. Open the phone and press the **OK key** OK MENU.
2. Press 9 wxyz **Settings & Tools**.
3. Press 6 mno **Sounds Settings**.
4. Press 3 def **Alert Sounds**.
5. Select **TXT Message/ Multimedia Message/ Voice mail/ Emergency Tone/ Missed Call**
6. The Alert Sounds menu has these options:
   Tone/ Vibrate/ Reminder
   The exception for this is the Emergency Tone menu. This menu has these options:
   Alert/ Vibrate/ Off

6.4 Keypad Volume

Allows you to set the keypad volume.

1. Open the phone and press the **OK key** OK MENU.
2. Press 9 wxyz **Settings & Tools**.
3. Press 6 mno **Sounds Settings**.
4. Press 4 ghi **Keypad Volume**.
5. Adjust the volume with the **Directional key** and press the **OK key** OK SET to save the setting.

6.5 Service Alerts

Allows you to set any of the five Alert options to either On or Off.

1. Open the phone and press the **OK key** OK MENU.
2. Press 9 wxyz **Settings & Tools**.
3. Press 6 mno **Sounds Settings**.
4. Press 5 jkl **Service Alerts**.
5. Select an alert option.

   ERI (Enhanced Roaming Indicator) Alerts you to the status of cellular service.

   Minute Beep Alerts you 10 seconds before the end of every minute during a call.

   Call Connect Alerts you when the call is connected.

   Charge Complete Alerts you when the battery is completely charged.

Software Update Alerts you of an OTA software update to the device.

6. Use the **Directional key** to highlight a setting, then press the **OK key** OK SET.

NOTE When highlighting On, you can play the alert option by pressing the **Left Select key** Play.

6.6 Hearing Assist

Allows you to set the phone to automatically adapt to noisy environments by adjusting the listening level and improving speech intelligibility.

NOTE The Hearing Assist feature is automatically disabled when you use the speakerphone or the hands-free devices.

1. Open the phone and press the **OK key** OK MENU.
2. Press 9 wxyz **Settings & Tools**.
3. Press 6 mno **Sounds Settings**.
4. Press 6 mno **Hearing Assist**.
5. Use the **Directional key** to highlight a setting, then press OK SET.

7. Display Settings

Provides options to customize the phone's display screen.

1. Open the phone and press the **OK key** OK MENU.
2. Press 9 wxyz **Settings & Tools**.
3. Press 7 pqrs **Display Settings**.

7.1 Easy Set-up

Allows you quickly set the main Display Settings.

1. Open the phone and press the **OK key** OK MENU.
2. Press 9 wxyz **Settings & Tools**.
3. Press 7 pqrs **Display Settings**.
4. Press 1 **Easy Set-up**.

   Customize the following display settings:

- **PERSONAL BANNER**

  Allows you to enter a string of up to18 characters which displays on the screen.

- **DISPLAY BACKLIGHT**

  Set Backlight duration for the Main screen.

  7 Seconds/ 15 Seconds/ 30 Seconds/ Always On/ Always Off

- **KEYPAD BACKLIGHT**

  Set Backlight duration for keypad.

- **7 Seconds/ 15 Seconds/ 30 Seconds/ Always On/ Always Off**

- **WALLPAPER**

  Allows you to set the wallpaper for your phone.

- **DISPLAY THEMES**

  Select your device Display Theme.

  Green Amethyst/ Simple Basic

- **MENU LAYOUT**

  Select your Main Menu Layout.

  List/ Grid/ Tab

- **FONT SIZE**

  When resizable is set, you can use the side up and down keys to adjust the font size.

  Dial Digits/ Menu & List/ Message

- **CLOCK FORMAT**

  Select the format of the Clock Format.

  Analog/ Digital 12/ Large Digital 12/ Digital 24/ Large Digital 24/ Dual City/ Off

5. Read each setting description, highlight the setting you want, then press the **OK key** OK SET. When finished, press the **Right Select key** Done.

7.2 Banner

Allows you to enter a string of up to 18 characters which displays on the LCD screen.

1. Open the phone and press the **OK key** OK MENU.
2. Press 9 wxyz **Settings & Tools**.
3. Press 7 pqrs **Display Settings**.
4. Press 2 abc **Banner**.

7.2.1 Personal Banner

This menu allows you to enter a personal banner that is displayed on the home screen.

NOTE Press the **Directional key** to change the color of the text. Use the **Directional key** to select the color you want.

7.2.2 ERI Banner

If you use ERI Service, ERI Text is shown on the sub banner.

7.3 Backlight

Allows you to set the duration for illuminating the backlight for the main display, front display, and keypad. Each is set separately.

1. Open the phone and press the **OK key** OK MENU.
2. Press 9 wxyz **Settings & Tools**.
3. Press 7 pqrs **Display Settings**.
4. Press 3 def **Backlight**.
5. Highlight a Backlight submenu and press the **OK key** OK.
   - **Display Backlight**: 7 Seconds/ 15 Seconds/ 30 Seconds/ Always On/ Always Off
   - **Keypad Backlight**: 7 Seconds/ 15 Seconds/ 30 Seconds/ Always On/ Always Off

7.4 Brightness

Allows you to set the backlight levels.

1. Open the phone and press the **OK key** OK MENU.
2. Press 9 wxyz **Settings & Tools**.
3. Press 7 pqrs **Display Settings**.
4. Press 4 ghi **Brightness**.
5. Use the **Directional key** to highlight a setting, then press OK SET.

NOTE Brightness level can be 1 to 7.

7.5 Wallpaper

Allows you to choose the kind of background to be displayed on the phone's LCD in standby mode.

1. Open the phone and press the **OK key** OK MENU.
2. Press 9 wxyz **Settings & Tools**.
3. Press 7 pqrs **Display Settings**.
4. Press 5 jkl **Wallpaper**.
5. Highlight a Wallpaper submenu and press the **OK key** OK.

   My Pictures/ Fun Animations/ Slide Show
6. Highlight the desired wallpaper and press OK SET to set.

7.6 Display Themes

Allows you to choose between the different themes for the phone's menus.

1. Open the phone and press the **OK key** OK MENU.
2. Press 9 wxyz **Settings & Tools**.
3. Press 7 pqrs **Display Settings**.
4. Press 6 mno **Display Themes**.

5. Use the **Directional key** to highlight a setting, then press OK SET.

   Green Amethyst/ Simple Basic

NOTE Press the **Left Select key** Preview to preview the selected display theme. Default setting is Green Amethyst.

7.7 Main Menu Settings

Allows you to choose how the Main Menu displays for menu selection.

1. Open the phone and press the **OK key** OK MENU.
2. Press 9 wxyz **Settings & Tools**.
3. Press 7 pqrs **Display Settings**.
4. Press 7 pqrs **Main Menu Settings**.
5. Use the **Directional key** to highlight a setting, then press the **OK key** OK.
   - **Menu Layout**
     List/ Grid/ Tab
   - **Replace Menu Items**
     Select the item you want to replace then press the **OK key** OK EDIT. Select in the list the item you want to replace it with, then press the **OK key** OK SET.
   - **Position Menu Items**
     Select the item you want to move, then press the **OK key** OK MOVE. Move highlight to desired position by pressing the **Directional keys**, then press the **OK key** OK SET.
   - **Reset Menu Settings**
     Menu Layout/ Menu Items/ Item Positions/ All

NOTE This User Guide gives navigation instructions according to the default "List" Main Menu Layout in the Display Settings menu. If other menus are set, navigating the phone's menus may be different.

NOTE Press the **Left Select key** Preview to preview the selected menu setting.

7.8 Font Type

Allows you to set the font type.

1. Open the phone and press the **OK key** OK MENU.
2. Press 9 wxyz **Settings & Tools**.
3. Press 7 pqrs **Display Settings**.
4. Press 8 tuv **Font Type**.
5. Use the **Directional key** to highlight a setting, then press the **OK key** OK SET.

   VZW Font/ LG Secret/ LG Mint

NOTE Press the **Left Select key** Preview to preview the selected font type.

7.9 Font Size

Allows you to set the font size for Dial Digits, Menu & List and Message. Plus, the Volume key Resize setting allows you to use the side Volume keys to instantly scale screen fonts. This setting is helpful for those who need the text to display a little bit larger.

1. Open the phone and press the **OK key** OK MENU.
2. Press 9 wxyz **Settings & Tools**.
3. Press 7 pqrs **Display Settings**.
4. Press 9 wxyz **Font Size**.
5. Use the **Directional key** to highlight **Dial Digits/ Menu & List/ Message.**
6. Use the **Directional key** to highlight a setting, then press the **OK key** OK SET.

   Dial Digits: **Resizable/ Small/ Normal/ Large**

   Menu & Lists: **Resizable/ Small/ Normal/ Large**

   Message: **Resizable/ Small/ Normal/ Large**

NOTE Press the **Left Select key** Preview to preview the selected font size.

7.10 Clock Format

Allows you to choose the kind of clock to be displayed on the front and main LCD screens.

1. Open the phone and press the **OK key** OK MENU.
2. Press 9 wxyz **Settings & Tools**.
3. Press 7 pqrs **Display Settings**.
4. Select **Clock Format**.
5. Use the **Directional key** to highlight a setting, then press OK SET.

   Analog/ Digital 12/ Large Digital 12/ Digital 24/ Large Digital 24/ Dual City/ Off

NOTE Press the **Left Select key** Preview to preview the selected clock format.

8. Phone Settings

The Phone Settings menu allows you to designate specific settings to customize how you use your phone.

8.1 Airplane Mode

Turning on Airplane Mode will disable all wireless communications.

1. Open the phone and press the **OK key** OK MENU.

2. Press 9 wxyz **Settings & Tools**.
3. Press 8 tuv **Phone Settings**.
4. Press 1 **Airplane Mode**.
5. Use the **Directional key** to highlight a setting, then press OK SET.

8.2 Set Shortcut Keys

Allows you to set shortcuts to phone menus using the down, up, left and right **Directional keys**.

8.2.1 Set My Shortcuts

NOTE To access these shortcuts, press the **Directional key** from standby mode (by default) to display My Shortcuts.

1. Open the phone and press the **OK key** OK MENU.
2. Press 9 wxyz **Settings & Tools**.
3. Press 8 tuv **Phone Settings**.
4. Press 2 abc **Set Shortcut Keys**
5. Press 1 **Set My Shortcuts**.
6. Use the **Directional key** to highlight a shortcut key you want to set.

   Shortcut 1/ Shortcut 2/ Shortcut 3/ Shortcut 4
7. Press OK SET to display the available shortcuts. Use the **Directional key** to highlight one, then press OK SET.

8.2.2 Set Directional Keys

NOTE To access these shortcuts open the phone, then press the **Directional key** in the direction (up, down, left) set from standby mode for the Shortcut you want to access.

1. Open the phone and press the **OK key** OK MENU.
2. Press 9 wxyz **Settings & Tools**.
3. Press 8 tuv **Phone Settings**.
4. Press 2 abc **Set Shortcut Keys**
5. Press 2 abc **Set Directional Keys**.
6. Use the **Directional key** to highlight a shortcut key you want to set.

   Up Directional Key/ Left Directional Key/ Down Directional Key
7. Press OK SET to display the available shortcuts. Use the **Directional key** to highlight one, then press OK SET.

8.3 Voice Commands

Please refer to page 50 for details.

8.4 Language

Allows you to set the Multi-language (English, Spanish,Chinese, Korean) feature according to your preference.

1. Open the phone and press the **OK key** OK MENU.
2. Press 9 wxyz **Settings & Tools**.
3. Press 8 tuv **Phone Settings**.
4. Press 4 ghi **Language**.
5. Use the **Directional key** to highlight a setting, then press OK SET.

   English/ Español/Simplified Chinese/ Korean.

8.5 Location

Allows you to set GPS (Global Positioning System: Satellite assisted location information system) mode.

1. Open the phone and press the **OK key** OK MENU.
2. Press 9 wxyz **Settings & Tools**.
3. Press 8 tuv **Phone Settings**.
4. Press 5 jkl **Location**.
5. Use the **Directional key** to highlight a setting, then press OK SET.

   Location On/ E911 Only

NOTES

- GPS satellite signals are not always received by the phone, especially under bad atmospheric and environmental conditions, indoors, etc.
- When a Location Setting Restriction is activated in the Security Menu, the lock code is required when you enter location menu. The lock code is the same 4 digits you use as your device lock code; initially the last 4 digits of your phone number.
- When in Airplane Mode, services supporting Location On functionality will be suspended.

8.6 Security

The Security menu allows you to secure the phone electronically.

1. Open the phone and press the **OK key** OK MENU.
2. Press 9 wxyz **Settings & Tools**.
3. Press 8 tuv **Phone Settings**.
4. Press 6 mno **Security**.
5. Enter the four-digit lock code.

   The lock code is the last 4 digits of your mobile phone number if it is set. The lock code is the last 4 digits of your MEID if your mobile phone number is not set.

8.6.1 Edit Codes

Allows you to enter a new four-digit lock code.

1. Open the phone and press the **OK key** OK MENU.
2. Press 9 wxyz **Settings & Tools**.

3. Press 8 tuv **Phone Settings**.
4. Press 6 mno **Security**.
5. Enter the four-digit lock code.
6. Press 1 **Edit Codes**.
7. Select **Phone Only** or **Calls & Services**.
8. Enter your new four-digit lock code.
9. For confirmation, it will ask you to enter the new lock code again.

8.6.2 Restrictions

Allows you to set separate restrictions for Location Setting, Calls and Messages.

1. Open the phone and press the **OK key** OK MENU.
2. Press 9 wxyz **Settings & Tools**.
3. Press 8 tuv **Phone Settings**.
4. Press 6 mno **Security**.
5. Enter the four-digit lock code.
6. Press 2 abc **Restrictions**.
7. Enter the four-digit service code.
8. Select a Restrictions menu then press OK.

   Location Setting/ Calls/ Messages
9. Use the **Directional key** to highlight the restriction then press OK.

   Location Setting Lock Setting/ Unlock Setting

   Calls: Incoming Calls Allow All / Contacts Only / Block All

   Calls: Outgoing Calls Allow All / Contacts Only / Block All

   Messages: Incoming Messages Allow All / Block All

   Messages: Outgoing Messages Allow All / Block All

8.6.3 Phone Lock Setting

Keeps your phone from unauthorized use. Once the phone is locked, it's in restricted mode until the lock code is entered. You can still receive phone calls and make emergency calls. You can modify the lock code using Edit Codes submenu within the Security menu.

1. Open the phone and press the **OK key** OK MENU.
2. Press 9 wxyz **Settings & Tools**.
3. Press 8 tuv **Phone Settings**.
4. Press 6 mno **Security**.
5. Enter the four-digit lock code.
6. Press 3 def **Phone Lock Setting**.

7. Highlight an option and press OK SET.

   Unlocked The phone remains unlocked, by default.

   On Power Up The phone is locked when it is turned on.

8.6.4 Lock Phone Now

This settings allows you to lock the phone immediately.

NOTE To unlock the phone from standby mode, press the **Right Select key** **Unlock** and enter the four-digit lock code.

8.6.5 Reset Default

Allows you to reset your phone to the factory default settings.

1. Open the phone and press the **OK key** OK MENU.
2. Press 9 wxyz **Settings & Tools**.
3. Press 8 tuv **Phone Settings**.
4. Press 6 mno **Security**.
5. Enter the four-digit lock code.
6. Press 5 jkl **Reset Default**.
7. Press OK after reading the warning message.
8. Highlight **Revert** and press OK.

   A confirmation message is displayed briefly before the phone resets itself.

8.6.6 Restore Phone

Allows you to erase all user data and Contact information you've entered in the phone's memory so it's as if it just left the factory.

1. Open the phone and press the **OK key** OK MENU.
2. Press 9 wxyz **Settings & Tools**.
3. Press 8 tuv **Phone Settings**.
4. Press 6 mno **Security**.
5. Enter the four-digit lock code.
6. Press 6 mno **Restore Phone**.
7. Press OK after reading the warning message.
8. Enter the four-digit lock code.

8.7 System Select

Allows you to set up the phone management environment. Leave this setting as the default unless you want to alter system selection as instructed by your service provider.

1. Open the phone and press the **OK key** OK MENU.
2. Press 9 wxyz **Settings & Tools**.
3. Press 8 tuv **Phone Settings**.
4. Press 7 pqrs **System Select**.

5. Use the **Directional key** to highlight a setting, then press OK SET.

   Home Only/ Automatic A/ Automatic B

8.8 NAM Select

Allows you to select the phone's NAM (Number Assignment Module) if the phone is registered with multiple service providers.

1. Open the phone and press the **OK key** OK MENU.
2. Press 9 **Settings & Tools**.
3. Press 8 **Phone Settings**.
4. Press 8 **NAM Select**.
5. Use the **Directional key** to highlight a setting, then press OK SET.

   NAM1/ NAM2

8.9 Data Roaming Access

Allows you to use data connections when you are roaming.

1. Open the phone and press the **OK key** OK MENU.
2. Press 9 **Settings & Tools**.
3. Press 8 **Phone Settings**.
4. Press 9 **Data Roaming Access**.
5. Use the **Directional key** to highlight a setting, then press OK SET.

   Deny data roaming access / Allow access only for this trip / Allow access for all trips

9. Call Settings

The Call Settings menu allows you to designate how the phone handles both incoming and outgoing calls.

9.1 Answer Options

Allows you to determine how the phone will answer an incoming call.

1. Open the phone and press the **OK key** OK MENU.
2. Press 9 **Settings & Tools**.
3. Press 9 **Call Settings**.
4. Press 1 **Answer Options**.
5. Use the **Directional key** to to select the setting(s) you want to use, then press OK MARK.

   Flip Open/ Any Key/ Auto with Handsfree

6. Press the **Left Select key** Done when you have marked the setting(s) you want.

NOTE Auto with Handsfree is available when any external device is connected to your phone or speaker is set to on.

9.2 Call Forwarding

Allows an incoming call to be redirected to a mobile telephone or other telephone number.

1. Open the phone and press the **OK key** OK MENU.
2. Press 9 wxyz **Settings & Tools**.
3. Press 9 wxyz **Call Settings**.
4. Press 2 abc **Call Forwarding**.
5. Use the **Directional key** to highlight either **Forward Call** or **Cancel Forwarding**, then press OK.
6. After selecting Forward Call, enter the number to forward to and press OK FWD. To cancel forwarding, select **Cancel Forwarding**.

9.3 Auto Retry

Allows you to set the length of time the phone waits before automatically redialing a number when the attempted call fails.

1. Open the phone and press the **OK key** OK MENU.
2. Press 9 wxyz **Settings & Tools**.
3. Press 9 wxyz **Call Settings**.
4. Press 3 def **Auto Retry**.
5. Use the **Directional key** to highlight a setting, then pres OK SET.

   Off/ Every 10 Seconds/ Every 30 Seconds/ Every 60 Seconds

9.4 TTY Mode

Allows you to attach a TTY device enabling you to communicate with parties also using a TTY device. A phone with TTY support is able to translate typed characters to voice. Voice can also be translated into characters and then displayed on the TTY.

1. Open the phone and press the **OK key** OK MENU.
2. Press 9 wxyz **Settings & Tools**.
3. Press 9 wxyz **Call Settings**.
4. Press 4 ghi **TTY Mode**.
5. An explanation message is displayed.
6. Press OK to continue.
7. Use the **Directional key** to highlight a setting, then press OK SET.

   TTY Full: Users who cannot talk or hear send and receive

a text message through TTY equipment.

TTY + Talk: Users who can talk but cannot hear receive a text message and send voice through TTY equipment.

TTY + Hear: Users who can hear but cannot talk send a text message and receive voice through TTY equipment.

TTY Off: Users send and receive without TTY equipment.

Connecting TTY Equipment and a Terminal

1. Connect a TTY cable to TTY connection on the terminal (TTY connection location is the same as a headset jack).
2. Enter the phone menu and set the desired TTY mode.
3. After setting a TTY mode, check the LCD screen of the phone for the TTY icon.
4. Connect the TTY equipment to the power source and turn it on.
5. Make a phone connection to the desired number.
6. When connection is made, use the TTY equipment to type in and send a text message or send voice.
7. The voice or text message from the receiver end displays on the TTY equipment display.

TTY Mode (Tele Type writer)

Menu	User	Menu	Transmission/ Receiving Mode	When making communications with a non-TTY terminal
TTY Full	For hearing-/ verbally-impaired		Text message transmission, text message receiving	Operator required
TTY + Talk	For hearing-impaired	Able to talk	Voice transmission, text message receiving	Operator required
TTY + Hear	For verbally-impaired	Audible	Text message transmission, voice receiving	Operator required
TTY Off			Voice transmission, voice receiving	

9.5 One Touch Dial

Allows you to initiate a speed dial call by pressing and holding the speed dial digit. If set to Off, Speed Dial numbers designated in your Contacts will not function.

1. Open the phone and press the **OK key** OK MENU.
2. Press 9 wxyz **Settings & Tools**.
3. Press 9 wxyz **Call Settings**.
4. Press 5 jkl **One Touch Dial**.
5. Use the **Directional key** to highlight a setting, then press the **OK key** OK SET.

9.6 Voice Privacy

Allows you to set the voice privacy feature for CDMA calls. CDMA offers inherent voice privacy. Check with your service provider for availability.

1. Open the phone and press the **OK key** OK MENU.
2. Press 9 wxyz **Settings & Tools**.
3. Press 9 wxyz **Call Settings**.
4. Press 6 mno **Voice Privacy**.
5. Use the **Directional key** to highlight a setting, then press the **OK key** OK SET.

9.7 DTMF Tones

Allows you to set the DTMF tone length.

1. Open the phone and press the **OK key** OK MENU.
2. Press 9 wxyz **Settings & Tools**.
3. Press 9 wxyz **Call Settings**.
4. Press 7 pqrs **DTMF Tones**.
5. Use the **Directional key** to highlight a setting, then press the **OK key** OK SET.

   Normal/ Long

9.8 Assisted Dialing

Supports easy dialing on international calls while traveling in non-U.S. roaming region. If set to On, Assisted Dialing is displayed in calling screen.

1. Open the phone and press the **OK key** OK MENU.
2. Press 9 wxyz **Settings & Tools**.
3. Press 9 wxyz **Call Settings**.
4. Press 8 tuv **Assisted Dialing**.
5. Use the **Directional key** to highlight a setting, then press the **OK key** OK SET.
6. Highlight **Reference Country** and press the **Left Select key** Set to select country.

7. Use the **Directional key** to scroll to the desired country.
8. Press the **Left Select key** Details to edit and save the Country Code, IDD Prefix (International Direct Dial), NDD Prefix(National Direct Dial), Area/City Code and Length (Length of Phone Number), then press the **OK key** SAVE to set.
9. Press the **OK key** to set.

NOTE For example, if you make a call from China to U.S when assisted dialing option is on (Reference Country is set to 'U.S.A'), '+' code will be automatically replaced by the matched IDD prefix of China.

10. Memory

Allows you to check your internal phone memory. Shows the memory information saved in your phone.

1. Open the phone and press the **OK key** MENU.
2. Press **Settings & Tools**.
3. Select **10. Memory**.
4. Use the **Directional key** to select file storage type in the phone, then press to view the memory used.

Memory Usage/ My Pictures/ My Ringtones/ My Sounds/ My Contacts

11. Phone Info

Allows you to view the information specific to your phone and software.

1. Open the phone and press the **OK key** MENU.
2. Press **Settings & Tools**.
3. Select **11. Phone Info**.

11.1 My Number

Allows you to view your phone number.

11.2 SW/HW Version

Allows you to view the versions of various applications such as SW, PRL, ERI, Browser, Media Center, AVR, EMS, MMS, Bluetooth®, OTADM Version, MSUI, HW Version, MEID, Warranty Date Code and Operating System.

11.3 Icon Glossary

Allows you to view all the icons and their meanings.

11.4 Software Update

This feature gives your phone the ability to upgrade to the latest software and keeps your phone operating with the latest features without visiting a Verizon Wireless Communications Store for the upgrade. You can either be notified automatically that there is an updated version of software available for your phone, or you can manually check to see if there are any updates available for you to download.

Automatic Update

Your phone will receive a notification that there is an updated version of software available to be downloaded. You can press the **OK key** OK when notified that a download is available or it can happen automatically. Once the download is complete you may, depending on the nature of the update, have three options available: Accept the update, Defer the update, or Reject the update.

NOTE During the update you cannot make or receive phone calls, including 911 calls, or text messages.

Manual Update

1. Open the phone and press the **OK key** OK MENU.
2. Press 9 wxyz **Settings & Tools**.
3. Select **11. Phone Info**.
4. Press 4 ghi **Software Update**.

   The two options shown will be Status and Check New.

   Press 1 **Status** to see the status of a download or update and see information on the last successful update. If updates have not yet been performed, status information will be unavailable.

   Press 2 abc **Check New** to check if any new software updates are available to download. If a newer software version is available, it will automatically begin downloading after 30 seconds or you can begin the download immediately by pressing the **OK key** OK.

12. Set-up Wizard

Allows you to quickly set the font size, call sounds, display themes, menu layout or clock format.

1. Open the phone and press the **OK key** OK MENU.
2. Press 9 wxyz **Settings & Tools**.
3. Select **12. Set-up Wizard**.
4. Use the **Directional key** to scroll to a setting, then press the **OK key** OK SET.

NOTE If you don't want to change the setting, press the **Right Select key** Skip to go to the next setting.

- **FONT SIZE**

  When you view menus and lists, you can adjust the font size using the Volume keys.

- **CALL SOUNDS**

  Ring Only/ Vibrate Only/ Ring and Vibrate/ Be Silent

- **DISPLAY THEMES**

  Green Amethyst/ Simple Basic

- **MENU LAYOUT**

  List/ Grid/ Tab

- **CLOCK FORMAT**

  Select the format of the Clock Format. Analog/ Digital 12/ Large Digital 12/ Digital 24/ Large Digital 24/ Dual City / Off

- Press the **Right Select key** Done to complete set-up.

Important Safety Precautions

Read these instructions. Breaking the rules may be dangerous or illegal. Further detailed information is given in this user guide.

⚠Warning Violation of the instructions may cause serious injury or death.

WARNING: This product contains chemicals known to the State of California to cause cancer and birth defects or other reproductive harm.
Call (800) 243-0000 for more information.
Wash hands after handling.

- Never use an unapproved battery since this could damage the phone and/or battery and could cause the battery to explode.

- Never place your phone in a microwave oven as it will cause the battery to explode.

- Do not dispose of your battery by fire or with hazardous or flammable materials.

- When riding in a car, do not leave your phone or set up the hands-free kit near to the air bag. If wireless equipment is improperly installed and the air bag is deployed, you may be seriously injured.

- Do not use the phone in areas where its use is prohibited. (For example: aircraft)

- Do not expose the battery charger or adapter to direct sunlight or use it in places with high humidity, such as a bathroom.

- Do not use harsh chemicals (such as alcohol, benzene, thinners, etc.) or detergents to clean your phone. This could cause a fire.

- Do not drop, strike, or shake your phone severely. It may harm the internal circuit boards of the phone.

- Do not use your phone in high explosive areas as the phone may generate sparks.

- Do not damage the power cord by bending, twisting, pulling, or heating. Do not use the plug if it is loose as it may cause electric shock or fire.
- Do not place any heavy items on the power cord. Do not allow the power cord to be crimped as it may cause electric shock or fire.
- Do not handle the phone with wet hands while it is being charged. It may cause an electric shock or seriously damage your phone.

- Do not disassemble the phone.
- Do not place or answer calls while charging the phone as it may short-circuit the phone and/or cause electric shock or fire.

- Make sure that no sharp-edged items such as animal's teeth or nails, come into contact with the battery. This could cause a fire.
- Store the battery out of reach of children.

- Be careful that children do not swallow any parts (such as earphone, connection parts of the phone, etc.) This could cause asphyxiation or suffocation resulting in serious injury or death.

- Unplug the power cord and charger during lightning storms to avoid electric shock or fire.

- Only use the batteries and chargers provided by LG. The warranty will not be applied to products provided by other suppliers.
- Only authorized personnel should service the phone and its accessories. Faulty installation or service may result in accidents and consequently invalidate the warranty.

- An emergency call can be made only within a service area. For an emergency call, make sure that you are within a service area and that the phone is turned on.
- Your phone is an electronic device that generates heat during normal operation. Extremely prolonged, direct skin contact in the absence of adequate ventilation may result in discomfort or minor burns. Therefore, use care when handling your phone during or immediately after operation.
- Use and store your phone in temperatures between 0˚C/32˚F and 45˚C/113˚F, if possible. Exposing your phone to extremely low or high temperatures may result in damage, malfunction, or even explosion.

HAC

This phone has been tested and rated for use with hearing aids for some of the wireless technologies that it uses. However, there may be some newer wireless technologies used in this phone that have not been tested yet for use with hearing aids. It is important to try the different features of this phone thoroughly and in different locations, using your hearing aid or cochlear implant, to determine if you hear any interfering noise. Consult your service provider or the manufacturer of this phone for information on hearing aid compatibility. If you have questions about return or exchange policies, consult your service provider or phone retailer.

FCC RF Exposure Information

WARNING! Read this information before operating the phone.

In August 1996, the Federal Communications Commission (FCC) of the United States, with its action in Report and Order FCC 96-326, adopted an updated safety standard for human exposure to Radio Frequency (RF) electromagnetic energy emitted by FCC regulated transmitters. Those guidelines are consistent with the safety standard previously set by both U.S. and international standards bodies. The design of this phone complies with the FCC guidelines and these international standards.

Bodily Contact During Operation

This device was tested for typical use with the back of the phone kept 0.59 inches (1.5 cm) from the body. To comply with FCC RF exposure requirements, a minimum separation distance of 0.59 inches (1.5 cm) must be maintained between the user's body and the back of the phone. Third-party belt-clips, holsters, and similar accessories containing metallic components may not be used. Avoid the use of accessories that cannot maintain 0.59 inches (1.5 cm) distance between the user's body and the back of the phone and have not been tested for compliance with FCC RF exposure limits.

Caution

Use only the supplied antenna. Use of unauthorized antennas (or modifications to the antenna) could impair call quality, damage the phone, void your warranty and/or violate FCC regulations.

Don't use the phone with a damaged antenna. A damaged antenna could cause a minor skin burn. Contact your local dealer for a replacement antenna.

Part 15.19 statement

This device complies with part15 of FCC rules. Operation is subject to the following two conditions:

(1) This device may not cause harmful interference.

(2) This device must accept any interference received, including interference that may cause undesired operation.

Part 15.21 statement

Changes or modifications that are not expressly approved by the manufacturer could void the user's authority to operate the equipment.

Part 15.105 statement

This equipment has been tested and found to comply with the limits for a class B digital device, pursuant to Part 15 of the FCC Rules. These limits are designed to provide reasonable protection against harmful interference in a residential installation. This equipment generates uses and can radiate radio frequency energy and, if not installed and used in accordance with the instructions, may cause harmful interference to radio communications. However, there is no guarantee that interference will not occur in a particular installation. If this equipment does cause harmful interference or television reception, which can be determined by turning the equipment off and on, the user is encouraged to try to correct the interference by one or more of the following measures:

- Reorient or relocate the receiving antenna.
- Increase the separation between the equipment and receiver.
- Connect the equipment into an outlet on a circuit different from that to which the receiver is connected.

- Consult the dealer or an experienced radio/TV technician for help.

Consumer Information About Radio Frequency Emissions

Your wireless phone, which contains a radio transmitter and receiver, emits radio frequency energy during use. The following consumer information addresses commonly asked questions about the health effects of wireless phones.

Are wireless phones safe?

Scientific research on the subject of wireless phones and radio frequency ("RF") energy has been conducted worldwide for many years, and continues. In the United States, the Food and Drug Administration ("FDA") and the Federal Communications Commission ("FCC") set policies and procedures for wireless phones. The FDA issued a website publication on health issues related to cell phone usage where it states, "The scientific community at large … believes that the weight of scientific evidence does not show an association between exposure to radiofrequency (RF) from cell phones and adverse health outcomes. Still the scientific community does recommend conducting additional research to address gaps in knowledge. That research is being conducted around the world and FDA continues to monitor developments in this field. You can access the joint FDA/FCC website at http://www.fda.gov (under "c"in the subject index, select Cell Phones > Research). You can also contact the FDA toll-free at (888) 463-6332 or (888) INFO-FDA. In June 2000, the FDA entered into a cooperative research and development agreement through which additional scientific research is being conducted. The FCC issued its own website publication stating that "there is no scientific evidence that proves that wireless phone usage can lead to cancer or a variety of other problems, including headaches, dizziness or memory loss." This publication is available at http://www.fcc.gov/cgb/ cellular.html or through the FCC at (888) 225-5322 or (888) CALL-FCC.

What does "SAR" mean?

In 1996, the FCC, working with the FDA, the U.S. Environmental Protection Agency, and other agencies, established RF exposure safety guidelines for wireless phones in the United States. Before a wireless phone model is available for sale to the public, it must be tested by the manufacturer and certified to the FCC that it does not exceed limits established by the FCC. One of these limits is expressed as a Specific Absorption Rate, or "SAR." SAR is a measure of the rate of absorption of RF energy in the body. Tests for SAR are conducted with the phone transmitting at its highest power level in all tested frequency bands. Since 1996, the FCC has required that the SAR of handheld wireless phones not exceed 1.6 watts per kilogram, averaged over one gram of tissue.

Although the SAR is determined at the highest power level, the actual SAR value of a wireless phone while operating can be less than the reported SAR value. This is because the SAR value may vary from call to call, depending on factors such as proximity to a cell site, the proximity of the phone to the body while in use, and the use of hands-free devices. For more information about SARs, see the FCC's OET Bulletins 56 and 65 at http://www.fcc.gov/Bureaus/Engineering_Technology/Documents/bulletins or visit the Cellular Telecommunications Industry Association website at http://www.ctia.org/consumer_info/index.cfm/AID/10371. You may also wish to contact the manufacturer of your phone.

Can I minimize my RF exposure?

If you are concerned about RF, there are several simple steps you can take to minimize your RF exposure. You can, of course, reduce your talk time. You can place more distance between your body and the source of the RF, as the exposure level drops off dramatically with distance. The FDA/FCC website states that "hands-free kits can be used with wireless phones for convenience and comfort. These systems reduce the absorption of RF energy in the head because the phone, which is the source of the RF emissions, will not be placed against the head. On the other hand, if the phone is mounted against the waist or other part of the body during use, then

that part of the body will absorb more RF energy. Wireless phones marketed in the U.S. are required to meet safety requirements regardless of whether they are used against the head or against the body. Either configuration should result in compliance with the safety limit." Also, if you use your wireless phone while in a car, you can use a phone with an antenna on the outside of the vehicle. You should also read and follow your wireless phone manufacturer's instructions for the safe operation of your phone.

Do wireless phones pose any special risks to children?

The FDA/FCC website states that "the scientific evidence does not show a danger to users of wireless communication devices, including children." The FDA/FCC website further states that "some groups sponsored by other national governments have advised that children be discouraged from using wireless phones at all". For example, the Stewart Report from the United Kingdom **["UK"]** made such a recommendation in December 2000. In this report a group of independent experts noted that no evidence exists that using a cell phone causes brain tumors or other ill effects. **[The UK's]** recommendation to limit cell phone use by children was strictly precautionary; it was not based on scientific evidence that any health hazard exists. A copy of the UK's leaflet is available at http://www.dh.gov.uk (search "mobile"), or you can write to: NRPB, Chilton, Didcot, Oxon OX11 ORQ, United Kingdom. Copies of the UK's annual reports on mobile phones and RF are available online at www.iegmp.org.uk and http://www.hpa.org.uk/radiation/ (search "mobile"). Parents who wish to reduce their children's RF exposure may choose to restrict their children's wireless phone use.

Where can I get further information about RF emissions?

For further information, see the following additional resources (websites current as of April 2005):

U.S. Food and Drug Administration

FDA Consumer magazine

November-December 2000

Telephone: (888) INFO-FDA

http://www.fda.gov (Under “c” in the subject index, select Cell Phones > Research.)

U.S. Federal Communications Commission

445 12th Street, S.W.

Washington, D.C. 20554

Telephone: (888) 225-5322

http://www.fcc.gov/oet/rfsafety

Independent Expert Group on Mobile Phones

http://www.iegmp.org.uk

Royal Society of Canada Expert Panels on Potential Health Risks of Radio Frequency Fields from Wireless Telecommunication Devices

283 Sparks Street

Ottawa, Ontario K1R 7X9

Canada

Telephone: (613) 991-6990

http://www.rsc.ca/index.php?page=Expert_Panels_RF&Lang_id=120

World Health Organization

Avenue Appia 20 1211 Geneva 27

Switzerland

Telephone: 011 41 22 791 21 11

http://www.who.int/mediacentre/factsheets/fs193/en/

International Commission on Non-Ionizing Radiation Protection

c/o Bundesamt fur Strahlenschutz

Ingolstaedter Landstr. 1

85764 Oberschleissheim

Germany

Telephone: 011 49 1888 333 2156

http://www.icnirp.de

American National Standards Institute

1819 L Street, N.W., 6th Floor
Washington, D.C. 20036

Telephone: (202) 293-8020

http://www.ansi.org

National Council on Radiation Protection and Measurements

7910 Woodmont Avenue, Suite 800

Bethesda, MD 20814-3095

Telephone: (301) 657-2652

http://www.ncrponline.org

Engineering in Medicine and Biology Society, Committee on Man and Radiation (COMAR) of the Institute of Electrical and Electronics Engineers

http://ewh.ieee.org/soc/embs/comar/

Consumer Information on SAR

(Specific Absorption Rate)

This model phone meets the government's requirements for exposure to radio waves. Your wireless phone is a radio transmitter and receiver. It is designed and manufactured not to exceed the emission limits for exposure to Radio Frequency (RF) energy set by the Federal Communications Commission of the U.S. Government. These limits are part of comprehensive guidelines and establish permitted levels of RF energy for the general population. The guidelines are based on standards that were developed by independent scientific organizations through periodic and thorough evaluation of scientific studies. The standards include a substantial safety margin designed to assure the safety of all persons, regardless of age and health.

The exposure standard for wireless mobile phones employs a unit of measurement known as the Specific Absorption Rate, or SAR. The SAR limit set by the FCC is 1.6 W/kg. Tests for SAR are conducted using standard operating positions specified by the FCC with the phone transmitting at its highest certified power level in all tested frequency bands. Although SAR is determined at the highest certified power level, the actual SAR level of the phone while operating can be well below the maximum value. Because the phone is designed to operate at multiple power levels to use only the power required to reach the network, in general, the closer you are to a wireless base station antenna, the lower the power output.

Before a phone model is available for sale to the public, it must be tested and certified to the FCC that it does not exceed the limit established by the government-adopted requirement for safe exposure. The tests are performed in positions and locations (e.g., at the ear and worn on the body)

as required by the FCC for each model.

The highest SAR value for this model phone when tested for use at the ear is 0.78 W/kg and when worn on the body, as described in this user guide, is 0.66 W/kg (body-worn measurements differ among phone models, depending upon available accessories and FCC requirements). While there may be differences between SAR levels of various phones and at various positions, they all meet the government requirement for safe exposure.

The FCC has granted an Equipment Authorization for this model phone with all reported SAR levels evaluated as in compliance with the FCC RF emission guidelines. SAR information on this model phone is on file with the FCC and can be found under the Display Grant section of http://www.fcc.gov/oet/fccid after searching on FCC ID ZNFVN210Additional information on Specific Absorption Rates (SAR) can be found on the Cellular Telecommunications Industry Association (CTIA) website at http://www.ctia.org/.

* In the United States and Canada, the SAR limit for mobile phones used by the public is 1.6 watts/kg (W/kg) averaged over one gram of tissue. The standard incorporates a substantial margin of safety to give additional protection for the public and to account for any variations in measurements.

FCC Hearing-Aid Compatibility (HAC) Regulations for Wireless Devices

On July 10, 2003, the U.S. Federal Communications Commission (FCC) Report and Order in WT Docket 01-309 modified the exception of wireless phones under the Hearing Aid Compatibility Act of 1988 (HAC Act) to require digital wireless phones be compatible with hearing-aids. The intent of the HAC Act is to ensure reasonable access to telecommunications services for persons with hearing disabilities.

While some wireless phones are used near some hearing devices (hearing aids and cochlear implants), users may detect a

buzzing, humming, or whining noise. Some hearing devices are more immune than others to this interference noise, and phones also vary in the amount of interference they generate.

The wireless telephone industry has developed a rating system for wireless phones, to assist hearing device users to find phones that may be compatible with their hearing devices. Not all phones have been rated. Phones that are rated have the rating on their box or a label located on the box.

The ratings are not guarantees. Results will vary depending on the user's hearing device and hearing loss. If your hearing device happens to be vulnerable to interference, you may not be able to use a rated phone successfully. Trying out the phone with your hearing device is the best way to evaluate it for your personal needs.

M-Ratings: Phones rated M3 or M4 meet FCC requirements and are likely to generate less interference to hearing devices than phones that are not labeled. M4 is the better/higher of the two ratings.

T-Ratings: Phones rated T3 or T4 meet FCC requirements and are likely to generate less interference to hearing devices than phones that are not labeled. T4 is the better/ higher of the two ratings.

Hearing devices may also be rated. Your hearing device manufacturer or hearing health professional may help you find this rating. Higher ratings mean that the hearing device is relatively immune to interference noise. The hearing aid and wireless phone rating values are then added together. A sum of 5 is considered acceptable for normal use. A sum of 6 is considered for best use.

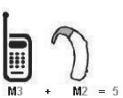

In the above example, if a hearing aid meets the M2 level rating and the wireless phone meets the M3 level rating, the sum of the two values equal M5. This should provide the hearing aid user with "normal usage" while using their hearing aid with the particular wireless phone. "Normal usage" in this context is defined as a signal

quality that's acceptable for normal operation.

The M mark is intended to be synonymous with the U mark. The T mark is intended to be synonymous with the UT mark. The M and T marks are recommended by the Alliance for Telecommunications Industries Solutions (ATIS). The U and UT marks are referenced in Section 20.19 of the FCC Rules. The HAC rating and measurement procedure are described in the American National Standards Institute (ANSI) C63.19 standard.

When you're talking over the cell phone, it's recommended you'd turn the BT (Bluetooth) mode off for HAC.

For information about hearing aids and digital wireless phones

Wireless Phones and Hearing Aid Accessibility

http://www.accesswireless.org/hearingaid/

FCC Hearing Aid Compatibility and Volume Control

http://www.fcc.gov/cgb/consumerfacts/hac_wireless.html

Caution: Avoid potential hearing loss.

Prolonged exposure to loud sounds (including music) is the most common cause of preventable hearing loss. Some scientific research suggests that using portable audio devices, such as portable music players and cellular telephones, at high volume settings for long durations may lead to permanent noise-induced hearing loss. This includes the use of headphones (including headsets, earbuds and Bluetooth® or other wireless devices). Exposure to very loud sound has also been associated in some studies with tinnitus (a ringing in the ear), hypersensitivity to sound and distorted hearing. Individual susceptibility to noise-induced hearing loss and other potential hearing problems varies.

The amount of sound produced by a portable audio device varies depending on the nature of the sound, the device, the device settings and the headphones. You should follow some commonsense recommendations when using any portable audio device:

- Set the volume in a quiet environment and select the lowest volume at which you can hear adequately.
- When using headphones, turn the volume down if you cannot hear the people speaking near you or if the person sitting next to you can hear what you are listening to.
- Do not turn the volume up to block out noisy surroundings. If you choose to listen to your portable device in a noisy environment, use noise-cancelling headphones to block out background environmental noise.
- Limit the amount of time you listen. As the volume increases, less time is required before your hearing could be affected.
- Avoid using headphones after exposure to extremely loud noises, such as concerts, that might cause temporary hearing loss. Temporary hearing loss might cause unsafe volumes to sound normal.
- Do not listen at any volume that causes you discomfort. If you experience ringing in your ears, hear muffled speech or experience any temporary hearing difficulty after listening to your portable audio device, discontinue use and consult your doctor.

TIA Safety Information

The following is the complete TIA Safety Information for wireless handheld phones.

Exposure to Radio Frequency Signal

Your wireless handheld portable phone is a low power radio transmitter and receiver. When ON, it receives and sends out Radio Frequency (RF) signals.

In August, 1996, the Federal Communications Commissions (FCC) adopted RF exposure guidelines with safety levels for handheld wireless phones. Those guidelines are consistent with the safety standards previously set by both U.S. and international standards bodies:

ANSI C95.1 (1992) *

NCRP Report 86 (1986)

ICNIRP (1996)

* American National Standards Institute; National Council

on Radiation Protection and Measurements; International Commission on Non-Ionizing Radiation Protection

Those standards were based on comprehensive and periodic evaluations of the relevant scientific literature. For example, over 120 scientists, engineers, and physicians from universities, government health agencies, and industry reviewed the available body of research to develop the ANSI Standard (C95.1).

The design of your phone complies with the FCC guidelines (and those standards).

Antenna Care

Use only the supplied or an approved replacement antenna. Unauthorized antennas, modifications, or attachments could damage the phone and may violate FCC regulations.

Tips on Efficient Operation

For your phone to operate most efficiently:
Don't touch the antenna unnecessarily when the phone is in use. Contact with the antenna affects call quality and may cause the phone to operate at a higher power level than otherwise needed.

Electronic Devices

Most modern electronic equipment is shielded from RF signals. However, certain electronic equipment may not be shielded against the RF signals from your wireless phone.

Pacemakers

The Health Industry Manufacturers Association recommends that a minimum separation of six (6) inches be maintained between a handheld wireless phone and a pacemaker to avoid potential interference with the pacemaker. These recommendations are consistent with the independent research by and recommendations of Wireless Technology Research. Persons with pacemakers:

- Should ALWAYS keep the phone more than six (6) inches from

their pacemaker when the phone is turned ON;

- Should not carry the phone in a breast pocket;
- Should use the ear opposite the pacemaker to minimize the potential for interference;
- Should turn the phone OFF immediately if there is any reason to suspect that interference is taking place.

Hearing Aids

Some digital wireless phones may interfere with some hearing aids. In the event of such interference, you may want to consult your service provider (or call the customer service line to discuss alternatives).

Other Medical Devices

If you use any other personal medical device, consult the manufacturer of your device to determine if it is adequately shielded from external RF energy. Your physician may be able to assist you in obtaining this information.

Health Care Facilities

Turn your phone OFF in health care facilities when any regulations posted in these areas instruct you to do so. Hospitals or health care facilities may use equipment that could be sensitive to external RF energy.

Vehicles

RF signals may affect improperly installed or inadequately shielded electronic systems in motor vehicles. Check with the manufacturer or its representative regarding your vehicle. You should also consult the manufacturer of any equipment that has been added to your vehicle.

Posted Facilities

Turn your phone OFF in any facility where posted notices so require.

Aircraft

FCC regulations prohibit using your phone while in the air. Switch OFF your phone before boarding an aircraft.

Blasting Areas

To avoid interfering with blasting operations, turn your phone OFF when in a “blasting area” or in areas posted: “Turn off two-way radio”. Obey all signs and instructions.

Potentially Explosive Atmosphere

Turn your phone OFF when in any area with a potentially explosive atmosphere and obey all signs and instructions. Sparks in such areas could cause an explosion or fire resulting in bodily injury or even death.

Areas with a potentially explosive atmosphere are often, but not always marked clearly. Potential areas may include: fueling areas (such as gasoline stations); below deck on boats; fuel or chemical transfer or storage facilities; vehicles using liquefied petroleum gas (such as propane or butane); areas where the air contains chemicals or particles (such as grain, dust, or metal powders); and any other area where you would normally be advised to turn off your vehicle engine.

For Vehicles Equipped with an Air Bag

An air bag inflates with great force. DO NOT place objects, including either installed or portable wireless equipment, in the area over the air bag or in the air bag deployment area. If in-vehicle wireless equipment is improperly installed and the air bag inflates, serious injury could result.

Safety Information

Please read and observe the following information for safe and proper use of your phone and to prevent damage.

⚠Caution

Violation of the instructions may cause minor or serious damage to the product.

- Do not disassemble or open crush, bend or deform, puncture or shred.
- Do not modify or remanufacture, attempt to insert foreign objects into the battery, immerse or expose to water or other liquids, expose to fire, explosion or other hazard. Such conditions may present the risk of fire or explosion.
- Only use the battery for the system for which it is specified.
- Only use the battery with a charging system that has been approved and qualified with the system per IEEE-Std-1725-2006. Use of an unqualified and non-approved

battery or charger may present a risk of fire, explosion, leakage, or other hazard.

- Do not short circuit a battery or allow metallic conductive objects to contact battery terminals.
- Replace the battery only with another battery that has been approved and qualified with the system per this standard, IEEE-Std-1725-2006. Use of an unqualified and non-approved battery may present a risk of fire, explosion, leakage or other hazard.
  Only authorized service providers shall replace battery (If the battery is non-user replaceable).
- Promptly dispose of used batteries in accordance with local regulations.
- Battery usage by children should be supervised.
- Avoid dropping the phone or battery. If the phone or battery is dropped, especially on a hard surface, and the user suspects damage, take it to a service center for inspection.
- At least, one of the Authentication methods may be implemented. (e.g. H/W, S/W, Mechanical, Hologram, etc.)
- Improper battery use may result in a fire, explosion or other hazard.

Charger and Adapter Safety

- The charger and adapter are intended for indoor use only.
- Insert the battery pack charger vertically into the wall power socket.
- Only use the approved battery charger. Otherwise, you may cause serious damage to your phone.
- Use the correct adapter for your phone when using the battery pack charger abroad.

Battery Information and Care

- Always unplug the charger from the wall socket after the phone is fully charged to save unnecessary power consumption of the charger.
- Please read the user guide of proper installation and removal of the battery.

- Please read the manual of specified charger about charging method.
- Do not damage the power cord by bending, twisting, or heating. Do not use the plug if it is loose as it may cause electric shock or fire.
- Do not place any heavy items on the power cord. Do not allow the power cord to be crimped as it may cause electric shock or fire.
- Unplug the power cord prior to cleaning your phone, and clean the power plug pin when it's dirty. When using the power plug, ensure that it's firmly connected. If not, it may cause excessive heat or fire. If you put your phone in a pocket or bag without covering the receptacle of the phone (power plug pin), metallic articles (such as a coin, paperclip or pen) may short-circuit the phone. Always cover the receptacle when not in use.
- Recharge the battery after long periods of non-use to maximize battery life. Battery life will vary due to usage pattern and environmental conditions.
- Please use only an approved charging accessory to charge your LG phone. Improper handling of the charging port, as well as the use of an incompatible charger, may cause damage to your phone and void the warranty.
- Charging temperature range is regulated between 32˚F (0˚C) and 113˚F (45˚C). Do not charge the battery out of recommended temperature range. Charging out of recommended range might cause the generating heat or serious damage of battery. And also, it might cause the deterioration of battery's characteristics and cycle life.
- Do not use or leave the battery under the blazing sun or in heated car by sunshine. The battery may generate heat, smoke or flame. And also, it might cause the deterioration of battery's characteristics or cycle life.
- The battery pack has protection circuit to avoid the danger. Do not use nearby the place where generates static electricity more than 100V which gives damage

to the protection circuit. If the protection circuit were broken, the battery would generate smoke, rupture or flame.

- When there is rust on the battery or if it gives off a bad or unusual odor the first time you use it, do not use the equipment and bring the battery to the shop where it was purchased.
- In case younger children use the battery, their parents should teach them how to use batteries according to the manual with care.
- If the skin or cloth is smeared with liquid from the battery, wash with fresh water. It may cause the skin inflammation. Remove and do not use the battery.
- Do not handle the phone with wet hands while it is being charged. It may cause an electric shock or seriously damage your phone.
- Do not place or answer calls while charging the phone as it may short-circuit the phone and/or cause electric shock or fire.
- The charger and adapter are intended for indoor use only.
- Insert the battery pack charger vertically into the wall power socket.
- Only use the approved battery charger. Otherwise, you may cause serious damage to your phone and risk of overheating, fire or explosion may occur.
- Use the correct adapter for your phone when using the battery pack charger abroad.
- Talking on your phone for a long period of time may reduce call quality due to heat generated during use.
- Do not use harsh chemicals (such as alcohol, benzene, thinners, etc.) or detergents to clean your phone. This could cause a fire. Do not place or answer calls while charging the phone as it may short-circuit the phone and/or cause electric shock or fire. Don't short-circuit the battery. Metallic articles such as a coin, paperclip or pen in your pocket or bag may short-circuit the + and – terminals of the battery (metal strips on the battery) upon moving. Short-circuit of

the terminal may damage the battery and cause an explosion.

- Never use an unapproved battery since this could damage the phone and/or battery and could cause the battery to explode. Only use the batteries and chargers provided by LG. The warranty will not be applied to products provided by other suppliers. Only authorized personnel should service the phone and its accessories. Faulty installation or service may result in accidents and consequently invalidate the warranty.

Explosion, Shock, and Fire Hazards

- Do not put your phone in a place subject to excessive dust and keep the minimum required distance between the power cord and heat sources.
- Unplug the power cord prior to cleaning your phone, and clean the power plug pin when it's dirty.
- When using the power plug, ensure that it's firmly connected. If not, it may cause excessive heat or fire.
- If you put your phone in a pocket or bag without covering the receptacle of the phone (power plug pin), metallic articles (such as a coin, paperclip or pen) may short-circuit the phone and may cause an explosion. Always cover the receptacle when not in use.
- Don't short-circuit the battery. Metallic articles such as a coin, paperclip or pen in your pocket or bag or contact with sharp objects including animal bites may short-circuit the + and – terminals of the battery (metal strips on the battery) upon moving. Short-circuit of the terminal may damage the battery and cause an explosion.

General Notice

- Using a damaged battery or placing a battery in your mouth or animal's mouth may cause serious injury including a fire or explosion.
- Do not place items containing magnetic components such as a credit card, phone card, bank book, or subway ticket near your phone. The magnetism of the phone may damage the data stored in the magnetic strip.

- Talking on your phone for a long period of time may reduce call quality due to heat generated during use.
- When the phone is not used for a long period time, store it in a safe place with the power cord unplugged.
- Using the phone in proximity to receiving equipment (i.e., TV or radio) may cause interference to the phone.
- Do not use the phone if the antenna is damaged. If a damaged antenna contacts skin, it may cause a slight burn. Please contact an LG Authorized Service Center to replace the damaged antenna.
- Do not immerse your phone in water, liquid, or expose to high humidity. If this happens, turn it off immediately and remove the battery. Immediately, take it to an LG Authorized Service Center.
- Do not paint your phone.
- The data saved in your phone might be deleted due to careless use, repair of the phone, or upgrade of the software. Please backup your important phone numbers. (Ringtones, text messages, voice messages, and pictures, and videos could also be deleted.) The manufacturer is not liable for damage due to the loss of data.
- When you use the phone in public places, set the ringtone to vibration so you don't disturb others.
- Do not turn your phone on or off when putting it to your ear.
- Use accessories, such as earphones and headsets, with caution. Ensure that cables are tucked away safely and do not touch the antenna unnecessarily.

FDA Consumer Update

The U.S. Food and Drug Administration's Center for Devices and Radiological Health Consumer Update on Mobile Phones:

1. Do wireless phones pose a health hazard?

The available scientific evidence does not show that any health problems are associated with using wireless phones. There is no proof, however, that wireless phones are absolutely safe. Wireless phones

emit low levels of Radio Frequency (RF) energy in the microwave range while being used. They also emit very low levels of RF when in standby mode. Whereas high levels of RF can produce health effects (by heating tissue), exposure to low level RF that does not produce heating effects causes no known adverse health effects. Many studies of low level RF exposures have not found any biological effects. Some studies have suggested that some biological effects may occur, but such findings have not been confirmed by additional research. In some cases, other researchers have had difficulty in reproducing those studies, or in determining the reasons for inconsistent results.

2. What is the FDA's role concerning the safety of wireless phones?

Under the law, the FDA does not review the safety of radiation-emitting consumer products such as wireless phones before they can be sold, as it does with new drugs or medical devices. However, the agency has authority to take action if wireless phones are shown to emit Radio Frequency (RF) energy at a level that is hazardous to the user. In such a case, the FDA could require the manufacturers of wireless phones to notify users of the health hazard and to repair, replace, or recall the phones so that the hazard no longer exists.

Although the existing scientific data do not justify FDA regulatory actions, the FDA has urged the wireless phone industry to take a number of steps, including the following:

- Support needed research into possible biological effects of RF of the type emitted by wireless phones;
- Design wireless phones in a way that minimizes any RF exposure to the user that is not necessary for device function; and
- Cooperate in providing users of wireless phones with the best possible information on possible effects of wireless phone use on human health.

The FDA belongs to an interagency working group of the federal agencies that have responsibility for different aspects of RF safety to ensure coordinated efforts at the federal level. The following agencies belong to this working group:

- National Institute for Occupational Safety and Health
- Environmental Protection Agency
- Occupational Safety and Health Administration
- National Telecommunications and Information Administration

The National Institutes of Health participates in some interagency working group activities, as well.

The FDA shares regulatory responsibilities for wireless phones with the Federal Communications Commission (FCC). All phones that are sold in the United States must comply with FCC safety guidelines that limit RF exposure. The FCC relies on the FDA and other health agencies for safety questions about wireless phones.

The FCC also regulates the base stations that the wireless phone networks rely upon. While these base stations operate at higher power than do the wireless phones themselves, the RF exposures that people get from these base stations are typically thousands of times lower than those they can get from wireless phones. Base stations are thus not the subject of the safety questions discussed in this document.

3. What kinds of phones are the subject of this update?

The term "wireless phone" refers here to handheld wireless phones with built-in antennas, often called "cell", "mobile", or "PCS" phones. These types of wireless phones can expose the user to measurable Radio Frequency (RF) energy because of the short distance between the phone and the user's head.

These RF exposures are limited by FCC safety guidelines that were developed with the advice of the FDA and other federal health and safety agencies. When the phone is located at greater distances from the user, the exposure to RF is drastically lower because a person's RF exposure decreases rapidly with increasing distance from the source. The so-called "cordless phones," which have a base unit connected to the telephone wiring in a house, typically operate at far lower power levels, and thus produce RF exposures far below the FCC safety limits.

4. What are the results of the research done already?

The research done thus far has produced conflicting results, and many studies have suffered from flaws in their research methods. Animal experiments investigating the effects of Radio Frequency (RF) energy exposures characteristic of wireless phones have yielded conflicting results that often cannot be repeated in other laboratories. A few animal studies, however, have suggested that low levels of RF could accelerate the development of cancer in laboratory animals. However, many of the studies that showed increased tumor development used animals that had been genetically engineered or treated with cancer-causing chemicals so as to be pre-disposed to develop cancer in the absence of RF exposure. Other studies exposed the animals to RF for up to 22 hours per day. These conditions are not similar to the conditions under which people use wireless phones, so we do not know with certainty what the results of such studies mean for human health. Three large epidemiology studies have been published since December 2000. Between them, the studies investigated any possible association between the use of wireless phones and primary brain cancer, glioma, meningioma, or acoustic neuroma, tumors of the brain or salivary gland, leukemia, or other cancers. None of the studies demonstrated the existence of any harmful health effects from wireless phone RF exposures. However, none of the studies can answer questions about long-term exposures, since the average period of phone use in these studies was around three years.

5. What research is needed to decide whether RF exposure from wireless phones poses a health risk?

A combination of laboratory studies and epidemiological studies of people actually using wireless phones would provide some of the data that are needed. Lifetime animal exposure studies could be completed in a few years. However, very large numbers of animals would be needed to provide reliable proof of a cancer promoting effect if one exists. Epidemiological studies can provide data that is directly applicable to human populations,

but ten or more years follow-up may be needed to provide answers about some health effects, such as cancer. This is because the interval between the time of exposure to a cancer-causing agent and the time tumors develop — if they do — may be many, many years. The interpretation of epidemiological studies is hampered by difficulties in measuring actual RF exposure during day-to-day use of wireless phones. Many factors affect this measurement, such as the angle at which the phone is held, or which model of phone is used.

6. What is the FDA doing to find out more about the possible health effects of wireless phone RF?

The FDA is working with the U.S. National Toxicology Program and with groups of investigators around the world to ensure that high priority animal studies are conducted to address important questions about the effects of exposure to Radio Frequency (RF) energy.

The FDA has been a leading participant in the World Health Organization International Electro Magnetic Fields (EMF) Project since its inception in 1996. An influential result of this work has been the development of a detailed agenda of research needs that has driven the establishment of new research programs around the world. The project has also helped develop a series of public information documents on EMF issues.

The FDA and the Cellular Telecommunications & Internet Association (CTIA) have a formal Cooperative Research And Development Agreement (CRADA) to do research on wireless phone safety. The FDA provides the scientific oversight, obtaining input from experts in government, industry, and academic organizations. CTIA-funded research is conducted through contracts with independent investigators. The initial research will include both laboratory studies and studies of wireless phone users. The CRADA will also include a broad assessment of additional research needs in the context of the latest research developments around the world.

7. How can I find out how much Radio Frequency energy exposure I can get by using my wireless phone?

All phones sold in the United States must comply with Federal Communications Commission (FCC) guidelines that limit Radio Frequency (RF) energy exposures. The FCC established these guidelines in consultation with the FDA and the other federal health and safety agencies. The FCC limit for RF exposure from wireless phones is set at a Specific Absorption Rate (SAR) of 1.6 watts per kilogram (1.6 W/kg). The FCC limit is consistent with the safety standards developed by the Institute of Electrical and Electronic Engineering (IEEE) and the National Council on Radiation Protection and Measurement. The exposure limit takes into consideration the body's ability to remove heat from the tissues that absorb energy from the wireless phone and is set well below levels known to have effects. Manufacturers of wireless phones must report the RF exposure level for each model of phone to the FCC. The FCC website (http://www.fcc.gov/oet/rfsafety) gives directions for locating the FCC identification number on your phone so you can find your phone's RF exposure level in the online listing.

8. What has the FDA done to measure the Radio Frequency energy coming from wireless phones?

The Institute of Electrical and Electronic Engineers (IEEE) is developing a technical standard for measuring the Radio Frequency (RF) energy exposure from wireless phones and other wireless handsets with the participation and leadership of FDA scientists and engineers. The standard, "Recommended Practice for Determining the Spatial-Peak Specific Absorption Rate (SAR) in the Human Body Due to Wireless Communications Devices: Experimental Techniques", sets forth the first consistent test methodology for measuring the rate at which RF is deposited in the heads of wireless phone users. The test method uses a tissue-simulating model of the human head. Standardized SAR test methodology is expected to greatly improve the consistency of measurements made at different

laboratories on the same phone. SAR is the measurement of the amount of energy absorbed in tissue, either by the whole body or a small part of the body. It is measured in watts/kg (or milliwatts/g) of matter. This measurement is used to determine whether a wireless phone complies with safety guidelines.

9. What steps can I take to reduce my exposure to Radio Frequency energy from my wireless phone?

If there is a risk from these products — and at this point we do not know that there is — it is probably very small. But if you are concerned about avoiding even potential risks, you can take a few simple steps to minimize your exposure to Radio Frequency (RF) energy. Since time is a key factor in how much exposure a person receives, reducing the amount of time spent using a wireless phone will reduce RF exposure. If you must conduct extended conversations by wireless phone every day, you could place more distance between your body and the source of the RF, since the exposure level drops off dramatically with distance. For example, you could use a headset and carry the wireless phone away from your body or use a wireless phone connected to a remote antenna. Again, the scientific data does not demonstrate that wireless phones are harmful. But if you are concerned about the RF exposure from these products, you can use measures like those described above to reduce your RF exposure from wireless phone use.

10. What about children using wireless phones?

The scientific evidence does not show a danger to users of wireless phones, including children and teenagers. If you want to take steps to lower exposure to Radio Frequency (RF) energy, the measures described above would apply to children and teenagers using wireless phones. Reducing the time of wireless phone use and increasing the distance between the user and the RF source will reduce RF exposure.

Some groups sponsored by other national governments have advised that children be discouraged from using wireless phones at all. For example, the government in the United Kingdom

distributed leaflets containing such a recommendation in December 2000. They noted that no evidence exists that using a wireless phone causes brain tumors or other ill effects. Their recommendation to limit wireless phone use by children was strictly precautionary; it was not based on scientific evidence that any health hazard exists.

11. What about wireless phone interference with medical equipment?

Radio Frequency (RF) energy from wireless phones can interact with some electronic devices. For this reason, the FDA helped develop a detailed test method to measure Electro Magnetic Interference (EMI) of implanted cardiac pacemakers and defibrillators from wireless telephones. This test method is now part of a standard sponsored by the Association for the Advancement of Medical Instrumentation (AAMI). The final draft, a joint effort by the FDA, medical device manufacturers, and many other groups, was completed in late 2000. This standard will allow manufacturers to ensure that cardiac pacemakers and defibrillators are safe from wireless phone EMI.

The FDA has tested hearing aids for interference from handheld wireless phones and helped develop a voluntary standard sponsored by the Institute of Electrical and Electronic Engineers (IEEE). This standard specifies test methods and performance requirements for hearing aids and wireless phones so that no interference occurs when a person uses a “compatible” phone and a “compatible” hearing aid at the same time. This standard was approved by the IEEE in 2000.

The FDA continues to monitor the use of wireless phones for possible interactions with other medical devices. Should harmful interference be found to occur, the FDA will conduct testing to assess the interference and work to resolve the problem.

12. Where can I find additional information?

For additional information, please refer to the following resources:

FDA web page on wireless phones (http://www.fda.gov/cellphones/)

Federal Communications Commission (FCC) RF Safety Program (http://www.fcc.gov/oet/rfsafety)

International Commission on Non-Ionizing Radiation Protection (http://www.icnirp.de)

World Health Organization (WHO) International EMF Project (http://www.who.int/emf)

National Radiological Protection Board (UK) (http://www.hpa.org.uk/radiation/)

Driving

Check the laws and regulations on the use of wireless phones in the areas where you drive and always obey them. Also, if using your phone while driving, please observe the following:

- Give full attention to driving -- driving safely is your first responsibility;
- Use hands-free operation, if available;
- Pull off the road and park before making or answering a call if driving conditions or the law require it.

10 Driver Safety Tips

Your wireless phone gives you the powerful ability to communicate by voice almost anywhere, anytime. An important responsibility accompanies the benefits of wireless phones, one that every user must uphold.

When operating a car, driving is your first responsibility. When using your wireless phone behind the wheel of a car, practice good common sense and remember the following tips:

1. Get to know your wireless phone and its features such as speed dial and redial. Carefully read your instruction manual and learn to take advantage of valuable features most phones offer, including automatic redial and memory. Also, work to memorize the phone keypad so you can use the speed dial function without taking your attention off the road.
2. When available, use a hands-free device. A number of hands-free wireless phone accessories are readily available today. Whether you choose an installed mounted device for your wireless phone or a

speaker phone accessory, take advantage of these devices if available to you.

3. Make sure you place your wireless phone within easy reach and where you can reach it without removing your eyes from the road. If you get an incoming call at an inconvenient time, if possible, let your voicemail answer it for you.
4. Suspend conversations during hazardous driving conditions or situations. Let the person you are speaking with know you are driving; if necessary, suspend the call in heavy traffic or hazardous weather conditions. Rain, sleet, snow, and ice can be hazardous, but so is heavy traffic. As a driver, your first responsibility is to pay attention to the road.
5. Don't take notes or look up phone numbers while driving. If you are reading an address book or business card, or writing a "to-do" list while driving a car, you are not watching where you are going. It is common sense. Do not get caught in a dangerous situation because you are reading or writing and not paying attention to the road or nearby vehicles.
6. Dial sensibly and assess the traffic; if possible, place calls when you are not moving or before pulling into traffic. Try to plan your calls before you begin your trip or attempt to coincide your calls with times you may be stopped at a stop sign, red light, or otherwise stationary. But if you need to dial while driving, follow this simple tip -- dial only a few numbers, check the road and your mirrors, then continue.
7. Do not engage in stressful or emotional conversations that may be distracting. Stressful or emotional conversations and driving do not mix; they are distracting and even dangerous when you are behind the wheel of a car. Make people you are talking with aware you are driving and if necessary, suspend conversations which have the potential to divert your attention from the road.
8. Use your wireless phone to call for help. Your wireless phone is one of the greatest tools you can own to protect

yourself and your family in dangerous situations -- with your phone at your side, help is only three numbers away. Dial 911 or other local emergency number in the case of fire, traffic accident, road hazard, or medical emergency. Remember, it's a free call on your wireless phone!

9. Use your wireless phone to help others in emergencies. Your wireless phone provides you a perfect opportunity to be a "Good Samaritan" in your community. If you see an auto accident, crime in progress or other serious emergency where lives are in danger, call 911 or other local emergency number, as you would want others to do for you.
10. Call roadside assistance or a special wireless non-emergency assistance number when necessary. Certain situations you encounter while driving may require attention, but are not urgent enough to merit a call for emergency services. But you can still use your wireless phone to lend a hand. If you see a broken-down vehicle posing no serious hazard, a broken traffic signal, a minor traffic accident where no one appears injured or a vehicle you know to be stolen, call roadside assistance or other special non-emergency wireless number.

The above tips are meant as general guidelines. Before deciding to use your mobile device while operating a vehicle, it is recommended that you consult your applicable jurisdiction's local laws or other regulations regarding such use. Such laws or other regulations may prohibit or otherwise restrict the manner in which a driver may use his or her phone while operating a vehicle.

1. WHAT THIS WARRANTY COVERS:

LG offers you a limited warranty that the enclosed subscriber unit and its enclosed accessories will be free from defects in material and workmanship, according to the following terms and conditions:

(1) The limited warranty for the product extends for TWELVE (12) MONTHS beginning on the date of purchase of the product with valid proof of purchase, or absent valid proof of purchase, FIFTEEN (15) MONTHS from date of manufacture as determined by the unit's manufacture date code.

(2) The limited warranty extends only to the original purchaser of the product and is not assignable or transferable to any subsequent purchaser/end user.

(3) This warranty is good only to the original purchaser of the product during the warranty period as long as it is in the U.S., including Alaska, Hawaii, U.S. Territories and Canada.

(4) The external housing and cosmetic parts shall be free of defects at the time of shipment and, therefore, shall not be covered under these limited warranty terms.

(5) Upon request from LG, the consumer must provide information to reasonably prove the date of purchase.

(6) The customer shall bear the cost of shipping the product to the Customer Service Department of LG. LG shall bear the cost of shipping the product back to the consumer after the completion of service under this limited warranty.

2. WHAT THIS WARRANTY DOES NOT COVER:

(1) Defects or damages resulting from use of the product in other than its normal and customary manner.

(2) Defects or damages from abnormal use, abnormal conditions, improper storage, exposure to moisture or dampness, unauthorized modifications, unauthorized connections, unauthorized repair, misuse, neglect, abuse, accident, alteration, improper installation, or other acts which are not the fault of LG, including damage caused by shipping, blown fuses, spills of food or liquid.

(3) Breakage or damage to antennas unless caused directly by defects in material or workmanship.

(4) That the Customer Service Department at LG was not notified by consumer of the alleged defect or malfunction of the product during the applicable limited warranty period.

(5) Products which have had the serial number removed or made illegible.

(6) This limited warranty is in lieu of all other warranties, express or implied either in fact or by operations of law, statutory or otherwise, including, but not limited to any implied warranty of marketability or fitness for a particular use.

(7) Damage resulting from use of non LG approved accessories.

(8) All plastic surfaces and all other externally exposed parts that are scratched or damaged due to normal customer use.

(9) Products operated outside published maximum ratings.

(10) Products used or obtained in a rental program.

(11) Consumables (such as fuses).

3. WHAT LG WILL DO:

LG will, at its sole option, either repair, replace or refund the purchase price of any unit that does not conform to this limited warranty. LG may choose at its option to use functionally equivalent re-conditioned, refurbished or new units or parts or any units. In addition, LG will not re-install or back-up any data, applications or software that you have added to your phone. It is therefore recommended that you back-up any such data or information prior to sending the unit to LG to avoid the permanent loss of such information.

4. STATE LAW RIGHTS:

No other express warranty is applicable to this product. THE DURATION OF ANY IMPLIED WARRANTIES, INCLUDING THE IMPLIED WARRANTY OF MARKETABILITY, IS LIMITED TO THE DURATION OF THE EXPRESS WARRANTY HEREIN. LG SHALL NOT BE LIABLE FOR THE LOSS OF THE USE OF THE PRODUCT, INCONVENIENCE, LOSS OR ANY OTHER DAMAGES, DIRECT OR CONSEQUENTIAL, ARISING OUT OF THE USE OF, OR INABILITY

TO USE, THIS PRODUCT OR FOR ANY BREACH OF ANY EXPRESS OR IMPLIED WARRANTY, INCLUDING THE IMPLIED WARRANTY OF MARKETABILITY APPLICABLE TO THIS PRODUCT.

Some states do not allow the exclusive limitation of incidental or consequential damages or limitations on how long an implied warranty lasts; so these limitations or exclusions may not apply to you. This warranty gives you specific legal rights and you may also have other rights which vary from state to state.

5. HOW TO GET WARRANTY SERVICE:

If you experience any problems with either the Bluetooth headset or the mobile handset, in each case as may be covered by this limited warranty, you need only return the affected device. For example, if a problem exists with the Bluetooth headset, please DO NOT return your mobile handset with the headset. Likewise, if a problem exists with the mobile handset, please DO NOT return the Bluetooth Headset with the handset.

To obtain warranty service, please call or fax to the following telephone numbers from anywhere in the continental United States:

Tel. 1-800-793-8896 or Fax. 1-800-448-4026

Or visit http://us.lgservice.com. Correspondence may also be mailed to:

LG Electronics Service- Mobile Handsets, P.O. Box 240007, Huntsville, AL 35824

DO NOT RETURN YOUR PRODUCT TO THE ABOVE ADDRESS. Please call or write for the location of the LG authorized service center nearest you and for the procedures for obtaining warranty claims.

7.11 Warranty Laws

The following laws govern warranties that arise in retail sales of consumer goods:

- The California Song-Beverly Consumer Warranty Act **[CC §§1790 et seq]**,
- The California Uniform Commercial Code, Division Two **[Com C §§2101 et seq]**, and
- The federal Magnuson-Moss Warranty Federal Trade

Commission Improvement Act **[15 USC §§2301 et seq; 16 CFR Parts 701– 703]**. A typical Magnuson-Moss Act warranty is a written promise that the product is free of defects or a written promise to refund, repair, or replace defective goods. **[See 15 USC §2301(6).]** Remedies include damages for failing to honor a written warranty or service contract or for violating disclosure provisions. **[See 15 USC §2310(d).]** Except for some labeling and disclosure requirements, the federal Act does not preempt state law. **[See 15 USC §2311.]**

The Consumer Warranty Act does not affect the rights and obligations of parties under the state Uniform Commercial Code, except the provisions of the Act prevail over provisions of the Commercial Code when they conflict. **[CC §1790.3.]**

For purposes of small claims actions, this course will focus on rights and duties under the state laws.

Important Information

This user's guide provides important information on the use and operation of your phone. Please read this guide carefully prior to using the phone to be able to use your phone to its greatest advantage and to prevent any accidental damage or misuse. Any unapproved changes or modifications will void your warranty.

FCC Part 15 Class B Compliance

This device and its accessories comply with part 15 of FCC rules. Operation is subject to the following two conditions: (1) This device and its accessories may not cause harmful interference, and (2) this device and its accessories must accept any interference received, including interference that causes undesired operation.

Information to User

This equipment has been tested and found to comply with the limits for a Class B digital device, pursuant to part 15 of the FCC Rules. These limits are designed to provide reasonable protection against harmful interference in a residential installation.

This equipment generates, uses and can radiate radio frequency energy and, if not installed and used in accordance with the instructions, may cause harmful interference to radio communications.

However, there is no guarantee that interference will not occur in a particular installation. If this equipment does cause harmful interference to radio or television reception, which can be determined by turning the equipment off and on, the user is encouraged to try to correct the interference by one or more of the following measures:

- Reorient or relocate the receiving antenna
- Increase the separation between the equipment and receiver
- Connect the equipment into an outlet on a circuit different from that which the receiver is connected.
- Consult the dealer or an experienced radio/TV technician for help.

Modifications not expressly approved by the manufacturer could void the user's authority to

operated the equipment under FCC rules.

Technical Details

The VN210 is an all digital phone that operates on both Code Division Multiple Access (CDMA) frequencies: Cellular services at 800 MHz and Personal Communication Services (PCS) at 1.9 GHz.

CDMA technology uses a feature called DSSS (Direct Sequence Spread Spectrum) that enables the phone to keep communication from being crossed and to use one frequency channel by multiple users in the same specific area. This results in a 10-fold capacity increase when compared with analog mode. In addition, features such as soft / softer handoff, hard handoff, and dynamic RF power control technologies combine to reduce call interruptions.

The Cellular and PCS CDMA networks consist of MSO (Mobile Switching Office), BSC (Base Station Controller), BTS (Base Station Transmission System), and MS (Mobile Station).

* TSB -74: Protocol between an IS-95A system and ANSI J-STD-008

1xRTT system receives twice as many subscribers in the wireless

CDMA Standard	Designator	Description
Basic Air Interface	TIA/EIA-95A TSB-74 ANSI J-STD-008 TIA/EIA-IS2000	CDMA Dual-Mode Air Interface 14.4kbps radio link protocol and inter-band operations IS-95 adapted for PCS frequency band CDMA2000 1xRTT Air Interface
Network	TIA/EIA/IS-634 TIA/EIA/IS-651 TIA/EIA/IS-41-C TIA/EIA/IS-124	MAS-BS PCSC-RS Intersystem operations Non-signaling data comm.
Service	TIA/EIA/IS-96-B TIA/EIA/IS-637 TIA/EIA/IS-657 IS-801 TIA/EIA/IS-707-A	Speech CODEC Short Message Service Packet Data Position Determination Service (gpsOne) High Speed Packet Data

section as IS-95. Its battery life is twice as long as IS-95.

The table on the following page lists some major CDMA standards.

Part 15.105 statement

This equipment has been tested and found to comply with the limits for a class B digital device, pursuant to Part 15 of the FCC rules. These limits are designed to provide reasonable protection against harmful interference in a residential installation. This equipment generates, uses, and can radiate radio frequency energy and, if not installed and used in accordance with the instructions, may cause harmful interference to radio communications. However, there is no guarantee that interference will not occur in a particular installation. If you experience interference with reception (e.g., television), determine if this equipment is causing the harmful interference by turning the equipment off and then back on to see if the interference is affected. If necessary, try correcting the interference by one or more of the following measures:

- Reorient or relocate the receiving antenna.
- Increase the separation between the equipment and receiver.
- Connect the equipment into an outlet on a circuit different from that to which the receiver is connected.
- Consult the dealer or an experienced radio/TV technician for help.

Part 15.21 statement

Changes or modifications that are not expressly approved by the manufacturer could void the user's authority to operate the equipment.

FCC RF Exposure Information

WARNING! Read this information before operating the phone.

In August 1996, the Federal Communications Commission (FCC) of the United States, with its action in Report and Order FCC 96-326, adopted an updated safety standard for human exposure to Radio Frequency (RF) electromagnetic energy emitted by FCC regulated transmitters. Those guidelines are consistent with the safety standard previously set by both U.S. and international standards bodies. The design of

this phone complies with the FCC guidelines and these international standards.

Caution

Use only the supplied antenna. Use of unauthorized antennas (or modifications to the antenna) could impair call quality, damage the phone, void your warranty and/or violate FCC regulations.

Don't use the phone with a damaged antenna. A damaged antenna could cause a minor skin burn.

Contact your local dealer for a replacement antenna.

Notice: Open Source Software
To obtain the source code under GPL, LGPL, MPL, and other open source licenses, that is contained in this product, please visit http://opensource.lge.com.
In addition to the source code, all referred license terms, warranty disclaimers and copyright notices are available for download.
LG Electronics will also provide open source code to you on CD-ROM for a charge covering the cost of performing such distribution (such as the cost of media, shipping, and handling) upon email request to opensource@lge.com. This offer is valid for three (3) years from the date on which you purchased the product.

Terminology

EZ Tip Calculator

Feature for easy bill calculation using the total cost, tip, and number of people as variables.

Advanced Voice Recognition

Feature that allows you to perform a wide range of verbal commands by training the phone to recognize your individual speech patterns.

Bluetooth® wireless technology

Technology used to allow mobile phones, computers, and other personal devices to be easily coordinated and interconnected using a short-range wireless connection.

Media Center

Feature that accesses the Internet to provide the ability to access and even download a wide variety of software, information, and more right on your LG Verizon wireless phone.

Acronyms and Abbreviations

DTMF

Dual-Tone Multi Frequency (or "touch-tone") is a method used to communicate keys pressed on the phone. Pressing a key generates two simultaneous tones, one for the row and one for the column to determine which key was pressed.

ERI

Enhanced Roaming Indicator is a feature to indicate whether a mobile phone is on its home system, a partner network, or a roaming network. Many phones indicate home vs. roaming as an icon, but ERI capable phones can clearly indicate third "partner network" status.

GPS

Global Positioning System is a system of satellites, computers, and receivers able to determine the latitude and longitude of a specific receiver on Earth. Position is calculated using time and distance.

IS 2000

Type of digital signaling. It's the second generation of CDMA digital

cellular, an extension of IS-95. Differences between signaling types have to do with pilot signal and links to provide more traffic channels, and control protocols.

NAM

Number Assignment Module is how the phone stores the phone number and its electronic serial number.

SSL

Secure Sockets Layer Protocol used to encrypt data sent over the air.

TTY

Teletypewriter. An electromechanical typewriter that either transmits or receives messages coded in electrical signals. A phone with TTY support is able to translate typed characters to voice or translate voice into characters to display on the TTY.

Numbers

3-way call 16
10 Driver Safety Tips 107

A

Accessibility 48
Acronyms and Abbreviations 117
Adding Another Phone Number 21
Add New Device 57
Airplane Mode 66
Alarm Clock 54
Alert Sounds 61
All 39
Answer Options 71
Apps 42
Assisted Dialing 74
Auto Retry 72
Avoid potential hearing loss. 90

B

Backlight 64
Backup Assistant 25
Banner 63
Battery Charge Level 13
Battery Temperature Protection 13
Bluetooth® Menu 57
Brightness 64

C

Calculator 52
Calendar 54
Caller ID 16
Call Forwarding 72
Call Settings 71
Call Sounds 60
Call Waiting 15
Changing Saved Information 21
Changing the Default Number 21
Charging the Battery 12
Charging with USB 13
Consumer Information About Radio Frequency Emissions 83
Consumer Information on SAR 87
Contact List 24
Contacts 24
Contacts in Your Phone's Memory 19
Customizing Individual Entries 19

D

Data Roaming Access 71
Deleting 22
Dialed 39
Discovery Mode 59
Display Settings 62
Display Themes 64
Drafts 33
Driving 107
DTMF Tones 74

E

Easy Set-up 60, 62
Eco-Calculator 53
Entering and Editing Information 18
Erasing Messages 37
Ez Tip Calculator 53

F

Favorites 25
FCC Hearing-Aid Compatibility (HAC) Regulations for Wireless Devices 88

FDA Consumer Update 99
Font Size 66
Font Type 65

G

Getting Started with Your Phone 12
Glossary 117
Groups 25

H

Hearing Assist 62

I

Icon Glossary 75
Important Safety Precautions 78
Inbox 31
In Case of Emergency (ICE) 27
Info Search 55
Installing the Battery 12
Internal Clock 66
Internet 41, 42

K

Keypad Volume 61

L

Language 67
LIMITED WARRANTY STATEMENT 110
Location 68

M

Main Menu Settings 65
Making Calls 13
Master Volume 48
Media Center 42
Memory 75
Menus Overview 9
Messaging 29
Messaging Settings 35
Missed 38
Mobile Email 34, 47
Mute Function 15
My Name Card 28
My Number 75
My Phone Info 59
My Pictures 45, 47
My Ringtones 44
My Sounds 44
My Verizon 48

N

NAM Select 71
New Contact 24
New Message 29
Notepad 56

O

One Touch Dial 74

P

Phone Info 75
Phone Overview 7
Phone Settings 66
Pictures 45

Q

Quick Access to Convenient Features 15
Quick Font Resize 15
Quick Volume Adjustment 15

R

Received 38
Receiving Calls 14
Recent Calls 38
Redialing Calls 14
Removing the Battery 12

S

Safety 81
Safety Information 94
Screen Icons 14
Security 68
Sent 33
Service Alerts 61
Set Shortcut Keys 67
Settings & Tools 48
Set-up Wizard 77
Signal Strength 13
Social Networks 35
Software Update 76
Sounds Off 15
Sounds Settings 60
Speed Dial 19
Speed Dialing 22
Speed Dials 26
Stopwatch 56
Storing a Number with Pauses 20
Storing Basics 19
Supported Profiles 60
SW/HW Version 75
System Select 70

T

Take Picture 46
Technical Details 113
Terminology 117
Text Input 18
TIA Safety Information 91
Tools 50
TTY Mode 72
Tunes & Tones 43
Turning the Phone On and Off 13

V

Vibrate Mode 15
View Timers 39
Voice Commands 16, 50, 67
Voice mail 34
Voice Privacy 74

W

Wallpaper 64
World Clock 56

MEMO