20140326_SystemPerformanceCheck-D750V3 SN 1024

Frequency: 750 MHz; Duty Cycle: 1:1; Room Ambient Temperature: 24.0°C; Liquid Temperature: 23.0°C
Medium parameters used: f = 750 MHz; σ = 0.897 S/m; ε_r = 41.126; ρ = 1000 kg/m^3
DASY5 Configuration:
- Area Scan Setting: Find Secondary Maximum Within: 2.0 dB and with a peak SAR value greater than 0.0012W/kg
- Averaged Fast SAR: Polynomial fit
- Electronics: DAE4 Sn1239; Calibrated: 4/9/2013
- Probe: EX3DV4 - SN3871; ConvF(10.02, 10.02, 10.02); Calibrated: 7/29/2013;
- Sensor-Surface: 2.5mm (Mechanical Surface Detection)
- Phantom: SAM v5.0 (B); Type: QD000P40CD; Serial: 1628

Head/Pin=100 mW/Area Scan (61x61x1): Interpolated grid: dx=1.500 mm, dy=1.500 mm

Reference Value = 33.421 V/m; Power Drift = 0.02 dB
Fast SAR: SAR(1 g) = 0.858 W/kg; SAR(10 g) = 0.584 W/kg
Maximum value of SAR (interpolated) = 1.01 W/kg

Head/Pin=100 mW/Zoom Scan (7x7x7)/Cube 0: Measurement grid: dx=5mm, dy=5mm, dz=5mm

Reference Value = 33.421 V/m; Power Drift = 0.02 dB
Peak SAR (extrapolated) = 1.27 W/kg
SAR(1 g) = 0.831 W/kg; SAR(10 g) = 0.542 W/kg
Maximum value of SAR (measured) = 1.02 W/kg

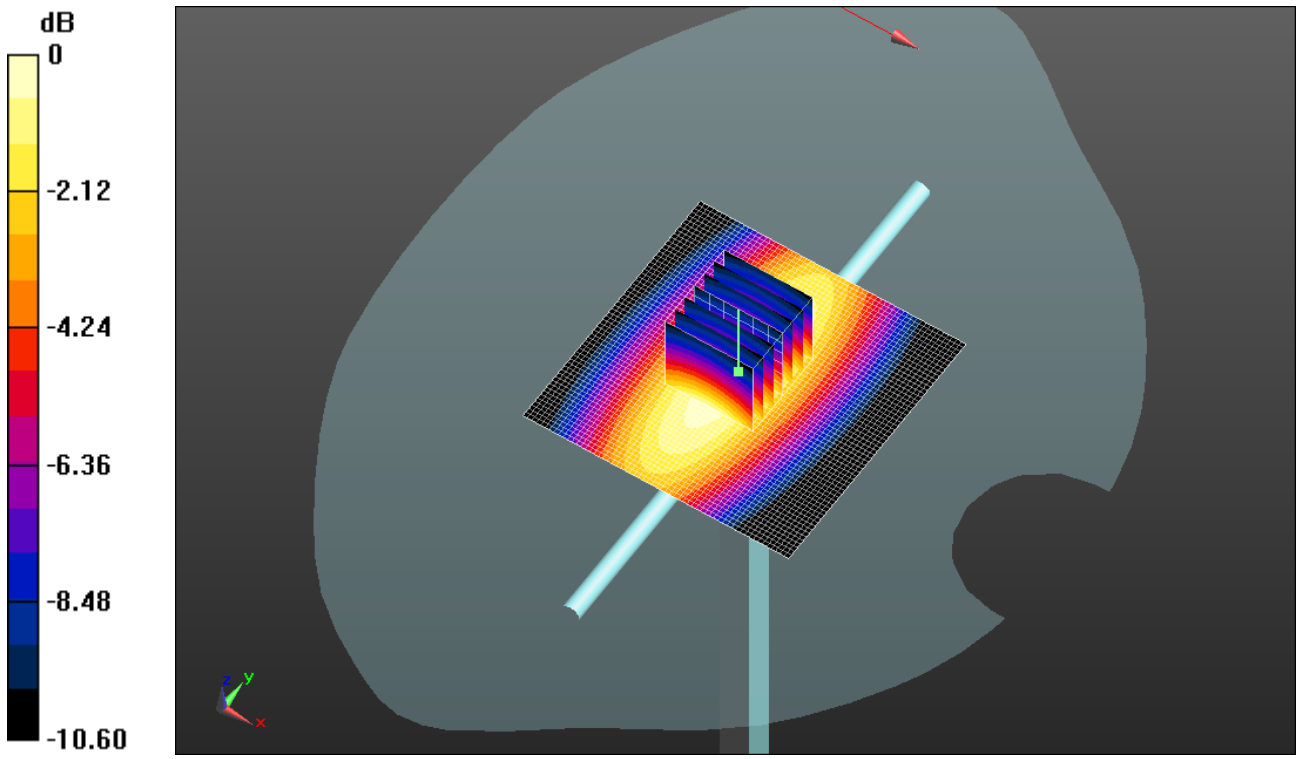

0 dB = 1.02 W/kg = 0.09 dBW/kg

20140326_SystemPerformanceCheck-D750V3 SN 1024

Frequency: 750 MHz; Duty Cycle: 1:1

Head/Pin=100 mW/Z Scan (1x1x21): Measurement grid: dx=20mm, dy=20mm, dz=5mm
Maximum value of SAR (measured) = 0.985 W/kg

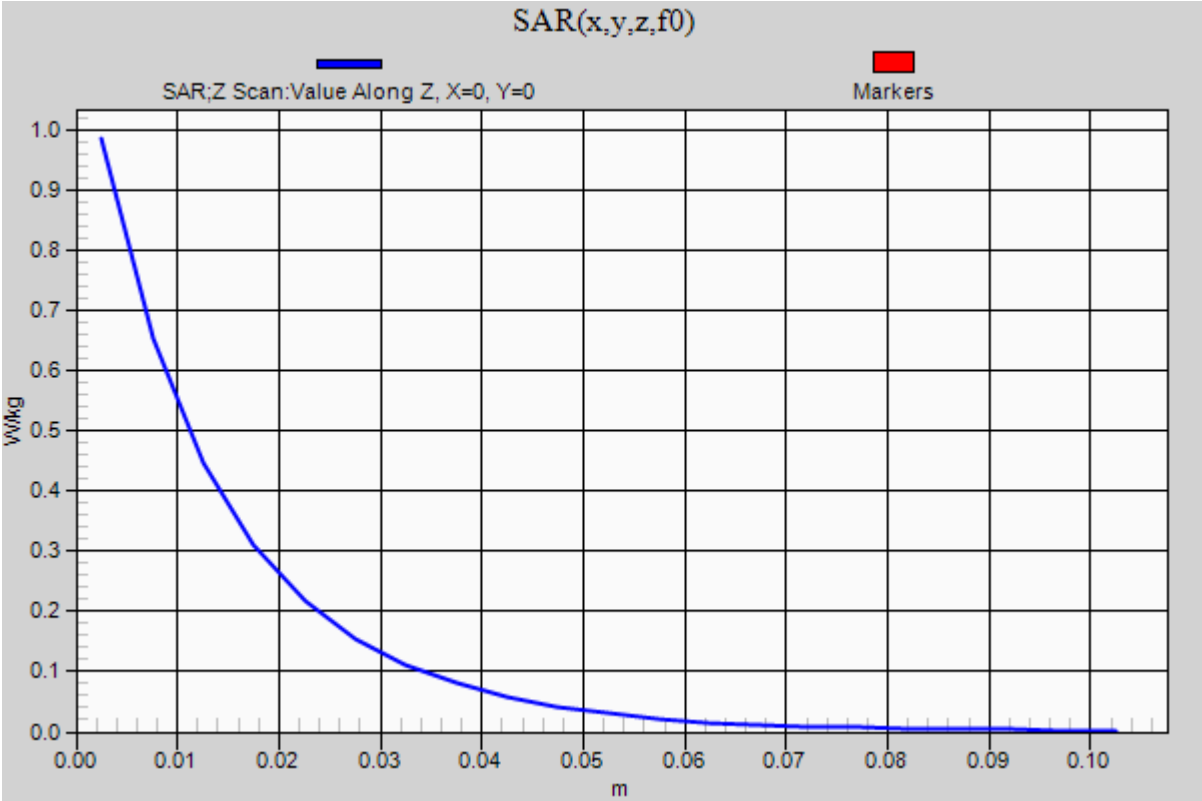

20140324_SystemPerformanceCheck-D835V2 SN 4d117

Frequency: 835 MHz; Duty Cycle: 1:1; Room Ambient Temperature: 24.0°C; Liquid Temperature: 23.0°C
Medium parameters used: f = 835 MHz; σ = 0.916 S/m; ε_r = 41.772; ρ = 1000 kg/m^3
DASY5 Configuration:
- Area Scan Setting: Find Secondary Maximum Within: 2.0 dB and with a peak SAR value greater than 0.0012W/kg
- Averaged Fast SAR: Polynomial fit
- Electronics: DAE4 Sn1352; Calibrated: 9/11/2013
- Probe: EX3DV4 - SN3749; ConvF(8.85, 8.85, 8.85); Calibrated: 1/29/2014;
- Sensor-Surface: 2.5mm (Mechanical Surface Detection)
- Phantom: SAM; Type: QD000P40CD; Serial: 1629

Head/Pin=100 mW/Area Scan (61x61x1): Interpolated grid: dx=1.500 mm, dy=1.500 mm

Reference Value = 36.940 V/m; Power Drift = 0.00 dB
Fast SAR: SAR(1 g) = 1.04 W/kg; SAR(10 g) = 0.697 W/kg
Maximum value of SAR (interpolated) = 1.23 W/kg

Head/Pin=100 mW/Zoom Scan (7x7x7)/Cube 0: Measurement grid: dx=5mm, dy=5mm, dz=5mm

Reference Value = 36.940 V/m; Power Drift = 0.00 dB
Peak SAR (extrapolated) = 1.49 W/kg
SAR(1 g) = 1 W/kg; SAR(10 g) = 0.658 W/kg
Maximum value of SAR (measured) = 1.22 W/kg

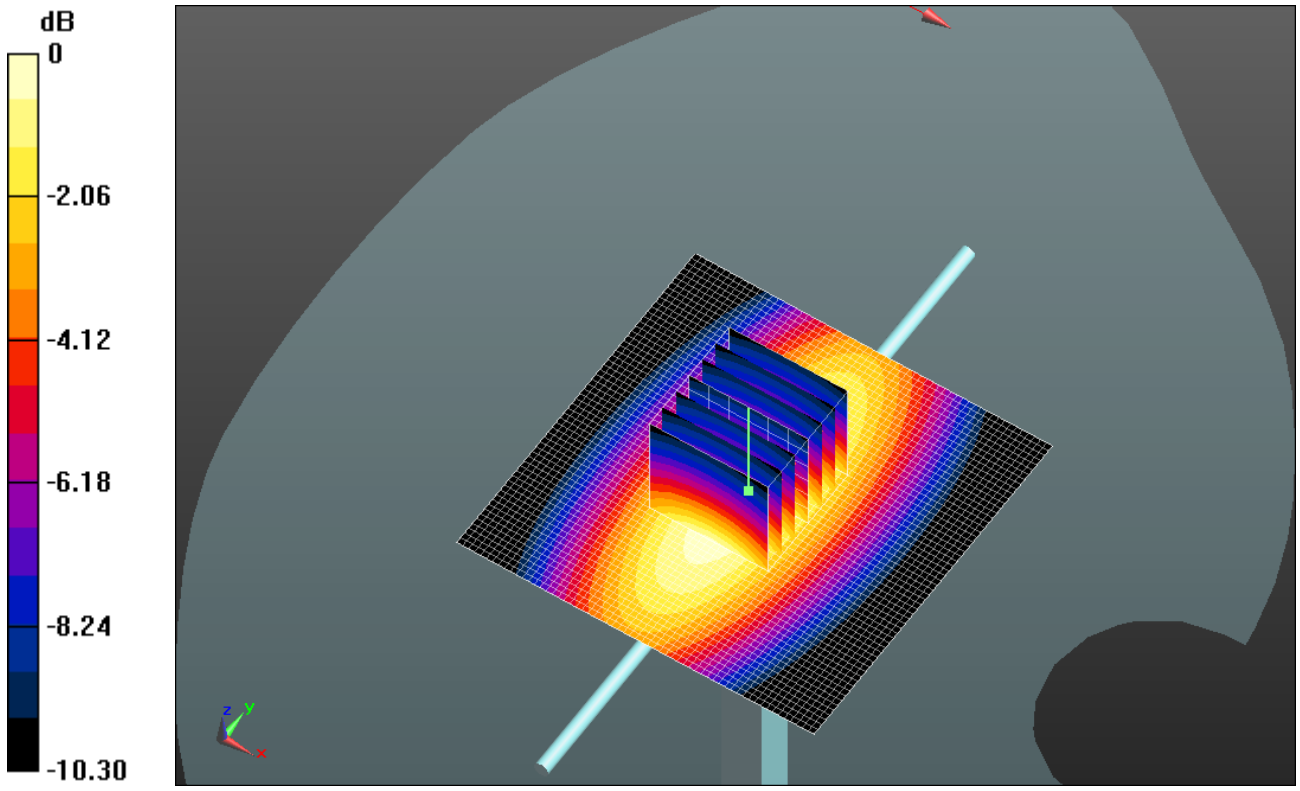

0 dB = 1.22 W/kg = 0.86 dBW/kg

20140324_SystemPerformanceCheck-D835V2 SN 4d117

Frequency: 835 MHz; Duty Cycle: 1:1

Head/Pin=100 mW/Z Scan (1x1x21): Measurement grid: dx=20mm, dy=20mm, dz=5mm
Maximum value of SAR (measured) = 1.22 W/kg

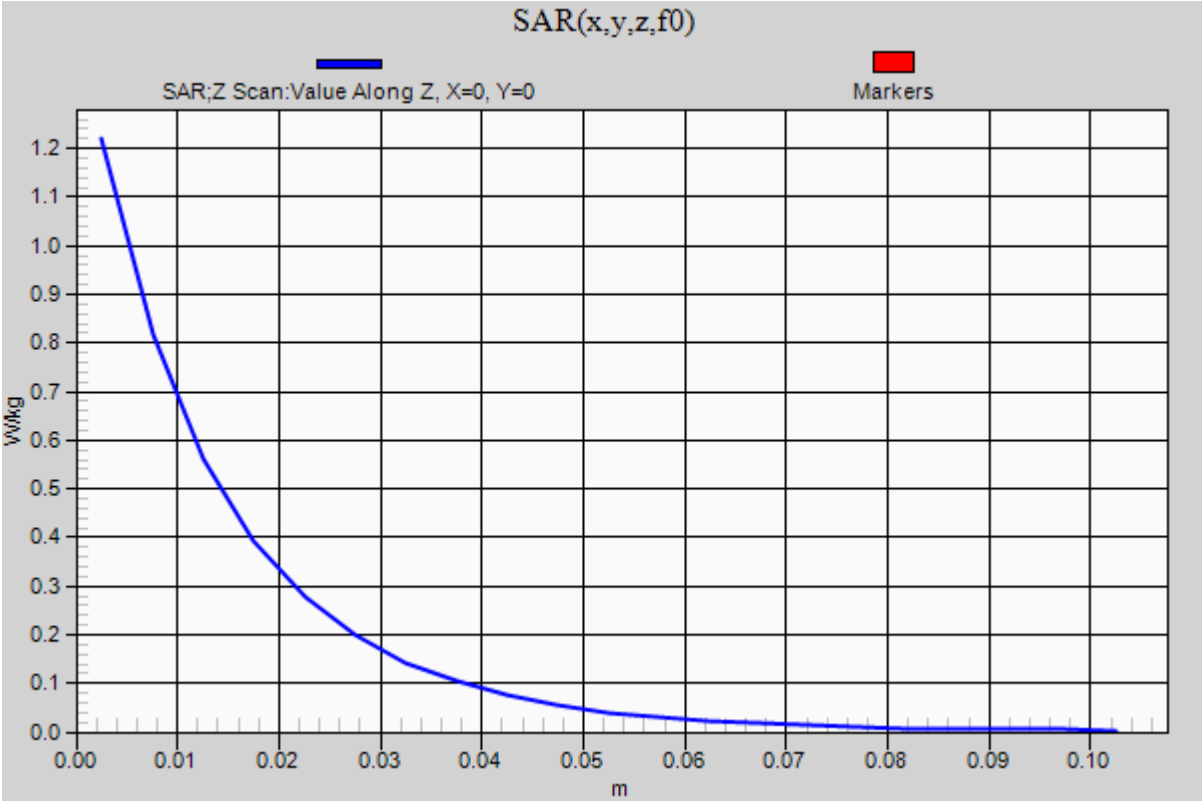

20140321_SystemPerformanceCheck-D835V2 SN 4d117

Frequency: 835 MHz; Duty Cycle: 1:1; Room Ambient Temperature: 24.0°C; Liquid Temperature: 23.0°C
Medium parameters used: f = 835 MHz; σ = 1.008 S/m; ε_r = 52.738; ρ = 1000 kg/m^3
DASY5 Configuration:
- Area Scan Setting: Find Secondary Maximum Within: 2.0 dB and with a peak SAR value greater than 0.0012W/kg
- Averaged Fast SAR: Polynomial fit
- Electronics: DAE4 Sn1259; Calibrated: 1/23/2014
- Probe: EX3DV4 - SN3772; ConvF(8.59, 8.59, 8.59); Calibrated: 2/26/2014;
- Sensor-Surface: 2.5mm (Mechanical Surface Detection)
- Phantom: ELI A v5.0; Type: QDOVA002AA; Serial: TP:xxxx

Body/Pin=100 mW/Area Scan (61x61x1): Interpolated grid: dx=1.500 mm, dy=1.500 mm

Reference Value = 32.978 V/m; Power Drift = 0.05 dB
Fast SAR: SAR(1 g) = 0.915 W/kg; SAR(10 g) = 0.613 W/kg
Maximum value of SAR (interpolated) = 1.09 W/kg

Body/Pin=100 mW/Zoom Scan (7x7x7)/Cube 0: Measurement grid: dx=5mm, dy=5mm, dz=5mm

Reference Value = 32.978 V/m; Power Drift = 0.05 dB
Peak SAR (extrapolated) = 1.32 W/kg
SAR(1 g) = 0.900 W/kg; SAR(10 g) = 0.594 W/kg
Maximum value of SAR (measured) = 1.09 W/kg

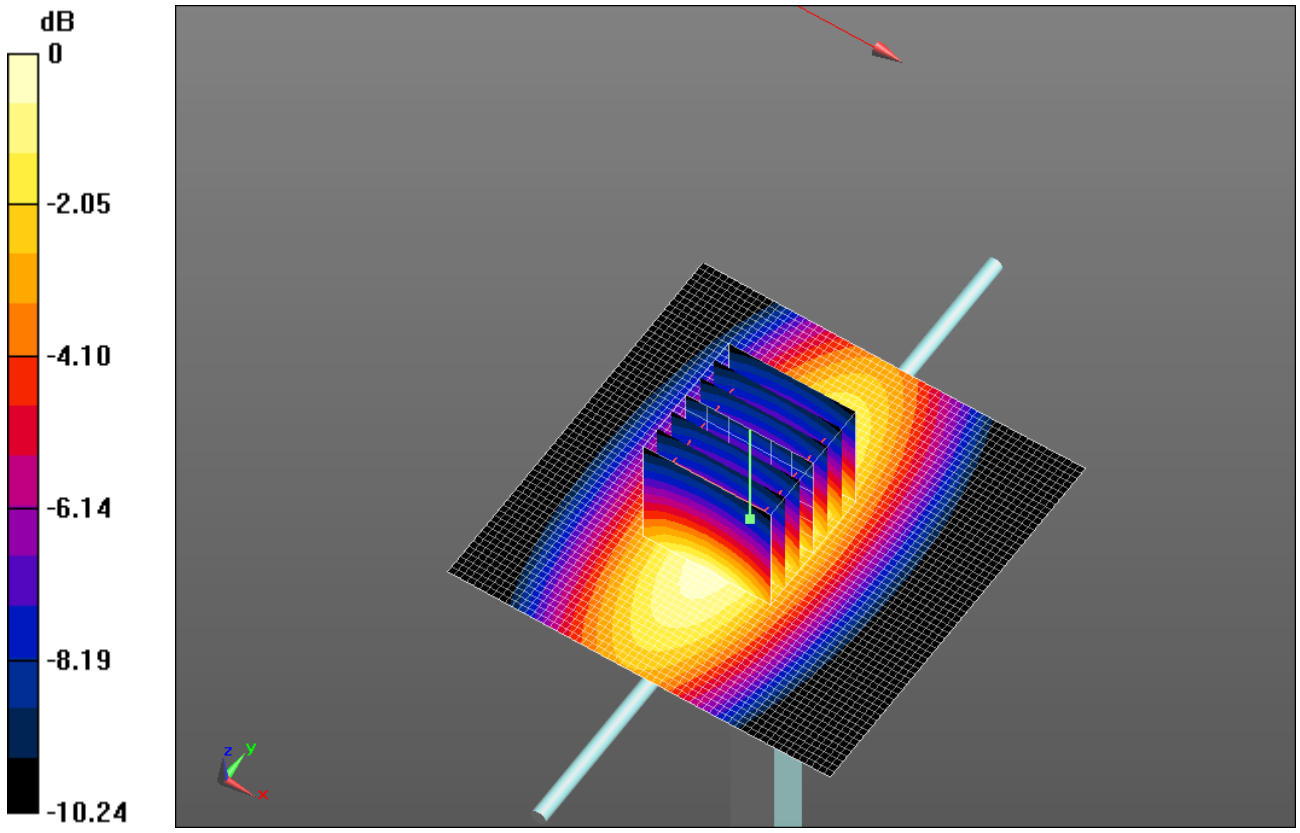

0 dB = 1.09 W/kg = 0.37 dBW/kg

20140321_SystemPerformanceCheck-D835V2 SN 4d117

Frequency: 835 MHz; Duty Cycle: 1:1

Body/Pin=100 mW/Z Scan (1x1x21): Measurement grid: dx=20mm, dy=20mm, dz=5mm
Maximum value of SAR (measured) = 1.07 W/kg

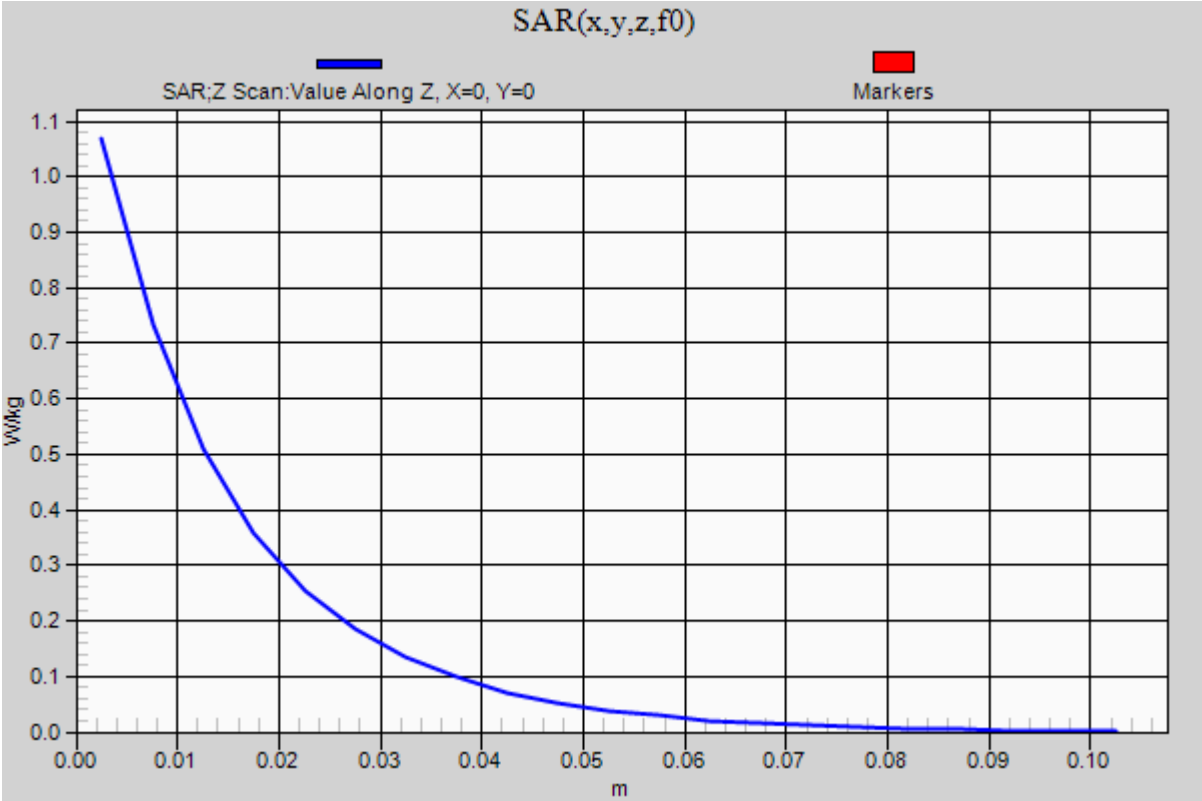

20140325_SystemPerformanceCheck-D5GHzV2 SN 1003

Frequency: 5800 MHz; Duty Cycle: 1:1; Room Ambient Temperature: 24.0°C; Liquid Temperature: 23.0°C
Medium parameters used: f = 5800 MHz; σ = 6.262 S/m; ε_r = 49.86; ρ = 1000 kg/m^3
DASY5 Configuration:
- Area Scan Setting: Find Secondary Maximum Within: 2.0 dB and with a peak SAR value greater than 0.0012W/kg
- Averaged Fast SAR: Polynomial fit
- Electronics: DAE4 Sn1259; Calibrated: 1/23/2014
- Probe: EX3DV4 - SN3772; ConvF(3.85, 3.85, 3.85); Calibrated: 2/26/2014;
- Sensor-Surface: 1.4mm (Mechanical Surface Detection)
- Phantom: New ELI B v5.0; Type: QDOVA002AA; Serial: TP:xxxx

Body/5.8 GHz, Pin=100mW/Area Scan (61x61x1): Interpolated grid: dx=1.000 mm, dy=1.000 mm
Reference Value = 51.453 V/m; Power Drift = -0.12 dB
Fast SAR: SAR(1 g) = 7.6 W/kg; SAR(10 g) = 2.05 W/kg
Maximum value of SAR (interpolated) = 21.6 W/kg

Body/5.8 GHz, Pin=100mW/Zoom Scan (8x8x7)/Cube 0: Measurement grid: dx=4mm, dy=4mm, dz=1.4mm
Reference Value = 51.453 V/m; Power Drift = -0.12 dB
Peak SAR (extrapolated) = 37.1 W/kg
SAR(1 g) = 7.92 W/kg; SAR(10 g) = 2.2 W/kg
Maximum value of SAR (measured) = 19.4 W/kg

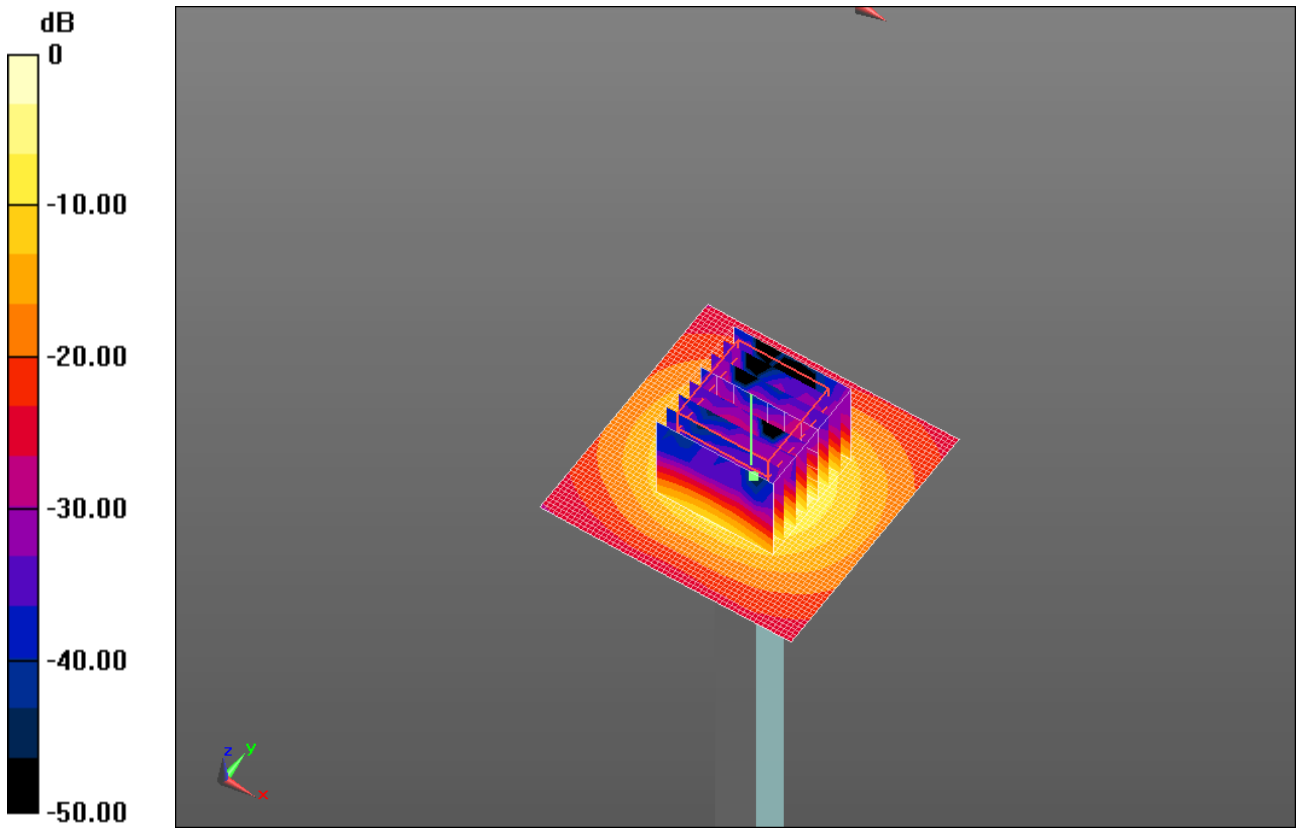

0 dB = 19.4 W/kg = 12.88 dBW/kg

20140325_SystemPerformanceCheck-D5GHzV2 SN 1003

Frequency: 5800 MHz; Duty Cycle: 1:1

Body/5.8 GHz, Pin=100mW/Z Scan (1x1x21): Measurement grid: dx=20mm, dy=20mm, dz=5mm
Maximum value of SAR (measured) = 14.1 W/kg

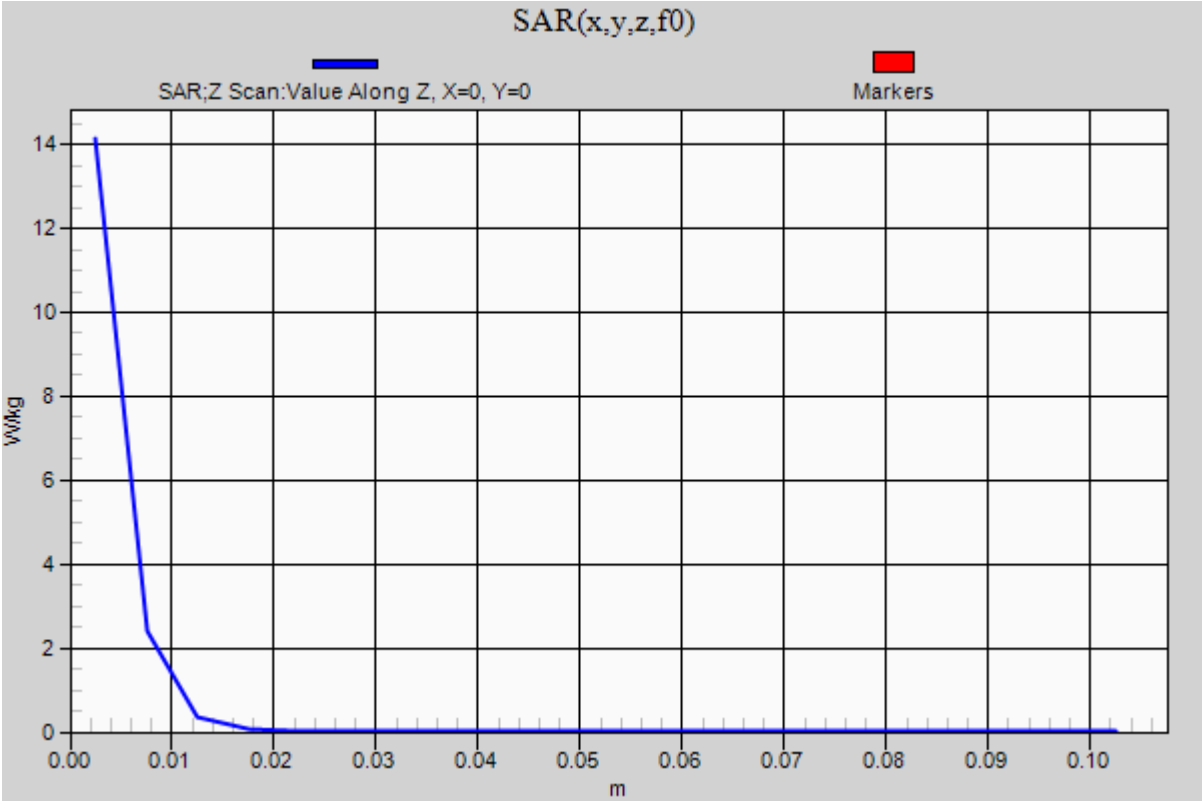

20140327_SystemPerformanceCheck-D1750V2 SN 1077

Frequency: 1750 MHz; Duty Cycle: 1:1; Room Ambient Temperature: 24.0°C; Liquid Temperature: 23.0°C
Medium parameters used: f = 1750 MHz; σ = 1.371 S/m; ε_r = 40.673; ρ = 1000 kg/m^3
DASY5 Configuration:
- Area Scan Setting: Find Secondary Maximum Within: 2.0 dB and with a peak SAR value greater than 0.0012W/kg
- Averaged Fast SAR: Polynomial fit
- Electronics: DAE4 Sn1259; Calibrated: 1/23/2014
- Probe: EX3DV4 - SN3772; ConvF(7.45, 7.45, 7.45); Calibrated: 2/26/2014;
- Sensor-Surface: 2.5mm (Mechanical Surface Detection)
- Phantom: SAM v5.0 ; Type: QD000P40CD; Serial: 1742

Head/Pin=100 mW/Area Scan (61x61x1): Interpolated grid: dx=1.500 mm, dy=1.500 mm

Reference Value = 53.519 V/m; Power Drift = 0.10 dB
Fast SAR: SAR(1 g) = 3.78 W/kg; SAR(10 g) = 2.04 W/kg
Maximum value of SAR (interpolated) = 5.01 W/kg

Head/Pin=100 mW/Zoom Scan (7x7x7)/Cube 0: Measurement grid: dx=5mm, dy=5mm, dz=5mm

Reference Value = 53.519 V/m; Power Drift = 0.10 dB
Peak SAR (extrapolated) = 6.79 W/kg
SAR(1 g) = 3.69 W/kg; SAR(10 g) = 1.97 W/kg
Maximum value of SAR (measured) = 4.96 W/kg

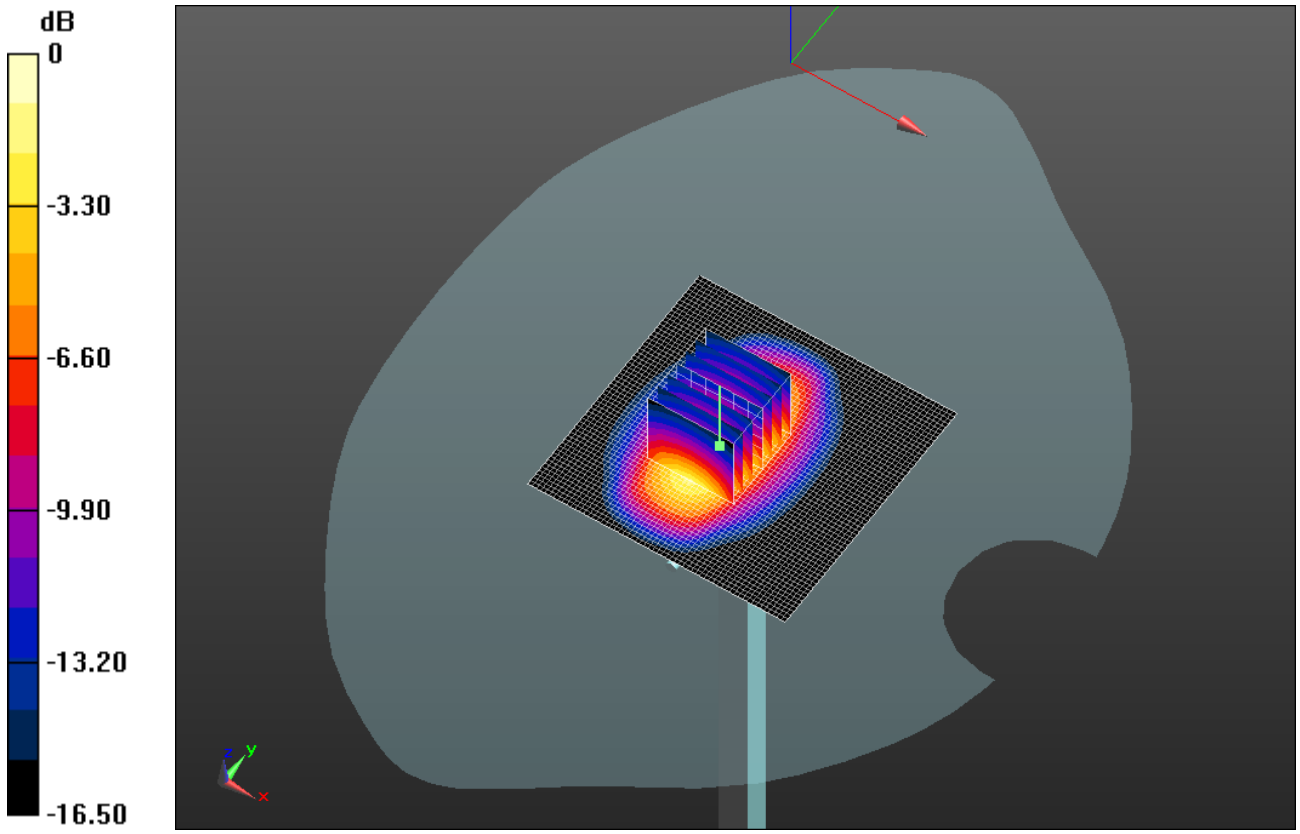

0 dB = 4.96 W/kg = 6.95 dBW/kg

20140327_SystemPerformanceCheck-D1750V2 SN 1077

Frequency: 1750 MHz; Duty Cycle: 1:1

Head/Pin=100 mW/Z Scan (1x1x21): Measurement grid: dx=20mm, dy=20mm, dz=5mm
Maximum value of SAR (measured) = 3.85 W/kg

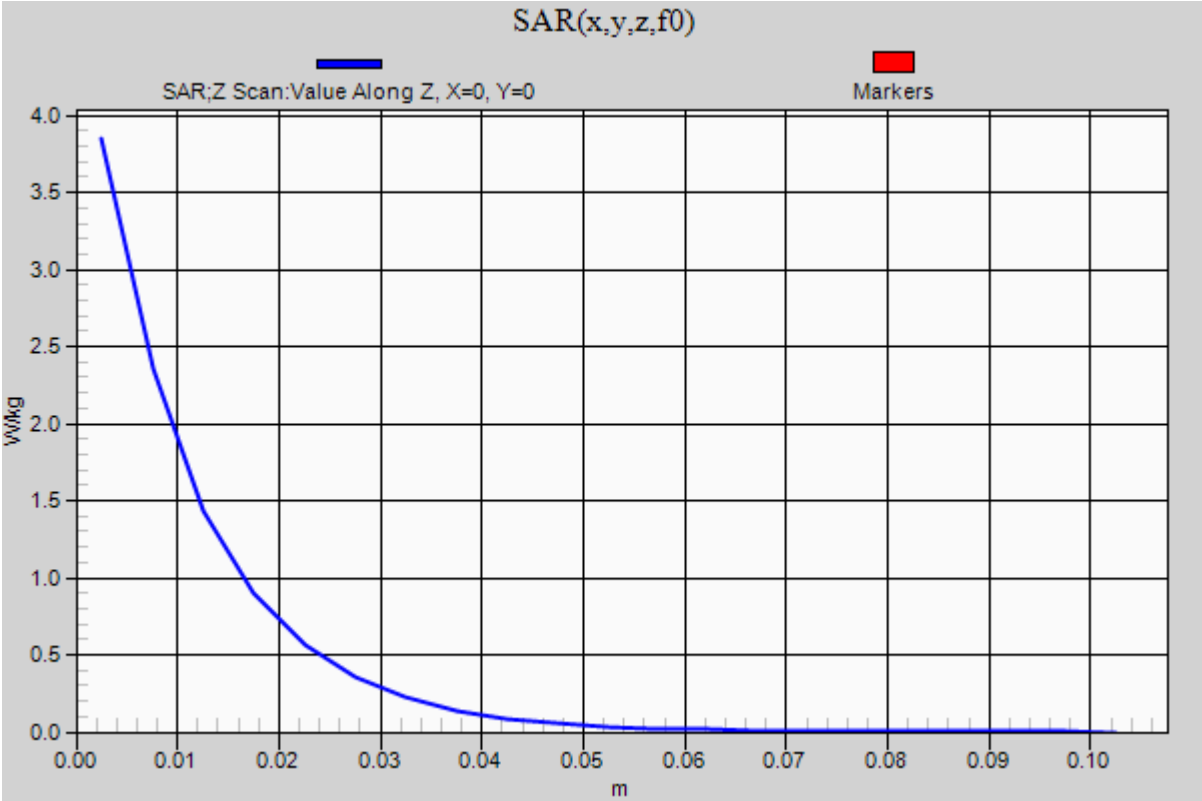

20140320_SystemPerformanceCheck-D2450V2 SN 899

Frequency: 2450 MHz; Duty Cycle: 1:1; Room Ambient Temperature: 24.0°C; Liquid Temperature: 23.0°C
Medium parameters used: f = 2450 MHz; σ = 1.974 S/m; ε_r = 51.987; ρ = 1000 kg/m^3
DASY5 Configuration:
- Area Scan Setting: Find Secondary Maximum Within: 2.0 dB and with a peak SAR value greater than 0.0012W/kg
- Averaged Fast SAR: Polynomial fit
- Electronics: DAE4 Sn1357; Calibrated: 2/17/2014
- Probe: EX3DV4 - SN3901; ConvF(6.97, 6.97, 6.97); Calibrated: 2/25/2014;
- Sensor-Surface: 2.5mm (Mechanical Surface Detection)
- Phantom: ELI v5.0 A; Type: QDOVA002AA; Serial: 1180

Body/Pin=100 mW/Area Scan (71x71x1): Interpolated grid: dx=1.200 mm, dy=1.200 mm
Reference Value = 64.029 V/m; Power Drift = -0.00 dB
Fast SAR: SAR(1 g) = 4.87 W/kg; SAR(10 g) = 2.11 W/kg
Maximum value of SAR (interpolated) = 7.15 W/kg

Body/Pin=100 mW/Zoom Scan (7x7x7)/Cube 0: Measurement grid: dx=5mm, dy=5mm, dz=5mm
Reference Value = 64.029 V/m; Power Drift = -0.00 dB
Peak SAR (extrapolated) = 10.2 W/kg
SAR(1 g) = 4.87 W/kg; SAR(10 g) = 2.26 W/kg
Maximum value of SAR (measured) = 6.95 W/kg

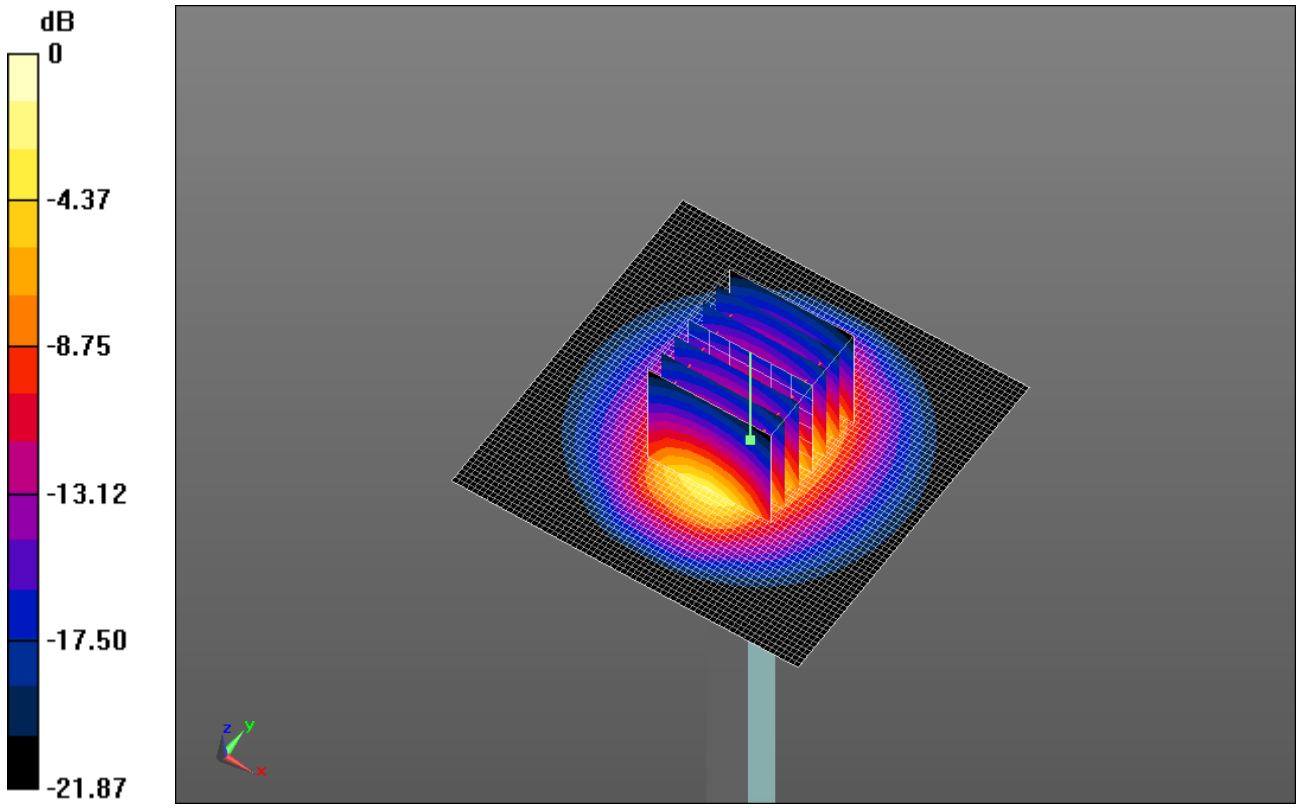

0 dB = 6.95 W/kg = 8.42 dBW/kg

20140320_SystemPerformanceCheck-D2450V2 SN 899

Frequency: 2450 MHz; Duty Cycle: 1:1

Body/Pin=100 mW/Z Scan (1x1x21): Measurement grid: dx=20mm, dy=20mm, dz=5mm
Maximum value of SAR (measured) = 6.69 W/kg

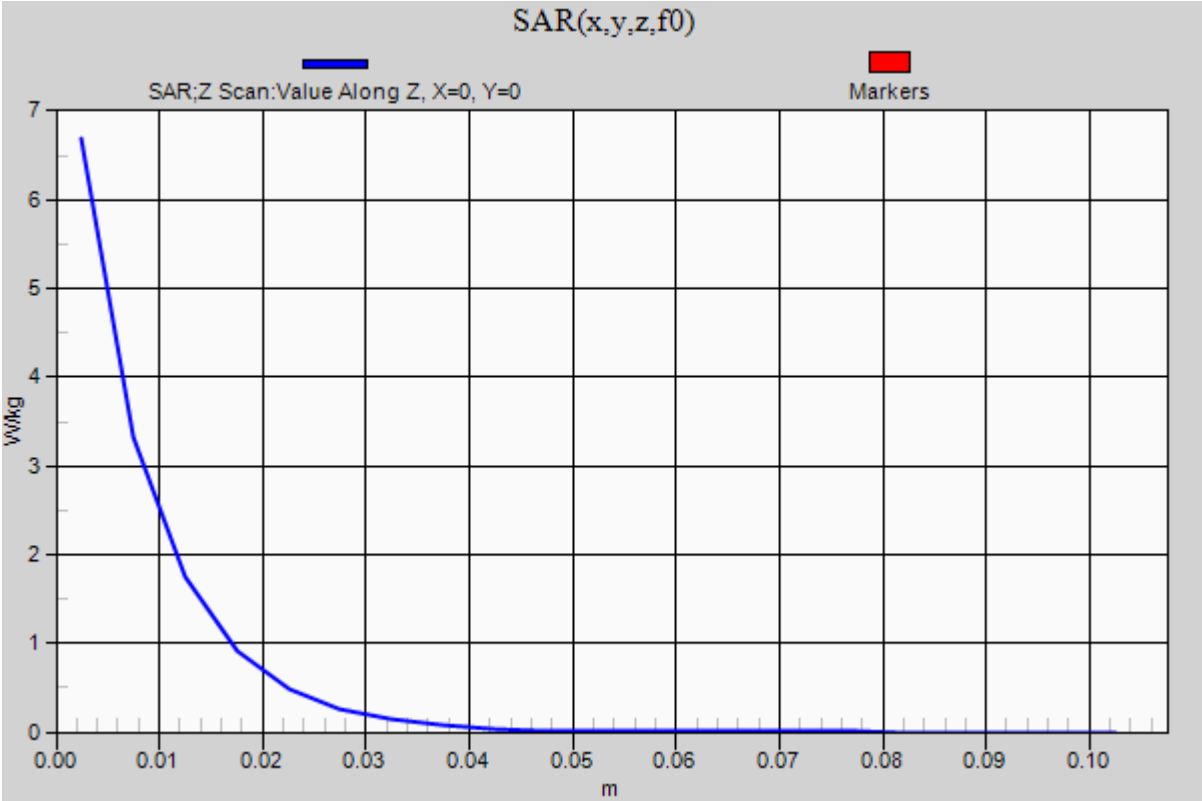

SystemPerformanceCheck-D1900V2 SN 5d140

Frequency: 1900 MHz; Duty Cycle: 1:1; Room Ambient Temperature: 24.0°C; Liquid Temperature: 23.0°C
Medium parameters used: f = 1900 MHz; σ = 1.527 S/m; ε_r = 52.068; ρ = 1000 kg/m^3
DASY5 Configuration:
- Area Scan Setting: Find Secondary Maximum Within: 2.0 dB and with a peak SAR value greater than 0.0012W/kg
- Averaged Fast SAR: Polynomial fit
- Electronics: DAE4 Sn1343; Calibrated: 7/24/2013
- Probe: EX3DV4 - SN3885; ConvF(7.37, 7.37, 7.37); Calibrated: 9/18/2013;
- Sensor-Surface: 2.5mm (Mechanical Surface Detection)
- Phantom: ELI v5.0 (A); Type: QDOVA001BB; Serial: 1117

Body/Pin=100 mW/Area Scan (61x61x1): Interpolated grid: dx=1.500 mm, dy=1.500 mm
Reference Value = 58.668 V/m; Power Drift = 0.06 dB
Fast SAR: SAR(1 g) = 3.97 W/kg; SAR(10 g) = 2 W/kg
Maximum value of SAR (interpolated) = 5.32 W/kg

Body/Pin=100 mW/Zoom Scan (7x7x7)/Cube 0: Measurement grid: dx=5mm, dy=5mm, dz=5mm
Reference Value = 58.668 V/m; Power Drift = 0.06 dB
Peak SAR (extrapolated) = 7.14 W/kg
SAR(1 g) = 3.99 W/kg; SAR(10 g) = 2.11 W/kg
Maximum value of SAR (measured) = 5.35 W/kg

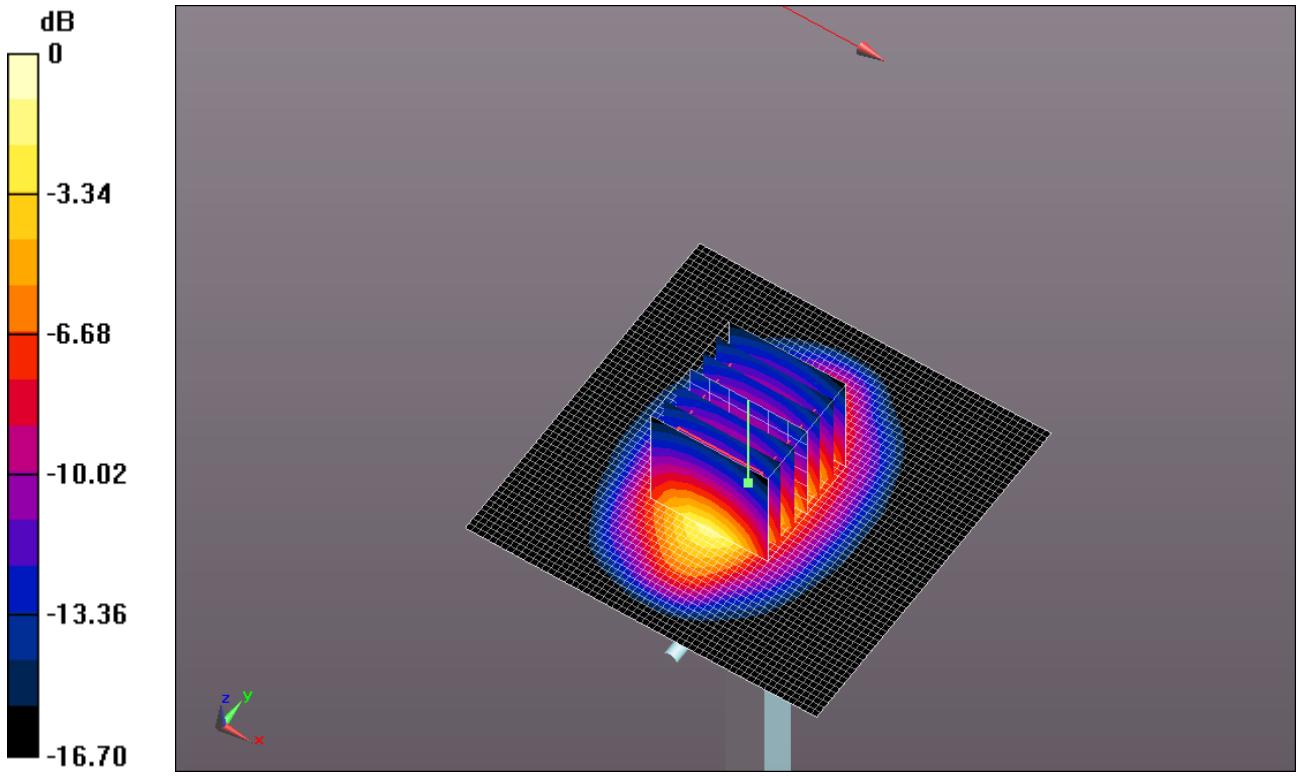

0 dB = 5.35 W/kg = 7.28 dBW/kg

SystemPerformanceCheck-D1900V2 SN 5d140

Frequency: 1900 MHz; Duty Cycle: 1:1

Body/Pin=100 mW/Z Scan (1x1x21): Measurement grid: dx=20mm, dy=20mm, dz=5mm
Maximum value of SAR (measured) = 5.18 W/kg

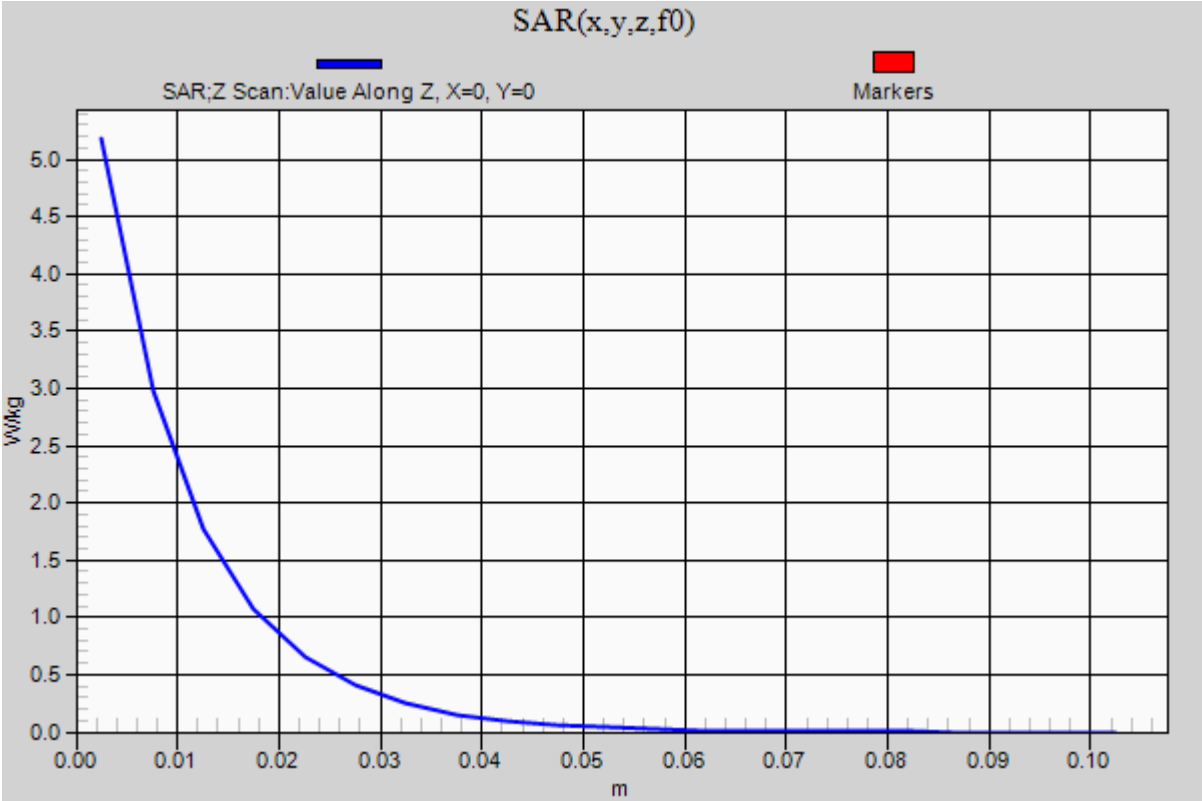

SystemPerformanceCheck-D750V3 SN 1024

Frequency: 750 MHz; Duty Cycle: 1:1; Room Ambient Temperature: 24.0°C; Liquid Temperature: 23.0°C
Medium parameters used: f = 750 MHz; σ = 0.963 S/m; ε_r = 53.505; ρ = 1000 kg/m^3
DASY5 Configuration:
- Area Scan Setting: Find Secondary Maximum Within: 2.0 dB and with a peak SAR value greater than 0.0012W/kg
- Averaged Fast SAR: Polynomial fit
- Electronics: DAE4 Sn1343; Calibrated: 7/24/2013
- Probe: EX3DV4 - SN3885; ConvF(9.14, 9.14, 9.14); Calibrated: 9/18/2013;
- Sensor-Surface: 2.5mm (Mechanical Surface Detection (Locations From Previous Scan Used)), Sensor-Surface: 2.5mm (Mechanical Surface Detection)
- Phantom: ELI v5.0 (A); Type: QDOVA001BB; Serial: 1117

Body/Pin=100 mW/Area Scan (61x61x1): Interpolated grid: dx=1.500 mm, dy=1.500 mm
Reference Value = 33.097 V/m; Power Drift = 0.03 dB
Fast SAR: SAR(1 g) = 0.881 W/kg; SAR(10 g) = 0.597 W/kg
Maximum value of SAR (interpolated) = 1.04 W/kg

Body/Pin=100 mW/Zoom Scan (7x7x7)/Cube 0: Measurement grid: dx=5mm, dy=5mm, dz=5mm
Reference Value = 33.097 V/m; Power Drift = 0.03 dB
Peak SAR (extrapolated) = 1.27 W/kg
SAR(1 g) = 0.866 W/kg; SAR(10 g) = 0.576 W/kg
Maximum value of SAR (measured) = 1.05 W/kg

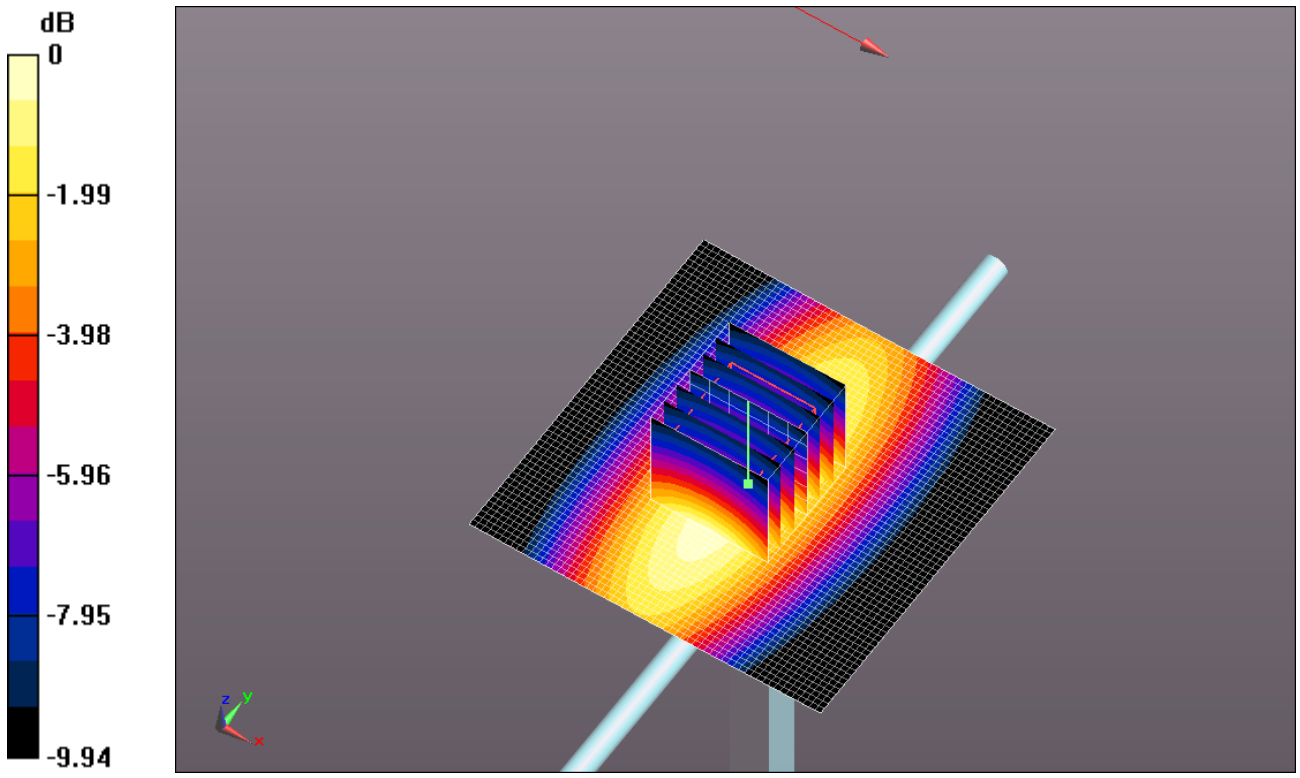

0 dB = 1.05 W/kg = 0.21 dBW/kg

SystemPerformanceCheck-D750V3 SN 1024

Frequency: 750 MHz; Duty Cycle: 1:1

Body/Pin=100 mW/Z Scan (1x1x21): Measurement grid: dx=20mm, dy=20mm, dz=5mm
Maximum value of SAR (measured) = 1.03 W/kg

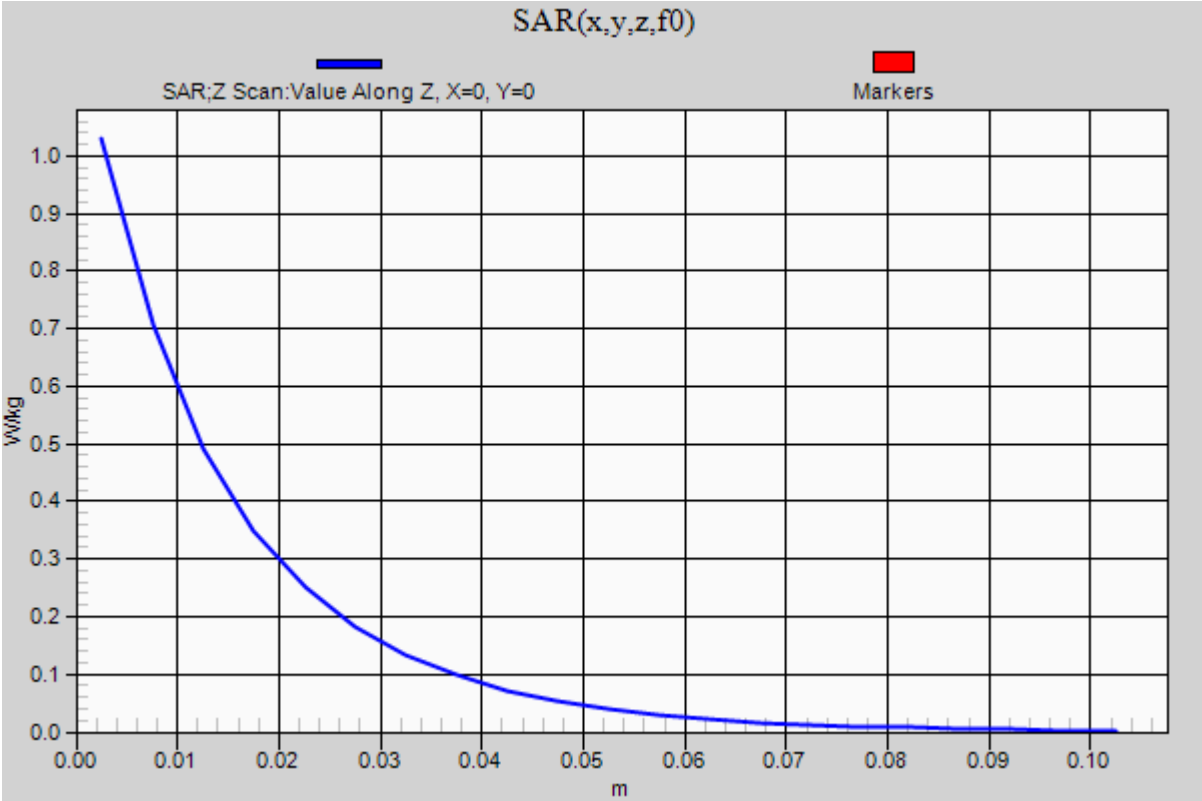

SystemPerformanceCheck-D1750V2 SN 1077

Frequency: 1750 MHz; Duty Cycle: 1:1; Room Ambient Temperature: 24.0°C; Liquid Temperature: 23.0°C
Medium parameters used: f = 1750 MHz; σ = 1.436 S/m; ε_r = 52.441; ρ = 1000 kg/m^3
DASY5 Configuration:
- Area Scan Setting: Find Secondary Maximum Within: 2.0 dB and with a peak SAR value greater than 0.0012W/kg
- Averaged Fast SAR: Polynomial fit
- Electronics: DAE4 Sn1343; Calibrated: 7/24/2013
- Probe: EX3DV4 - SN3885; ConvF(7.59, 7.59, 7.59); Calibrated: 9/18/2013;
- Sensor-Surface: 2.5mm (Mechanical Surface Detection)
- Phantom: ELI v5.0 (B); Type: QDOVA001BB; Serial: 1118

Body/Pin=100 mW/Area Scan (61x61x1): Interpolated grid: dx=1.500 mm, dy=1.500 mm
Reference Value = 60.313 V/m; Power Drift = -0.01 dB
Fast SAR: SAR(1 g) = 3.91 W/kg; SAR(10 g) = 2.04 W/kg
Maximum value of SAR (interpolated) = 5.13 W/kg

Body/Pin=100 mW/Zoom Scan (7x7x7)/Cube 0: Measurement grid: dx=5mm, dy=5mm, dz=5mm
Reference Value = 60.313 V/m; Power Drift = -0.01 dB
Peak SAR (extrapolated) = 6.81 W/kg
SAR(1 g) = 3.84 W/kg; SAR(10 g) = 2.06 W/kg
Maximum value of SAR (measured) = 5.13 W/kg

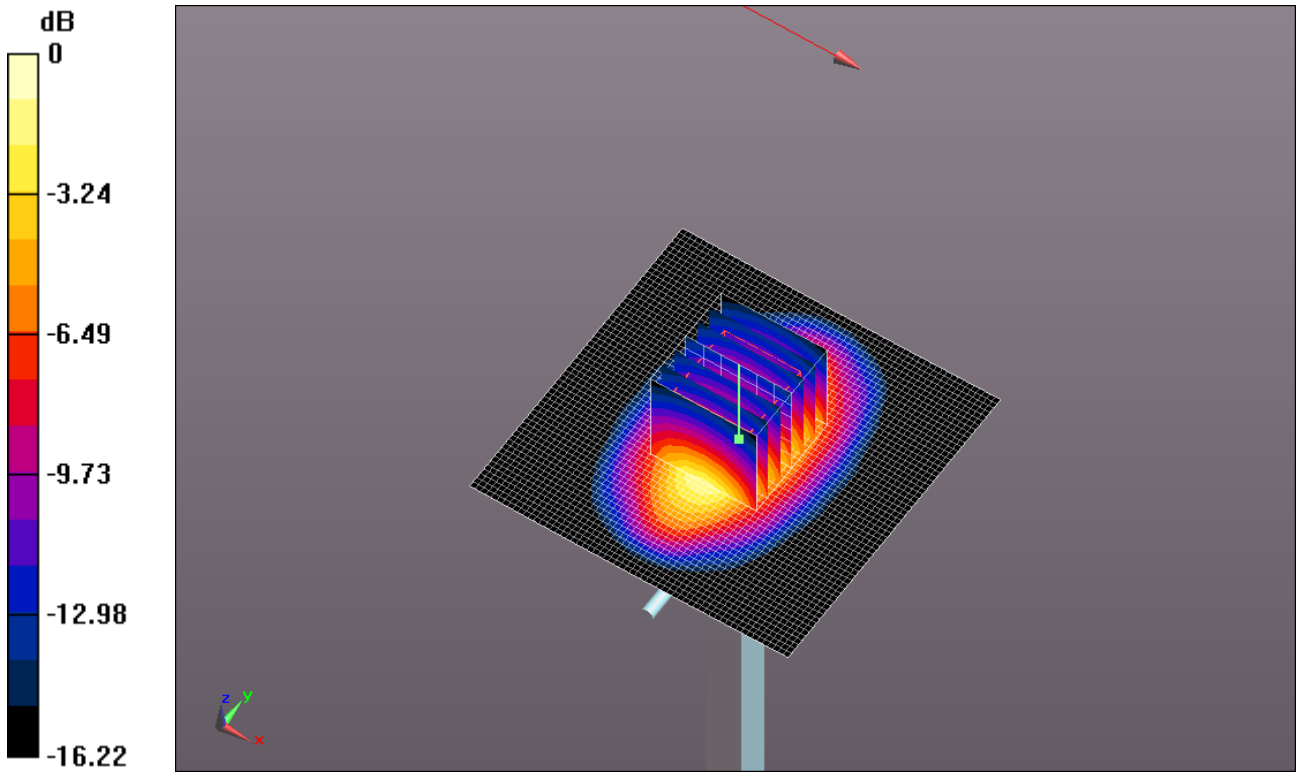

0 dB = 5.13 W/kg = 7.10 dBW/kg

SystemPerformanceCheck-D1750V2 SN 1077

Frequency: 1750 MHz; Duty Cycle: 1:1

Body/Pin=100 mW/Z Scan (1x1x21): Measurement grid: dx=20mm, dy=20mm, dz=5mm
Maximum value of SAR (measured) = 5.11 W/kg

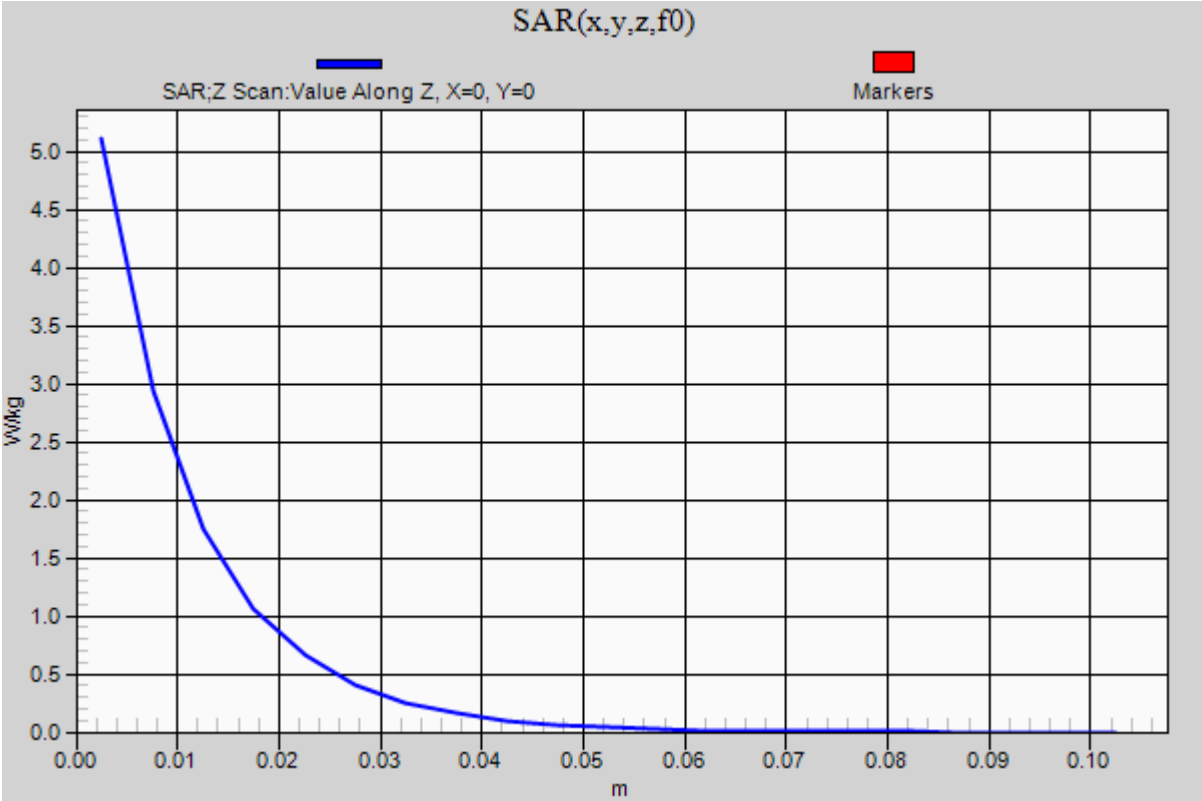

SystemPerformanceCheck-D5GHzV2 SN 1003

Frequency: 5800 MHz; Duty Cycle: 1:1; Room Ambient Temperature: 24.0°C; Liquid Temperature: 23.0°C
Medium parameters used: f = 5800 MHz; σ = 5.251 S/m; ε_r = 36.401; ρ = 1000 kg/m^3
DASY5 Configuration:
- Area Scan Setting: Find Secondary Maximum Within: 2.0 dB and with a peak SAR value greater than 0.0012W/kg
- Averaged Fast SAR: Polynomial fit
- Electronics: DAE4 Sn1343; Calibrated: 7/24/2013
- Probe: EX3DV4 - SN3885; ConvF(4.4, 4.4, 4.4); Calibrated: 9/18/2013;
- Sensor-Surface: 1.4mm (Mechanical Surface Detection)
- Phantom: SAM with CRP; Type: SAM;

Head/5.8 GHz, Pin=100mW/Area Scan (61x61x1): Interpolated grid: dx=1.000 mm, dy=1.000 mm
Reference Value = 51.016 V/m; Power Drift = 0.00 dB
Fast SAR: SAR(1 g) = 6.9 W/kg; SAR(10 g) = 1.91 W/kg
Maximum value of SAR (interpolated) = 19.1 W/kg

Head/5.8 GHz, Pin=100mW/Zoom Scan (8x8x7)/Cube 0: Measurement grid: dx=4mm, dy=4mm, dz=1.4mm
Reference Value = 51.016 V/m; Power Drift = 0.00 dB
Peak SAR (extrapolated) = 33.9 W/kg
SAR(1 g) = 7.57 W/kg; SAR(10 g) = 2.13 W/kg
Maximum value of SAR (measured) = 18.8 W/kg

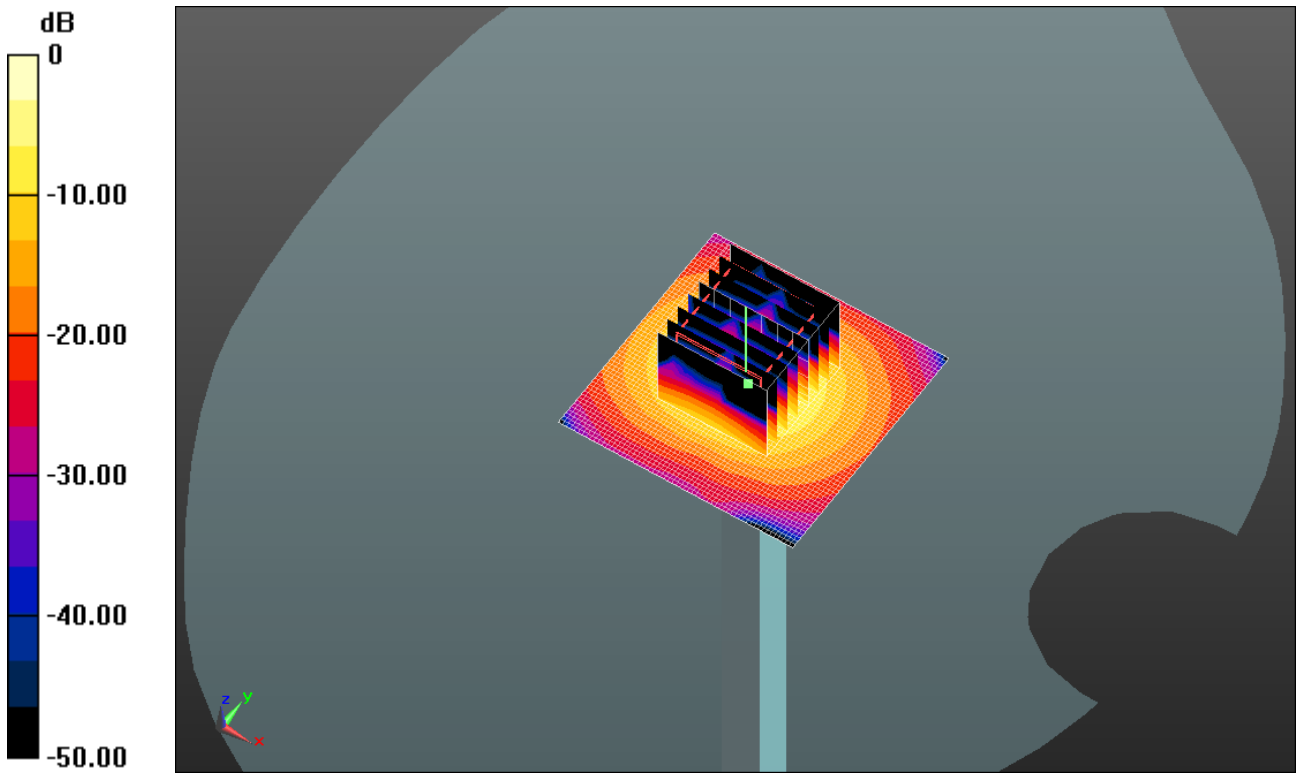

0 dB = 18.8 W/kg = 12.74 dBW/kg

SystemPerformanceCheck-D5GHzV2 SN 1003

Frequency: 5800 MHz; Duty Cycle: 1:1

Head/5.8 GHz, Pin=100mW/Z Scan (1x1x21): Measurement grid: dx=20mm, dy=20mm, dz=5mm
Maximum value of SAR (measured) = 12.2 W/kg

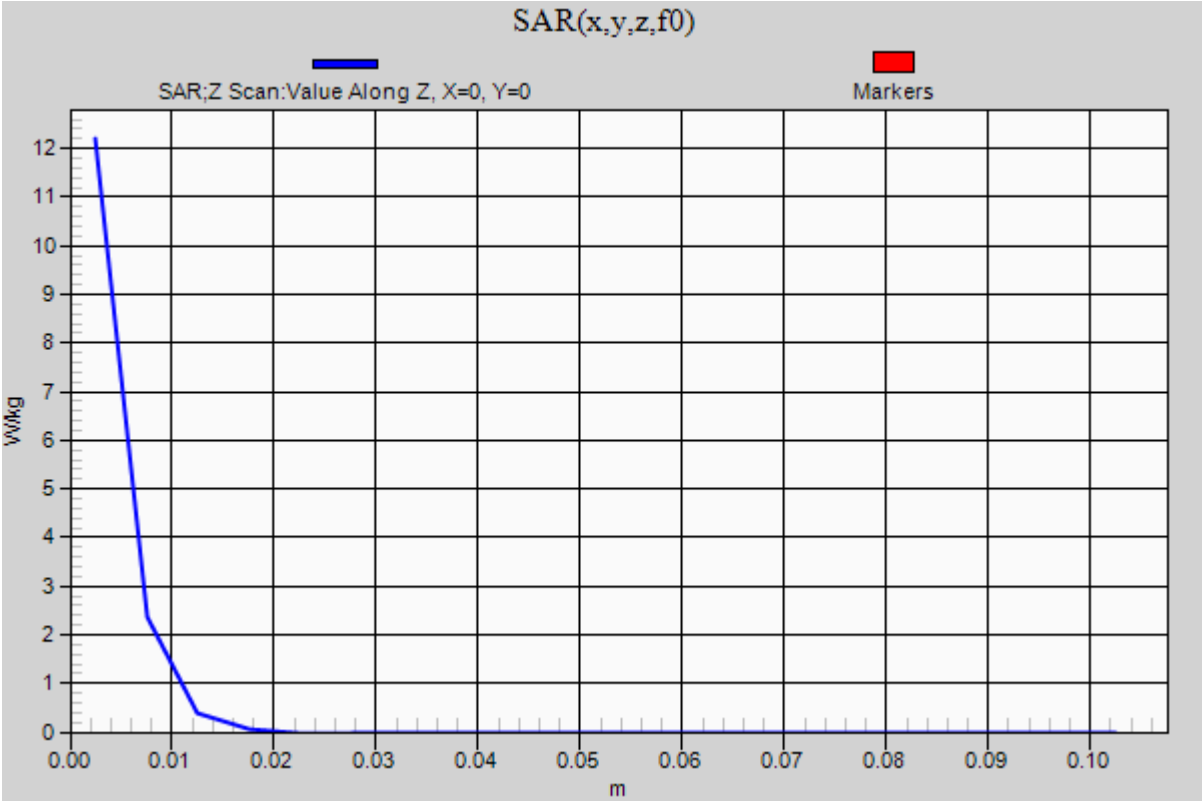

SystemPerformanceCheck-D1900V2 SN 5d043

Frequency: 1900 MHz; Duty Cycle: 1:1; Room Ambient Temperature: 24.0°C; Liquid Temperature: 23.0°C
Medium parameters used: f = 1900 MHz; σ = 1.4 S/m; ε_r = 38.536; ρ = 1000 kg/m^3
DASY5 Configuration:
- Area Scan Setting: Find Secondary Maximum Within: 2.0 dB and with a peak SAR value greater than 0.0012W/kg
- Averaged Fast SAR: Polynomial fit
- Electronics: DAE4 Sn1343; Calibrated: 7/24/2013
- Probe: EX3DV4 - SN3885; ConvF(7.78, 7.78, 7.78); Calibrated: 9/18/2013;
- Sensor-Surface: 2.5mm (Mechanical Surface Detection)
- Phantom: SAM with CRP; Type: SAM;

Head/Pin=100 mW/Area Scan (61x61x1): Interpolated grid: dx=1.500 mm, dy=1.500 mm
Reference Value = 60.394 V/m; Power Drift = -0.08 dB
Fast SAR: SAR(1 g) = 4.17 W/kg; SAR(10 g) = 2.17 W/kg
Maximum value of SAR (interpolated) = 5.56 W/kg

Head/Pin=100 mW/Zoom Scan (7x7x7)/Cube 0: Measurement grid: dx=5mm, dy=5mm, dz=5mm
Reference Value = 60.394 V/m; Power Drift = -0.08 dB
Peak SAR (extrapolated) = 7.61 W/kg
SAR(1 g) = 4.12 W/kg; SAR(10 g) = 2.14 W/kg
Maximum value of SAR (measured) = 5.58 W/kg

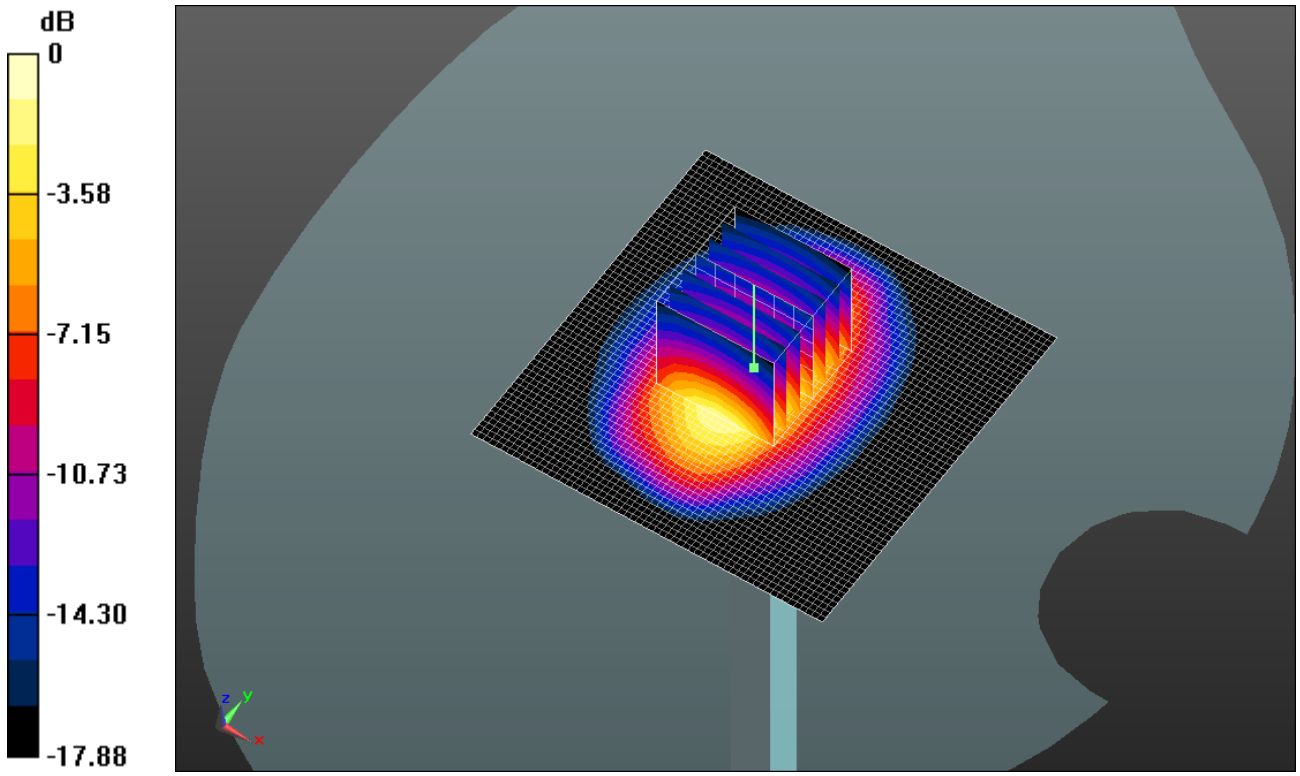

0 dB = 5.58 W/kg = 7.47 dBW/kg

SystemPerformanceCheck-D1900V2 SN 5d043

Frequency: 1900 MHz; Duty Cycle: 1:1

Head/Pin=100 mW/Z Scan (1x1x21): Measurement grid: dx=20mm, dy=20mm, dz=5mm
Maximum value of SAR (measured) = 4.84 W/kg

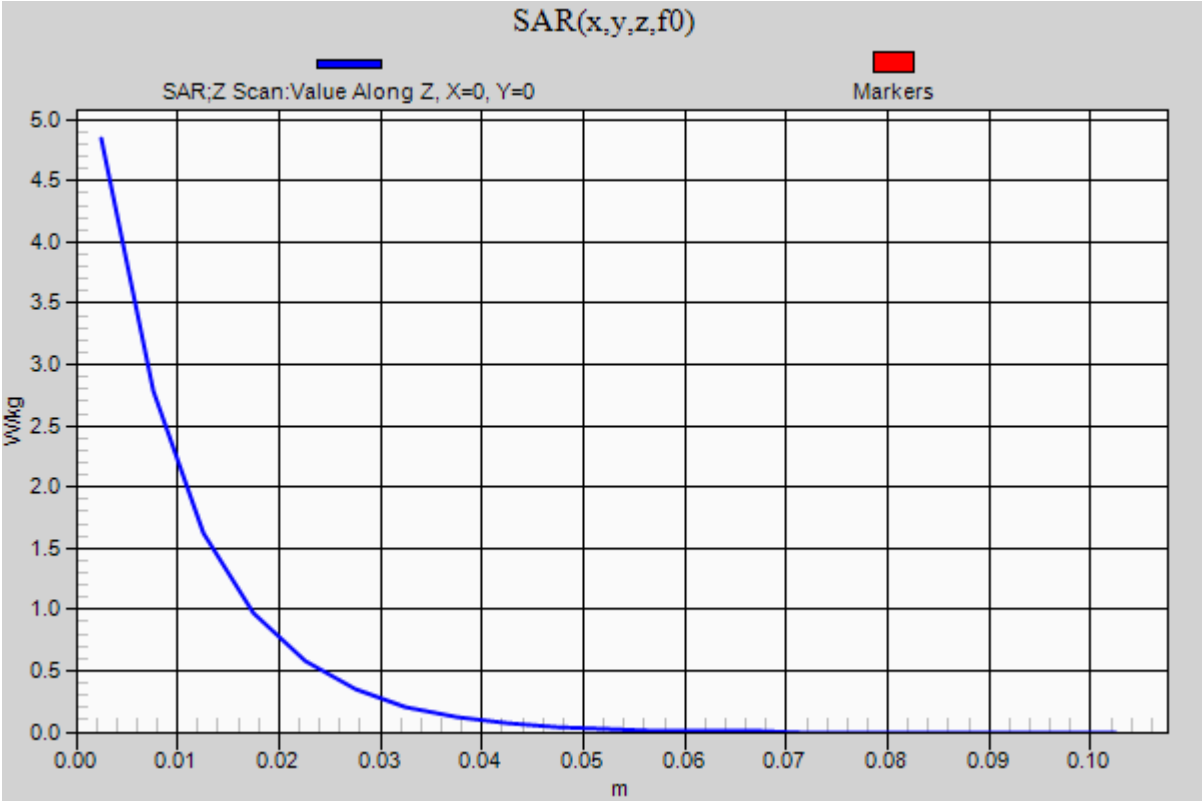

CDMA BC0

Frequency: 836.52 MHz; Duty Cycle: 1:1; Room Ambient Temperature: 24.0°C; Liquid Temperature: 23.0°C
Medium parameters used (interpolated): f = 836.52 MHz; σ = 0.917 S/m; ε_r = 41.757; ρ = 1000 kg/m^3
DASY5 Configuration:
- Area Scan Setting: Find Secondary Maximum Within: 2.0 dB and with a peak SAR value greater than 0.0012W/kg
- Electronics: DAE4 Sn1352; Calibrated: 9/11/2013
- Probe: EX3DV4 - SN3749; ConvF(8.85, 8.85, 8.85); Calibrated: 1/29/2014;
- Sensor-Surface: 2.5mm (Mechanical Surface Detection)
- Phantom: SAM; Type: QD000P40CD; Serial: 1629

LHS/Touch_1xEV-DO_Rel. 0_Ch.384/Area Scan (8x13x1): Measurement grid: dx=15mm, dy=15mm
Info: Interpolated medium parameters used for SAR evaluation.
Maximum value of SAR (measured) = 0.444 W/kg

LHS/Touch_1xEV-DO_Rel. 0_Ch.384/Zoom Scan (5x5x7)/Cube 0: Measurement grid: dx=8mm, dy=8mm, dz=5mm
Reference Value = 21.448 V/m; Power Drift = 0.02 dB
Peak SAR (extrapolated) = 0.494 W/kg
SAR(1 g) = 0.409 W/kg; SAR(10 g) = 0.322 W/kg
Info: Interpolated medium parameters used for SAR evaluation.
Maximum value of SAR (measured) = 0.447 W/kg

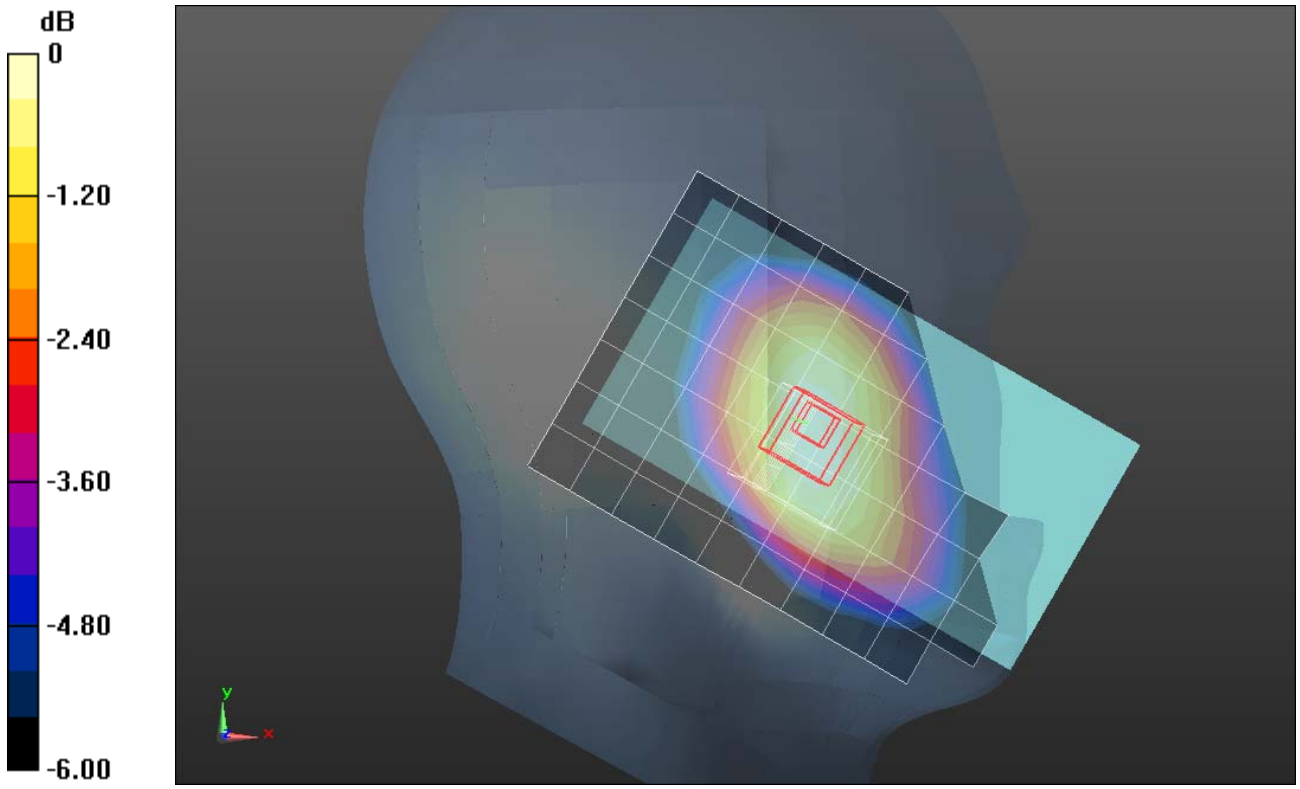

0 dB = 0.447 W/kg = -3.50 dBW/kg

CDMA BC0

Frequency: 848.31 MHz; Duty Cycle: 1:1; Room Ambient Temperature: 24.0°C; Liquid Temperature: 23.0°C
Medium parameters used (interpolated): f = 848.31 MHz; σ = 1.021 S/m; ε_r = 52.6; ρ = 1000 kg/m^3
DASY5 Configuration:
- Area Scan Setting: Find Secondary Maximum Within: 2.0 dB and with a peak SAR value greater than 0.0012W/kg
- Electronics: DAE4 Sn1259; Calibrated: 1/23/2014
- Probe: EX3DV4 - SN3772; ConvF(8.59, 8.59, 8.59); Calibrated: 2/26/2014;
- Sensor-Surface: 2.5mm (Mechanical Surface Detection (Locations From Previous Scan Used)), Sensor-Surface: 2.5mm (Mechanical Surface Detection)
- Phantom: ELI A v5.0; Type: QDOVA002AA; Serial: TP:xxxx

Rear/1xRTT_RC3_SO32_Ch.777/Area Scan (9x13x1): Measurement grid: dx=15mm, dy=15mm

Info: Interpolated medium parameters used for SAR evaluation.
Maximum value of SAR (measured) = 1.08 W/kg

Rear/1xRTT_RC3_SO32_Ch.777/Zoom Scan (5x5x7)/Cube 0: Measurement grid: dx=8mm, dy=8mm, dz=5mm

Reference Value = 32.726 V/m; Power Drift = 0.03 dB
Peak SAR (extrapolated) = 1.49 W/kg
SAR(1 g) = 0.943 W/kg; SAR(10 g) = 0.593 W/kg
Info: Interpolated medium parameters used for SAR evaluation.
Maximum value of SAR (measured) = 1.16 W/kg

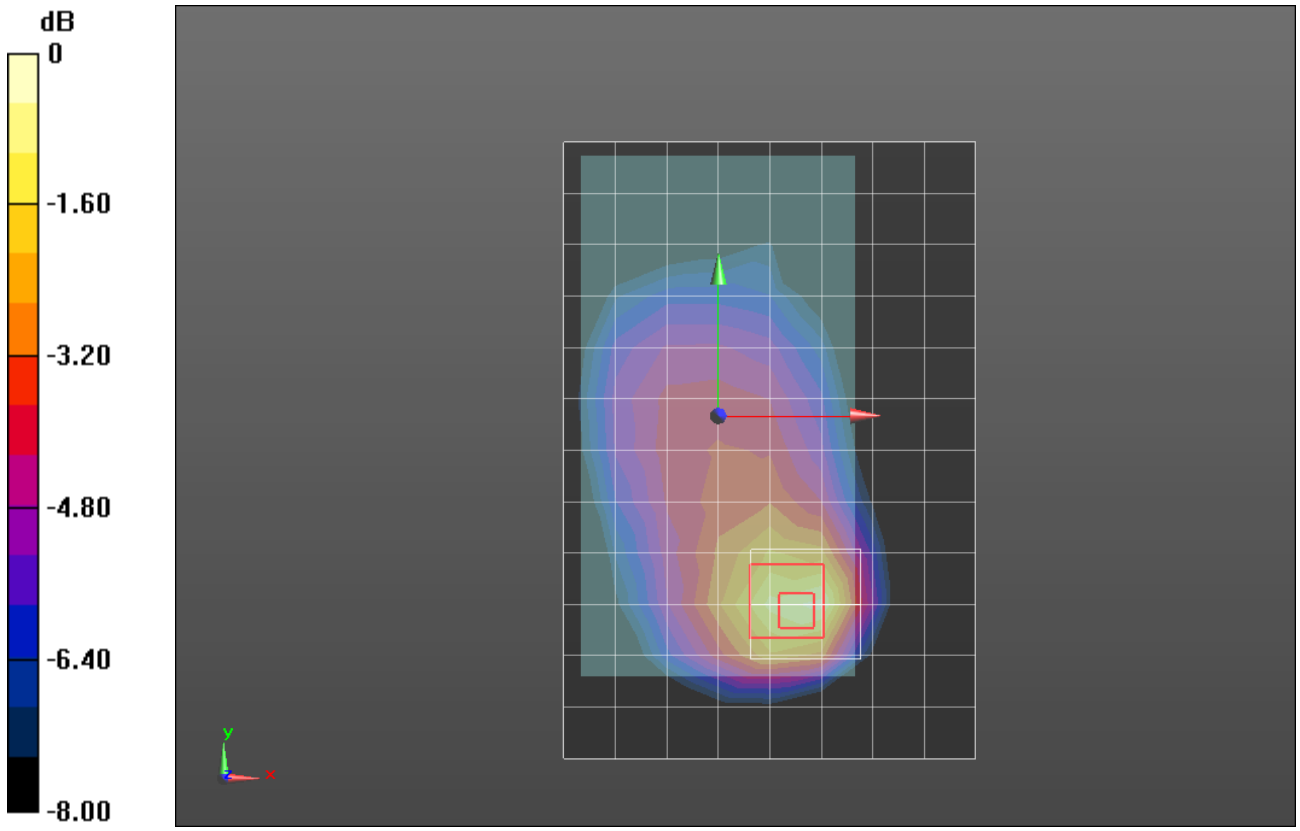

0 dB = 1.16 W/kg = 0.64 dBW/kg

CMDA BC1

Frequency: 1880 MHz; Duty Cycle: 1:1; Room Ambient Temperature: 24.0°C; Liquid Temperature: 23.0°C
Medium parameters used: f = 1880 MHz; σ = 1.383 S/m; ε_r = 38.616; ρ = 1000 kg/m^3
DASY5 Configuration:
- Area Scan Setting: Find Secondary Maximum Within: 2.0 dB and with a peak SAR value greater than 0.0012W/kg
- Electronics: DAE4 Sn1343; Calibrated: 7/24/2013
- Probe: EX3DV4 - SN3885; ConvF(7.78, 7.78, 7.78); Calibrated: 9/18/2013;
- Sensor-Surface: 2.5mm (Mechanical Surface Detection (Locations From Previous Scan Used)), Sensor-Surface: 2.5mm (Mechanical Surface Detection)
- Phantom: SAM with CRP; Type: SAM;

LHS/Touch_1xEvDO_Rel 0_Ch.600/Area Scan (8x13x1): Measurement grid: dx=15mm, dy=15mm
Maximum value of SAR (measured) = 0.384 W/kg

LHS/Touch_1xEvDO_Rel 0_Ch.600/Zoom Scan (5x5x7)/Cube 0: Measurement grid: dx=8mm, dy=8mm, dz=5mm
Reference Value = 16.726 V/m; Power Drift = 0.04 dB
Peak SAR (extrapolated) = 0.480 W/kg
SAR(1 g) = 0.317 W/kg; SAR(10 g) = 0.202 W/kg

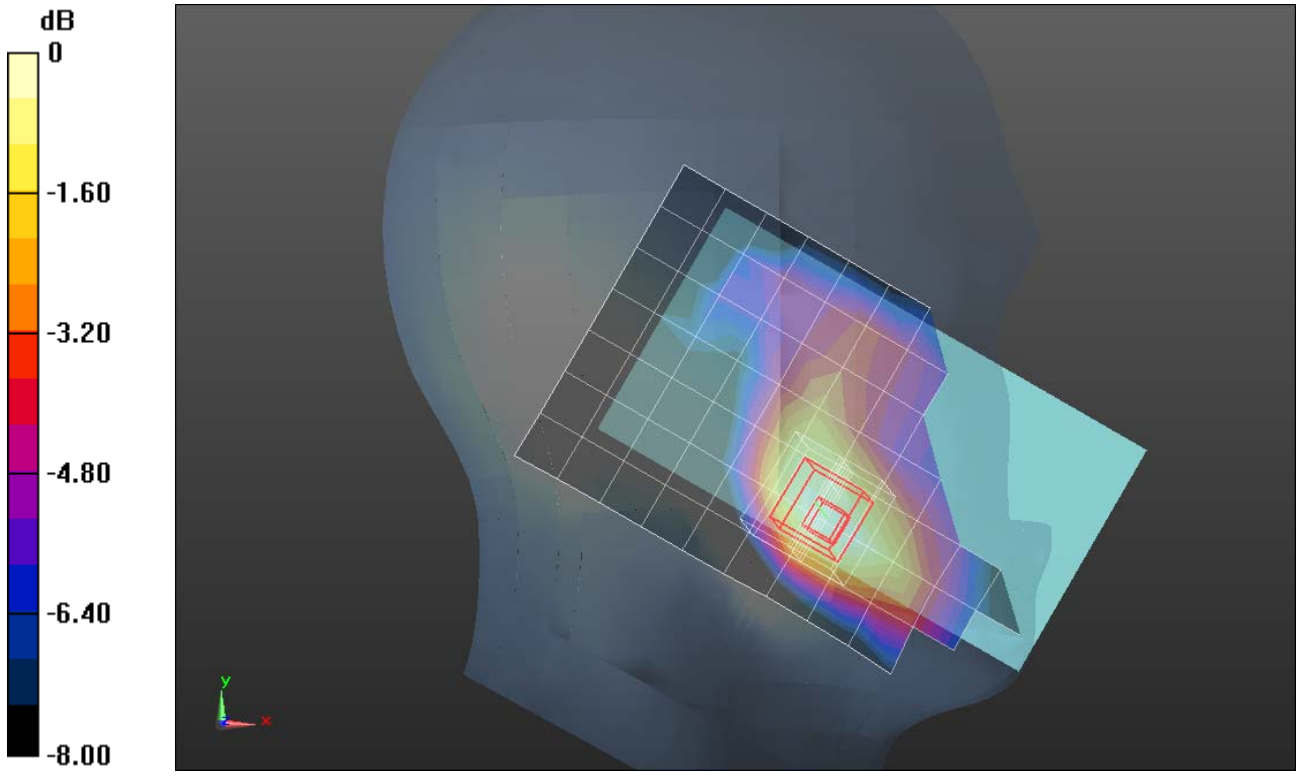

0 dB = 0.384 W/kg = -4.16 dBW/kg

CDMA BC1

Frequency: 1851.25 MHz; Duty Cycle: 1:1; Room Ambient Temperature: 24.0°C; Liquid Temperature: 23.0°C
Medium parameters used (interpolated): f = 1851.25 MHz; σ = 1.473 S/m; ε_r = 52.262; ρ = 1000 kg/m^3
DASY5 Configuration:
- Area Scan Setting: Find Secondary Maximum Within: 2.0 dB and with a peak SAR value greater than 0.0012W/kg
- Electronics: DAE4 Sn1343; Calibrated: 7/24/2013
- Probe: EX3DV4 - SN3885; ConvF(7.37, 7.37, 7.37); Calibrated: 9/18/2013;
- Sensor-Surface: 2.5mm (Mechanical Surface Detection (Locations From Previous Scan Used)), Sensor-Surface: 2.5mm (Mechanical Surface Detection)
- Phantom: ELI v5.0 (A); Type: QDOVA001BB; Serial: 1117

Rear/1xRTT_RC3_SO32_Ch.25/Area Scan (9x13x1): Measurement grid: dx=15mm, dy=15mm
Info: Interpolated medium parameters used for SAR evaluation.
Maximum value of SAR (measured) = 1.15 W/kg

Rear/1xRTT_RC3_SO32_Ch.25/Zoom Scan (5x5x7)/Cube 0: Measurement grid: dx=8mm, dy=8mm, dz=5mm
Reference Value = 28.171 V/m; Power Drift = 0.00 dB
Peak SAR (extrapolated) = 1.75 W/kg
SAR(1 g) = 0.962 W/kg; SAR(10 g) = 0.520 W/kg
Info: Interpolated medium parameters used for SAR evaluation.
Maximum value of SAR (measured) = 1.29 W/kg

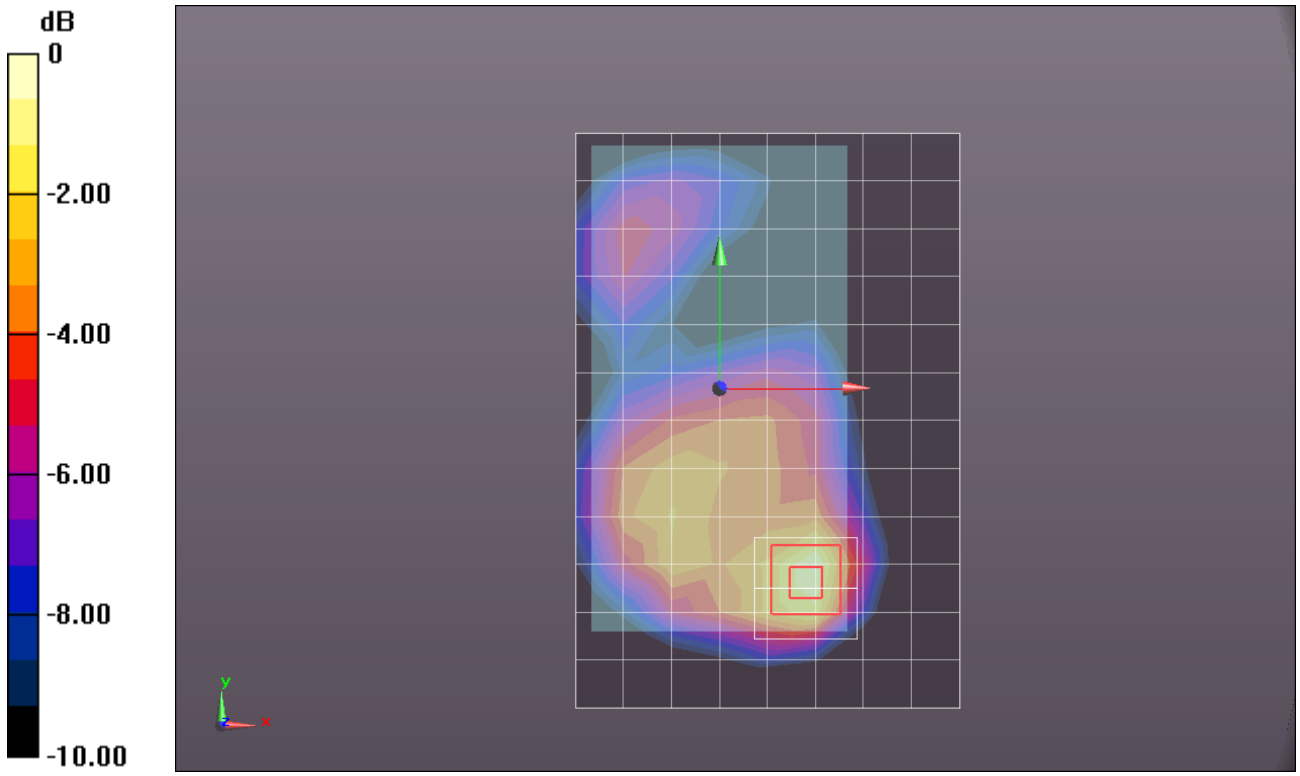

0 dB = 1.29 W/kg = 1.11 dBW/kg

LTE Band 4

Frequency: 1732.5 MHz; Duty Cycle: 1:1; Room Ambient Temperature: 24.0°C; Liquid Temperature: 23.0°C
Medium parameters used (interpolated): f = 1732.5 MHz; σ = 1.348 S/m; ε_r = 40.686; ρ = 1000 kg/m^3
DASY5 Configuration:
- Area Scan Setting: Find Secondary Maximum Within: 2.0 dB and with a peak SAR value greater than 0.0012W/kg
- Electronics: DAE4 Sn1259; Calibrated: 1/23/2014
- Probe: EX3DV4 - SN3772; ConvF(7.45, 7.45, 7.45); Calibrated: 2/26/2014;
- Sensor-Surface: 2.5mm (Mechanical Surface Detection)
- Phantom: SAM v5.0 ; Type: QD000P40CD; Serial: 1742

RHS/Touch_QPSK_1/99 RB_Ch 20175/Area Scan (8x13x1): Measurement grid: dx=15mm, dy=15mm

Info: Interpolated medium parameters used for SAR evaluation.
Maximum value of SAR (measured) = 0.474 W/kg

RHS/Touch_QPSK_1/99 RB_Ch 20175/Zoom Scan (6x6x7)/Cube 0: Measurement grid: dx=8mm, dy=8mm, dz=5mm

Reference Value = 18.259 V/m; Power Drift = 0.02 dB
Peak SAR (extrapolated) = 0.602 W/kg
SAR(1 g) = 0.409 W/kg; SAR(10 g) = 0.268 W/kg
Info: Interpolated medium parameters used for SAR evaluation.
Maximum value of SAR (measured) = 0.481 W/kg

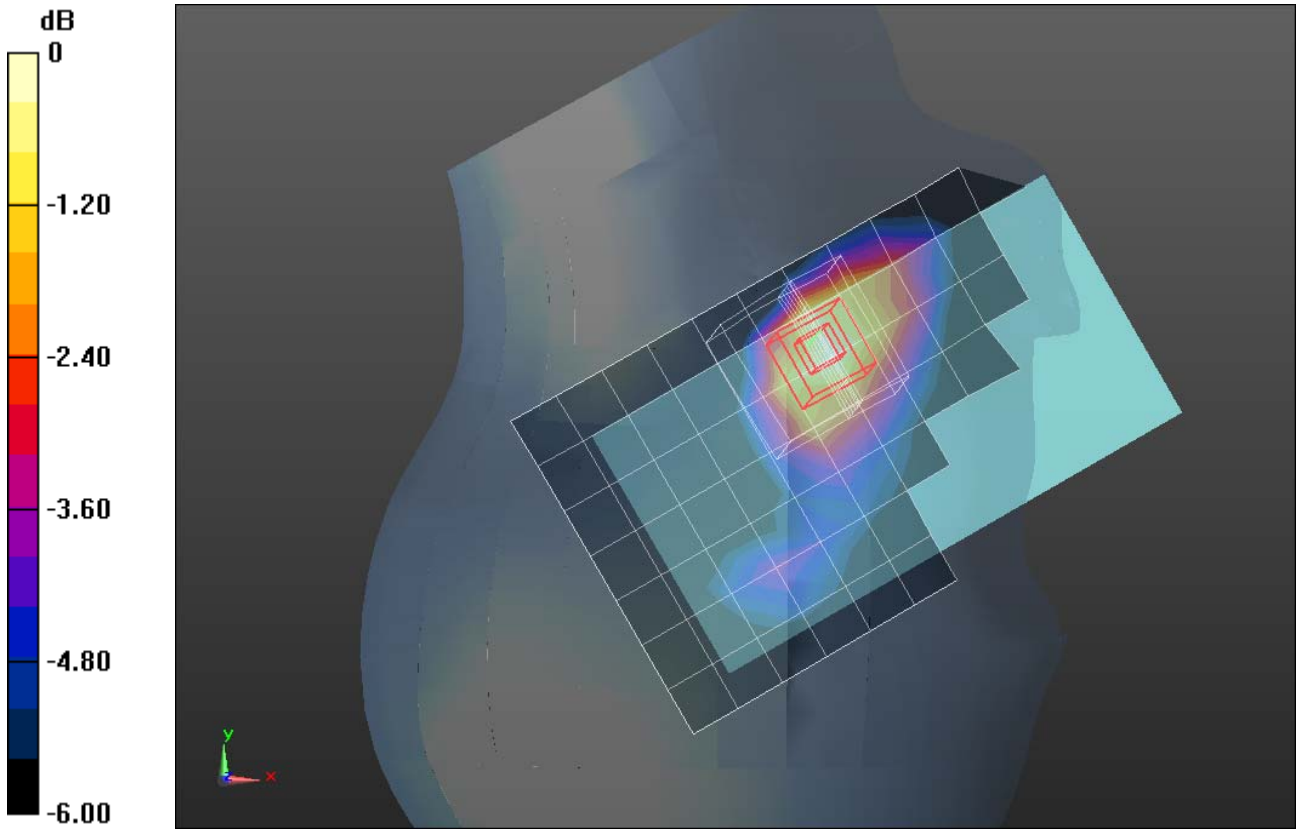

0 dB = 0.481 W/kg = -3.18 dBW/kg

LTE Band 4

Frequency: 1745 MHz; Duty Cycle: 1:1; Room Ambient Temperature: 24.0°C; Liquid Temperature: 23.0°C
Medium parameters used: f = 1745 MHz; σ = 1.482 S/m; ε_r = 52.373; ρ = 1000 kg/m^3
DASY5 Configuration:
- Area Scan Setting: Find Secondary Maximum Within: 2.0 dB and with a peak SAR value greater than 0.0012W/kg
- Electronics: DAE4 Sn1343; Calibrated: 7/24/2013
- Probe: EX3DV4 - SN3885; ConvF(7.59, 7.59, 7.59); Calibrated: 9/18/2013;
- Sensor-Surface: 2.5mm (Mechanical Surface Detection)
- Phantom: ELI v5.0 (B); Type: QDOVA001BB; Serial: 1118

Rear/QPSK_1/0 RB_Ch.20300/Area Scan (9x13x1): Measurement grid: dx=15mm, dy=15mm
Maximum value of SAR (measured) = 1.03 W/kg

Rear/QPSK_1/0 RB_Ch.20300/Zoom Scan (5x5x7)/Cube 0: Measurement grid: dx=8mm, dy=8mm, dz=5mm
Reference Value = 26.777 V/m; Power Drift = 0.00 dB
Peak SAR (extrapolated) = 1.51 W/kg
SAR(1 g) = 0.882 W/kg; SAR(10 g) = 0.531 W/kg
Maximum value of SAR (measured) = 1.11 W/kg

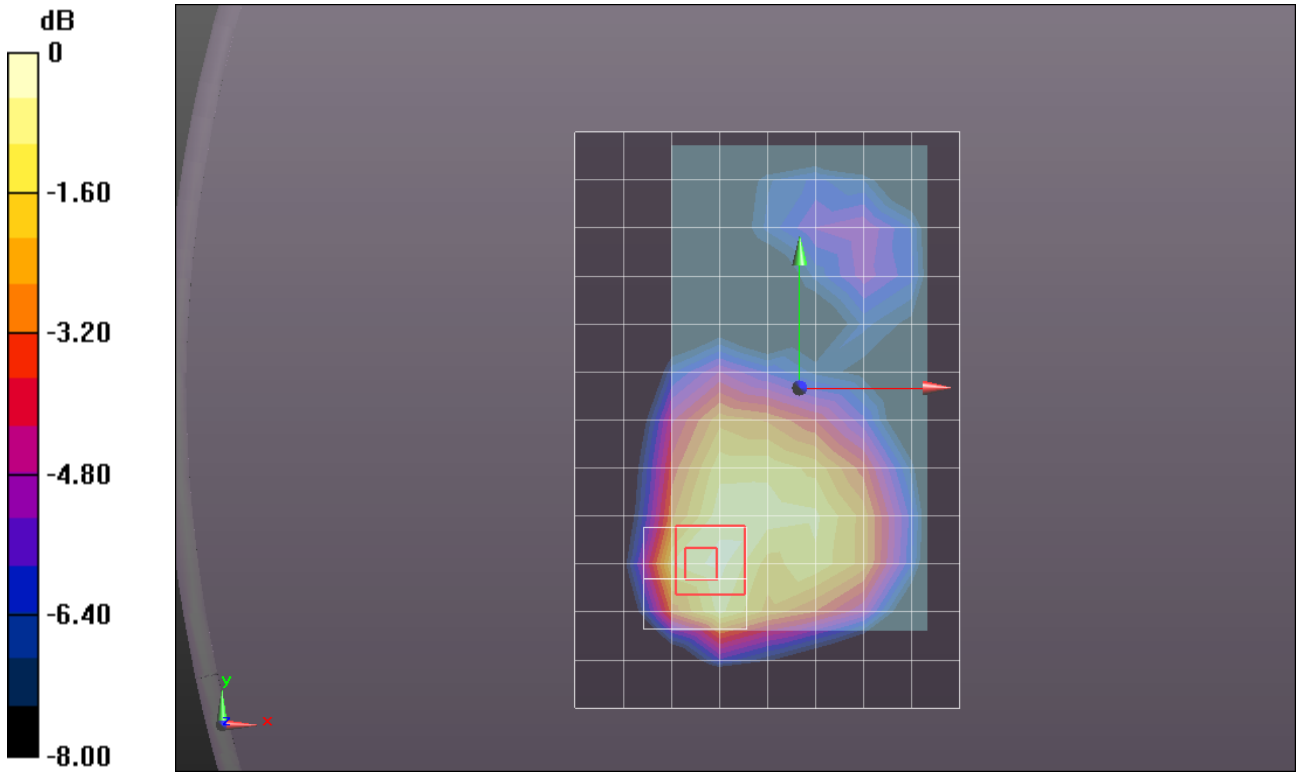

0 dB = 1.11 W/kg = 0.45 dBW/kg

LTE Band 13

Frequency: 782 MHz; Duty Cycle: 1:1; Room Ambient Temperature: 24.0°C; Liquid Temperature: 23.0°C
Medium parameters used (interpolated): f = 782 MHz; σ = 0.925 S/m; ε_r = 40.71; ρ = 1000 kg/m^3
DASY5 Configuration:
- Area Scan Setting: Find Secondary Maximum Within: 2.0 dB and with a peak SAR value greater than 0.0012W/kg
- Electronics: DAE4 Sn1239; Calibrated: 4/9/2013
- Probe: EX3DV4 - SN3871; ConvF(10.02, 10.02, 10.02); Calibrated: 7/29/2013;
- Sensor-Surface: 2.5mm (Mechanical Surface Detection)
- Phantom: SAM v5.0 (B); Type: QD000P40CD; Serial: 1628

LHS/Touch_QPSK_1/0 RB_Ch 23230/Area Scan (8x13x1): Measurement grid: dx=15mm, dy=15mm
Info: Interpolated medium parameters used for SAR evaluation.
Maximum value of SAR (measured) = 0.266 W/kg

LHS/Touch_QPSK_1/0 RB_Ch 23230/Zoom Scan (5x5x7)/Cube 0: Measurement grid: dx=8mm, dy=8mm, dz=5mm
Reference Value = 18.499 V/m; Power Drift = 0.02 dB
Peak SAR (extrapolated) = 0.303 W/kg
SAR(1 g) = 0.241 W/kg; SAR(10 g) = 0.188 W/kg
Info: Interpolated medium parameters used for SAR evaluation.

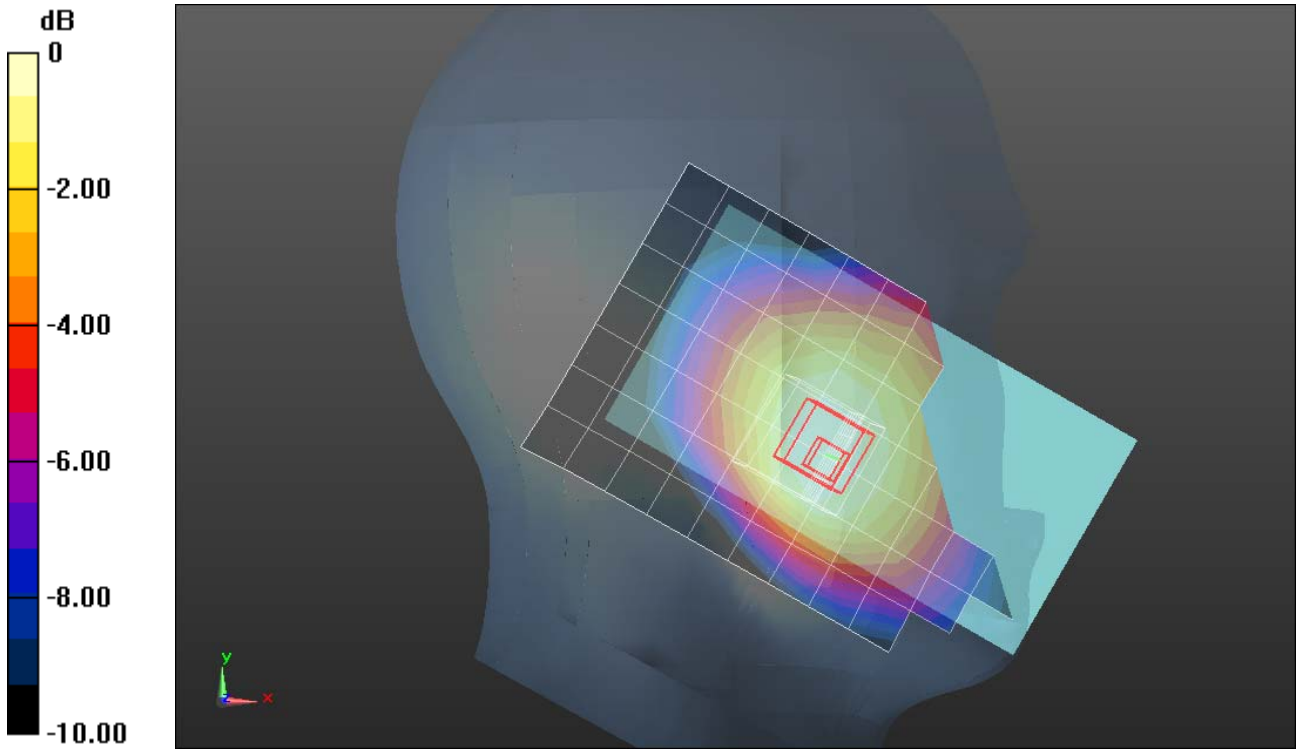

0 dB = 0.266 W/kg = -5.75 dBW/kg

LTE Band 13

Frequency: 782 MHz; Duty Cycle: 1:1; Room Ambient Temperature: 24.0°C; Liquid Temperature: 23.0°C
Medium parameters used (interpolated): f = 782 MHz; σ = 0.995 S/m; ε_r = 53.16; ρ = 1000 kg/m^3
DASY5 Configuration:
- Area Scan Setting: Find Secondary Maximum Within: 2.0 dB and with a peak SAR value greater than 0.0012W/kg
- Electronics: DAE4 Sn1343; Calibrated: 7/24/2013
- Probe: EX3DV4 - SN3885; ConvF(9.14, 9.14, 9.14); Calibrated: 9/18/2013;
- Sensor-Surface: 2.5mm (Mechanical Surface Detection)
- Phantom: ELI v5.0 (A); Type: QDOVA001BB; Serial: 1117

Rear/QPSK_1/0 RB_Ch.23230/Area Scan (9x13x1): Measurement grid: dx=15mm, dy=15mm

Info: Interpolated medium parameters used for SAR evaluation.
Maximum value of SAR (measured) = 0.750 W/kg

Rear/QPSK_1/0 RB_Ch.23230/Zoom Scan (5x5x7)/Cube 0: Measurement grid: dx=8mm, dy=8mm, dz=5mm

Reference Value = 27.877 V/m; Power Drift = -0.04 dB
Peak SAR (extrapolated) = 0.952 W/kg
SAR(1 g) = 0.621 W/kg; SAR(10 g) = 0.407 W/kg
Info: Interpolated medium parameters used for SAR evaluation.
Maximum value of SAR (measured) = 0.729 W/kg

Rear/QPSK_1/0 RB_Ch.23230/Zoom Scan 2 (5x5x7)/Cube 0: Measurement grid: dx=8mm, dy=8mm, dz=5mm

Reference Value = 27.877 V/m; Power Drift = -0.04 dB
Peak SAR (extrapolated) = 0.604 W/kg
SAR(1 g) = 0.489 W/kg; SAR(10 g) = 0.381 W/kg
Info: Interpolated medium parameters used for SAR evaluation.
Maximum value of SAR (measured) = 0.545 W/kg

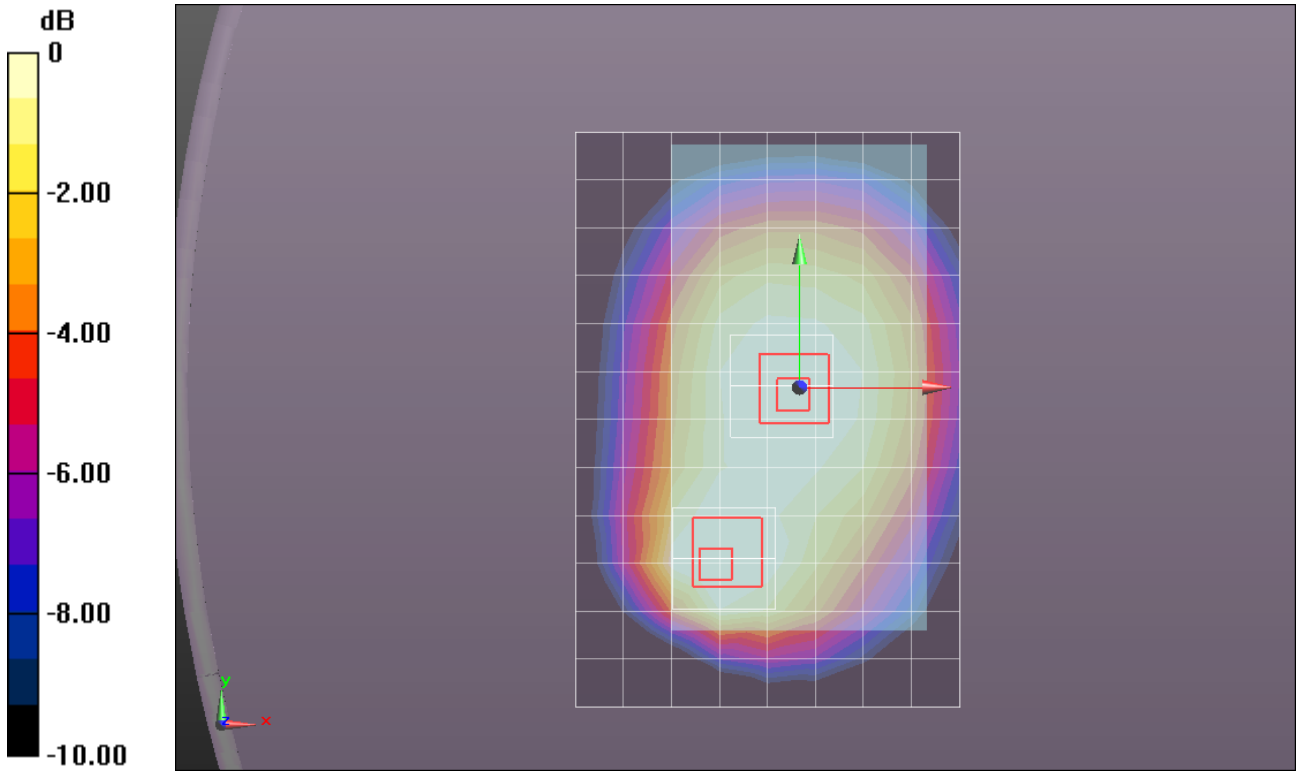

0 dB = 0.545 W/kg = -2.64 dBW/kg

Wi-Fi 2.4 GHz

Frequency: 2437 MHz; Duty Cycle: 1:1; Room Ambient Temperature: 24.0°C; Liquid Temperature: 23.0°C
Medium parameters used (interpolated): f = 2437 MHz; σ = 1.821 S/m; ε_r = 39.152; ρ = 1000 kg/m^3
DASY5 Configuration:
- Area Scan Setting: Find Secondary Maximum Within: 2.0 dB and with a peak SAR value greater than 0.0012W/kg
- Electronics: DAE4 Sn1357; Calibrated: 2/17/2014
- Probe: EX3DV4 - SN3901; ConvF(7.3, 7.3, 7.3); Calibrated: 2/25/2014;
- Sensor-Surface: 2.5mm (Mechanical Surface Detection (Locations From Previous Scan Used)), Sensor-Surface: 2.5mm (Mechanical Surface Detection)
- Phantom: SAM with CRP; Type: SAM;

LHS/Tilt_802.11b_ch 6/Area Scan (11x17x1): Measurement grid: dx=12mm, dy=12mm

Info: Interpolated medium parameters used for SAR evaluation.
Maximum value of SAR (measured) = 0.129 W/kg

LHS/Tilt_802.11b_ch 6/Zoom Scan (7x7x7)/Cube 0: Measurement grid: dx=5mm, dy=5mm, dz=5mm

Reference Value = 8.244 V/m; Power Drift = 0.10 dB
Peak SAR (extrapolated) = 0.212 W/kg
SAR(1 g) = 0.093 W/kg; SAR(10 g) = 0.042 W/kg
Info: Interpolated medium parameters used for SAR evaluation.
Maximum value of SAR (measured) = 0.135 W/kg

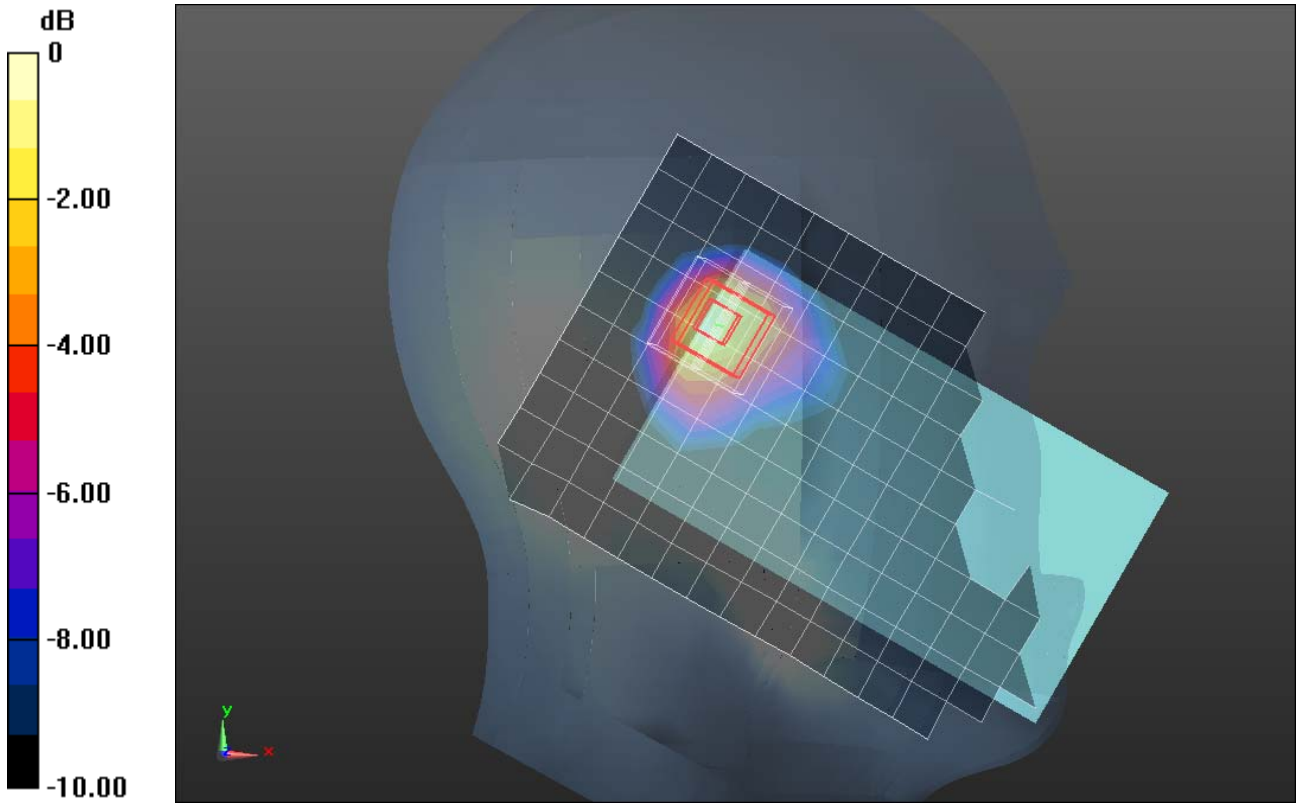

0 dB = 0.135 W/kg = -8.70 dBW/kg

Wi-Fi 2.4 GHz

Frequency: 2437 MHz; Duty Cycle: 1:1; Room Ambient Temperature: 24.0°C; Liquid Temperature: 23.0°C
Medium parameters used (interpolated): f = 2437 MHz; σ = 1.955 S/m; ε_r = 52.046; ρ = 1000 kg/m^3
DASY5 Configuration:
- Area Scan Setting: Find Secondary Maximum Within: 2.0 dB and with a peak SAR value greater than 0.0012W/kg
- Electronics: DAE4 Sn1357; Calibrated: 2/17/2014
- Probe: EX3DV4 - SN3901; ConvF(6.97, 6.97, 6.97); Calibrated: 2/25/2014;
- Sensor-Surface: 2.5mm (Mechanical Surface Detection)
- Phantom: ELI v5.0 A; Type: QDOVA002AA; Serial: 1180

Rear/802.11b_Ch.6/Area Scan (11x17x1): Measurement grid: dx=12mm, dy=12mm

Info: Interpolated medium parameters used for SAR evaluation.
Maximum value of SAR (measured) = 0.128 W/kg

Rear/802.11b_Ch.6/Zoom Scan (7x7x7)/Cube 0: Measurement grid: dx=5mm, dy=5mm, dz=5mm

Reference Value = 8.153 V/m; Power Drift = -0.02 dB
Peak SAR (extrapolated) = 0.193 W/kg
SAR(1 g) = 0.097 W/kg; SAR(10 g) = 0.050 W/kg
Info: Interpolated medium parameters used for SAR evaluation.
Maximum value of SAR (measured) = 0.131 W/kg

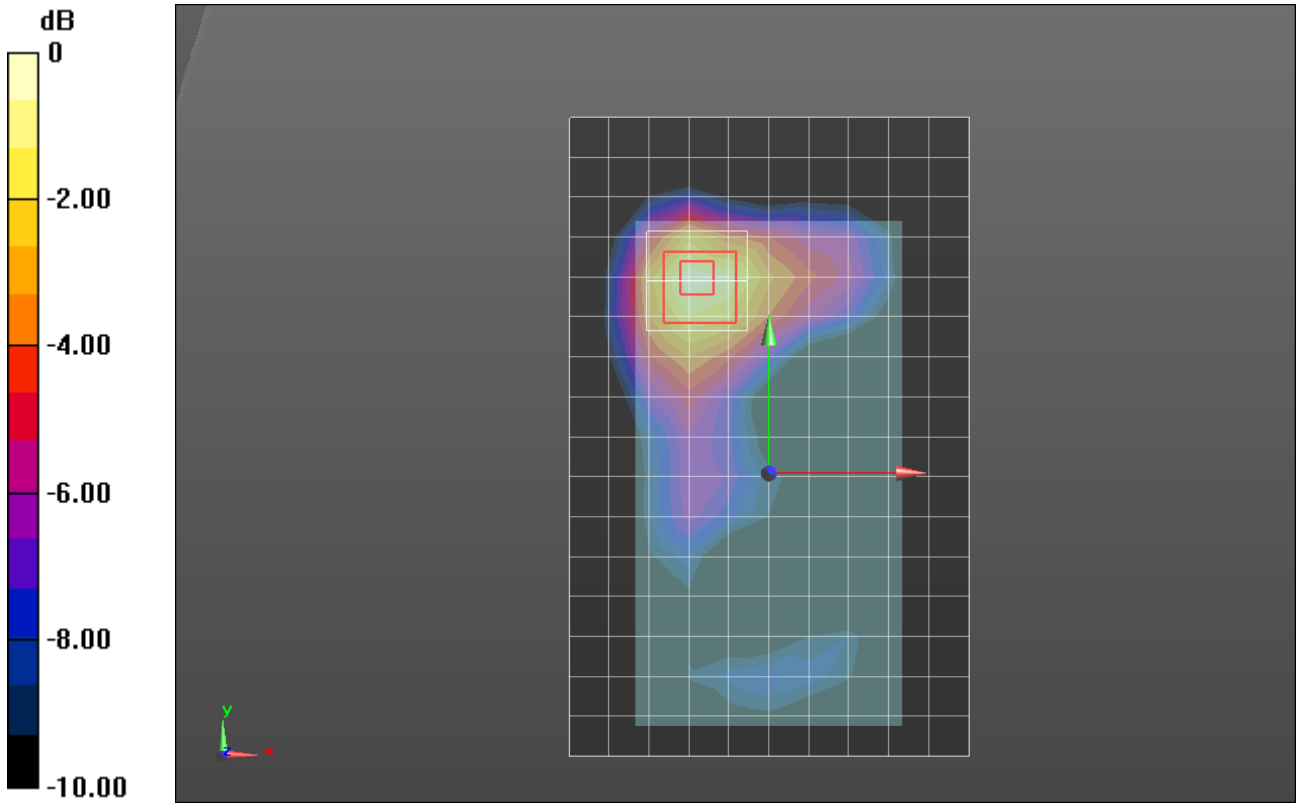

0 dB = 0.131 W/kg = -8.83 dBW/kg

Wi-Fi 5.8GHz

Frequency: 5745 MHz; Duty Cycle: 1:1; Room Ambient Temperature: 24.0°C; Liquid Temperature: 23.0°C
Medium parameters used: f = 5745 MHz; σ = 6.209 S/m; ε_r = 49.976; ρ = 1000 kg/m^3
DASY5 Configuration:
- Area Scan Setting: Find Secondary Maximum Within: 2.0 dB and with a peak SAR value greater than 0.0012W/kg
- Electronics: DAE4 Sn1259; Calibrated: 1/23/2014
- Probe: EX3DV4 - SN3772; ConvF(3.85, 3.85, 3.85); Calibrated: 2/26/2014;
- Sensor-Surface: 2mm (Mechanical Surface Detection)
- Phantom: New ELI B v5.0; Type: QDOVA002AA; Serial: TP:xxxx

Rear/802.11a_Ch 149/Area Scan (11x19x1): Measurement grid: dx=10mm, dy=10mm
Maximum value of SAR (measured) = 0.384 W/kg

Rear/802.11a_Ch 149/Zoom Scan 2 (7x7x12)/Cube 0: Measurement grid: dx=4mm, dy=4mm, dz=2mm
Reference Value = 7.562 V/m; Power Drift = 0.15 dB
Peak SAR (extrapolated) = 0.918 W/kg
SAR(1 g) = 0.184 W/kg; SAR(10 g) = 0.053 W/kg
Maximum value of SAR (measured) = 0.380 W/kg

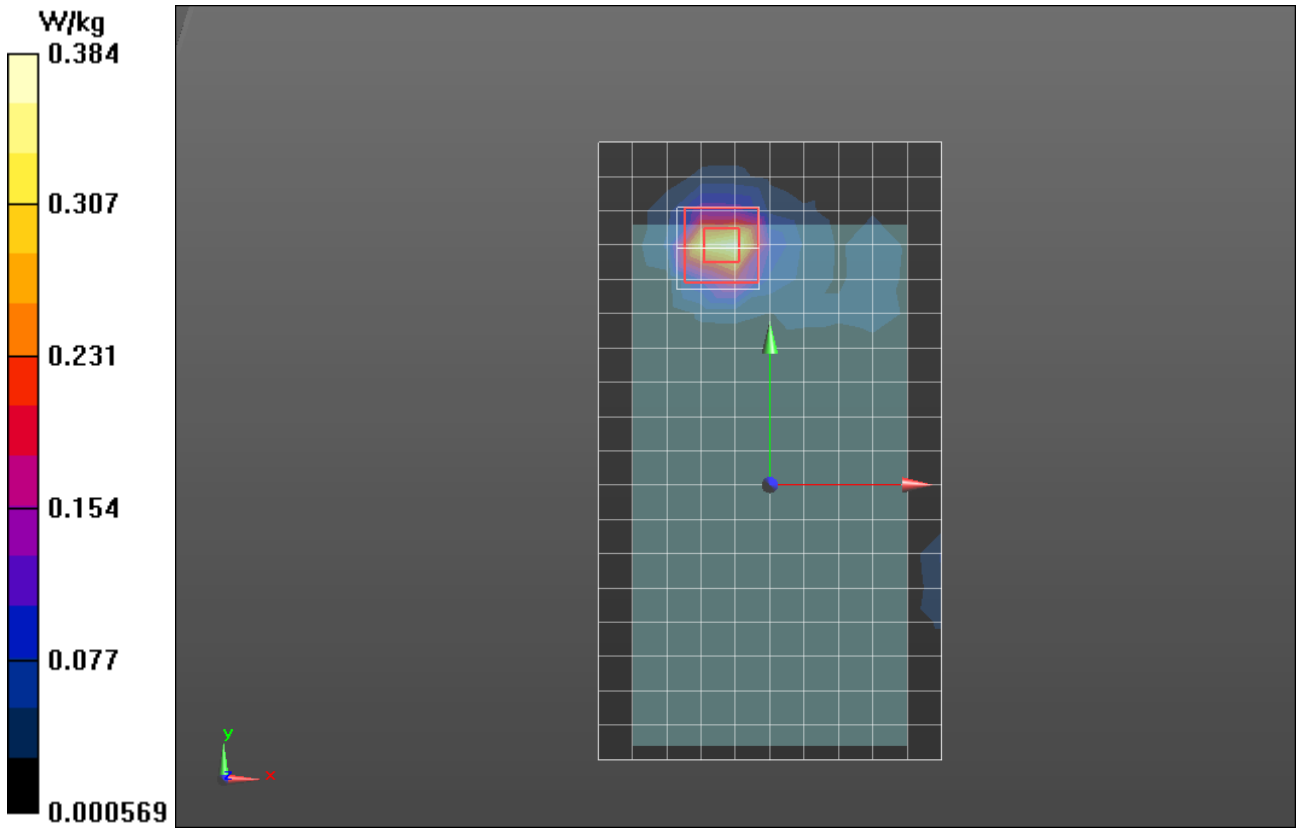

Wi-Fi 5.2 GHz

Frequency: 5240 MHz; Duty Cycle: 1:1; Room Ambient Temperature: 24.0°C; Liquid Temperature: 23.0°C
Medium parameters used: f = 5240 MHz; σ = 4.649 S/m; ε_r = 37.214; ρ = 1000 kg/m^3
DASY5 Configuration:
- Area Scan Setting: Find Secondary Maximum Within: 2.0 dB and with a peak SAR value greater than 0.0012W/kg
- Electronics: DAE4 Sn1343; Calibrated: 7/24/2013
- Probe: EX3DV4 - SN3885; ConvF(4.92, 4.92, 4.92); Calibrated: 9/18/2013;
- Sensor-Surface: 2mm (Mechanical Surface Detection)
- Phantom: SAM with CRP; Type: SAM;

RHS/Tilt_802.11a_Ch 48/Area Scan (13x19x1): Measurement grid: dx=10mm, dy=10mm
Maximum value of SAR (measured) = 0.0378 W/kg

RHS/Tilt_802.11a_Ch 48/Zoom Scan (7x7x12)/Cube 0: Measurement grid: dx=4mm, dy=4mm, dz=2mm
Reference Value = 3.272 V/m; Power Drift = -0.16 dB
Peak SAR (extrapolated) = 0.273 W/kg
SAR(1 g) = 0.016 W/kg; SAR(10 g) = 0.00248 W/kg
Maximum value of SAR (measured) = 0.0366 W/kg

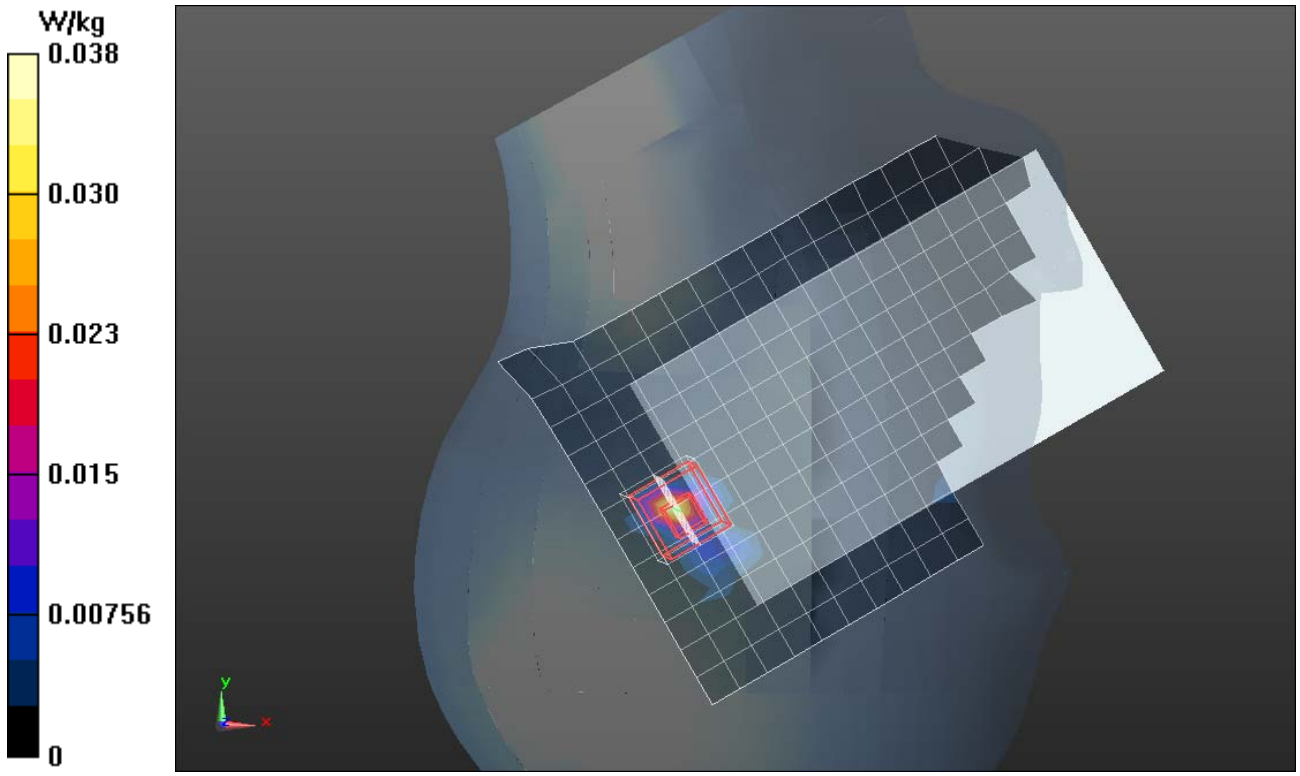

Wi-Fi 5.5GHz

Frequency: 5500 MHz; Duty Cycle: 1:1; Room Ambient Temperature: 24.0°C; Liquid Temperature: 23.0°C
Medium parameters used: f = 5500 MHz; σ = 5.831 S/m; ε_r = 50.375; ρ = 1000 kg/m^3
DASY5 Configuration:
- Area Scan Setting: Find Secondary Maximum Within: 2.0 dB and with a peak SAR value greater than 0.0012W/kg
- Electronics: DAE4 Sn1259; Calibrated: 1/23/2014
- Probe: EX3DV4 - SN3772; ConvF(3.7, 3.7, 3.7); Calibrated: 2/26/2014;
- Sensor-Surface: 2mm (Mechanical Surface Detection)
- Phantom: New ELI B v5.0; Type: QDOVA002AA; Serial: TP:xxxx

Rear/802.11a_Ch 100/Area Scan (11x19x1): Measurement grid: dx=10mm, dy=10mm
Maximum value of SAR (measured) = 0.123 W/kg
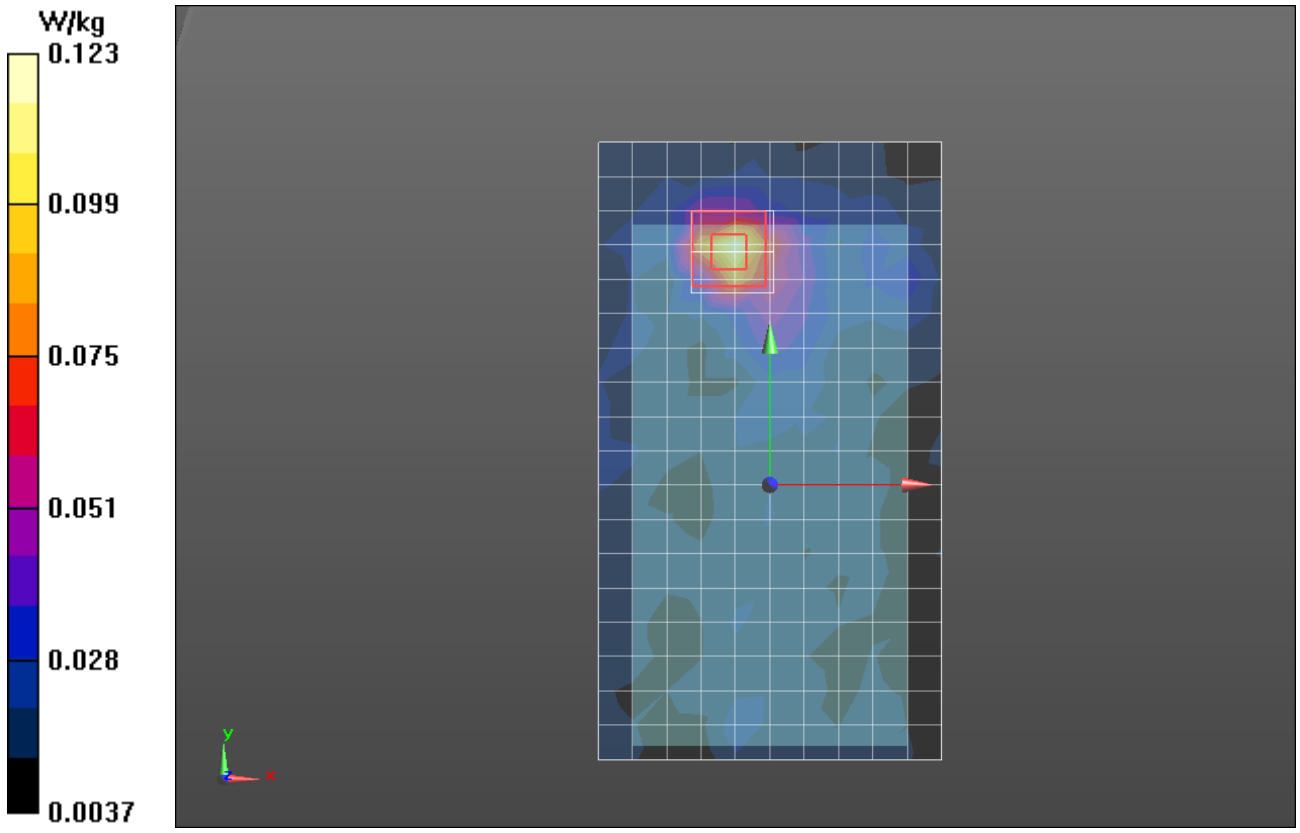
Rear/802.11a_Ch 100/Zoom Scan (7x7x12)/Cube 0: Measurement grid: dx=4mm, dy=4mm, dz=2mm
Reference Value = 4.562 V/m; Power Drift = 0.19 dB
Peak SAR (extrapolated) = 0.300 W/kg
SAR(1 g) = 0.068 W/kg; SAR(10 g) = 0.020 W/kg
Maximum value of SAR (measured) = 0.146 W/kg