FCC CFR47 PART 22 SUBPART H
FCC CFR47 PART 24 SUBPART E
FCC CFR47 PART 27 SUBPART L
FCC CFR47 PART 27 SUBPART E

C2PC CERTIFICATION TEST REPORT

FOR

CDMA/LTE Phone + Bluetooth & DTS/UNII a/b/g/n + NFC

MODEL NUMBER: LG-VS880, VS880, LGVS880
FCC ID: ZNFVS880

REPORT NUMBER: 14U17461-1
ISSUE DATE: June 12, 2014

Prepared for

LG ELECTRONICS MOBILECOMM U.S.A., INC
1000 SYLVAN AVENUE
ENGLEWOOD CLIFFS, NEW JERSEY, 07632, U.S.A.

Prepared by

UL VERIFICATION SERVICES INC.
47173 BENICIA STREET
FREMONT, CA 94538, U.S.A.
TEL: (510) 771-1000
FAX: (510) 661-0888

NVLAP LAB CODE 200065-0

Revision History

Rev.	Issue Date	Revisions	Revised By
-	6/12/14	Initial Issue	P. Kim

UL VERIFICATION SERVICES INC. FORM NO: CCSUP4701I
47173 BENICIA STREET, FREMONT, CA 94538, USA TEL: (510) 771-1000 FAX: (510) 661-0888

This report shall not be reproduced except in full, without the written approval of UL Verification Services Inc.

TABLE OF CONTENTS

1. ATTESTATION OF TEST RESULTS 5
2. TEST METHODOLOGY 6
3. FACILITIES AND ACCREDITATION 6
4. CALIBRATION AND UNCERTAINTY 6
4.1. MEASURING INSTRUMENT CALIBRATION 6
4.2. SAMPLE CALCULATION 6
4.3. MEASUREMENT UNCERTAINTY 6
5. EQUIPMENT UNDER TEST 7
5.1. DESCRIPTION OF EUT 7
5.2. MAXIMUM OUTPUT POWER 7
5.3. MAXIMUM OUTPUT POWER (LTE) 8
5.4. DESCRIPTION OF AVAILABLE ANTENNAS 9
5.5. DESCRIPTION OF TEST SETUP 10
6. TEST AND MEASUREMENT EQUIPMENT 13
7. Summary Table 14
8.1. CDMA2000 15
8.1.1. 1xRTT 15
8.1.2. CDMA2000 OUTPUT POWER RESULT 16
8.1.3. 1xEV-DO Release 0 17
8.1.4. 1XEVDO REL 0 OUTPUT POWER RESULT 18
8.1.5. 1xEV-DO Rev. A 19
8.1.6. 1xEVDO REV A OUTPUT RESULT 20
8.2. LTE OUTPUT VERIFICATION 21
8.2.1. LTE OUTPUT RESULT 21
9. RADIATED TEST RESULTS 24
9.1. RADIATED POWER (ERP & EIRP) 24
9.1.1. ERP/EIRP Results 25
9.1.2. LTE ERP/EIRP Results 26
9.1.3. ERP/EIRP DATA 28
9.2. FIELD STRENGTH OF SPURIOUS RADIATION 42

UL VERIFICATION SERVICES INC. FORM NO: CCSUP4701I
47173 BENICIA STREET, FREMONT, CA 94538, USA TEL: (510) 771-1000 FAX: (510) 661-0888

This report shall not be reproduced except in full, without the written approval of UL Verification Services Inc.

9.2.1. SPURIOUS RADIATION DATA 43
10. SETUP PHOTOS 57

UL VERIFICATION SERVICES INC. FORM NO: CCSUP4701I
47173 BENICIA STREET, FREMONT, CA 94538, USA TEL: (510) 771-1000 FAX: (510) 661-0888

This report shall not be reproduced except in full, without the written approval of UL Verification Services Inc.

1. ATTESTATION OF TEST RESULTS

COMPANY NAME:	**LG ELECTRONICS MOBILECOMM U.S.A., INC**
EUT DESCRIPTION:	**CDMA/LTE Phone + Bluetooth & DTS/UNII a/b/g/n + NFC**
MODEL:	**LG-VS880, VS880, LGVS880**
SERIAL NUMBER:	**1978444**
DATE TESTED:	**MAY 20 - JUNE 12, 2014**

APPLICABLE STANDARDS	
STANDARD	**TEST RESULTS**
FCC PART 22H, 24E, 27E and 27L	PASS

UL Verification Services Inc. tested the above equipment in accordance with the requirements set forth in the above standards. All indications of Pass/Fail in this report are opinions expressed by UL Verification Services Inc. based on interpretations and/or observations of test results. Measurement Uncertainties were not taken into account and are published for informational purposes only. The test results show that the equipment tested is capable of demonstrating compliance with the requirements as documented in this report.

Note: The results documented in this report apply only to the tested sample, under the conditions and modes of operation as described herein. This document may not be altered or revised in any way unless done so by UL Verification Services Inc. and all revisions are duly noted in the revisions section. Any alteration of this document not carried out by UL Verification Services Inc. will constitute fraud and shall nullify the document. This report must not be used by the client to claim product certification, approval, or endorsement by NVLAP, NIST, any agency of the Federal Government, or any agency of any government.

Approved & Released

For UL Verification Services Inc. By:

PHILIP KIM

CONSUMER TECHNOLOGY DIVISION
PROGRAM MANAGER
UL Verification Services Inc.

Tested By:

CHARLES VERGONIO

CONSUMER TECHNOLOGY DIVISION
LAB TECHNICIAN
UL Verification Services Inc.

UL VERIFICATION SERVICES INC. FORM NO: CCSUP4701I
47173 BENICIA STREET, FREMONT, CA 94538, USA TEL: (510) 771-1000 FAX: (510) 661-0888

This report shall not be reproduced except in full, without the written approval of UL Verification Services Inc.

2. TEST METHODOLOGY

The tests documented in this report were performed in accordance with TIA-603-C, FCC CFR 47 Part 22, FCC CFR Part 24, FCC CFR 47 Part 27

3. FACILITIES AND ACCREDITATION

The test sites and measurement facilities used to collect data are located at 47173 Benicia Street, Fremont, California, USA.

UL Verification Services Inc. is accredited by NVLAP, Laboratory Code 200065-0. The full scope of accreditation can be viewed at http://www.ul.com

4. CALIBRATION AND UNCERTAINTY

4.1. MEASURING INSTRUMENT CALIBRATION

The measuring equipment utilized to perform the tests documented in this report has been calibrated in accordance with the manufacturer's recommendations, and is traceable to recognized national standards

4.2. SAMPLE CALCULATION

Where relevant, the following sample calculation is provided:

EIRP = PSA reading with EUT worst orientation (dBm) + Path loss (dB) – cable loss(between the SG and substitution antenna) + Substitution Antenna Factor (dBi)

ERP = PSA reading with EUT worst orientation (dBm) + Path loss (dB) – cable loss(between the SG and substitution antenna)

(Path loss = Signal generator output – PSA reading with substitution antenna)

4.3. MEASUREMENT UNCERTAINTY

Where relevant, the following measurement uncertainty levels have been estimated for tests performed on the apparatus:

PARAMETER	UNCERTAINTY
Conducted Disturbance, 0.15 to 30 MHz	3.52 dB
Radiated Disturbance, 30 to 18000 MHz	4.94 dB

Uncertainty figures are valid to a confidence level of 95%.

UL VERIFICATION SERVICES INC. FORM NO: CCSUP4701I
47173 BENICIA STREET, FREMONT, CA 94538, USA TEL: (510) 771-1000 FAX: (510) 661-0888

This report shall not be reproduced except in full, without the written approval of UL Verification Services Inc.

5. EQUIPMENT UNDER TEST

5.1. DESCRIPTION OF EUT

The EUT is a CDMA/LTE Phone + Bluetooth & DTS/UNII a/b/g/n + NFC.

5.2. MAXIMUM OUTPUT POWER

The transmitter has a maximum peak conducted and radiated ERP / EIRP output powers as follows:

FCC Part 22/24						
Band	Frequency Range(MHz)	Modulation Peak	Conducted		Radiated	
			Avg (dBm)	Avg (mW)	Avg (dBm)	Avg (mW)
BC0	824~849	1xRTT	25.3	338.84	22.011	158.89
	824~849	EVDO REL. 0	25.3	338.84	22.81	190.99
	824~849	EVDO REV. A	25.3	338.84		
BC1	1850~1910	1xRTT	24.5	281.84	25.92	390.84
	1850~1910	EVDO REL. 0	24.5	281.84	25.29	338.06
	1850~1910	EVDO REV. A	24.5	281.84		

UL VERIFICATION SERVICES INC. FORM NO: CCSUP4701I
47173 BENICIA STREET, FREMONT, CA 94538, USA TEL: (510) 771-1000 FAX: (510) 661-0888

This report shall not be reproduced except in full, without the written approval of UL Verification Services Inc.

5.3. MAXIMUM OUTPUT POWER (LTE)

The transmitter has a maximum peak conducted and radiated ERP/EIRP output powers as follows:

FCC Part 27							
Band	Frequency Range(MHz)	BandWidth (MHz)	Modulation	Conducted		Radiated	
			Peak	Avg (dBm)	Avg (mW)	Avg (dBm)	Avg (mW)
LTE13	777~787	10MHz	QPSK	24.7	295.12	21.40	138.04
	777~787	10MHz	16QAM	23.5	223.87	20.35	108.39

FCC Part 27							
Band	Frequency Range(MHz)	BandWidth (MHz)	Modulation	Conducted		Radiated	
			Peak	Avg (dBm)	Avg (mW)	Avg (dBm)	Avg (mW)
LTE4	1710~1755	20MHz	QPSK	24.7	295.12	24.87	306.90
	1710~1755	20MHz	16QAM	23.7	234.42	23.7	234.42
FCC Part 27							
Band	Frequency Range(MHz)	BandWidth (MHz)	Modulation	Conducted		Radiated	
			Peak	Avg (dBm)	Avg (mW)	Avg (dBm)	Avg (mW)
LTE4	1710~1755	15MHz	QPSK	24.7	295.12	24.68	293.76
	1710~1755	15MHz	16QAM	23.7	234.42	24.60	288.40
FCC Part 27							
Band	Frequency Range(MHz)	BandWidth (MHz)	Modulation	Conducted		Radiated	
			Peak	Avg (dBm)	Avg (mW)	Avg (dBm)	Avg (mW)
LTE4	1710~1755	10MHz	QPSK	24.7	295.12	24.48	280.54
	1710~1755	10MHz	16QAM	23.7	234.42	23.47	222.33
FCC Part 27							
Band	Frequency Range(MHz)	BandWidth (MHz)	Modulation	Conducted		Radiated	
			Peak	Avg (dBm)	Avg (mW)	Avg (dBm)	Avg (mW)
LTE4	1710~1755	5MHz	QPSK	24.7	295.12	25.16	328.1
	1710~1755	5MHz	16QAM	23.6	229.09	24.31	269.77

UL VERIFICATION SERVICES INC. FORM NO: CCSUP4701I
47173 BENICIA STREET, FREMONT, CA 94538, USA TEL: (510) 771-1000 FAX: (510) 661-0888

This report shall not be reproduced except in full, without the written approval of UL Verification Services Inc.

5.4. DESCRIPTION OF AVAILABLE ANTENNAS

The radio utilizes a PIFA antenna for the [List the bands supported] with a maximum peak gain as follow:

Frequency (MHz)	Peak Gain (dBi)
BC0, 824~849MHz	-4.52
BC1, 1850~1910MHz	-0.42
LTE4, 1710~1755MHz	-0.50
LTE13, 777~787MHz	-3.11

UL VERIFICATION SERVICES INC. FORM NO: CCSUP4701I
47173 BENICIA STREET, FREMONT, CA 94538, USA TEL: (510) 771-1000 FAX: (510) 661-0888

This report shall not be reproduced except in full, without the written approval of UL Verification Services Inc.

5.5. DESCRIPTION OF TEST SETUP

SUPPORT EQUIPMENT

Support Equipment List				
Description	Manufacturer	Model	Serial Number	FCC ID
AC Adapter	LG	MCS-01WD	DB390078751	N/A
Headset	LG	N/A	N/A	N/A

I/O CABLES (CONDUCTED SETUP)

I/O Cable List						
Cable No	Port	# of identical ports	Connector Type	Cable Type	Cable Length (m)	Remarks
1	RF Out	1	Spectrum Analyzer	Shielded	None	NA
2	Antenna Port	1	EUT	Shielded	0.1m	NA
3	RF In/Out	1	Communication Test Set	Shielded	1m	NA

I/O CABLES (RADIATED SETUP)

I/O CABLE LIST						
Cable No.	Port	# of Identical Ports	Connector Type	Cable Type	Cable Length	Remarks
1	USB	1	AC Adapter	Un-shielded	1.2m	No
2	Jack	1	Headset	Shielded	1m	No
3	RF In/out	1	Communication Test Set	Un-shielded	2m	Yes

TEST SETUP

The EUT is continuously communicated to the call box during the tests.

UL VERIFICATION SERVICES INC. FORM NO: CCSUP4701I
47173 BENICIA STREET, FREMONT, CA 94538, USA TEL: (510) 771-1000 FAX: (510) 661-0888

This report shall not be reproduced except in full, without the written approval of UL Verification Services Inc.

SETUP DIAGRAM FOR TESTS (CONDUCTED TEST SETUP)

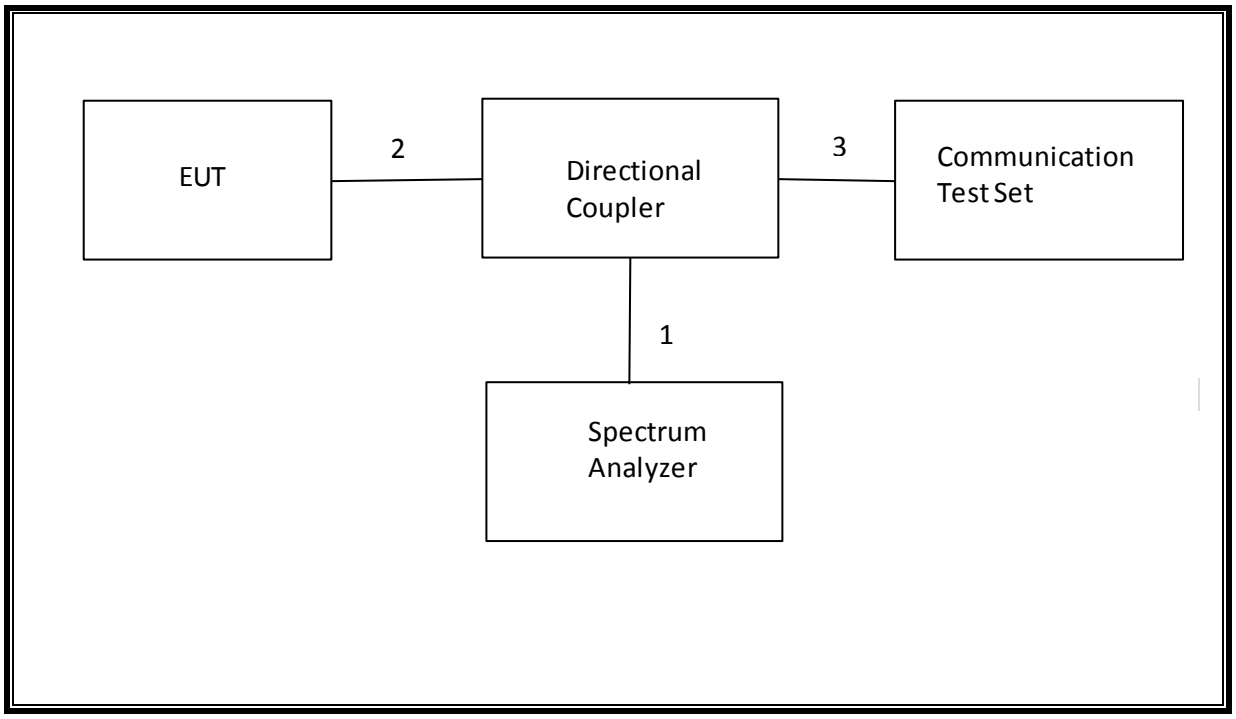

UL VERIFICATION SERVICES INC. FORM NO: CCSUP4701I
47173 BENICIA STREET, FREMONT, CA 94538, USA TEL: (510) 771-1000 FAX: (510) 661-0888

This report shall not be reproduced except in full, without the written approval of UL Verification Services Inc.

SETUP DIAGRAM FOR TESTS (RADIATED TEST SETUP)

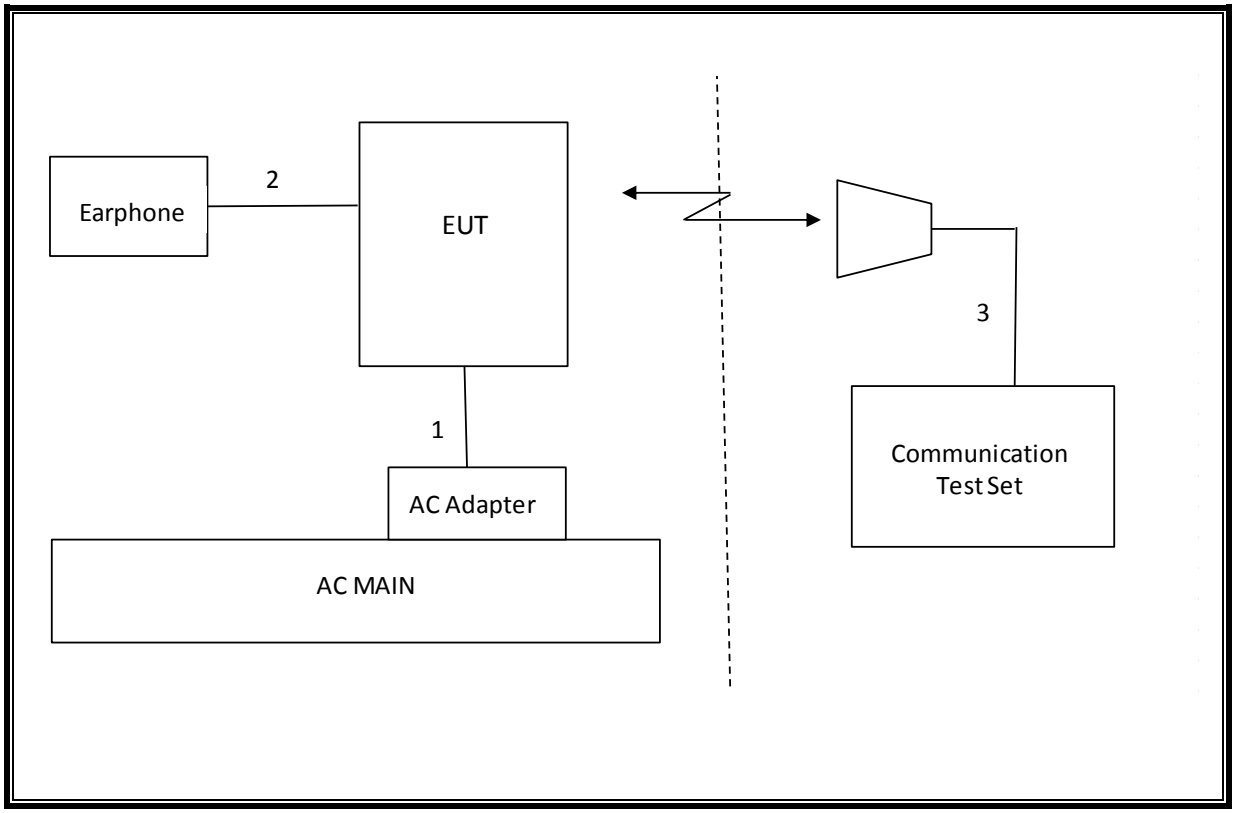

UL VERIFICATION SERVICES INC. FORM NO: CCSUP4701I
47173 BENICIA STREET, FREMONT, CA 94538, USA TEL: (510) 771-1000 FAX: (510) 661-0888

This report shall not be reproduced except in full, without the written approval of UL Verification Services Inc.

6. TEST AND MEASUREMENT EQUIPMENT

The following test and measurement equipment was utilized for the tests documented in this report:

TEST EQUIPMENT LIST				
Description	**Manufacturer**	**Model**	**Asset**	**Cal Due**
Antenna, Horn, 18 GHz	EMCO	3115	C00872	10/25/14
Antenna, Horn, 18 GHz	EMCO	3115	C00783	10/25/14
Preamplifier, 1300 MHz	Agilent / HP	8447D	C00885	12/11/14
Spectrum Analyzer, 44 GHz	Agilent / HP	E4446A	C01179	02/26/15
Preamplifier, 26.5 GHz	Agilent / HP	8449B	C01063	10/22/14
Communication Test Set	Agilent / HP	E5515C	C01086	06/20/14
Temperature / Humidity Chamber	Thermotron	SE 600-10-10	C00930	01/09/15
Highpass Filter, 1.5 GHz	Micro-Tronics	HPM13193	N02689	CNR
Highpass Filter, 2.7 GHz	Micro-Tronics	HPM13194	N02687	CNR
Antenna, Biconolog, 30MHz-1 GHz	Sunol Sciences	JB1	C01016	08/14/14
Vector signal generator, 6 GHz	Agilent / HP	E4438C	None	07/06/14

UL VERIFICATION SERVICES INC. FORM NO: CCSUP4701I
47173 BENICIA STREET, FREMONT, CA 94538, USA TEL: (510) 771-1000 FAX: (510) 661-0888

This report shall not be reproduced except in full, without the written approval of UL Verification Services Inc.

7. Summary Table

FCC Part Section	RSS Section(s)	Test Description	Test Limit	Test Condition	Test Result	Worst Case
2.1049	N/A	Occupied Band width (99%)	N/A	Conducted	Pass	see original
22.917(a) 24.238(a) 27.53(g) 90.691	RSS-132(4.5.1) RSS-133(6.5.1) RSS-139(6.5.1)	Band Edge / Conducted Spurious Emission	-13dBm		Pass	see original
2.1046	N/A	Conducted output power	N/A		Pass	see original
22.355 24.235 27.54 90.213	RSS-132(4.3) RSS-133(6.3) RSS-139(6.3) RSS-199(4.3)	Frequency Stability	2.5PPM		Pass	see original
22.913(a)(2)	RSS-132(4.4)	Effective Radiated Power	38 dBm	Radiated	Pass	22.81dBm
27.50(b)(10)	N/A		34.77 dBm		Pass	
24.232(c)	RSS-133(6.4)	Equivalent Isotropic Radiated Power	33dBm		Pass	25.92dBm
27.50(d)(4)	RSS-139(6.4)		30dBm		Pass	
22.917(a) 24.238(a) 27.53(g)	RSS-132(4.5.1) RSS-133(6.5.1) RSS-139(6.5.1)	Radiated Spurious Emission	-13dBm		Pass	-22.4dBm

UL VERIFICATION SERVICES INC. FORM NO: CCSUP4701I
47173 BENICIA STREET, FREMONT, CA 94538, USA TEL: (510) 771-1000 FAX: (510) 661-0888

This report shall not be reproduced except in full, without the written approval of UL Verification Services Inc.

8.1. CDMA2000

8.1.1. 1xRTT

TEST PROCEDURE

This procedure assumes the Agilest 8960 Test Set has the following applications installed and with valid license.

Application	Rev, License
CDMA2000 Mobile Test	B.13.08, L

- Call Setup > Shift & Preset
- Cell Info > Cell Parameters > System ID (SID) > 7
  > Network ID (NID) > 1
- Protocol Rev > 6 (IS-2000-0)
- Radio Config (RC) > Please see following table or details
- FCH Service Option (SO) Setup > Please see following table or details
- Traffic Data Rate > Full
- TDSO SCH Info > F-SCH Parameters > F-SCH Data Rate > 153.6 kbps
  > R-SCH Parameters > R-SCH Data Rate > 153.6 kbps
- Rvs Power Ctrl > Active bits
  - Rvs Power Ctrl > All Up bits (Maximum TxPout)

UL VERIFICATION SERVICES INC. FORM NO: CCSUP4701I
47173 BENICIA STREET, FREMONT, CA 94538, USA TEL: (510) 771-1000 FAX: (510) 661-0888

This report shall not be reproduced except in full, without the written approval of UL Verification Services Inc.

8.1.2. CDMA2000 OUTPUT POWER RESULT

1xRTT **Full Power**

Band	Mode	Ch	Freq. (MHz)	Avg Pwr (dBm)
BC 0	RC1, SO55 (Loopback)	1013	824.70	25.1
		384	836.52	25.3
		777	848.31	25.1
	RC3, SO55 (Loopback)	1013	824.70	25.1
		384	836.52	25.2
		777	848.31	25.0
	RC3, SO32 (+F-SCH)	1013	824.70	25.1
		384	836.52	25.2
		777	848.31	25.1

1xRTT **Full Power**

Band	Mode	Ch	Freq. (MHz)	Avg Pwr (dBm)
BC 1	RC1 SO55 (Loopback)	25	1851.25	24.5
		600	1880.00	24.5
		1175	1908.75	24.5
	RC3 SO55 (Loopback)	25	1851.25	24.5
		600	1880.00	24.5
		1175	1908.75	24.5
	RC3 SO32 (+F-SCH)	25	1851.25	24.5
		600	1880.00	24.5
		1175	1908.75	24.5

UL VERIFICATION SERVICES INC. FORM NO: CCSUP4701I
47173 BENICIA STREET, FREMONT, CA 94538, USA TEL: (510) 771-1000 FAX: (510) 661-0888

This report shall not be reproduced except in full, without the written approval of UL Verification Services Inc.

8.1.3. 1xEV-DO Release 0

TEST PROCEDURE

This procedure assumes the Agilent 8960 Test Set has the following applications installed and with valid license.

Application	Rev, License
1xEV-DO Terminal Test	A.09.13

EVDO Release 0 - RTAP

- Call Setup > Shift & Preset
- Call Control:
  - Access Network Info > Cell Parameters > Sector ID > 00000000 > Subnet Mask > 0
  - Generator Info > Termination Parameters > Max Forward Packet Duration > 16 Slots
- Call Parms:
  - Cell Power > -105.5 dBm/1.23 MHz
  - Cell Band > (Select US Cellular or US PCS)
  - Channel > (Enter channel number)
  - Application Config > Enhanced Test Application Protocol > RTAP
  - RTAP Rate > 153.6 kbps
  - Rvs Power Ctrl > Active bits
  - Protocol Rel > 0 (1xEV-DO)
- Press “Start Data Connection” when “Session Open” appear in “Active Cell”
- Rvs Power Ctrl > All Up bits (Maximum TxPout)

EVDO Release 0 - FTAP

- Call Setup > Shift & Preset
- Call Control:
  - Access Network Info > Cell Parameters > Sector ID > 00000000 > Subnet Mask > 0
  - Generator Info > Termination Parameters > Max Forward Packet Duration > 16 Slots
- Call Parms:
  - Cell Power > -105.5 dBm/1.23 MHz
  - Cell Band > (Select US Cellular or US PCS)
  - Channel > (Enter channel number)
  - Application Config > Enhanced Test Application Protocol > FTAP (default)
  - FTAP Rate > 307.2 kbps (2 Slot, QPSK)
  - Rvs Power Ctrl > Active bits
  - Protocol Rel > 0 (1xEV-DO)
- Press “Start Data Connection” when “Session Open” appear in “Active Cell”
- Rvs Power Ctrl > All Up bits (Maximum TxPout)

UL VERIFICATION SERVICES INC. FORM NO: CCSUP4701I
47173 BENICIA STREET, FREMONT, CA 94538, USA TEL: (510) 771-1000 FAX: (510) 661-0888

This report shall not be reproduced except in full, without the written approval of UL Verification Services Inc.

8.1.4. 1XEVDO REL 0 OUTPUT POWER RESULT

1xEv-Do Rel. 0

Band	FTAP Rate	Channel	f (MHz)	Avg Pwr (dBm)
BC0	307.2 kbps (2 slot, QPSK)	1013	824.70	25.2
		384	836.52	25.3
		777	848.31	25.2

1xEv-Do Rel. 0

Band	FTAP Rate	Channel	f (MHz)	Avg Pwr (dBm)
BC 1	307.2 kbps (2 slot, QPSK)	25	1851.25	24.5
		600	1880.00	24.5
		1175	1908.75	24.5

UL VERIFICATION SERVICES INC. FORM NO: CCSUP4701I
47173 BENICIA STREET, FREMONT, CA 94538, USA TEL: (510) 771-1000 FAX: (510) 661-0888

This report shall not be reproduced except in full, without the written approval of UL Verification Services Inc.

8.1.5. 1xEV-DO Rev. A

TEST PROCEDURE

This procedure assumes the Agilent 8960 Test Set has the following applications installed and with valid license.

Application	Rev, License
1xEV-DO Terminal Test	A.09.13

EVDO Release A – RETAP

- Call Setup > Shift & Preset
- Cell Power > -60 dBm/1.23 MHz
- Protocol Rev > A (1xEV-DO-A)
- Application Config > Enhanced Test Application Protocol > RETAP
- R-Data Pkt Size > 4096
- Protocol Subtype Config > Release A Physical Layer Subtype > Subtype 2

> PL Subtype 2 Access Channel MAC Subtype > Default (Subtype 0)

- Access Network Info > Cell Parameters > Sector ID > 00000000 > Subnet Mask > 0
- Generator Info > Termination Parameters > Max Forward Packet Duration >16 Slots > ACK R-Data After > Subpacket 0 (All ACK)
- Rvs Power Ctrl > All Up bits (to get the maximum power)

EVDO Release A - FETAP

- Call Setup > Shift & Preset
- Cell Power > -60 dBm/1.23 MHz
- Protocol Rev > A (1xEV-DO-A)
- Application Config > Enhanced Test Application Protocol > FETAP
- F-Traffic Format > 4 (1024, 2,128) Canonical (307.2k, QPSK)
- Protocol Subtype Config > Release A Physical Layer Subtype > Subtype 2

> PL Subtype 2 Access Channel MAC Subtype > Default (Subtype 0)

- Access Network Info > Cell Parameters > Sector ID > 00000000 > Subnet Mask > 0
- Generator Info > Termination Parameters > Max Forward Packet Duration >16 Slots > ACK R-Data After > Subpacket 0 (All ACK)
- Rvs Power Ctrl > All Up bits (to get the maximum power)

UL VERIFICATION SERVICES INC. FORM NO: CCSUP4701I
47173 BENICIA STREET, FREMONT, CA 94538, USA TEL: (510) 771-1000 FAX: (510) 661-0888

This report shall not be reproduced except in full, without the written approval of UL Verification Services Inc.

8.1.6. 1xEVDO REV A OUTPUT RESULT

1xEv-Do Rev. A

Band	FETAP Traffic Format	Channel	f (MHz)	Avg Pwr (dBm)
BC0	307.2k, QPSK/ ACK channel is transmitted at all the slots	1013	824.70	25.2
		384	836.52	25.3
		777	848.31	25.2

1xEv-Do Rev. A

Band	FETAP Traffic Format	Channel	f (MHz)	Avg Pwr (dBm)
BC 1	307.2k, QPSK/ ACK channel is transmitted at all the slots	25	1851.25	24.4
		600	1880	24.4
		1175	1908.75	24.5

UL VERIFICATION SERVICES INC. FORM NO: CCSUP4701I
47173 BENICIA STREET, FREMONT, CA 94538, USA TEL: (510) 771-1000 FAX: (510) 661-0888

This report shall not be reproduced except in full, without the written approval of UL Verification Services Inc.

8.2. LTE OUTPUT VERIFICATION

8.2.1. LTE OUTPUT RESULT

Band	BW (MHz)	Mode	RB Allocation	RB Size	Target MPR	Avg Pwr (dBm)		
						20050	20175	20300
						1720 MHz	1732.5 MHz	1745 MHz
LTE Band 4	20	QPSK	1	0	0	24.7	24.7	24.7
			1	49	0	24.6	24.7	24.6
			1	99	0	24.6	24.6	24.7
			50	0	1	23.6	23.4	23.5
			50	25	1	23.6	23.6	23.5
			50	50	1	23.5	23.6	23.5
			100	0	1	23.5	23.5	23.6
		16QAM	1	0	1	23.6	23.5	23.7
			1	49	1	23.6	23.6	23.4
			1	99	1	23.5	23.3	23.7
			50	0	2	22.3	22.3	22.2
			50	25	2	22.3	22.5	21.9
			50	50	2	22.4	22.5	22.2
			100	0	2	22.4	22.4	22.3
Band	BW (MHz)	Mode	RB Allocation	RB Size	Target MPR	Avg Pwr (dBm)		
						20025	20175	20325
						1717.5 MHz	1732.5 MHz	1747.5 MHz
LTE Band 4	15	QPSK	1	0	0	24.5	24.6	24.7
			1	36	0	24.7	24.7	24.6
			1	74	0	24.5	24.7	24.7
			36	0	1	23.5	23.5	23.4
			36	18	1	23.6	23.6	23.5
			36	37	1	23.5	23.5	23.5
			75	0	1	23.6	23.6	23.5
		16QAM	1	0	1	23.3	23.6	23.6
			1	36	1	23.5	23.7	23.7
			1	74	1	23.2	23.7	23.7
			36	0	2	22.1	22.4	21.9
			36	18	2	22.3	22.5	22.1
			36	37	2	22.3	22.5	22.2
			75	0	2	22.3	22.5	22.2
Band	BW (MHz)	Mode	RB Allocation	RB Size	Target MPR	Avg Pwr (dBm)		
						20000	20175	20350
						1715 MHz	1732.5 MHz	1750 MHz
LTE Band 4	10	QPSK	1	0	0	24.5	24.6	24.5
			1	25	0	24.7	24.7	24.7

UL VERIFICATION SERVICES INC. FORM NO: CCSUP4701I
47173 BENICIA STREET, FREMONT, CA 94538, USA TEL: (510) 771-1000 FAX: (510) 661-0888

This report shall not be reproduced except in full, without the written approval of UL Verification Services Inc.

			1	49	0	24.6	24.7	24.7
			25	0	1	23.3	23.4	23.5
			25	12	1	23.4	23.5	23.6
			25	25	1	23.6	23.5	23.6
			50	0	1	23.5	23.6	23.6
		16QAM	1	0	1	23.2	23.7	23.2
			1	25	1	23.4	23.7	23.3
			1	49	1	23.3	23.7	23.6
			25	0	2	22.0	22.3	22.3
			25	12	2	22.2	22.4	22.3
			25	25	2	22.3	22.4	22.3
			50	0	2	22.3	22.5	22.3
Band	BW (MHz)	Mode	RB Allocation	RB Size	Target MPR	Avg Pwr (dBm)		
						19975	20175	20375
						1712.5 MHz	1732.5 MHz	1752.5 MHz
LTE Band 4	5	QPSK	1	0	0	24.6	24.7	24.7
			1	12	0	24.5	24.7	24.7
			1	24	0	24.6	24.7	24.7
			12	0	1	23.5	23.4	23.6
			12	6	1	23.4	23.5	23.7
			12	13	1	23.4	23.6	23.7
			25	0	1	23.3	23.6	23.6
		16QAM	1	0	1	23.3	23.4	23.4
			1	12	1	23.2	23.5	23.5
			1	24	1	23.3	23.5	23.6
			12	0	2	22.2	22.3	22.4
			12	6	2	22.2	22.4	22.5
			12	13	2	22.1	22.4	22.7
			25	0	2	22.1	22.4	22.5

UL VERIFICATION SERVICES INC. FORM NO: CCSUP4701I
47173 BENICIA STREET, FREMONT, CA 94538, USA TEL: (510) 771-1000 FAX: (510) 661-0888

This report shall not be reproduced except in full, without the written approval of UL Verification Services Inc.

Band	BW (MHz)	Mode	RB Allocation	RB Size	Target MPR	Avg Pwr (dBm)
						23230
						782 MHz
LTE Band 13	10	QPSK	1	0	0	24.7
			1	25	0	24.7
			1	49	0	24.7
			25	0	1	23.7
			25	12	1	23.7
			25	25	1	23.6
			50	0	1	23.7
		16QAM	1	0	1	23.7
			1	25	1	23.6
			1	49	1	23.6
			25	0	2	22.7
			25	12	2	22.7
			25	25	2	22.6
			50	0	2	22.6

UL VERIFICATION SERVICES INC. FORM NO: CCSUP4701I
47173 BENICIA STREET, FREMONT, CA 94538, USA TEL: (510) 771-1000 FAX: (510) 661-0888

This report shall not be reproduced except in full, without the written approval of UL Verification Services Inc.

9. RADIATED TEST RESULTS

9.1. RADIATED POWER (ERP & EIRP)

RULE PART(S)

FCC: §2.1046, §22.913, §24.232, and § 27.

LIMITS

22.913(a) - The ERP of mobile transmitters and auxiliary test transmitters must not exceed 7 Watts.

24.232(c) - Mobile/portable stations are limited to 2 watts e.i.r.p. peak power and the equipment must employ means to limit the power to the minimum necessary for successful communications.

In addition, when the transmitter power is measured in terms of average value, the peak-to-average ratio of the power shall not exceed 13dB.

TEST PROCEDURE

ANSI / TIA / EIA 603C Clause 2.2.17

MODES TESTED

CDMA2000 BC0/BC1; LTE B4/B13

UL VERIFICATION SERVICES INC. FORM NO: CCSUP4701I
47173 BENICIA STREET, FREMONT, CA 94538, USA TEL: (510) 771-1000 FAX: (510) 661-0888

This report shall not be reproduced except in full, without the written approval of UL Verification Services Inc.

TEST RESULTS

9.1.1. ERP/EIRP Results

Band	Mode	Channel	f(MHz)	ERP / EIRP	
				dBm	mW
BC1	1xRTT	25	1851.25	25.76	376.7
		600	1880	25.92	390.84
		1175	1908.75	25.47	352.37
	EVDO REL. 0	25	1851.25	24.67	293.09
		600	1880	25.00	316.23
		1175	1908.75	25.29	338.06

Band	Mode	Channel	f(MHz)	ERP / EIRP	
				dBm	mW
BC0	1xRTT	1013	824.7	21.341	136.18
		384	836.52	21.781	150.7
		777	848.31	22.011	158.89
	EVDO REL. 0	1013	824.7	21.94	156.31
		384	836.52	22.16	164.44
		777	848.31	22.81	190.99

UL VERIFICATION SERVICES INC. FORM NO: CCSUP4701I
47173 BENICIA STREET, FREMONT, CA 94538, USA TEL: (510) 771-1000 FAX: (510) 661-0888

This report shall not be reproduced except in full, without the written approval of UL Verification Services Inc.

9.1.2. LTE ERP/EIRP Results

Band	BW (MHz)	Mode	RB/RB Size	f (MHz)	ERP / EIRP	
					dBm	mW
LTE13	10	QPSK	1/0	782	21.40	138.04
		16QAM	1/0	782	20.35	108.39

Band	BW (MHz)	Mode	RB/RB Size	f (MHz)	ERP / EIRP	
					dBm	mW
LTE4	20	QPSK	1/0	1720	24.03	252.93
			1/0	1732.5	24.43	277.33
			1/0	1745	24.87	306.90
		16QAM	1/0	1720	22.49	177.42
			1/0	1732.5	23.40	218.78
			1/0	1745	23.7	234.42

Band	BW (MHz)	Mode	RB/RB Size	f (MHz)	ERP / EIRP	
					dBm	mW
LTE4	15	QPSK	1/0	1717.5	23.82	240.99
			1/0	1732.5	24.56	285.76
			1/0	1747.5	24.68	293.76
		16QAM	1/0	1717.5	23.52	224.91
			1/0	1732.5	24.52	283.14
			1/0	1747.5	24.60	288.40

Band	BW (MHz)	Mode	RB/RB Size	f (MHz)	ERP / EIRP	
					dBm	mW
LTE4	10	QPSK	1/0	1715	24.04	253.51
			1/0	1732.5	24.14	259.42
			1/0	1750	24.48	280.54
		16QAM	1/0	1715	23.04	201.37
			1/0	1732.5	23.21	209.41

UL VERIFICATION SERVICES INC. FORM NO: CCSUP4701I
47173 BENICIA STREET, FREMONT, CA 94538, USA TEL: (510) 771-1000 FAX: (510) 661-0888

This report shall not be reproduced except in full, without the written approval of UL Verification Services Inc.

			1/0	1750	23.47	222.33

Band	BW (MHz)	Mode	RB/RB Size	f (MHz)	ERP / EIRP	
					dBm	mW
LTE4	5	QPSK	1/0	1712.5	24.34	271.64
			1/0	1732.5	25.16	328.1
			1/0	1752.5	24.81	302.69
		16QAM	1/0	1712.5	24.29	268.53
			1/0	1732.5	24.31	269.77
			1/0	1752.5	23.92	246.6

UL VERIFICATION SERVICES INC. FORM NO: CCSUP4701I
47173 BENICIA STREET, FREMONT, CA 94538, USA TEL: (510) 771-1000 FAX: (510) 661-0888

This report shall not be reproduced except in full, without the written approval of UL Verification Services Inc.

9.1.3. ERP/EIRP DATA

Band

LTE13

10MHz

16QAM

High Frequency Substitution Measurement
Compliance Certification Services Chamber B

Company: LG
Project #: 14U17461
Date: 05/22/14
Test Engineer: D. Soper
Configuration: Z position
Mode: LTE_B13_10MHz_QPSK

Test Equipment:
Receiving: Sunol T243, and Chamber B Cable (Setup this one for testing EUT)
Substitution: Dipole S/N: 00022117, 8ft SMA Cable (SN # 208955002) Warehouse.

f MHz	SG reading (dBm)	Ant. Pol. (H/V)	Cable Loss (dB)	Antenna Gain (dBd)	ERP (dBm)	Limit (dBm)	Margin (dB)	Notes
Low Ch								
Mid Ch								
782.000	21.20	V	0.9	0.0	20.35	34.8	-14.4	
782.000	14.90	H	0.9	0.0	14.00	34.8	-20.8	
Mid Ch								
NEW								

Rev. 3.17.11

UL VERIFICATION SERVICES INC. FORM NO: CCSUP4701I
47173 BENICIA STREET, FREMONT, CA 94538, USA TEL: (510) 771-1000 FAX: (510) 661-0888

This report shall not be reproduced except in full, without the written approval of UL Verification Services Inc.

Band

LTE13

10MHz

QPSK

High Frequency Substitution Measurement
Compliance Certification Services Chamber B

Company: LG
Project #: 14U17461
Date: 05/22/14
Test Engineer: D. Soper
Configuration: Z position
Mode: LTE_B13_10MHz_QPSK

Test Equipment:
Receiving: Sunol T243, and Chamber B Cable (Setup this one for testing EUT)
Substitution: Dipole S/N: 00022117, 8ft SMA Cable (SN # 208955002) Warehouse.

f MHz	SG reading (dBm)	Ant. Pol. (H/V)	Cable Loss (dB)	Antenna Gain (dBd)	ERP (dBm)	Limit (dBm)	Margin (dB)	Notes
Low Ch								
Mid Ch								
782.000	22.30	V	0.9	0.0	21.40	34.8	-13.4	
782.000	16.50	H	0.9	0.0	15.60	34.8	-19.2	
Mid Ch								
NEW								

Rev. 3.17.11

UL VERIFICATION SERVICES INC. FORM NO: CCSUP4701I
47173 BENICIA STREET, FREMONT, CA 94538, USA TEL: (510) 771-1000 FAX: (510) 661-0888

This report shall not be reproduced except in full, without the written approval of UL Verification Services Inc.

Band

LTE4

20MHz

16QAM

High Frequency Fundamental Measurement
Compliance Certification Services Chamber B

Company: LG
Project #: 14U17461
Date: 05/22/14
Test Engineer: D. Soper
Configuration: EUT Z position
Mode: LTE_B4_20MHz_16QAM

Test Equipment:
Receiving: Horn T345, and Chamber B SMA Cables
Substitution: Horn T59 Substitution, 4ft SMA Cable (244639001) Warehouse

f GHz	SG reading (dBm)	Ant. Pol. (H/V)	Cable Loss (dB)	Antenna Gain (dBi)	EIRP (dBm)	Limit (dBm)	Delta (dB)	Notes
Low Ch								
1.720	11.7	V	0.85	8.29	19.11	30.0	-10.9	
1.720	15.1	H	0.85	8.29	22.49	30.0	-7.5	
Mid Ch								
1.732	12.4	V	0.85	8.29	19.81	30.0	-10.2	
1.732	16.0	H	0.85	8.29	23.40	30.0	-6.6	
High Ch								
1.745	13.8	V	0.85	8.29	21.23	30.0	-8.8	
1.745	16.3	H	0.85	8.29	23.70	30.0	-6.3	

Rev. 3.17.11

UL VERIFICATION SERVICES INC. FORM NO: CCSUP4701I
47173 BENICIA STREET, FREMONT, CA 94538, USA TEL: (510) 771-1000 FAX: (510) 661-0888

This report shall not be reproduced except in full, without the written approval of UL Verification Services Inc.

Band

LTE4

20MHz

QPSK

High Frequency Fundamental Measurement
Compliance Certification Services Chamber B

Company: LG
Project #: 14U17461
Date: 05/22/14
Test Engineer: D. Soper
Configuration: EUT Z position
Mode: LTE_B4_20MHz_QPSK

Test Equipment:
Receiving: Horn T345, and Chamber B SMA Cables
Substitution: Horn T59 Substitution, 4ft SMA Cable (244639001) Warehouse

f GHz	SG reading (dBm)	Ant. Pol. (H/V)	Cable Loss (dB)	Antenna Gain (dBi)	EIRP (dBm)	Limit (dBm)	Delta (dB)	Notes
Low Ch								
1.720	12.9	V	0.85	8.29	20.36	30.0	-9.6	
1.720	16.6	H	0.85	8.29	24.03	30.0	-6.0	
Mid Ch								
1.732	13.0	V	0.85	8.29	20.47	30.0	-9.5	
1.732	17.0	H	0.85	8.29	24.43	30.0	-5.6	
High Ch								
1.745	14.7	V	0.85	8.29	22.14	30.0	-7.9	
1.745	17.4	H	0.85	8.29	24.87	30.0	-5.1	

Rev. 3.17.11

UL VERIFICATION SERVICES INC. FORM NO: CCSUP4701I
47173 BENICIA STREET, FREMONT, CA 94538, USA TEL: (510) 771-1000 FAX: (510) 661-0888

This report shall not be reproduced except in full, without the written approval of UL Verification Services Inc.

Band

LTE4

15MHz

16QAM

High Frequency Fundamental Measurement
Compliance Certification Services Chamber B

Company: LG
Project #: 14U17461
Date: 05/22/14
Test Engineer: D. Soper
Configuration: EUT Z position
Mode: LTE_B4_15MHz_16QAM

Test Equipment:
Receiving: Horn T345, and Chamber B SMA Cables
Substitution: Horn T59 Substitution, 4ft SMA Cable (244639001) Warehouse

f GHz	SG reading (dBm)	Ant. Pol. (H/V)	Cable Loss (dB)	Antenna Gain (dBi)	EIRP (dBm)	Limit (dBm)	Delta (dB)	Notes
Low Ch								
1.718	13.3	V	0.85	8.29	20.74	30.0	-9.3	
1.718	16.1	H	0.85	8.29	23.52	30.0	-6.5	
Mid Ch								
1.732	12.4	V	0.85	8.29	19.82	30.0	-10.2	
1.732	17.1	H	0.85	8.29	24.52	30.0	-5.5	
High Ch								
1.748	13.4	V	0.85	8.29	20.83	30.0	-9.2	
1.748	17.2	H	0.85	8.29	24.60	30.0	-5.4	

Rev. 3.17.11

UL VERIFICATION SERVICES INC. FORM NO: CCSUP4701I
47173 BENICIA STREET, FREMONT, CA 94538, USA TEL: (510) 771-1000 FAX: (510) 661-0888

This report shall not be reproduced except in full, without the written approval of UL Verification Services Inc.

Band

LTE4

15MHz

QPSK

High Frequency Fundamental Measurement
Compliance Certification Services Chamber B

Company: LG
Project #: 14U17461
Date: 05/22/14
Test Engineer: D. Soper
Configuration: EUT Z position
Mode: LTE_B4_15MHz_QPSK

Test Equipment:
Receiving: Horn T345, and Chamber B SMA Cables
Substitution: Horn T59 Substitution, 4ft SMA Cable (244639001) Warehouse

f GHz	SG reading (dBm)	Ant. Pol. (H/V)	Cable Loss (dB)	Antenna Gain (dBi)	EIRP (dBm)	Limit (dBm)	Delta (dB)	Notes
Low Ch								
1.718	14.2	V	0.85	8.29	21.67	30.0	-8.3	
1.718	16.4	H	0.85	8.29	23.82	30.0	-6.2	
Mid Ch								
1.732	13.3	V	0.85	8.29	20.76	30.0	-9.2	
1.732	17.1	H	0.85	8.29	24.56	30.0	-5.4	
High Ch								
1.748	13.9	V	0.85	8.29	21.37	30.0	-8.6	
1.748	17.2	H	0.85	8.29	24.68	30.0	-5.3	

Rev. 3.17.11

UL VERIFICATION SERVICES INC. FORM NO: CCSUP4701I
47173 BENICIA STREET, FREMONT, CA 94538, USA TEL: (510) 771-1000 FAX: (510) 661-0888

This report shall not be reproduced except in full, without the written approval of UL Verification Services Inc.

Band

LTE4

10MHz

16QAM

High Frequency Fundamental Measurement
Compliance Certification Services Chamber A

Company: LG
Project #: 14U17461
Date: 05/22/14
Test Engineer: D. Soper
Configuration: EUT Z position
Mode: LTE_B4_10MHz_16QAM

Test Equipment:
Receiving: Horn T345, and Chamber A SMA Cables
Substitution: Horn T59 Substitution, 4ft SMA Cable (244639001) Warehouse

f GHz	SG reading (dBm)	Ant. Pol. (H/V)	Cable Loss (dB)	Antenna Gain (dBi)	EIRP (dBm)	Limit (dBm)	Delta (dB)	Notes
Low Ch								
1.715	10.9	V	0.85	8.29	18.36	30.0	-11.6	
1.715	15.6	H	0.85	8.29	23.04	30.0	-7.0	
Mid Ch								
1.733	12.1	V	0.85	8.29	19.56	30.0	-10.4	
1.733	15.8	H	0.85	8.29	23.21	30.0	-6.8	
High Ch								
1.750	12.1	V	0.85	7.92	19.18	30.0	-10.8	
1.750	16.4	H	0.85	7.92	23.47	30.0	-6.5	

Rev. 3.17.11

UL VERIFICATION SERVICES INC. FORM NO: CCSUP4701I
47173 BENICIA STREET, FREMONT, CA 94538, USA TEL: (510) 771-1000 FAX: (510) 661-0888

This report shall not be reproduced except in full, without the written approval of UL Verification Services Inc.

Band

LTE4

10MHz

QPSK

High Frequency Fundamental Measurement
Compliance Certification Services Chamber A

Company: LG
Project #: 14U17461
Date: 05/22/14
Test Engineer: D. Soper
Configuration: EUT Z position
Mode: LTE_B4_10MHz_QPSK

Test Equipment:
Receiving: Horn T345, and Chamber A SMA Cables
Substitution: Horn T59 Substitution, 4ft SMA Cable (244639001) Warehouse

f GHz	SG reading (dBm)	Ant. Pol. (H/V)	Cable Loss (dB)	Antenna Gain (dBi)	EIRP (dBm)	Limit (dBm)	Delta (dB)	Notes
Low Ch								
1.715	12.4	V	0.85	8.29	19.79	30.0	-10.2	
1.715	16.6	H	0.85	8.29	24.04	30.0	-6.0	
Mid Ch								
1.733	13.1	V	0.85	8.29	20.53	30.0	-9.5	
1.733	16.7	H	0.85	8.29	24.14	30.0	-5.9	
High Ch								
1.750	13.0	V	0.85	7.92	20.09	30.0	-9.9	
1.750	17.4	H	0.85	7.92	24.48	30.0	-5.5	

Rev. 3.17.11

UL VERIFICATION SERVICES INC. FORM NO: CCSUP4701I
47173 BENICIA STREET, FREMONT, CA 94538, USA TEL: (510) 771-1000 FAX: (510) 661-0888

This report shall not be reproduced except in full, without the written approval of UL Verification Services Inc.

Band

LTE4

5MHz

16QAM

High Frequency Fundamental Measurement
Compliance Certification Services Chamber B

Company: LG
Project #: 14U17461
Date: 05/22/14
Test Engineer: D. Soper
Configuration: EUT Z position
Mode: LTE_B4_5MHz_16QAM

Test Equipment:
Receiving: Horn T345, and Chamber B SMA Cables
Substitution: Horn T59 Substitution, 4ft SMA Cable (244639001) Warehouse

f GHz	SG reading (dBm)	Ant. Pol. (H/V)	Cable Loss (dB)	Antenna Gain (dBi)	EIRP (dBm)	Limit (dBm)	Delta (dB)	Notes
Low Ch								
1.713	12.0	V	0.85	8.29	19.42	30.0	-10.6	
1.713	16.9	H	0.85	8.29	24.29	30.0	-5.7	
Mid Ch								
1.733	12.1	V	0.85	8.29	19.56	30.0	-10.4	
1.733	16.9	H	0.85	8.29	24.31	30.0	-5.7	
High Ch								
1.753	12.6	V	0.85	7.92	19.66	30.0	-10.3	
1.753	16.9	H	0.85	7.92	23.92	30.0	-6.1	

Rev. 3.17.11

UL VERIFICATION SERVICES INC. FORM NO: CCSUP4701I
47173 BENICIA STREET, FREMONT, CA 94538, USA TEL: (510) 771-1000 FAX: (510) 661-0888

This report shall not be reproduced except in full, without the written approval of UL Verification Services Inc.

Band

LTE4

5MHz

QPSK

High Frequency Fundamental Measurement
Compliance Certification Services Chamber B

Company: LG
Project #: 14U17461
Date: 05/22/14
Test Engineer: D. Soper
Configuration: EUT Z position
Mode: LTE_B4_5MHz_QPSK

Test Equipment:
Receiving: Horn T345, and Chamber C SMA Cables
Substitution: Horn T59 Substitution, 4ft SMA Cable (244639001) Warehouse

f GHz	SG reading (dBm)	Ant. Pol. (H/V)	Cable Loss (dB)	Antenna Gain (dBi)	EIRP (dBm)	Limit (dBm)	Delta (dB)	Notes
Low Ch								
1.713	13.1	V	0.85	8.29	20.58	30.0	-9.4	
1.713	16.9	H	0.85	8.29	24.34	30.0	-5.7	
Mid Ch								
1.733	13.3	V	0.85	8.29	20.77	30.0	-9.2	
1.733	17.7	H	0.85	8.29	25.16	30.0	-4.8	
High Ch								
1.753	13.2	V	0.85	7.92	20.29	30.0	-9.7	
1.753	17.7	H	0.85	7.92	24.81	30.0	-5.2	

Rev. 3.17.11

UL VERIFICATION SERVICES INC. FORM NO: CCSUP4701I
47173 BENICIA STREET, FREMONT, CA 94538, USA TEL: (510) 771-1000 FAX: (510) 661-0888

This report shall not be reproduced except in full, without the written approval of UL Verification Services Inc.

Band

BC1

High Frequency Fundamental Measurement
Compliance Certification Services Chamber E

Company: LG
Project #: 14U17461
Date: 05/23/14
Test Engineer: D. Soper
Configuration: EUT, X Position
Mode: CDMA EVDO BC1

Test Equipment:
Receiving: T345, and Chamber E SMA Cables
Substitution: Horn T59 Substitution, 4ft SMA Cable (244639001) Warehouse

f GHz	SG reading (dBm)	Ant. Pol. (H/V)	Cable Loss (dB)	Antenna Gain (dBi)	EIRP (dBm)	Limit (dBm)	Delta (dB)	Notes
Low Ch								
1.851	17.0	V	0.85	7.90	24.09	33.0	-8.9	
1.851	17.6	H	0.85	7.90	24.67	33.0	-8.3	
Mid Ch								
1.880	15.3	V	0.85	7.90	22.35	33.0	-10.7	
1.880	18.0	H	0.85	7.90	25.00	33.0	-8.0	
High Ch								
1.909	10.7	V	0.85	7.80	17.61	33.0	-15.4	
1.909	18.3	H	0.85	7.80	25.29	33.0	-7.7	

Rev. 3.17.11

UL VERIFICATION SERVICES INC. FORM NO: CCSUP4701I
47173 BENICIA STREET, FREMONT, CA 94538, USA TEL: (510) 771-1000 FAX: (510) 661-0888

This report shall not be reproduced except in full, without the written approval of UL Verification Services Inc.

Band

BC1

1xRTT

High Frequency Fundamental Measurement
Compliance Certification Services Chamber E

Company: LG
Project #: 14U17461
Date: 05/23/14
Test Engineer: D. Soper
Configuration: EUT, X Position
Mode: CDMA RTT BC1

Test Equipment:
Receiving: T345, and Chamber E SMA Cables
Substitution: Horn T59 Substitution, 4ft SMA Cable (244639001) Warehouse

f GHz	SG reading (dBm)	Ant. Pol. (H/V)	Cable Loss (dB)	Antenna Gain (dBi)	EIRP (dBm)	Limit (dBm)	Delta (dB)	Notes
Low Ch								
1.851	18.4	V	0.85	7.90	25.40	33.0	-7.6	
1.851	18.7	H	0.85	7.90	25.76	33.0	-7.2	
Mid Ch								
1.880	16.6	V	0.85	7.90	23.65	33.0	-9.4	
1.880	18.9	H	0.85	7.90	25.92	33.0	-7.1	
High Ch								
1.909	16.8	V	0.85	7.80	23.78	33.0	-9.2	
1.909	18.5	H	0.85	7.80	25.47	33.0	-7.5	

Rev. 3.17.11

UL VERIFICATION SERVICES INC. FORM NO: CCSUP4701I
47173 BENICIA STREET, FREMONT, CA 94538, USA TEL: (510) 771-1000 FAX: (510) 661-0888

This report shall not be reproduced except in full, without the written approval of UL Verification Services Inc.

Band

BC0

High Frequency Substitution Measurement
Compliance Certification Services Chamber E

Company: LG
Project #: 14U17461
Date: 05/23/14
Test Engineer: D. Soper
Configuration: EUT, X Position
Mode: CDMA EVDO BC0

Test Equipment:
Receiving: Sunol T243, and Chamber E Cable (Setup this one for testing EUT)
Substitution: Dipole S/N: 00022117, 8ft SMA Cable (SN # 208955002) Warehouse.

f MHz	SG reading (dBm)	Ant. Pol. (H/V)	Cable Loss (dB)	Antenna Gain (dBd)	ERP (dBm)	Limit (dBm)	Margin (dB)	Notes
Low Ch								
824.70	14.55	V	0.9	0.0	13.65	38.5	-24.8	
824.70	22.84	H	0.9	0.0	21.94	38.5	-16.5	
Mid Ch								
836.52	14.20	V	0.9	0.0	13.30	38.5	-25.1	
836.52	23.06	H	0.9	0.0	22.16	38.5	-16.3	
High Ch								
848.31	15.00	V	0.9	0.0	14.10	38.5	-24.3	
848.31	23.71	H	0.9	0.0	22.81	38.5	-15.6	

Rev. 3.17.11

UL VERIFICATION SERVICES INC. FORM NO: CCSUP4701I
47173 BENICIA STREET, FREMONT, CA 94538, USA TEL: (510) 771-1000 FAX: (510) 661-0888

This report shall not be reproduced except in full, without the written approval of UL Verification Services Inc.

Band

BC0

1xRTT

High Frequency Substitution Measurement
Compliance Certification Services Chamber E

Company: LG
Project #: 14U17461
Date: 05/23/14
Test Engineer: D. Soper
Configuration: EUT, X Position
Mode: CDMA RTT BC0

Test Equipment:
Receiving: Sunol T243, and Chamber E Cable (Setup this one for testing EUT)
Substitution: Dipole S/N: 00022117, 8ft SMA Cable (SN # 208955002) Warehouse.

f MHz	SG reading (dBm)	Ant. Pol. (H/V)	Cable Loss (dB)	Antenna Gain (dBd)	ERP (dBm)	Limit (dBm)	Margin (dB)	Notes
Low Ch								
824.70	14.50	V	0.9	0.0	13.60	38.5	-24.8	
824.70	22.24	H	0.9	0.0	21.34	38.5	-17.1	
Mid Ch								
836.52	15.20	V	0.9	0.0	14.30	38.5	-24.1	
836.52	22.68	H	0.9	0.0	21.78	38.5	-16.7	
High Ch								
848.31	15.06	V	0.9	0.0	14.16	38.5	-24.3	
848.31	22.91	H	0.9	0.0	22.01	38.5	-16.4	

Rev. 3.17.11

UL VERIFICATION SERVICES INC. FORM NO: CCSUP4701I
47173 BENICIA STREET, FREMONT, CA 94538, USA TEL: (510) 771-1000 FAX: (510) 661-0888

This report shall not be reproduced except in full, without the written approval of UL Verification Services Inc.

9.2. FIELD STRENGTH OF SPURIOUS RADIATION

RULE PART(S)

FCC: §2.1053, §22.917, §24.238, §27

LIMIT

§22.917 (e) and §24.238 (a): Out of band emissions. The power of any emission outside of the authorized operating frequency ranges must be attenuated below the transmitting power (P) by a factor of at least 43 + 10 log (P) dB

TEST PROCEDURE

For Cellular equipment - Compliance with these rules is based on the use of measurement instrumentation employing a resolution bandwidth of 100 kHz or greater. In the 1 MHz bands immediately outside and adjacent to the frequency block a resolution bandwidth of at least one percent of the emission bandwidth of the fundamental emission of the transmitter may be employed. A narrower resolution bandwidth is permitted in all cases to improve measurement accuracy provided the measured power is integrated over the full required measurement bandwidth (i.e. 100 kHz or 1 percent of emission bandwidth, as specified). The emission bandwidth is defined as the width of the signal between two points, one below the carrier center frequency and one above the carrier center frequency, outside of which all emissions are attenuated at least 26 dB below the transmitter power.

For PCS equipment - Compliance with these rules is based on the use of measurement instrumentation employing a resolution bandwidth of 1 MHz or greater. However, in the 1 MHz bands immediately outside and adjacent to the frequency block a resolution bandwidth of at least one percent of the emission bandwidth of the fundamental emission of the transmitter may be employed. A narrower resolution bandwidth is permitted in all cases to improve measurement accuracy provided the measured power is integrated over the full required measurement bandwidth (i.e. 1 MHz or 1 percent of emission bandwidth, as specified). The emission bandwidth is defined as the width of the signal between two points, one below the carrier center frequency and one above the carrier center frequency, outside of which all emissions are attenuated at least 26 dB below the transmitter power.

RESULTS

UL VERIFICATION SERVICES INC. FORM NO: CCSUP4701I
47173 BENICIA STREET, FREMONT, CA 94538, USA TEL: (510) 771-1000 FAX: (510) 661-0888

This report shall not be reproduced except in full, without the written approval of UL Verification Services Inc.

9.2.1. SPURIOUS RADIATION DATA

Compliance Certification Services
Above 1GHz High Frequency Substitution Measurement

Company: LG
Project #: 14U17461
Date: 05/28/14
Test Engineer: D. Soper
Configuration: EUT / AC Adapter
Mode: TX, LTE band 13, 10MHz BW, 16QAM

Chamber	Pre-amplifer	Filter	Limit
3m Chamber	T145 8449B	Filter 1	

Band	f GHz	SG reading (dBm)	Ant. Pol. (H/V)	Distance (m)	Preamp (dB)	Filter (dB)	ERP (dBm)	Limit (dBm)	Delta (dB)	Notes
	Low Ch, (779.5 MHz)									
LTE13										
	Mid Ch, (782 MHz)									
10MHz	1.564	7.3	V	3.0	30.7	1.0	-22.4	-13.0	-9.4	
	2.346	-12.0	V	3.0	28.9	1.0	-39.9	-13.0	-26.9	
16QAM	3.128	-20.6	V	3.0	26.8	1.0	-46.4	-13.0	-33.4	
	1.564	-6.7	H	3.0	30.7	1.0	-36.4	-13.0	-23.4	
	2.346	-23.8	H	3.0	28.9	1.0	-51.6	-13.0	-38.6	
	3.128	-21.0	H	3.0	26.8	1.0	-46.8	-13.0	-33.8	
	High Ch, (784.5 MHz)									

Rev. 03.03.09
Note: No other emissions were detected above the system noise floor.

UL VERIFICATION SERVICES INC. FORM NO: CCSUP4701I
47173 BENICIA STREET, FREMONT, CA 94538, USA TEL: (510) 771-1000 FAX: (510) 661-0888

This report shall not be reproduced except in full, without the written approval of UL Verification Services Inc.

Band

LTE13

10MHz

QPSK

Compliance Certification Services
Above 1GHz High Frequency Substitution Measurement

Company: LG
Project #: 14U17461
Date: 05/28/14
Test Engineer: D. Soper
Configuration: EUT / AC Adapter
Mode: TX, LTE band 13, 10MHz BW, QPSK

Chamber	Pre-amplifer	Filter	Limit
3m Chamber	T145 8449B	Filter 1	

f GHz	SG reading (dBm)	Ant. Pol. (H/V)	Distance (m)	Preamp (dB)	Filter (dB)	ERP (dBm)	Limit (dBm)	Delta (dB)	Notes
Low Ch, (779.5 MHz)									
Mid Ch, (782 MHz)									
1.564	6.8	V	3.0	30.7	1.0	-22.9	-13.0	-9.9	
2.346	-13.1	V	3.0	28.9	1.0	-41.0	-13.0	-28.0	
3.128	-20.7	V	3.0	26.8	1.0	-46.6	-13.0	-33.6	
1.564	-6.7	H	3.0	30.7	1.0	-36.4	-13.0	-23.4	
2.346	-23.4	H	3.0	28.9	1.0	-51.3	-13.0	-38.3	
3.128	-20.9	H	3.0	26.8	1.0	-46.7	-13.0	-33.7	
High Ch, (784.5 MHz)									

Rev. 03.03.09

UL VERIFICATION SERVICES INC. FORM NO: CCSUP4701I
47173 BENICIA STREET, FREMONT, CA 94538, USA TEL: (510) 771-1000 FAX: (510) 661-0888

This report shall not be reproduced except in full, without the written approval of UL Verification Services Inc.

Compliance Certification Services
Above 1GHz High Frequency Substitution Measurement

Company: LG
Project #: 14U17461
Date: 05/28/14
Test Engineer: D. Soper
Configuration: EUT / AC Adapter
Mode: TX, LTE band 4, 20MHz BW, 16QAM

Chamber	Pre-amplifer	Filter	Limit
3m Chamber	T145 8449B	Filter 1	

Band
LTE4
20MHz
16QAM

f GHz	SG reading (dBm)	Ant. Pol. (H/V)	Distance (m)	Preamp (dB)	Filter (dB)	ERP (dBm)	Limit (dBm)	Delta (dB)	Notes
Low Ch, (1720 MHz)									
3.440	-21.6	V	3.0	30.4	1.0	-51.0	-13.0	-38.0	
5.160	-15.6	V	3.0	28.7	1.0	-43.4	-13.0	-30.4	
6.880	-16.9	V	3.0	27.1	1.0	-43.1	-13.0	-30.1	
3.440	-22.5	H	3.0	30.4	1.0	-51.9	-13.0	-38.9	
5.160	-16.0	H	3.0	28.7	1.0	-43.8	-13.0	-30.8	
6.880	-16.2	H	3.0	27.1	1.0	-42.3	-13.0	-29.3	
Mid Ch, (1732.5 MHz)									
3.465	-19.4	V	3.0	30.4	1.0	-48.8	-13.0	-35.8	
5.198	-16.7	V	3.0	28.7	1.0	-44.4	-13.0	-31.4	
6.930	-16.9	V	3.0	27.1	1.0	-42.9	-13.0	-29.9	
3.465	-22.7	H	3.0	30.4	1.0	-52.1	-13.0	-39.1	
5.198	-15.3	H	3.0	28.7	1.0	-43.0	-13.0	-30.0	
6.930	-16.0	H	3.0	27.1	1.0	-42.1	-13.0	-29.1	
High Ch, (1745 MHz)									
3.490	-20.5	V	3.0	30.4	1.0	-49.9	-13.0	-36.9	
5.235	-16.9	V	3.0	28.7	1.0	-44.6	-13.0	-31.6	
6.980	-16.9	V	3.0	27.0	1.0	-42.9	-13.0	-29.9	
3.490	-21.6	H	3.0	30.4	1.0	-51.0	-13.0	-38.0	
5.235	-17.2	H	3.0	28.7	1.0	-44.9	-13.0	-31.9	
6.980	-15.8	H	3.0	27.0	1.0	-41.8	-13.0	-28.8	

Rev. 03.03.09

UL VERIFICATION SERVICES INC. FORM NO: CCSUP4701I
47173 BENICIA STREET, FREMONT, CA 94538, USA TEL: (510) 771-1000 FAX: (510) 661-0888

This report shall not be reproduced except in full, without the written approval of UL Verification Services Inc.

Compliance Certification Services
Above 1GHz High Frequency Substitution Measurement

Company: LG
Project #: 14U17461
Date: 05/28/14
Test Engineer: D. Soper
Configuration: EUT / AC Adapter
Mode: TX, LTE band 4, 20MHz BW, QPSK

Chamber	Pre-amplifer	Filter	Limit
3m Chamber	T145 8449B	Filter 1	

Band: LTE4 20MHz QPSK

f GHz	SG reading (dBm)	Ant. Pol. (H/V)	Distance (m)	Preamp (dB)	Filter (dB)	ERP (dBm)	Limit (dBm)	Delta (dB)	Notes
Low Ch, (1720 MHz)									
3.440	-24.6	V	3.0	30.4	1.0	-54.0	-13.0	-41.0	
5.160	-17.0	V	3.0	28.7	1.0	-44.7	-13.0	-31.7	
6.880	-12.6	V	3.0	27.1	1.0	-38.7	-13.0	-25.7	
3.440	-24.2	H	3.0	30.4	1.0	-53.6	-13.0	-40.6	
5.160	-18.3	H	3.0	28.7	1.0	-46.0	-13.0	-33.0	
6.880	-10.5	H	3.0	27.1	1.0	-36.6	-13.0	-23.6	
Mid Ch, (1732.5 MHz)									
3.465	-21.7	V	3.0	30.4	1.0	-51.1	-13.0	-38.1	
5.198	-16.1	V	3.0	28.7	1.0	-43.8	-13.0	-30.8	
6.930	-16.7	V	3.0	27.1	1.0	-42.8	-13.0	-29.8	
3.465	-23.4	H	3.0	30.4	1.0	-52.8	-13.0	-39.8	
5.198	-18.1	H	3.0	28.7	1.0	-45.8	-13.0	-32.8	
6.930	-16.0	H	3.0	27.1	1.0	-42.1	-13.0	-29.1	
High Ch, (1745 MHz)									
3.490	-21.3	V	3.0	30.4	1.0	-50.7	-13.0	-37.7	
5.235	-17.0	V	3.0	28.7	1.0	-44.6	-13.0	-31.6	
6.980	-16.8	V	3.0	27.0	1.0	-42.8	-13.0	-29.8	
3.490	-20.8	H	3.0	30.4	1.0	-50.1	-13.0	-37.1	
5.235	-15.5	H	3.0	28.7	1.0	-43.2	-13.0	-30.2	
6.980	-15.9	H	3.0	27.0	1.0	-41.9	-13.0	-28.9	

Rev. 03.03.09

UL VERIFICATION SERVICES INC. FORM NO: CCSUP4701I
47173 BENICIA STREET, FREMONT, CA 94538, USA TEL: (510) 771-1000 FAX: (510) 661-0888

This report shall not be reproduced except in full, without the written approval of UL Verification Services Inc.

Compliance Certification Services
Above 1GHz High Frequency Substitution Measurement

Company: LG
Project #: 14U17461
Date: 05/22/14
Test Engineer: O. Stoelting
Configuration: EUT Z position, AC Charger, Headphones
Mode: TX, LTE band 4, 15MHz BW, 16QAM

Chamber	Pre-amplifer	Filter	Limit
5m Chamber A	T145 8449B	Filter 1	

Band: LTE4, 15MHz, 16QAM

f GHz	SG reading (dBm)	Ant. Pol. (H/V)	Distance (m)	Preamp (dB)	Filter (dB)	ERP (dBm)	Limit (dBm)	Delta (dB)	Notes
Low Ch, (1717.5 MHz)									
3.435	-33.9	V	3.0	30.4	1.0	-63.3	-13.0	-50.3	
5.153	-36.2	V	3.0	28.7	1.0	-64.0	-13.0	-51.0	
6.870	-37.0	V	3.0	27.1	1.0	-63.1	-13.0	-50.1	
3.435	-33.3	H	3.0	30.4	1.0	-62.7	-13.0	-49.7	
5.153	-31.6	H	3.0	28.7	1.0	-59.4	-13.0	-46.4	
6.870	-35.7	H	3.0	27.1	1.0	-61.8	-13.0	-48.8	
Mid Ch, (1732.5 MHz)									
3.465	-30.8	V	3.0	30.4	1.0	-60.2	-13.0	-47.2	
5.198	-37.2	V	3.0	28.7	1.0	-64.9	-13.0	-51.9	
6.930	-37.3	V	3.0	27.1	1.0	-63.3	-13.0	-50.3	
3.465	-36.4	H	3.0	30.4	1.0	-65.8	-13.0	-52.8	
5.198	-33.5	H	3.0	28.7	1.0	-61.2	-13.0	-48.2	
6.930	-35.4	H	3.0	27.1	1.0	-61.5	-13.0	-48.5	
High Ch, (1747.5 MHz)									
3.495	-32.8	V	3.0	30.4	1.0	-62.2	-13.0	-49.2	
5.243	-29.5	V	3.0	28.7	1.0	-57.1	-13.0	-44.1	
6.990	-34.7	V	3.0	27.0	1.0	-60.7	-13.0	-47.7	
3.495	-35.1	H	3.0	30.4	1.0	-64.5	-13.0	-51.5	
5.243	-37.2	H	3.0	28.7	1.0	-64.9	-13.0	-51.9	
6.990	-36.0	H	3.0	27.0	1.0	-62.0	-13.0	-49.0	

Rev. 03.03.09

UL VERIFICATION SERVICES INC. FORM NO: CCSUP4701I
47173 BENICIA STREET, FREMONT, CA 94538, USA TEL: (510) 771-1000 FAX: (510) 661-0888

This report shall not be reproduced except in full, without the written approval of UL Verification Services Inc.

Compliance Certification Services
Above 1GHz High Frequency Substitution Measurement

Company: LG
Project #: 14U17461
Date: 05/22/14
Test Engineer: O. Stoelting
Configuration: EUT Z position, AC Charger, Headphones
Mode: TX, LTE band 4, 15MHz BW, QPSK

Chamber	Pre-amplifer	Filter	Limit
5m Chamber A	T145 8449B	Filter 1	

Band: LTE4 15MHz QPSK

f GHz	SG reading (dBm)	Ant. Pol. (H/V)	Distance (m)	Preamp (dB)	Filter (dB)	ERP (dBm)	Limit (dBm)	Delta (dB)	Notes
Low Ch, (1717.5 MHz)									
3.435	-34.0	V	3.0	30.4	1.0	-63.4	-13.0	-50.4	
5.153	-36.8	V	3.0	28.7	1.0	-64.5	-13.0	-51.5	
6.870	-37.1	V	3.0	27.1	1.0	-63.2	-13.0	-50.2	
3.435	-33.0	H	3.0	30.4	1.0	-62.4	-13.0	-49.4	
5.153	-31.4	H	3.0	28.7	1.0	-59.2	-13.0	-46.2	
6.870	-35.8	H	3.0	27.1	1.0	-61.9	-13.0	-48.9	
Mid Ch, (1732.5 MHz)									
3.465	-30.9	V	3.0	30.4	1.0	-60.3	-13.0	-47.3	
5.198	-37.2	V	3.0	28.7	1.0	-64.9	-13.0	-51.9	
6.930	-37.2	V	3.0	27.1	1.0	-63.2	-13.0	-50.2	
3.465	-36.2	H	3.0	30.4	1.0	-65.6	-13.0	-52.6	
5.198	-34.0	H	3.0	28.7	1.0	-61.7	-13.0	-48.7	
6.930	-36.1	H	3.0	27.1	1.0	-62.2	-13.0	-49.2	
High Ch, (1747.5 MHz)									
3.495	-33.0	V	3.0	30.4	1.0	-62.4	-13.0	-49.4	
5.243	-29.6	V	3.0	28.7	1.0	-57.3	-13.0	-44.3	
6.990	-34.8	V	3.0	27.0	1.0	-60.9	-13.0	-47.9	
3.495	-35.2	H	3.0	30.4	1.0	-64.6	-13.0	-51.6	
5.243	-37.7	H	3.0	28.7	1.0	-65.4	-13.0	-52.4	
6.990	-36.2	H	3.0	27.0	1.0	-62.2	-13.0	-49.2	

Rev. 03.03.09

UL VERIFICATION SERVICES INC. FORM NO: CCSUP4701I
47173 BENICIA STREET, FREMONT, CA 94538, USA TEL: (510) 771-1000 FAX: (510) 661-0888

This report shall not be reproduced except in full, without the written approval of UL Verification Services Inc.

Compliance Certification Services
Above 1GHz High Frequency Substitution Measurement

Company: LG
Project #: 14U17461
Date: 05/22/14
Test Engineer: O. Stoelting
Configuration: EUT Z position, AC Charger, Headphones
Mode: TX, LTE band 4, 10MHz BW, 16QAM

Chamber	Pre-amplifer	Filter	Limit
5m Chamber A	T145 8449B	Filter 1	

Band: LTE4, 10MHz, 16QAM

f GHz	SG reading (dBm)	Ant. Pol. (H/V)	Distance (m)	Preamp (dB)	Filter (dB)	ERP (dBm)	Limit (dBm)	Delta (dB)	Notes
Low Ch, (1715 MHz)									
3.430	-25.5	V	3.0	30.4	1.0	-54.9	-13.0	-41.9	
5.145	-31.5	V	3.0	28.8	1.0	-59.3	-13.0	-46.3	
6.860	-37.3	V	3.0	27.1	1.0	-63.5	-13.0	-50.5	
3.430	-34.6	H	3.0	30.4	1.0	-64.0	-13.0	-51.0	
5.145	-36.0	H	3.0	28.8	1.0	-63.7	-13.0	-50.7	
6.860	-36.3	H	3.0	27.1	1.0	-62.4	-13.0	-49.4	
Mid Ch, (1732.5 MHz)									
3.465	-34.0	V	3.0	30.4	1.0	-63.4	-13.0	-50.4	
5.198	-37.1	V	3.0	28.7	1.0	-64.8	-13.0	-51.8	
6.930	-37.0	V	3.0	27.1	1.0	-63.1	-13.0	-50.1	
3.465	-27.0	H	3.0	30.4	1.0	-56.4	-13.0	-43.4	
5.198	-35.7	H	3.0	28.7	1.0	-63.4	-13.0	-50.4	
6.930	-36.0	H	3.0	27.1	1.0	-62.1	-13.0	-49.1	
High Ch, (1750 MHz)									
3.500	-35.8	V	3.0	30.4	1.0	-65.1	-13.0	-52.1	
5.250	-35.6	V	3.0	28.7	1.0	-63.2	-13.0	-50.2	
7.000	-37.3	V	3.0	27.0	1.0	-63.3	-13.0	-50.3	
3.500	-35.5	H	3.0	30.4	1.0	-64.8	-13.0	-51.8	
5.250	-37.0	H	3.0	28.7	1.0	-64.7	-13.0	-51.7	
7.000	-36.3	H	3.0	27.0	1.0	-62.3	-13.0	-49.3	

Rev. 03.03.09

UL VERIFICATION SERVICES INC. FORM NO: CCSUP4701I
47173 BENICIA STREET, FREMONT, CA 94538, USA TEL: (510) 771-1000 FAX: (510) 661-0888

This report shall not be reproduced except in full, without the written approval of UL Verification Services Inc.

Compliance Certification Services
Above 1GHz High Frequency Substitution Measurement

Company: LG
Project #: 14U17461
Date: 05/22/14
Test Engineer: O. Stoelting
Configuration: EUT Z position, AC Charger, Headphones
Mode: TX, LTE band 4, 10MHz BW, QPSK

Chamber	Pre-amplifer	Filter	Limit
5m Chamber A	T145 8449B	Filter 1	

Band: LTE4 10MHz QPSK

f GHz	SG reading (dBm)	Ant. Pol. (H/V)	Distance (m)	Preamp (dB)	Filter (dB)	ERP (dBm)	Limit (dBm)	Delta (dB)	Notes
Low Ch, (1715 MHz)									
3.430	-24.8	V	3.0	30.4	1.0	-54.2	-13.0	-41.2	
5.145	-33.0	V	3.0	28.8	1.0	-60.7	-13.0	-47.7	
6.860	-37.4	V	3.0	27.1	1.0	-63.5	-13.0	-50.5	
3.430	-34.4	H	3.0	30.4	1.0	-63.9	-13.0	-50.9	
5.145	-35.5	H	3.0	28.8	1.0	-63.3	-13.0	-50.3	
6.860	-36.1	H	3.0	27.1	1.0	-62.3	-13.0	-49.3	
Mid Ch, (1732.5 MHz)									
3.465	-33.8	V	3.0	30.4	1.0	-63.2	-13.0	-50.2	
5.198	-37.5	V	3.0	28.7	1.0	-65.2	-13.0	-52.2	
6.930	-36.8	V	3.0	27.1	1.0	-62.8	-13.0	-49.8	
3.465	-27.1	H	3.0	30.4	1.0	-56.5	-13.0	-43.5	
5.198	-35.3	H	3.0	28.7	1.0	-63.0	-13.0	-50.0	
6.930	-35.8	H	3.0	27.1	1.0	-61.9	-13.0	-48.9	
High Ch, (1750 MHz)									
3.500	-35.9	V	3.0	30.4	1.0	-65.3	-13.0	-52.3	
5.250	-35.6	V	3.0	28.7	1.0	-63.3	-13.0	-50.3	
7.000	-37.3	V	3.0	27.0	1.0	-63.3	-13.0	-50.3	
3.500	-34.9	H	3.0	30.4	1.0	-64.3	-13.0	-51.3	
5.250	-36.9	H	3.0	28.7	1.0	-64.6	-13.0	-51.6	
7.000	-36.2	H	3.0	27.0	1.0	-62.2	-13.0	-49.2	

Rev. 03.03.09

UL VERIFICATION SERVICES INC. FORM NO: CCSUP4701I
47173 BENICIA STREET, FREMONT, CA 94538, USA TEL: (510) 771-1000 FAX: (510) 661-0888

This report shall not be reproduced except in full, without the written approval of UL Verification Services Inc.

Compliance Certification Services
Above 1GHz High Frequency Substitution Measurement

Company: LG
Project #: 14U17461
Date: 05/22/14
Test Engineer: O. Stoelting
Configuration: EUT Z position, AC Charger, Headphones
Mode: TX, LTE band 4, 5MHz BW, 16 QAM

Chamber	Pre-amplifer	Filter	Limit
5m Chamber B	T145 8449B	Filter 1	

Band: LTE4, 5MHz, 16QAM

f GHz	SG reading (dBm)	Ant. Pol. (H/V)	Distance (m)	Preamp (dB)	Filter (dB)	ERP (dBm)	Limit (dBm)	Delta (dB)	Notes
Low Ch, (1712.5 MHz)									
3.425	-20.0	V	3.0	30.4	1.0	-49.5	-13.0	-36.5	
5.138	-24.3	V	3.0	28.8	1.0	-52.0	-13.0	-39.0	
6.850	-21.9	V	3.0	27.1	1.0	-48.0	-13.0	-35.0	
3.425	-24.4	H	3.0	30.4	1.0	-53.9	-13.0	-40.9	
5.138	-23.0	H	3.0	28.8	1.0	-50.7	-13.0	-37.7	
6.850	-21.6	H	3.0	27.1	1.0	-47.7	-13.0	-34.7	
Mid Ch, (1732.5 MHz)									
3.465	-20.0	V	3.0	30.4	1.0	-49.4	-13.0	-36.4	
5.198	-21.6	V	3.0	28.7	1.0	-49.3	-13.0	-36.3	
6.930	-23.0	V	3.0	27.1	1.0	-49.1	-13.0	-36.1	
3.465	-14.4	H	3.0	30.4	1.0	-43.8	-13.0	-30.8	
5.198	-23.1	H	3.0	28.7	1.0	-50.8	-13.0	-37.8	
6.930	-21.3	H	3.0	27.1	1.0	-47.4	-13.0	-34.4	
High Ch, (1752.5 MHz)									
3.505	-18.9	V	3.0	30.4	1.0	-48.3	-13.0	-35.3	
5.258	-22.7	V	3.0	28.6	1.0	-50.3	-13.0	-37.3	
7.010	-21.8	V	3.0	27.0	1.0	-47.8	-13.0	-34.8	
3.505	-25.4	H	3.0	30.4	1.0	-54.8	-13.0	-41.8	
5.258	-23.8	H	3.0	28.6	1.0	-51.4	-13.0	-38.4	
7.010	-20.6	H	3.0	27.0	1.0	-46.6	-13.0	-33.6	

Rev. 03.03.09

UL VERIFICATION SERVICES INC. FORM NO: CCSUP4701I
47173 BENICIA STREET, FREMONT, CA 94538, USA TEL: (510) 771-1000 FAX: (510) 661-0888

This report shall not be reproduced except in full, without the written approval of UL Verification Services Inc.

Compliance Certification Services
Above 1GHz High Frequency Substitution Measurement

Company: LG
Project #: 14U17461
Date: 05/22/14
Test Engineer: O. Stoelting
Configuration: EUT Z position, AC Charger, Headphones
Mode: TX, LTE band 4, 5MHz BW, QPSK

Chamber	Pre-amplifer	Filter	Limit
5m Chamber B	T145 8449B	Filter 1	

Band: LTE4 5MHz QPSK

f GHz	SG reading (dBm)	Ant. Pol. (H/V)	Distance (m)	Preamp (dB)	Filter (dB)	ERP (dBm)	Limit (dBm)	Delta (dB)	Notes
Low Ch, (1712.5 MHz)									
3.425	-20.3	V	3.0	30.4	1.0	-49.7	-13.0	-36.7	
5.138	-23.7	V	3.0	28.8	1.0	-51.4	-13.0	-38.4	
6.850	-21.6	V	3.0	27.1	1.0	-47.8	-13.0	-34.8	
3.425	-23.5	H	3.0	30.4	1.0	-53.0	-13.0	-40.0	
5.138	-22.8	H	3.0	28.8	1.0	-50.6	-13.0	-37.6	
6.850	-21.5	H	3.0	27.1	1.0	-47.7	-13.0	-34.7	
Mid Ch, (1732.5 MHz)									
3.465	-19.9	V	3.0	30.4	1.0	-49.3	-13.0	-36.3	
5.198	-23.5	V	3.0	28.7	1.0	-51.2	-13.0	-38.2	
6.930	-22.8	V	3.0	27.1	1.0	-48.9	-13.0	-35.9	
3.465	-14.5	H	3.0	30.4	1.0	-43.9	-13.0	-30.9	
5.198	-23.0	H	3.0	28.7	1.0	-50.7	-13.0	-37.7	
6.930	-21.4	H	3.0	27.1	1.0	-47.4	-13.0	-34.4	
High Ch, (1752.5 MHz)									
3.505	-18.2	V	3.0	30.4	1.0	-47.6	-13.0	-34.6	
5.258	-22.9	V	3.0	28.6	1.0	-50.6	-13.0	-37.6	
7.010	-21.3	V	3.0	27.0	1.0	-47.3	-13.0	-34.3	
3.505	-25.4	H	3.0	30.4	1.0	-54.7	-13.0	-41.7	
5.258	-23.9	H	3.0	28.6	1.0	-51.5	-13.0	-38.5	
7.010	-20.8	H	3.0	27.0	1.0	-46.8	-13.0	-33.8	

Rev. 03.03.09

UL VERIFICATION SERVICES INC. FORM NO: CCSUP4701I
47173 BENICIA STREET, FREMONT, CA 94538, USA TEL: (510) 771-1000 FAX: (510) 661-0888

This report shall not be reproduced except in full, without the written approval of UL Verification Services Inc.

Band

BC1

Compliance Certification Services
Above 1GHz High Frequency Substitution Measurement

Company: LG
Project #: 14U17461
Date: 05/23/14
Test Engineer: D. Soper
Configuration: EUT, X Position
Mode: CDMA EVDO BC1

Chamber	Pre-amplifer	Filter	Limit
3m Chamber	T343 8449B	Filter 1	Part 24

f GHz	SG reading (dBm)	Ant. Pol. (H/V)	Distance (m)	Preamp (dB)	Filter (dB)	EIRP (dBm)	Limit (dBm)	Delta (dB)	Notes
Low Ch, 1851.25MHz									
3.703	-18.0	V	3.0	35.4	1.0	-52.4	-13.0	-39.4	
5.554	-18.0	V	3.0	34.7	1.0	-51.8	-13.0	-38.8	
7.405	-16.6	V	3.0	34.9	1.0	-50.5	-13.0	-37.5	
3.703	-16.4	H	3.0	35.4	1.0	-50.8	-13.0	-37.8	
5.554	-17.3	H	3.0	34.7	1.0	-51.1	-13.0	-38.1	
7.405	-15.7	H	3.0	34.9	1.0	-49.6	-13.0	-36.6	
Mid Ch, 1880.0MHz									
3.760	-17.1	V	3.0	35.3	1.0	-51.4	-13.0	-38.4	
5.640	-17.9	V	3.0	34.7	1.0	-51.6	-13.0	-38.6	
7.520	-16.1	V	3.0	34.9	1.0	-50.1	-13.0	-37.1	
3.760	-13.3	H	3.0	35.3	1.0	-47.6	-13.0	-34.6	
5.640	-17.6	H	3.0	34.7	1.0	-51.3	-13.0	-38.3	
7.520	-15.2	H	3.0	34.9	1.0	-49.1	-13.0	-36.1	
High Ch, 1908.75 MHz									
3.818	-16.2	V	3.0	35.3	1.0	-50.5	-13.0	-37.5	
5.726	-17.9	V	3.0	34.7	1.0	-51.7	-13.0	-38.7	
7.635	-15.6	V	3.0	34.9	1.0	-49.6	-13.0	-36.6	
3.818	-16.4	H	3.0	35.3	1.0	-50.6	-13.0	-37.6	
5.726	-17.3	H	3.0	34.7	1.0	-51.0	-13.0	-38.0	
7.635	-14.5	H	3.0	34.9	1.0	-48.4	-13.0	-35.4	

Rev. 03.03.09
Note: No other emissions were detected above the system noise floor.

UL VERIFICATION SERVICES INC. FORM NO: CCSUP4701I
47173 BENICIA STREET, FREMONT, CA 94538, USA TEL: (510) 771-1000 FAX: (510) 661-0888

This report shall not be reproduced except in full, without the written approval of UL Verification Services Inc.

Compliance Certification Services
Above 1GHz High Frequency Substitution Measurement

Company: LG
Project #: 14U17461
Date: 05/23/14
Test Engineer: D. Soper
Configuration: EUT, X Position
Mode: CDMA RTT BC1

Chamber	Pre-amplifer	Filter	Limit
5m Chamber A	T343 8449B	Filter 1	Part 24

Band

BC1

1xRTT

f GHz	SG reading (dBm)	Ant. Pol. (H/V)	Distance (m)	Preamp (dB)	Filter (dB)	EIRP (dBm)	Limit (dBm)	Delta (dB)	Notes
Low Ch, 1851.25MHz									
3.703	-16.0	V	3.0	35.4	1.0	-50.4	-13.0	-37.4	
5.554	-19.0	V	3.0	34.7	1.0	-52.7	-13.0	-39.7	
7.405	-18.1	V	3.0	34.9	1.0	-52.0	-13.0	-39.0	
3.703	-20.6	H	3.0	35.4	1.0	-55.0	-13.0	-42.0	
5.554	-18.4	H	3.0	34.7	1.0	-52.1	-13.0	-39.1	
7.405	-17.0	H	3.0	34.9	1.0	-50.9	-13.0	-37.9	
Mid Ch, 1880.0MHz									
3.760	-17.8	V	3.0	35.3	1.0	-52.2	-13.0	-39.2	
5.640	-18.8	V	3.0	34.7	1.0	-52.6	-13.0	-39.6	
7.520	-17.8	V	3.0	34.9	1.0	-51.7	-13.0	-38.7	
3.760	-20.0	H	3.0	35.3	1.0	-54.3	-13.0	-41.3	
5.640	-18.5	H	3.0	34.7	1.0	-52.2	-13.0	-39.2	
7.520	-16.8	H	3.0	34.9	1.0	-50.7	-13.0	-37.7	
High Ch, 1908.75 MHz									
3.818	-15.3	V	3.0	35.3	1.0	-49.6	-13.0	-36.6	
5.726	-18.6	V	3.0	34.7	1.0	-52.4	-13.0	-39.4	
7.635	-17.7	V	3.0	34.9	1.0	-51.6	-13.0	-38.6	
3.818	-18.9	H	3.0	35.3	1.0	-53.2	-13.0	-40.2	
5.726	-18.5	H	3.0	34.7	1.0	-52.2	-13.0	-39.2	
7.635	-16.2	H	3.0	34.9	1.0	-50.2	-13.0	-37.2	

Rev. 03.03.09
Note: No other emissions were detected above the system noise floor.

UL VERIFICATION SERVICES INC. FORM NO: CCSUP4701I
47173 BENICIA STREET, FREMONT, CA 94538, USA TEL: (510) 771-1000 FAX: (510) 661-0888

This report shall not be reproduced except in full, without the written approval of UL Verification Services Inc.

Band

BC0

Compliance Certification Services
Above 1GHz High Frequency Substitution Measurement

Company: LG
Project #: 14U17461
Date: 05/23/14
Test Engineer: D. Soper
Configuration: EUT, X Position
Mode: CDMA EVDO BC0

Chamber	Pre-amplifer	Filter	Limit
5m Chamber A	T343 8449B	Filter 1	Part 22

f GHz	SG reading (dBm)	Ant. Pol. (H/V)	Distance (m)	Preamp (dB)	Filter (dB)	EIRP (dBm)	Limit (dBm)	Delta (dB)	Notes
Low Ch, 824.7MHz									
1.650	-29.5	V	3.0	37.4	1.0	-65.9	-13.0	-52.9	
2.474	-22.9	V	3.0	36.4	1.0	-58.3	-13.0	-45.3	
3.298	-20.6	V	3.0	35.8	1.0	-55.4	-13.0	-42.4	
1.650	-29.8	H	3.0	37.4	1.0	-66.2	-13.0	-53.2	
2.474	-24.6	H	3.0	36.4	1.0	-60.0	-13.0	-47.0	
3.298	-20.6	H	3.0	35.8	1.0	-55.3	-13.0	-42.3	
Mid Ch, 836.52MHz									
1.673	-29.2	V	3.0	37.3	1.0	-65.6	-13.0	-52.6	
2.509	-22.7	V	3.0	36.4	1.0	-58.1	-13.0	-45.1	
3.346	-20.2	V	3.0	35.8	1.0	-55.0	-13.0	-42.0	
1.673	-29.4	H	3.0	37.3	1.0	-65.8	-13.0	-52.8	
2.509	-24.3	H	3.0	36.4	1.0	-59.6	-13.0	-46.6	
3.346	-20.1	H	3.0	35.8	1.0	-54.8	-13.0	-41.8	
High Ch, 848.31 MHz									
1.696	-29.1	V	3.0	37.3	1.0	-65.4	-13.0	-52.4	
2.544	-22.6	V	3.0	36.3	1.0	-57.9	-13.0	-44.9	
3.393	-20.1	V	3.0	35.7	1.0	-54.8	-13.0	-41.8	
1.696	-29.5	H	3.0	37.3	1.0	-65.8	-13.0	-52.8	
2.544	-24.3	H	3.0	36.3	1.0	-59.6	-13.0	-46.6	
3.393	-19.7	H	3.0	35.7	1.0	-54.4	-13.0	-41.4	

Rev. 03.03.09
Note: No other emissions were detected above the system noise floor.

UL VERIFICATION SERVICES INC. FORM NO: CCSUP4701I
47173 BENICIA STREET, FREMONT, CA 94538, USA TEL: (510) 771-1000 FAX: (510) 661-0888

This report shall not be reproduced except in full, without the written approval of UL Verification Services Inc.

Compliance Certification Services
Above 1GHz High Frequency Substitution Measurement

Company: LG
Project #: 14U17461
Date: 05/23/14
Test Engineer: D. Soper
Configuration: EUT, X Position
Mode: CDMA RTT BC0

Chamber	Pre-amplifer	Filter	Limit
5m Chamber A	T343 8449B	Filter 1	Part 22

Band	f GHz	SG reading (dBm)	Ant. Pol. (H/V)	Distance (m)	Preamp (dB)	Filter (dB)	EIRP (dBm)	Limit (dBm)	Delta (dB)	Notes
	Low Ch, 824.7MHz									
BC0	1.649	-27.8	V	3.0	37.4	1.0	-64.2	-13.0	-51.2	
	2.474	-21.2	V	3.0	36.4	1.0	-56.6	-13.0	-43.6	
	3.298	-18.0	V	3.0	35.8	1.0	-52.8	-13.0	-39.8	
1xRTT	1.649	-24.4	H	3.0	37.4	1.0	-60.8	-13.0	-47.8	
	2.474	-18.8	H	3.0	36.4	1.0	-54.2	-13.0	-41.2	
	3.298	-15.0	H	3.0	35.8	1.0	-49.7	-13.0	-36.7	
	Mid Ch, 836.52MHz									
	1.673	-23.8	V	3.0	37.3	1.0	-60.1	-13.0	-47.1	
	2.509	-17.3	V	3.0	36.4	1.0	-52.6	-13.0	-39.6	
	3.346	-12.8	V	3.0	35.8	1.0	-47.6	-13.0	-34.6	
	1.673	-25.2	H	3.0	37.3	1.0	-61.5	-13.0	-48.5	
	2.509	-19.0	H	3.0	36.4	1.0	-54.4	-13.0	-41.4	
	3.346	-13.4	H	3.0	35.8	1.0	-48.2	-13.0	-35.2	
	High Ch, 848.31 MHz									
	1.696	-23.1	V	3.0	37.3	1.0	-59.4	-13.0	-46.4	
	2.544	-17.2	V	3.0	36.3	1.0	-52.6	-13.0	-39.6	
	3.393	-14.6	V	3.0	35.7	1.0	-49.3	-13.0	-36.3	
	1.696	-24.1	H	3.0	37.3	1.0	-60.4	-13.0	-47.4	
	2.544	-18.5	H	3.0	36.3	1.0	-53.8	-13.0	-40.8	
	3.393	-13.8	H	3.0	35.7	1.0	-48.5	-13.0	-35.5	

Rev. 03.03.09
Note: No other emissions were detected above the system noise floor.

UL VERIFICATION SERVICES INC. FORM NO: CCSUP4701I
47173 BENICIA STREET, FREMONT, CA 94538, USA TEL: (510) 771-1000 FAX: (510) 661-0888

This report shall not be reproduced except in full, without the written approval of UL Verification Services Inc.