LG
Life's Good

ENGLISH

USER GUIDE

LG-X180g

MFL00000000 (1.0)

www.lg.com

Welcome!

Thank you for choosing LG. Please carefully read this user guide before using the device for the first time to ensure safe and proper use.

- Always use genuine LG accessories. The supplied items are designed only for this device and may not be compatible with other devices.
- This device is not suitable for people who have a visual impairment due to the touchscreen keyboard.
- Descriptions are based on the device's default settings.
- Default apps on the device are subject to updates and support for these apps may be withdrawn without prior notice. If you have any questions about an app provided with the device, please contact a LG Service Centre. For userinstalled apps, please contact the relevant service provider.
- Modifying the device's operating system or installing software from unofficial sources may damage the device and lead to data corruption or data loss. Such actions will violate your LG licence agreement and void your warranty.
- Some contents and illustrations may differ from your device depending on the region, service provider, software version, or OS version, and are subject to change without prior notice.

Instructional notices

⚠ **WARNING!**	situations that could cause injury to yourself or others
Caution!	situations that could cause damage to the device or other equipment
NOTE	notice or additional information
TIP!	tips for when using the function

Table of contents

Guidelines for safe and efficient use 4

Safety instructions 11

Important notice 19

Getting to know your phone 22

Phone layout..... 22
Installing the SIM or USIM card and battery..... 24
Charging the battery 26
Inserting a memory card..... 27
Removing the memory card..... 28
Locking and unlocking the device 28

Your Home screen 30

Touch screen tips 30
Home screen 31
Customizing the Home screen 32
Returning to recently-used applications..... 33
Notifications panel 33
On-screen keyboard 36

Special Features 37

Gesture shot..... 37
KnockON 38
Knock Code 38

Google account setup 40

Creating your Google account 40
Signing into your Google account..... 40

Connecting to Networks and Devices..... 42

Wi-Fi 42
Bluetooth..... 43
Wi-Fi Direct 44
Transferring data between a PC and the device..... 45

Calls 46

Making a call 46
Calling your contacts 46
Answering and rejecting a call 46
Making a second call 47
Viewing your recents call logs..... 47
Call settings..... 47

Contacts 48

Searching for a contact..... 48
Adding a new contact 48
Favourites contacts..... 48
Creating a group..... 49

Messaging..... 50

Sending a message 50
Conversation view 51
Changing your messaging settings 51

E-mail 52
Managing email accounts 52
Composing and sending email 53

Camera and Video 54
Camera options on the viewfinder 54
Recording a video 55
Gallery 56

Utilities 59
Clock 59
Calculator 60
Calendar 60
Sound Recorder 61
Voice Search 61
Downloads 61
FM Radio 62

Web Browser 63
Internet 63
Chrome 64

Settings 65
Wireless & networks 65
Device 66
Personal 67
System 69

Phone software update 71
Phone software update 71

About this user guide 73
About this user guide 73
Instructional notices 74
Trademarks 74

Accessories 75

Troubleshooting 76

FAQ 80

Guidelines for safe and efficient use

Important Information

This user's guide contains important information about the use and operation of this phone. Read all information carefully for optimal performance and to avoid any damage or misuse of the phone. Any changes or modifications not expressly approved in this user's guide could void your warranty for this equipment.

Before you begin

Safety Guidelines

⚠ **WARNING!** To reduce the possibility of electric shock, do not expose your product to high humidity areas, such as bathroom or swimming pool.

Keep the phone away from heat. Never store your phone in environment that may expose it to temperatures below 0 °C or above 40 °C, such as outdoor during snowstorm, or in your car in hot days. Exposure to cold or heat will result in malfunction, damage or permanent failure. Be careful when using your phone near other electronic devices. The RF emissions from mobile phones may affect nearby electronic equipment that not adequately shielded. You should consult manufacturers of any personal medical devices, as in the case of pacemakers and hearing aides, to determine whether they are susceptible to interference from cell phones.
Turn off your phone in medical facilities or at gas stations. Never place your phone in microwaves, as it will cause the battery to explode.

Important! Before using your phone, please read the SAFETY INFORMATION OF THE TELECOMMUNICATIONS INDUSTRY ASSOCIATION (TIA).

Safety Information

Read these simple guidelines. Breaking the rules may be illegal or dangerous.
More detailed information is provided in this user's guide.

- Never use an unapproved battery that could cause damages to the phone or the battery itself, or even explode.
- Never place your phone in a microwave oven, as this will result in an explosion of the battery.
- Do not dispose of your battery in fire or with hazardous or flammable materials.
- Make sure the battery does not come into contact with sharp-edged items, such as animal teeth or claws. This could cause a fire.
- Store the battery in a place out of the reach of children.
- Be careful so that children do not swallow any parts of the phone, such as rubber plugs (earpiece, parts that connect to the phone, etc.). This could cause asphyxiation or suffocation.
- Disconnect the plug and charger from the outlet when the phone shows that the battery has been fully charged, because it may cause electric shock or fire hazard.
- When in the car, do not leave your phone, or install a hands-free kit, near the airbag. If wireless equipment is improperly installed, you can be seriously injured if the airbag is deployed.
- Do not use mobile phone while driving.
- Do not use the phone in areas where its usage is prohibited. (For example: in airplanes).
- Do not expose the battery charger or adapter to direct sunlight, or use it in places with high humidity, such as bathroom.
- Never store your phone in temperatures lower than -20°C or higher than 50°C.
- Do not use harsh chemicals (such as alcohol, benzene, solvents, etc.) or detergents to clean the phone. This could cause fire.
- Do not drop the phone, strike it, or shake it hard.
  Such actions may harm the phone's internal circuit boards.

- Do not use your phone in high explosive areas, as this may generate sparks.
- Do not damage the power cord by bending, twisting, pulling, or heating it. Do not use the plug if it is loose as it may cause fire or electric shock.
- Do not handle the phone with wet hands while it is charging. This can cause electric shock or seriously damage your phone.
- Do not disassemble the phone.
- Do not make or answer calls while charging the phone, which can cause a short circuit, electric shock, or fire.
- Use only batteries and chargers provided by LG. The warranty does not apply to products provided by other providers.
- Only authorized personnel should service the phone and its accessories. Installation or service may result in accidents and consequently invalidate the warranty.
- Do not hold or let the antenna come in contact with your body during a call.
- Emergency calls can be made only within a service area. To make an emergency call, make sure you are within a service area and the phone is on.
- Use your accessories, such as headphones or headsets, with caution, ensuring that the cables are plugged properly and that they do not touch the antenna unnecessarily.

Information about the RF exposure from FCC

⚠ **WARNING!** Read this information before operating the phone.

In August 1996, the Federal Communications Commission (FCC) of the United States, with its action in Report and Order FCC 96-326, adopted an updated safety standard for human exposure to radio frequency (RF) electromagnetic energy emitted by FCC regulated transmitters. Those guidelines are consistent with the safety standard previously set by both international and U.S. standards.

The design of this phone complies with FCC guidelines and these international standards.

Caution

Use only the supplied antenna. Use of unauthorized antennas, or modifications, could impair call quality, damage the phone, void your warranty, or result in a violation of FCC regulations.

Do not use the phone with a damaged antenna.

A damaged antenna in contact with the skin could cause a singe. Contact your local dealer for an antenna replacement.

Body effects

This device was tested for typical body operation, keeping a distance of 1 cm (0.39 inch) between the user's body and the back of the phone. To comply with RF exposure requirements of the FCC standards, a minimum distance of 1 cm (0.39 inch) between the user's body and the back of the phone is required.

Belt-clips, holsters, and similar accessories containing metallic components from others manufacturers should not be used.

Accessories worn close to the body, without keeping a minimum distance of 1 cm (0.39 inch) between the user's body and the back of the phone, and that have not been tested for typical body operation, may not comply with FCC's RF exposure limits and should be avoided.

External antenna mounted on the vehicle (optional, if available)

It must keep a minimum distance of 20 cm (8 inches) between the user / bystander and the vehicle mounted external antenna, in order to satisfy FCC's RF exposure requirements.

For more information about RF exposure, visit the FCC Website at www.fcc.gov

Class B Compliance under article 15 of the FCC

This device and its accessories comply with Article 15 of the FCC rules.
The operation is subject to the following conditions
(1) This device, and its accessories, will not cause harmful interference and (2) this device and its accessories must accept any interference received, including interference that could cause an undesired operation.

Battery Precautions

- Do not disassemble.
- Do not short-circuit.
- Do not expose to high temperatures, over 60 °C (140 °F).
- Do not incinerate.

Battery Disposal

- Please dispose of your battery properly, or bring it to your wireless provider for recycling.
- Do not dispose of your battery in fire or with hazardous or flammable materials.

Adapter Precautions (Charger)

- Using the wrong battery charger could damage your phone and void your warranty.
- The adapter or battery charger is only designed for indoor use.
- Do not expose the battery charger or adapter to direct sunlight, or use it in places with high humidity, such as the bathroom.

Cautions for Battery

- Do not disassemble or open crush, bend or deform, puncture or shred.
- Do not modify or remanufacture, attempt to insert foreign objects into the battery, immerse or expose to water or other liquids, expose to fire, explosion or other hazard.
- Only use the battery for the system for which it is specified.
- Only use the battery with a charging system that has been qualified with the system per this standard. Use of an unqualified battery or charger may present a risk of fire, explosion, leakage, or other hazard.
- Do not short circuit a battery or allow metallic conductive objects to contact battery terminals.
- Replace the battery only with another battery that has been qualified with the system per this standard, IEEE-Std-1725-200x. Use of an unqualified battery may present a risk of fire, explosion, leakage or other hazard.
- Promptly dispose of used batteries in accordance with local regulations.
- Battery usage by children should be supervised.
- Avoid dropping the phone or battery. If the phone or battery is dropped, especially on a hard surface, and the user suspects damage, take it to a service center for inspection.
- Improper battery use may result in a fire, explosion or other hazard.
- For those host devices that utilize a USB port as a charging source, the host device's user manual shall include a statement that the phone shall only be connected to products that bear the USB-IF logo or have completed the USB-IF compliance program.
- Always unplug the charger from the wall socket after the phone is fully charged to save unnecessary power consumption of the charger.

Avoid damage to your ear

- Damage to your hear can occur due to constant exposure to excessive high sound. We, therefore, recommend that you do not turn on or off the phone near your ear. We also recommend you be reasonable with the music and volume level.
- If you listen to music, please ensure that the volume level is adequate, so that you are aware of your surroundings. This is particularly important when attempting to cross a street.

Safety instructions

TIA's Safety Information

This includes complete security information on wireless phones from TIA (Telecommunications Industry Association).

It's required, for CTIA Certification, the inclusion in the user manual of text covering pacemakers, hearing aids and other medical devices. It's encouraged the use of the remaining TIA language when relevant.

Exposure to Radio Frequency Signal

Your wireless handheld portable telephone is a lowpower radio transmitter and receiver. When it is ON, it receives and also sends out radio frequency (RF) signals.

In August, 1996, the Federal Communications Commissions (FCC) adopted RF exposure guidelines with safety levels for handheld wireless phones. Those guidelines are consistent with the safety standards previously set by both U.S. and international standards bodies

ANSI C95.1 (1992) *

NCRP Report 86 (1986)

ICNIRP (1996)

Those standards were based on comprehensive and periodic evaluations of the relevant scientific literature. For example, over 120 scientists, engineers, and physicians from universities, government health agencies, and industry reviewed the available body of research to develop

the ANSI Standard (C95.1).

* American National Standards Institute; National Council on Radiation Protection and Measurements; International Commission on Non-Ionizing Radiation Protection.

The design of your phone complies with the FCC guidelines (and those standards).

Antenna Care

Use only the supplied or an approved replacement antenna. Unauthorized antennas, modifications, or attachments could damage the phone and may violate FCC regulations.

Phone Operation

NORMAL POSITION: Hold the phone as you would any other telephone with the antenna pointed up and over your shoulder.

Suggestions for a more efficient operation

For your phone to operate most efficiently

- Do not touch the antenna unnecessarily, when the phone is in use. The contact with the antenna affects call quality, and may cause the phone to operate at a higher power level than otherwise would be need.

Driving

Check the laws and regulations related to the use of wireless phones in the areas where you drive. Always obey these regulations. Also, if using your phone while driving, make sure to

- Pay full attention to driving; driving safely is your first responsibility;
- Use hands-free operation, if available;
- Pull off the road and park, before making or answering a call, if driving conditions demand so.

Electronic Devices

Most modern electronic equipment is shielded from RF signals.
However, certain electronic equipment may not be shielded against the RF signals from your wireless phone.

Pacemaker

The Medical Industry Manufacturers Association recommends a minimum distance of fifteen (15) centimeters, or six (6) inches, between a handheld wireless phone and a pacemaker, in order to avoid potential interference between them.
These advices are consistent with independent researches, and with recommendations based on wireless technology research.
People with pacemakers should:

- ALWAYS keep the phone at least fifteen centimeters (six inches) from their pacemaker, whenever the phone is turned on;
- Not carry the phone in a shirt pocket;
- Use the ear opposite to the pacemaker, to minimize the potential interference;
- If you have any reason to suspect that interference is taking place, switch off your phone immediately.

Hearing Aids

Some digital wireless phones may interfere with some hearing aids. In the event of such interference, we recommend that you contact your service provider.

Other Medical Devices

If you use any other personal medical devices, consult your device manufacturer to determine if they are adequately shielded from external RF energy. Your doctor can help you obtain this information.

Health Care Facilities

Turn off your phone in health care facilities, whenever there are signs asking you to do so. Hospitals or health care facilities may use equipment that could be sensitive to external RF energy.

Vehicles

RF signals may affect improperly installed or inadequately shielded devices in motor vehicles.
Check with the manufacturer, or its representative, regarding your vehicle.
You should also consult the manufacturer about any equipment that has been added to your vehicle.

Facilities with signs

Turn off the phone in any facility where warning signs request you to do so.

Airplanes

FCC regulations prohibit the use of phones while in the air. Turn off your phone before boarding an airplane.

Blasting Areas

To avoid interfering with blasting operations, turn your phone off when in a 'blasting area' or in areas with signs that read: 'Turn off two-way radios' . Obey all signs and instructions.

Potentially Explosive Atmosphere

Turn off the phone when in an area with a potentially explosive atmosphere, and obey all signs and instructions.

Sparks in such areas could cause an explosion or fire that could result in personal injury or death.

Areas with a potentially explosive atmosphere are often clearly marked, but not always. Among the potentially dangerous areas are:

Fueling areas (such as gas stations), areas below deck on boats, facilities where chemical products are transferred or stored, vehicles using liquefied petroleum gas (as propane or butane), areas where the air contains chemicals or particles (such as grain, dust or metal powders), and any other areas where you would normally be advised to turn off your vehicle engine.

For vehicles equipped with air bags

Air bags inflate with strong force. Do not place objects in the area over the air bag or in its deployment area, including wireless equipment, either installed or portable.

Serious injuries could occur if wireless equipment is improperly installed into the car when the air bag inflates.

Safety Information

Read and observe the following information for the safe and proper use of your phone, and to prevent any damage.

Also, keep the user's guide in an accessible place at all times after reading it.

Charger, Adapter and Battery Security

- The charger and adapter are designed only for indoor use.
- Dispose of your battery properly, or bring it to your wireless provider for recycling.
- The battery doesn't need to be fully discharged before recharging.
- Only use LG approved chargers that are specifically made for your phone model, since they are designed to maximize the battery life.
- Do not disassemble or short-circuit it.
- Keep the metal contacts on the battery clean.
- Replace the battery when it no longer provides acceptable performance. The battery can be recharged several hundred times before replacement.
- Charge the battery after long periods without use to maximize its life.
- The battery life will vary depending on usage patterns and environmental conditions.
- Intensive use of backlighting, browser, and packet data connectivity affect battery life and talk/standby times.
- The role of self-protection interrupts the phone when its operation is in an abnormal state. In this case, remove the battery from the phone, reinstall it, and turn on the phone.

Explosion, Shock and Fire Danger

- Do not place the phone in a place exposed to excessive dust, and keep the minimum required distance between the power cord and heat sources.
- Unplug the power cord before cleaning the phone, and clean the power plug whenever it is dirty.
- When using the power plug, make sure it is firmly connected. Otherwise, it can overheat or start a fire.
- Placing the phone in a pocket or bag without covering the receptacle (power plug pin), metallic articles (such as a coin, clip or pen) may short-circuit the phone. Always cover the receptacle when not in use.

- Do not short-circuit the battery. Metal items, such as coins, paper clips, or pens, in your pocket or bag may cause a shortcircuit between the + and - terminals of the battery (metal strips on the battery). The short-circuit of the terminals may damage the battery and cause an explosion.

General Notice

- Using a damaged battery, or inserting it into the mouth can cause serious injuries.
- Do not place the phone in proximity to items containing magnetic components, such as credit cards, calling cards, bank books, or subway tickets. The phone magnetism may damage the data stored in the magnetic strip.
- Talking on the phone for a long period of time may reduce call quality, because of the heat generated during use.
- When the phone has not been in use for a long time, store it in a safe place, with the power cord unplugged.
- Using the phone close to a receiving equipment (such as TV or radio) may cause interference.
- Do not use the phone if the antenna is damaged. If a damaged antenna contacts skin, it may cause a slight singe. Contact an LG Authorized Service Facility to replace the damaged antenna.
- Do not immerse your phone in water. If this happens, immediately turn it off and remove the battery. If your phone does not work, take it to an LG Authorized Service Facility.
- The power supply contains elements that could be harmful to your health, if components are handled directly. If this happens, we recommend immediate hand-washing.
- Do not paint the phone.
- Data stored in your phone might be deleted due to careless use, hardware repair or software upgrade. Please backup your important phone numbers (ringtones, text or voice messages, images, and videos might also get deleted). The manufacturer is not liable for damages due to loss of data.

- When using the phone in public places, you may set the ringer on vibrate to avoid disturbing others.
- Do not switch the phone on/off while it is in your ear.
- Repairs under warranty, at LG's discretion, may include replacement parts or boards that are either new or reconditioned, provided that they have functionality equal to that of the parts being replaced.

Ambient temperatures

Use your phone in temperatures between 0 ºC and 40 ºC, if possible. Exposing your phone to extremely low or high temperatures may result in damage, malfunction, or even explosion.

Open Source Software Notice Information

To obtain the source code under GPL, LGPL, MPL, and other open source licenses, that is contained in this product, please visit http://opensource.lge.com.

In addition to the source code, all referred license terms, warranty disclaimers and copyright notices are available for download.

LG Electronics will also provide open source code to you on CD-ROM for a charge covering the cost of performing such distribution (such as the cost of media, shipping, and handling) upon email request to opensource@lge.com. This offer is valid for three (3) years from the date on which you purchased the product.

HOW TO UPDATE YOUR DEVICE

Access to latest firmware releases, new software functions and improvements.

- **Select the software update in settings menu on your device.**
- **Update your device by connecting it to your PC.** For more information about using this function, please visit http://www.lg.com/common/index.jsp select country and language.

Important notice

Please read this before you start using your phone!

Please check to see whether any problems you encountered with your phone are described in this section before taking the phone in for service or calling a service representative.

1. Phone memory

When there is less than 10MB of space available in your phone memory, your phone cannot receive new messages. You may need to check your phone memory and delete some data, such as applications or messages, to make more memory available.

To uninstall applications:

1 Tap ○ > ⊞ > ⚙ > **Apps**.
2 Once all applications appear, scroll to and select the application you want to uninstall.
3 Tap **Uninstall**.

2. Optimizing battery life

Extend your battery's power by turning off features that you do not need to run constantly in the background. You can monitor how applications and system resources consume battery power.

Extending your phone's battery life:

- Turn off radio communications when you are not using. If you are not using Wi-Fi, Bluetooth or GPS, turn them off.
- Reduce screen brightness and set a shorter screen timeout.
- Turn off automatic syncing for Gmail, Calendar, Contacts and other applications.

- Some applications you download may consume battery power.
- While using downloaded applications, check the battery charge level.

3. Before installing an open source application and OS

⚠ **WARNING**

- If you install and use an OS other than the one provided by the manufacturer it may cause your phone to malfunction. In addition, your phone will no longer be covered by the warranty.
- To protect your phone and personal data, only download applications from trusted sources, such as Play Store™. If there are improperly installed applications on your phone, the phone may not work normally or a serious error may occur. You must uninstall those applications and all associated data and settings from the phone.

4. Opening and switching applications

Multitasking is easy with Android; you can keep more than one application running at the same time. There is no need to quit an application before opening another. Use and switch between several open applications. Android manages each application, stopping and starting them as needed to make sure that idle applications don't consume resources unnecessarily.

1 Tap □. A list of recently used applications will be displayed.

2 Tap the application you want to access. This does not stop the previous app from running in the background. Make sure to tap ◁ to back out of an app after using it.

- To close an app from the recent apps list, swipe the app preview to the left or right.

5. When the screen freezes

If the screen freezes or the phone does not respond when you try to operate it, remove the battery and reinsert it. Then power the phone back on.

Getting to know your phone

Phone layout

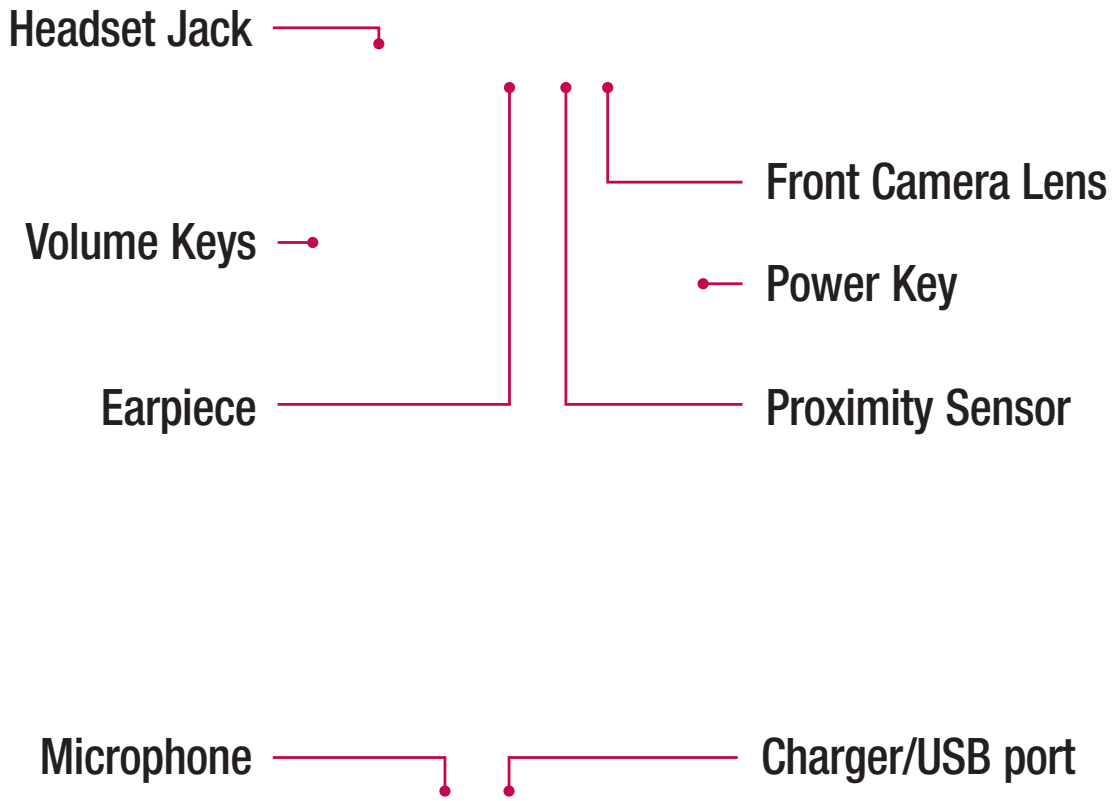

NOTE: Proximity sensor

- When receiving and making calls, the proximity sensor automatically turns the backlight off and locks the touch screen by sensing when the phone is near your ear. This extends battery life and prevents you from unintentionally activating the touch screen during calls.

⚠ WARNING

Placing a heavy object on the phone or sitting on it can damage the display and touch screen functions. Do not cover the proximity sensor with screen protectors or any other type of protective film. This could cause the sensor to malfunction.

3.5mm Handset Jack

Rear Camera Lens

Flash

Speaker

Power/Lock Key	• Turn your phone on/off by pressing and holding this key. • Short press to lock/unlock the screen
Volume Keys	**(While screen is off)** • Long press Volume Keys to launch Camera

Installing the SIM or USIM card and battery

Insert the SIM or USIM card provided by the mobile telephone service provider, and the included battery.

1 To remove the back cover, hold the phone firmly in one hand. With your other hand, lift off the back cover with your thumbnail as shown in the figure below.

2 Slide the SIM card into the SIM card slot as shown in the figure. Make sure the gold contact area on the card is facing downward.

⚠ WARNING

Do not insert a memory card into the SIM card slot. If a memory card happens to be lodged in the SIM card slot, take the device to a LG Service Centre to remove the memory card.

NOTE

- Only the microSIM cards work with the device.

3 Insert the battery.

4 To replace the cover onto the device, align the back cover over the battery compartment ❶ and press it down until it clicks into place ❷.

Charging the battery

Charge the battery before using it for first time. Use the charger to charge the battery. A computer can also be used to charge the battery by connecting the phone to it using the USB cable.

⚠ WARNING

Use only LG-approved chargers, batteries and cables. If you use unapproved chargers, batteries or cables, it may cause battery charging delay. Or this can cause the battery to explode or damage the device, which are not covered by the warranty.

The charger connector is located at the bottom of the phone. Insert the charger and plug it into a power outlet.

NOTE

- Do not open the back cover while your phone is charging.

Inserting a memory card

Your device supports up to a 32GB microSD card. Depending on the memory card manufacturer and type, some memory cards may not be compatible with your device.

⚠ WARNING

Some memory cards may not be fully compatible with the device. Using an incompatible card may damage the device or the memory card, or corrupt the data stored in it.

NOTE

- Frequent writing and erasing of data shortens the lifespan of memory cards.

1 Remove the back cover.

2 Insert a memory card with the gold-coloured contacts facing downwards.

3 Replace the back cover.

Removing the memory card

Before removing the memory card, first unmount it for safe removal.

1 Tap ○ > ⊞ > ⚙ > **Storage** > **Unmount SD card**.

2 Remove the back cover and pull out the memory card.

> ⚠ **WARNING**
> Do not remove the memory card while the device is transferring or accessing information. Doing so can cause data to be lost or corrupted or damage to the memory card or device. It is not responsible for losses that result from the misuse of damaged memory cards, including the loss of data.

Locking and unlocking the device

Pressing the **Power/Lock Key** turns off the screen and puts the device into lock mode. The device automatically gets locked if it is not used for a specified period. This helps to prevent accidental taps and saves battery power.

To unlock the device, press the **Power/Lock Key** and swipe the screen in any direction.

> **NOTE**
> - Double-tapping on the screen also can wake up the screen instead of the **Power/Lock Key**.

Changing the screen lock method

You can change the way that you lock the screen to prevent others accessing your personal information.

1 Tap ○ > ⊞ > ⚙ > **Security** > **Screen lock** > **Select screen lock**.

2 Select a desired screen lock from None, Swipe, Knock Code, Pattern, PIN and Password.

NOTE

- Create a Google account before setting an unlock pattern and remember the Backup PIN you created when creating your pattern lock.

Caution! If you haven't created a Google account on the phone and you forgot your PIN, Password, and the backup PIN, you need to perform a hard reset. But if you perform a hard reset, all user applications and user data will be deleted. Please remember to back up any important data before performing a hard reset.

TIP! Smart Lock

You can use **Smart Lock** to make unlocking your phone easier. You can set it to keep your phone unlocked when you have a trusted Bluetooth device connected to it, when it's in a familiar location like your home or work, or when it recognises your face.

Setting up Smart Lock

1 Tap ○ > ⊞ > ⚙.
2 Tap **Security** > **Smart Lock**.
3 Before you add any trusted devices, trusted places, or trusted face, you need to set up a screen lock (Pattern, PIN or Password).

Your Home screen

Touch screen tips

Here are some tips on how to navigate on your phone.

- **Tap or touch** – A single finger tap selects items, links, shortcuts and letters on the on-screen keyboard.
- **Touch and hold** – Touch and hold an item on the screen by tapping it and not lifting your finger until an action occurs.
- **Drag** – Touch and hold an item for a moment and then, without lifting your finger, move your finger on the screen until you reach the target position. You can drag items on the Home screen to reposition them.
- **Swipe or slide** – To swipe or slide, quickly move your finger across the surface of the screen, without pausing when you first tap it (so you don't drag an item instead).
- **Double-tap** – Double-tap to lockoff the screen or lock on.
- **Pinch-to-Zoom** – Use your index finger and thumb in a pinching or spreading motion to zoom in or out when using the browser, Maps, or when viewing pictures.
- **Rotate the screen** – From many applications and menus, the screen orientation adjusts to the device's physical orientation.

NOTE

- Do not press too hard; the tap screen is sensitive enough to pick up a light, yet firm tap.
- Use the tip of your finger to tap the option you want. Be careful not to tap any other buttons.

Home screen

The Home screen is the starting point for many applications and functions. It allows you to add items like app shortcuts and Google widgets to give you instant access to information and applications. This is the default canvas and accessible from any menu by tapping ○.

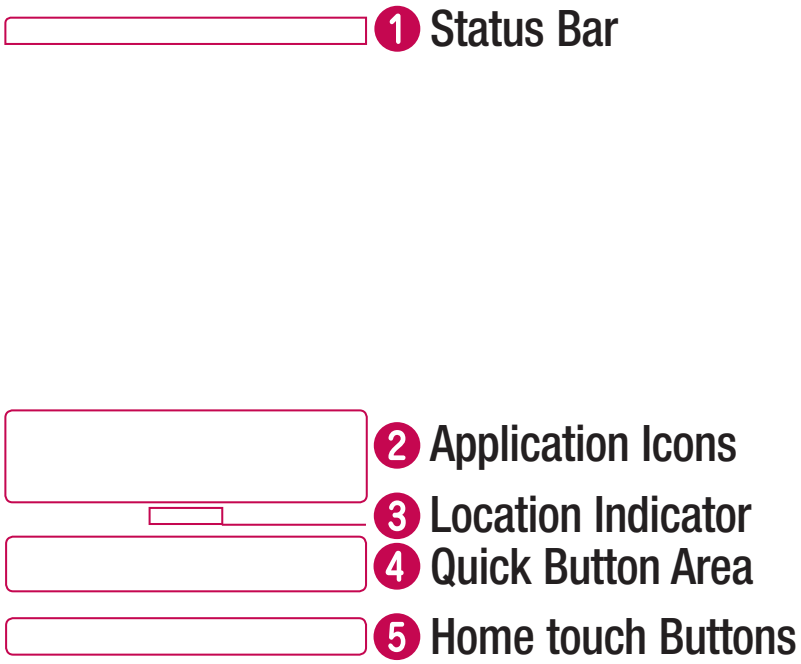

1. Shows phone's status information, including the time, signal strength, battery status and notification icons.
2. Tap an icon (application, folder, etc.) to open and use it.
3. Indicates which Home screen canvas you are currently viewing.
4. Provides one-touch access to the function in any Home screen canvas.
5.

◁ **Back Button**	Returns to the previous screen. Also closes pop-up items, such as menus, dialogue boxes and the on-screen keyboard.
○ **Home Button**	Return to the Home screen from any screen.
□ **Recent Apps Button**	Displays recently used applications. If you touch and hold this Button, it opens a menu of available options.

Extended Home screen

The operating system provides multiple Home screen canvases to provide more space for adding icons, widgets and more.

- Slide your finger left or right across the Home screen to access additional canvases.

Customizing the Home screen

You can customise your Home screen by adding apps and widgets and changing wallpapers.

Adding items on your Home screen

1 Touch and hold the empty part of the Home screen.
2 In the Add Mode menu, select the item you want to add. You then see this added item on the Home screen.
3 Drag it to the desired location and lift your finger.

TIP! To add an application icon to the Home screen from the Apps screen, touch and hold the application you want to add.

Removing an item from the Home screen

- While on the Home screen, touch and hold the icon you want to remove > drag it to ✕.

Adding an app to the Quick Button Area

- From the Apps screen or on the Home screen, touch and hold an application icon and drag it to the Quick Button Area. Then release it in the desired location.

Removing an app from the Quick Button Area

- Touch and hold the desired Quick Button, drag it to ✕.

NOTE

- The **Apps Button** ⊞ cannot be removed.

Returning to recently-used applications

1 Tap ☐. App previews of recently used applications will be displayed.

2 Tap an app preview to open the application.
- OR -
Tap ◁ to return to your previous screen.

Notifications panel

Notifications alert you to the arrival of new messages, calendar events and alarms, as well as ongoing events, such as when you are on a call.

When a notification arrives, its icon appears at the top of the screen. Icons for pending notifications appear on the left, and system icons, such as Wi-Fi and battery strength are shown on the right.

NOTE

- The available options may vary depending on the region or service provider.

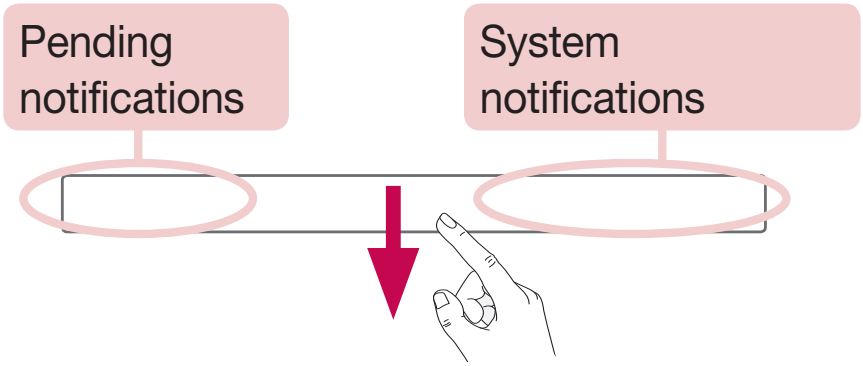

Opening the notifications panel

Swipe down from the status bar to open the notifications panel. To close the notifications panel, swipe the screen upwards or tap ◁.

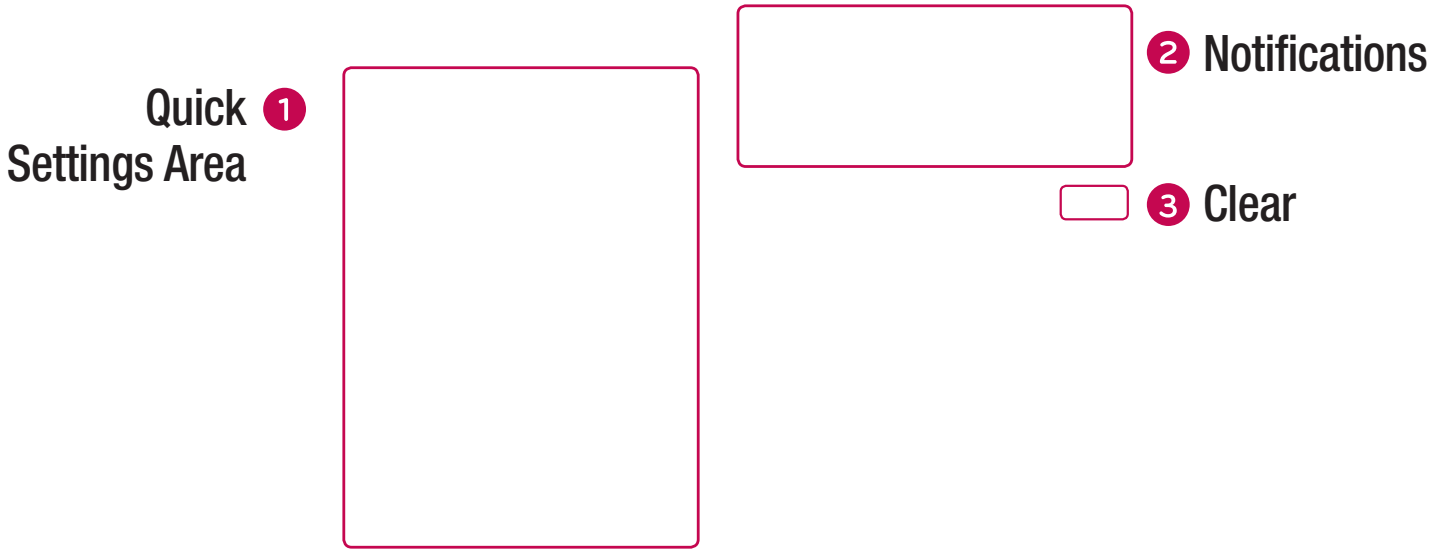

1. Tap each quick setting button to toggle it on/off.
2. Current notifications are listed, each with a brief description. Tap a notification to view it.
3. Tap to clear all the notifications.

Indicator icons on the Status Bar

Indicator icons appear on the status bar at the top of the screen to report missed calls, new messages, calendar events, device status and more.

The icons displayed at the top of the screen provide information about the status of the device. The icons listed in the table below are some of the most common ones.

Icon	Description	Icon	Description
	No SIM card inserted		A song is currently playing
	No network signal available		Vibrate mode is on
	Airplane mode is on		Battery fully charged
	Connected to a Wi-Fi network		Battery is charging
	Wired headset connected		The phone is connected to a PC via a USB cable
	Missed call		Downloading data
	Bluetooth is on		Uploading data
	System warning		GPS is on
	An alarm is set		Data is synchronizing
	New text or multimedia message		Wi-Fi hotspot is active

NOTE

- The icon's location in the status bar may differ according to the function or service.

On-screen keyboard

You can enter text using the on-screen keyboard. The on-screen keyboard appears on the screen when you tap an available text entry field.

Using the keypad and entering text

Tap once to capitalise the next letter you type. Double-tap for all caps.

Tap to go to the keyboard settings.

Tap to enter a space.

Tap to delete the previous character.

Entering accented letters

When you select French or Spanish as the text entry language, you can enter special French or Spanish characters (e.g. "á").

For example, to input "á", touch and hold the "a" key until the zoom-in key expands and displays characters from different languages. Then select the special character you want.

Gesture shot

The Gesture shot feature allows you to take a picture with a hand gesture using the front camera.

To take a photo

There are two methods for using the Gesture shot feature.

- Raise your hand, with an open palm, until the front camera detects it and a box appears on the screen. Then close your hand into a fist to start the timer, allowing you time to get ready.
  - OR -
- Raise your hand, in a clenched fist, until the front camera detects it and a box appears on the screen. Then unclench your fist to start the timer, allowing you time to get ready.

- OR -

KnockON

The KnockON feature allows you to double-tap the screen to easily turn it on or off.

To turn the screen on

1 Double-tap the centre of the Lock screen to turn the screen on.
2 Unlock the screen or access any of the available shortcuts or widgets.

To turn the screen off

1 Double-tap an empty area of the Home screen.
2 The screen will turn off.

NOTE

- Tap on the centre area of the screen. If you tap on the bottom or the top area, the recognition rate may decrease.

Knock Code

The Knock Code feature allows you to create your own unlock code using a combination of knocks on the screen. You can access the Home screen directly when the screen is off by tapping the same sequence on the screen.

NOTE

- If you enter the wrong Knock Code 6 times, it will compulsorily take you to your Google account log in/backup PIN.
- Use the fingertip instead of finger nail to tap the screen for turning it on or off.

1 Tap ○ > ⊞ > ⚙ > **Security** > **Screen lock** > **Knock Code**.
2 Tap the squares in a pattern to set your Knock Code. Your Knock Code pattern can be 3 to 8 taps.

Unlocking the screen using the Knock Code

You can unlock the screen by tapping the Knock Code pattern you already set, when the screen turns off.

Google account setup

The first time you open a Google application on your phone, you will be required to sign in with your existing Google account. If you do not have a Google account, you will be prompted to create one.

Creating your Google account

1 Tap ○ > ⊞ > ⚙ > **Accounts**.
2 Tap **Add account** > **Google** > **Or create a new account**.
3 Enter your first and last name, then tap **NEXT**.
4 Enter a username and tap **NEXT**. Your phone will communicate with Google servers and check for username availability.
5 Enter your password and tap **NEXT**.
6 Follow the instructions and enter the required and optional information about the account. Wait while the server creates your account.

Signing into your Google account

1 Tap ○ > ⊞ > ⚙ > **Accounts**.
2 Tap **Add account** > **Google**.
3 Enter your email address and tap **NEXT**.
4 After signing in, you can use Gmail and take advantage of Google services on your phone.
5 Once you have set up your Google account, your phone will automatically synchronise with your Google account on the web (if a data connection is available).

After signing in, your phone will sync with your Google services, such as Gmail, Contacts, and Google Calendar. You can also use Maps, download applications from Play Store, back up your settings to Google servers, and take advantage of other Google services on your phone.

IMPORTANT

- Some applications, such as Calendar, work only with the first Google Account you add. If you plan to use more than one Google Account with your phone, be sure to sign into the one you want to use with such applications first. When you sign in, your contacts, Gmail messages, Calendar events, and other information from these applications and services on the web are synchronised with your phone. If you don't sign into a Google Account during setup, you will be prompted to sign in or to create a Google Account the first time you start an application that requires one, such as Gmail or Play Store.
- If you have an enterprise account through your company or other organization, your IT department may have special instructions on how to sign into that account.

Connecting to Networks and Devices

Wi-Fi

You can use high-speed Internet access while within the coverage of the wireless access point (AP).

Connecting to Wi-Fi networks

1 Tap ○ > ⊞ > ⚙ > **Wi-Fi**.

2 Tap ▭ to turn Wi-Fi on and start scanning for available Wi-Fi networks.

3 Tap a network to connect to it.

- If the network is secured with a lock icon, you will need to enter a security key or password.

4 The status bar displays icons that indicate Wi-Fi status.

NOTE

- If you are out of the Wi-Fi zone or have set Wi-Fi to Off, the device may automatically connect to the Web using mobile data, which may incur data charges.

TIP! How to obtain the MAC address

Tap ○ > ⊞ > ⚙ > **Wi-Fi** > ⋮ > **Advanced** > **MAC address**.

Bluetooth

Bluetooth is a short-range communications technology that allows you to connect wirelessly to a number of Bluetooth devices, such as headsets and hands-free car kits, and Bluetooth-enabled handhelds, computers, printers, and wireless devices.

NOTE

- LG is not responsible for the loss, interception or misuse of data sent or received via the Bluetooth feature.
- Always make sure that you share and receive data with devices that are trusted and properly secured.
- If there are obstacles between the devices, the operating distance may be reduced.
- Some devices, especially those that are not tested or approved by Bluetooth SIG, may be incompatible with your device.

Pairing your phone with another Bluetooth device

1 Tap ○ > ⊞ > ⚙ > **Bluetooth**.

2 Tap ▭ to turn "ON" Bluetooth on and start scanning for available Buetooth devices.

3 Choose the device you want to pair with from the list. Once the paring is successful, your phone connects to the other device.

NOTE

- Pairing between two Bluetooth devices is a one-time process. Once a pairing has been created, the devices will continue to recognise their partnership and exchange information.

Sending data via Bluetooth

1 Select a file or item such as a contact or media file.
2 Select the option for sending data via Bluetooth.
3 Search for and pair with a Bluetooth-enabled device.

NOTE

- Due to different specifications and features of other Bluetooth-compatible devices, display and operations may be different, and functions such as transfer or exchange may not be possible with all Bluetooth compatible devices.

Receiving data via Bluetooth

1 Tap ○ > ⊞ > ⚙ > **Bluetooth**.
2 Tap ▭ to turn Bluetooth on.
3 You will receive a request to accept a pairing attempt from the sending device. Be sure to select **PAIR**.

Wi-Fi Direct

Wi-Fi Direct provides a direct connection between Wi-Fi enabled devices without requiring an access point.

Turning on Wi-Fi Direct

1 Tap ○ > ⊞ > ⚙ > **Wi-Fi**.
2 Tap ⋮ > **Advanced** > **Wi-Fi Direct**.

NOTE

- When in this menu, your device is visible to other visible Wi-Fi Direct devices nearby.

Transferring data between a PC and the device

You can copy or move data between a PC and the device.

Transferring data

1 Connect your device to a PC using the USB cable that came with your phone.
2 Open the Notifications panel, tap the current connection type, and select **Media device (MTP)**.
3 A window will pop-up on your PC, allowing you to transfer the desired data.

NOTE

- The LG Android Platform Driver is required to be installed on your PC to be able to detect the phone.
- Check the requirements for using **Media device (MTP)**.

Items	Requirement
OS	Microsoft Windows XP SP3, Vista or higher
Window Media Player version	Windows Media Player 10 or higher

Calls

Making a call

1 Tap ○ > to open the dialer.
2 Enter the number using the dialer. To delete a digit, tap .
3 After entering the desired number, tap to place the call.
4 To end the call, tap .

TIP! To enter "+" to make international calls, touch and hold 0.

Calling your contacts

1 Tap ○ > > to open your contacts.
2 Scroll through the contact list. You can also enter the contact's name in the Search field or scroll along the alphabet letters on the left edge of the screen.
3 In the list that is displayed, tap the contact you want to call.

Answering and rejecting a call

- Tap to right to answer the incoming call.
- Tap to left to decline an incoming call.

Making a second call

1 During your first call, tap ⋮ > **Add call** and enter the number.
2 Tap to place the call.
3 Both calls are displayed on the call screen. Your initial call is locked and put on hold.
4 Tap the displayed number to toggle between calls. Or tap ⋮ merge call to start a conference call.
5 To tap to hang up curr.ent call.

NOTE
- You are charged for each call you make.

Viewing your recents call logs

1 Tap ○ > > **RECENTS** tab.
2 View a list of all dialed.

Call settings

You can configure phone call settings, such as call forwarding, as well as other special features offered by your carrier.

1 Tap ○ > to open the dialer.
2 Tap ⋮ > **settings** > **Call settings** and configure the desired options.

Contacts

You can add contacts on your phone and synchronise them with the contacts in your Google Account or other accounts that support syncing contacts.

Searching for a contact

1 Tap ○ > ⊞ > 👤 to open your contacts.
2 Tap 🔍 and enter the contact name using the keyboard.

Adding a new contact

1 Tap ○ > 📞 > ⠿ and enter the new contact's number.
2 Tap 👤+ > **Create new contact**.
3 If you want to add a picture to the new contact, tap the image icon. Choose **Take photo** or **Choose photo**.
4 Enter the desired information for the contact.
5 Tap ✓ to save.

Favourites contacts

You can classify frequently called contacts as favourites.

Adding a contact to your favourites

1 Tap ○ > ⊞ > 👤 to open your contacts.
2 Tap a contact to view its details.
3 Tap the star at the top right of the screen. The star turns white.

Removing a contact from your favourites list

1 Tap ○ > ⊞ > 👤 > **FAVOURITES** tab.
2 Choose a contact to view its details.
3 Tap the hollow star at the top right of the screen. The star turns a dark colour and the contact is removed from your favourites.

Creating a group

1 Tap ○ > ⊞ > 👤.
2 Tap ⋮ > **Groups** > 👥.
3 Enter a name for the new group.
4 Tap head icon to enter contact list, Choose contacts you want to add to the group, Tap "OK" button on the top right corner.
5 Tap ✓ to save the group.

NOTE

- If you delete a group, the contacts assigned to that group will not be lost. They will remain in your contact list.

Messaging

Your phone combines text and multimedia messaging into one intuitive, easy to use menu.

Sending a message

1 Tap ○ > > .

2 Enter a contact name or contact number into the **Type name or number** field. As you enter the contact name, matching contacts appear. You can tap a suggested recipient and add more than one contact.

NOTE

- You may be charged for each text message you send. Please consult with your service provider.

3 Tap the text field and start entering your message.

4 Tap ⋮ to open the options menu. Choose from any of the available options.

TIP! You can tap ⊕ to attach the file that you want to share with message.

5 Tap ➢ to send your message.

TIP!

- The 160-character limit may vary from country to country depending on how the text message is coded and the language used in the message.
- If an image, video, or audio file is added to a text message, it will be automatically converted into a multimedia message and you will be charged accordingly.

NOTE

- When you get a text message during a call, there will be an audible notification.

Conversation view

Messages exchanged with another party are displayed in chronological order so that you can conveniently see and find your conversations.

Changing your messaging settings

Your phone's messaging settings are predefined to allow you to send messages immediately. You can change the settings based on your preferences.

- Tap ○ > 💬 > ⋮ > **Settings**.

E-mail

You can use the Email application to read email from providers other than Gmail.

Managing email accounts

To open the Email application

The first time you open the Email application, a setup wizard opens to help you add an email account.

1 Tap ○ > ⊞ > .
2 Enter your Email address, then tap ▶.
3 Choose your account type. The Email application supports the following account types: POP3, IMAP and EXCHANGE.
4 Enter your password and tap ▶.
5 Enter the required and optional information about the account and tap ▶. Wait while the server connects your account.

Adding another email account:

- Tap ○ > ⊞ > > ≡ > **Settings > Add account**.

Changing an email general settings:

- Tap ○ > ⊞ > > ≡ > **Settings** > **General settings**.

Deleting an email account:

- Tap ○ > ⊞ > ⚙ > **Accounts** > **Select email account type** > tap the account you want to delete account to delete > ⋮ > **Remove** account.

Composing and sending email

1 Tap ○ > ⊞ > > tap the icon to create a new email.

2 Enter an address for the message's intended recipient. As you enter text, matching addresses will be offered from your contacts. Separate multiple addresses with semicolons.

3 Tap the **Cc/Bcc** field to copy or blind copy to other contacts/email addresses.

4 Tap the text field and enter your message.

5 Tap to attach the file you want to send with your message.

6 Tap to send the message.

Camera and Video

Camera options on the viewfinder

You can use the camera or camcorder to take and share pictures and videos.

- Tap ○ > ⊞ > 📷.

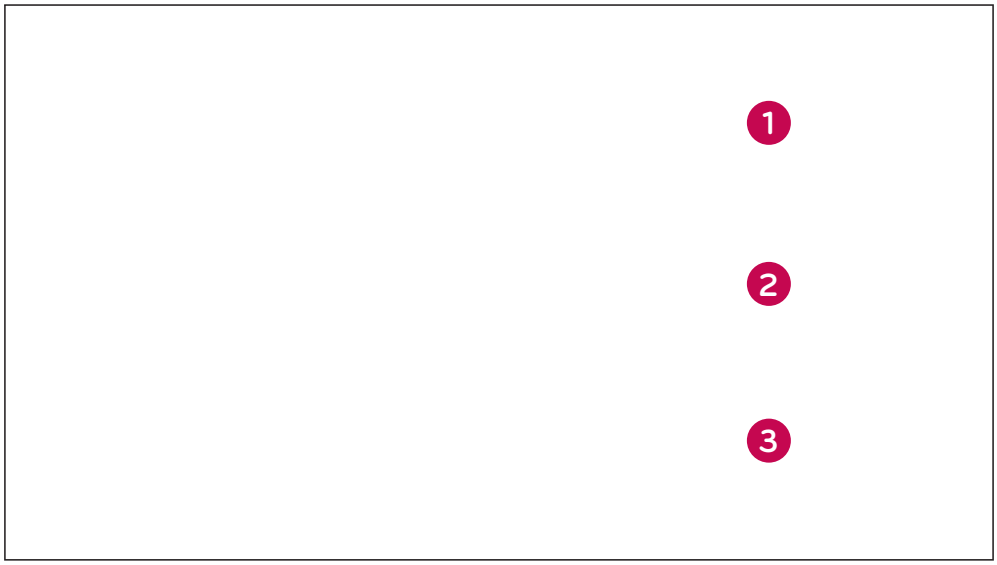

1. **Settings** – Tap this icon to open the camera settings menu.
2. **Capture** – Tap to take a photo.
3. **Shot mode** – Allows you to select the shot mode.

Taking a photo

1 Tap ○ > ⊞ > 📷.
2 Frame your subject on the screen.
3 A square around the subject indicates that the camera has focused.
4 Tap ● to take a photo. Your picture will be automatically saved to the Gallery.

Panorama mode

Allows you to take a panoramic picture.

1 Tap ○ > ⊞ > 📷.
2 Tap 📷 > 🖼.
3 Tap ● to start taking the panoramic picture.
4 Pan your phone slowly in one direction.
5 Make sure that the focus area aligns with the blue guideline while taking the photo.
6 Tap ■ to stop taking the panoramic picture.

Recording a video

1 Tap ○ > ⊞ > 📷 > 🎥.
2 Tap ⊙ to start recording the video.
3 The length of the recording is displayed on the top of the screen.
4 Tap ⏸ to pause recording video. You can resume recording again by tapping ⊙.
- OR -
Tap ■ to stop recording. Your video will be automatically saved to the Gallery.

Gallery

The Gallery application presents the pictures and videos in your storage, including those you've taken with the Camera application and those you downloaded from the web or other locations.

1 Tap ○ > ⊞ > 🖼 to view the images stored in the storage.
2 Tap an album to open it and view its contents. (The pictures and videos in the album are displayed in chronological order.)
3 Tap a picture in an album to view it.

NOTE

- Depending on the software installed, some file formats may not be supported.
- Some files may not play properly due to their encoding.

Viewing pictures

The Gallery displays your pictures in folders. When an application, such as E-mail, saves a picture, the download folder is automatically created to contain the picture. Likewise, capturing a screenshot automatically creates the Screenshots folder.

Pictures are displayed by the date they were created. Select a picture to view it full screen. Scroll left or right to view the next or previous image.

Zooming in and out

Use one of the following methods to zoom in on an image:

- Double-tap anywhere to zoom in.
- Spread two fingers apart on any place in the picture zoom in. Pinch in or double-tap the image to zoom out.

Video options

1 Tap ○ > ⊞ > 🖼.
2 Select the video you want to watch.

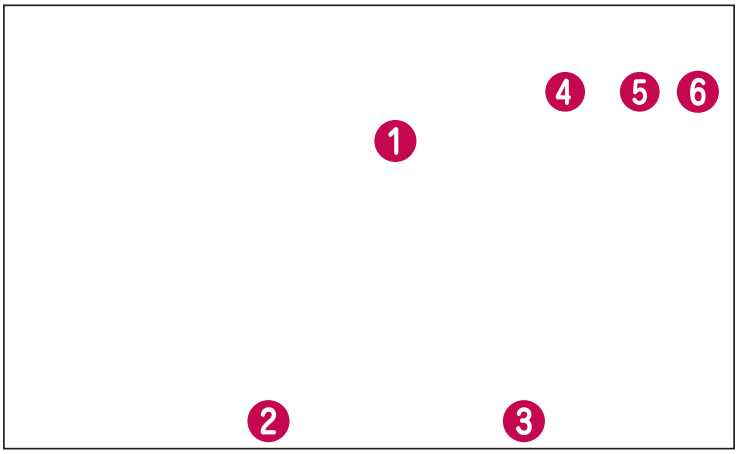

1 ⏸/▶	Tap to pause/resume video playback
2 ◀◀	Tap to rewind 3 seconds.
3 ▶▶	Tap to fast-forward 3 seconds.
4	Tap to open the available sharing options (such as Messaging or Bluetooth).
5	Tap to share Message.
6 ⋮	Tap to access additional options.

Editing photos

While viewing a photo, tap ✎.

Deleting photos/videos

Use one of the following methods:

- While viewing a photo, tap ⋮ > **Delete**.

Setting wallpaper

While viewing a photo, tap ⋮ > **Set pictures as** to set the image as wallpaper or assign it to a contact.

NOTE

- Depending on the software installed, some file formats may not be supported.
- If the file size exceeds the available memory, an error can occur when you open files.

Utilities

Clock

The Clock app gives you access to the Alarms, Timer, World clock and Stopwatch functions. Access these functions by tapping the tabs across the top of the screen or swiping horizontally across the screen.

- Tap ○ > ⊞ > .

Alarms

The Alarms tab allows you to set alarms.

1 Tap ○ > ⊞ > > .
2 Tap + to add a new alarm.
3 Adjust the settings as necessary and tap **OK**.

NOTE

- You can also tap an existing alarm to edit it.

Timer

The Timer tab can alert you with an audible signal when a set amount of time has passed.

1 Tap ○ > ⊞ > > .
2 Set the desired time on the timer.
3 Tap ▶ to start the timer.
4 Tap ❚❚ to stop the timer.

World clock

The World clock tab allows you to easily check the current time in other cities around the world.

1 Tap ○ > ⊞ > > .

2 Tap and select the desired city.

Stopwatch

The Stopwatch tab allows you to use your phone as a stopwatch.

1 Tap > > > .
2 Tap to start
3 Tap to stop the timer.
4 Tap to clear the stopwatch.

Calculator

The Calculator app allows you to perform mathematical calculations using a standard or scientific calculator.

1 Tap > > .
2 Tap the number buttons to enter numbers.
3 For simple calculations, tap the function you want to perform (+, –, x or ÷) followed by =.

Calendar

The Calendar app allows you to track your schedule of events.

1 Tap > > .
2 Tap the date you want to add an event to. Then tap .

Sound Recorder

The Voice Recorder app records audible files for you to use in a variety of ways.

Recording a sound or voice

1 Tap ○ > ⊞ > 🎙.
2 Tap ● to begin recording.
3 Tap ■ to end the recording.
4 Tap ▶ to listen to the recording.

NOTE

- Tap ☰ to access your recordings. You can listen to your saved recordings.

Voice Search

Use this application to search webpages using voice.

1 Tap ○ > ⊞ > 🎙.
2 Say a keyword or phrase when **Listening...** appears on the screen. Select one of the suggested keywords that appear.

NOTE

- This application may not be available depending on the region or service provider.

Downloads

Use this application to see what files have been downloaded through the applications.

- Tap ○ > ⊞ > ⬇.

NOTE

- This application may not be available depending on the region or service provider.

FM Radio

Your phone has a built-in FM radio so you can tune in to your favorite stations and listen on the go.

- Tap ○ > ⊞ > .

TIP! You must plug in your earphones in order to use them as an antenna.

NOTE

- This application may not be available depending on the region or service provider.

Web Browser

Internet

The internet gives you a fast, full colour world of games, music, news, sports, entertainment, and much more, right on your mobile phone.

NOTE

- Additional charges apply when connecting to these services and downloading content. Check data charges with your network provider.

- Tap ○ > ⊞ > .

Using the Web toolbar

Scroll towards the top of the webpage to access the browser toolbar.

	Tap to go back one page.
	Tap to go forward one page.
	Tap to open a new window.
	Tap to access your bookmarks.

Viewing webpages

Tap the address field, enter the web address and tap on the keyboard.

Opening a page

To go to a new page, tap > +.

Bookmarks

To bookmark the current webpage, tap ⋮ > **Save to bookmarks** > **OK**.
To open a bookmarked webpage, tap ☆ and select the desired bookmark.

History

Tap ☆ > **History** tab to open a list of recently visited webpages.

Chrome

Use Chrome to search for information and browse webpages.

- Tap ○ > ⊞ > .

NOTE

- This application may not be available depending on your region and service provider.

Searching the web by voice

Tap the address field and then tap 🎤. When prompted, say a keyword and select one of the suggested keywords that appear.

NOTE

- This feature may not be available depending on the region or service provider.

Viewing webpages

Tap the address field, and then enter a web address or search criteria.

Opening a page

To open a new page, tab ⋮ > **New tab**.

Settings

The Settings application contains most of the tools for customizing and configuring your phone. All of the settings in the Settings application are described in this section.

To open the Settings application

- Tap ◯ > ⊞ > ⚙.

Wireless & networks

Wi-Fi

Turns on Wi-Fi to connect to available Wi-Fi networks.

Bluetooth

Turns the Bluetooth wireless feature on or off to use Bluetooth.

SIM cards

You can configure SIM settings.

Data usage

Displays the data usage and mobile data usage limit.

More

- **Airplane mode**: Airplane Mode (flight mode) allows you to use many of your phone's features, such as games, and music, when you are in an area where making or receiving calls or data use is prohibited. When you set your phone to Airplane Mode, it cannot send or receive any calls or access online data.
- **Default SMS app**: Allows you to set your default SMS app.
- **Tethering & portable hotspot**: Allows you to share the internet connection
- **VPN**: From your phone, you can add, set up, and manage virtual private networks (VPNs) that allow you to connect and access resources inside a secured local network, such as your corporate network.
- **Cellular networks**: Allows you to adjust your mobile data networks.

Device

Display

- **Wallpaper**: Sets the wallpaper to use on your Home screen.
- **Lock Screen Wallpaper**: Allows you to set your Lock screen wallpaper
- **Brightness level**: Adjust the screen brightness by using the slider.
- **Adaptive brightness**: Optimize brightness level for available light.
- **Sleep**: Set the time delay before the screen automatically turns off.
- **Daydream**: Select the screen saver to display when the phone is sleeping while docked and/or charging.
- **Font size**: Select the desired font size.
- **When device is rotated**: Set to switch orientation automatically when you rotate the phone.
- **Cast screen:** Allows you to Mirror the display of your phone on a compatible device.

Sound & notification

- **Volume**: Adjust the phone's volume settings to suit your needs and environment.
- **Also vibrate for calls**: Checkmark for vibration feedback for calls.
- **Interruptions**: Allows you to set a schedule when to prevent interruptions from notifications. You can set to allow certain features to interrupt when Priority only is set.
- **Phone ringtone**: Allows you to set the ringtones for calls.
- **Default notification ringtone**: Allows you to set the default notification ringtones
- **Other sounds**: Tap to set the Dial pad tones, Screen locking sounds, Touch sounds and Vibrate on touch.
- **When device is locked**: Allows you to choose if you want to show or hide notifications on the lock screen.
- **App notifications**: Allows you to prevent apps from displaying notifications or set apps to show notifications with priority when Do not disturb is set to Priority only.

Storage

You can monitor the used and available internal memory in the device.

Battery

- **Standby intelligent power saving**: Tap the Battery Saver switch to toggle it on or off. Sets the battery charge percent level that automatically turns on Battery Saver.
- **Battery usage**: View battery usage.

Apps

Allows you to view details about the apps installed on your phone, manage their data, and force them to stop.

Users

Allow you to change the owner of the phone. you can add guest or other users.

Personal

Location

Turn on location service, your phone determines your approximate location using Wi-Fi and mobile networks. When you select this option, you're asked whether you consent to allowing Google to use your location when providing these services.

- **Mode**: Sets the how your current location information is determined.
- **Google Location Reporting**: Allows you to choose your location information settings as accessed by Google and its products.

Security

Use the Security menu to configure how to help secure your phone and its data.

- **Screen lock**: Set a screen lock type to secure your phone. Opens a set of screens that guide you through drawing a screen unlock pattern.
  If you enabled a Pattern lock type when you turn on your phone or wake up the screen, you are asked to draw your unlock pattern to unlock the screen.
- **Owner info**: Allows you to display the owner information on the lock screen in case the phone is lost.
- **Smart Lock**: Sets to keep your phone unlocked with trusted device or a place.

NOTE

- This setting name may be Pattern effect if the Screen lock is set to Pattern.

- **Encrypt phone:** Allows you to encrypt data on the phone for security. You will be required to enter a PIN or password to decrypt your phone each time you power it on.
- **Set up SIM card lock**: Sets the PIN to lock your SIM card and allows you to change the PIN.
- **Make passwords visible**: Checkmark to briefly show each character of passwords as you enter them so that you can see what you enter.
- **Device administrators**: View or deactivate phone administrators.
- **Unknown sources**: Allow installation of non-Play Store applications.
- **Storage type**: Software only.
- **Trusted credentials**: Checkmark to allow applications to access your phone's encrypted store of secure certificates and related passwords and other credentials. You use credential storage to establish some types of VPN and Wi-Fi connections. If you have not set a password for the secure credential storage, this setting is dimmed.
- **Install from phone storage**: Tap to install a secure certificate.
- **Clear credentials**: Deletes all secure certificates and related credentials and erases the secure storage's own password.
- **Trust agents**: Select apps to use without unlocking screen.
- **Screen pinning:** You can enable your device to only show a certain app's screen using screen pin.
- **Apps with usage access**: Allows you to view usage information of apps on your phone.

Accounts

Use the Accounts & sync settings menu to add, remove, and manage your Google and other supported accounts. You also use these settings to control how and whether all applications send, receive, and sync data on their own schedules and whether all applications can synchronise user data automatically.

Gmail™, Calendar, and other applications may also have their own settings to control how they synchronise data; see the sections on those applications for details. Tap **Add account** to add new account.

Language & input

Select the language for the text on your phone and for configuring the on-screen keyboard, including words that you've added to its dictionary.

Backup & reset

Change the settings for managing your settings and data.

- **Backup my data**: Back up app data, Wi-Fi passwords, and other settings to Google servers.
- **Backup account:** Displays the account that is currently being used to back up information.
- **Automatic restore**: When reinstalling an app, restore backed up settings and data.
- **DRM reset**: Reset your all DRM licenses.
- **Factory data reset**: Reset your settings to the factory default values and delete all your data. If you reset the phone this way, you are prompted to re-enter the same information as when you first started Android.

System

Date & time

Set your preferences for how the date and time is displayed.

Accessibility

Use the Accessibility settings to configure accessibility plug-ins you have installed on your phone.

- **TalkBack**: Allows you to set up the TalkBack function which assists people with impaired vision by providing verbal feedback.
- **Switch Access**: Allows you to interact with your device using one or more switches that work like keyboard keys. This menu can be helpful for users with mobility limitations that prevent them from interacting directly with the your device.

- **Captions**: Allows you to customise caption settings for those with hearing impairments.
- **Magnification gestures**: Allows you to zoom in and out by triple-tapping the screen.
- **Large text**: Sets the font size
- **High contrast text**: Checkmark to set the text to a darker contrast
- **Power button ends call**: Checkmark so that you can end voice calls by pressing the Power/Lock Key.
- **Auto-rotate screen**: Checkmark to allow the phone to rotate the screen depending on the physical phone orientation (portrait or landscape).
- **Speak passwords**: Checkmark to allow voice confirmations of characters when entering passwords.
- **Accessibility shortcut**: Allows you quickly enable accessibility feature.
- **Text-to-speech output**: Sets the preferred speech engine and speech rate.
- **Touch & hold delay**: Allows you to set the touch and hold delay.
- **Color inversion**: Allows to invert the colours of the screen and content.
- **Color correction**: Allows to correct the colours of the screen and content.

Printing

- **Cloud Print**: Tap to searching for printers. Tap the Cloud Print switch at the top right corner of the screen to toggle it **ON** or **OFF**.

About phone

View legal information, check phone status and software versions, and perform a software update.

Phone software update

Phone software update

LG Mobile phone software update from the Internet

For more information about using this function, please visit http://www.lg.com/common/index.jsp → select your country and language.

This feature allows you to conveniently update the firmware on your phone to a newer version from the Internet without needing to visit a service centre. This feature will only be available if and when LG makes a newer firmware version available for your device.

Because the mobile phone firmware update requires the user's full attention for the duration of the update process, please make sure you check all instructions and notes that appear at each step before proceeding. Please note that removing the USB data cable during the upgrade may seriously damage your mobile phone.

NOTE

- LG reserves the right to make firmware updates available only for selected models at its own discretion and does not guarantee the availability of the newer version of the firmware for all handset models.

LG Mobile Phone software update via Over-the-Air (OTA)

This feature allows you to conveniently update your phone's software to a newer version via OTA, without connecting using a USB data cable. This feature will only be available if and when LG makes a newer firmware version available for your device.

You should first check the software version on your mobile phone: **Settings** > **About phone** > **System updates**.

NOTE

- Your personal data from internal phone storage—including information about your Google account and any other accounts, your system/application data and settings, any downloaded applications and your DRM licence—might be lost in the process of updating your phone's software. Therefore, LG recommends that you backup your personal data before updating your phone's software. LG does not take responsibility for any loss of personal data.
- This feature depends on your network service provider, region and country.

About this user guide

About this user guide

- Before using your device, please carefully read this guide. This ensures that you use your phone safely and correctly.
- Some of the images and screenshots provided in this guide may appear differently on your phone.
- Your content may differ from the final product or from software supplied by service providers or carriers. This content is subject to change without prior notice. For the latest version of this guide, please visit the LG website at www.lg.com.
- Your phone's applications and their functions may vary by country, region or hardware specifications. LG cannot be held liable for any performance issues resulting from the use of applications developed by providers other than LG.
- LG cannot be held liable for performance or incompatibility issues resulting from edited registry settings or modified operating system software. Any attempt to customise your operating system may cause the device or its applications to work incorrectly.
- Software, audio, wallpaper, images, and other media supplied with your device are licensed for limited use. If you extract and use these materials for commercial or other purposes, you may be infringing copyright laws. As a user, you are fully are entirely responsible for the illegal use of media.
- Additional charges may apply for data services, such as messaging, uploading,downloading, auto-syncing and location services. To avoid additional charges, select a data plan suitable to your needs. Contact your service provider to obtain additional details.

Instructional notices

- WARNING: Situations that could cause injury to yourself or others.
- Caution!: Situations that could cause damage to your device or other equipment.
- NOTE: Notice, or additional information.
- TIP!: Usage tips when using the function.

Trademarks

- LG and the LG logo are registered trademarks of LG Electronics.
- Bluetooth® is a registered trademark of Bluetooth SIG, Inc. worldwide.
- Wi-Fi® and the Wi-Fi logo are registered trademarks of the Wi-Fi Alliance.
- All other trademarks and copyrights are the property of their respective owners.

Accessories

These accessories are available for use with the your phone. **(Items described below may be optional.)**

- Travel adaptor
- Quick Start Guide
- Stereo headset
- Data cable
- Battery

NOTE

- Always use genuine LG accessories. The supplied items are designed only for this device and may not be compatible with other devices.
- The items supplied with the device and any available accessories may vary depending on the region or service provider.

Troubleshooting

This chapter lists some problems you might encounter when using your phone. Some problems require you to call your service provider, but most are easy to fix yourself.

Message	Possible causes	Possible corrective measures
SIM or USIM card error	There is no SIM or USIM card in the phone or it is inserted incorrectly.	Make sure that the SIM or USIM card is correctly inserted.
No network connection/ Dropped network	Signal is weak or you are outside the carrier network.	Move toward a window or into an open area. Check the network operator coverage map.
	Operator applied new services.	Check whether the SIM or USIM card is more than 6~12 months old. If so, change your SIM or USIM card at your network provider's nearest branch. Contact your service provider.
Codes do not match	To change a security code, must need to confirm the new code by re-entering it.	If you forget the code, contact your service provider.
	The two codes you entered do not match.	

Message	Possible causes	Possible corrective measures
No applications can be set	Not supported by service provider or registration required.	Contact your service provider.
Calls not available	Dialing error	New network not authorised.
	New SIM or USIM card inserted.	Check for new restrictions.
	Pre-paid charge limit reached.	Contact service provider or reset limit with PIN2.
Phone cannot be turned on	On/Off key pressed too briefly.	Press the On/Off key for at least two seconds.
	Battery is not charged.	Charge battery. Check the charging indicator on the display.

Message	Possible causes	Possible corrective measures
Charging error	Battery is not charged.	Charge battery.
	Outside temperature is too hot or cold.	Make sure phone is charging at a normal temperature.
	Contact problem	Check the charger and its connection to the phone.
	No voltage	Plug the charger into a different outlet.
	Charger defective	Replace the charger.
	Wrong charger	Use only original LG accessories.
Number not allowed.	The Fixed dialling number function is on.	Check the Settings menu and turn the function off.
Impossible to receive/ send SMS & photos	Memory full	Delete some messages from your phone.
Files do not open	Unsupported file format	Check the supported file formats.

Message	Possible causes	Possible corrective measures
The screen does not turn on when I receive a call.	Proximity sensor problem	If you use a protection tape or case, make sure it has not covered the area around the proximity sensor. Make sure that the area around the proximity sensor is clean.
No sound	Vibration mode	Check the settings status in the sound menu to make sure you are not in vibration or No interruptions mode.
Hangs up or freezes	Intermittent software problem	Try to perform a software update through the website.

FAQ

Category	Question	Answer
Bluetooth Devices	What functions are available via Bluetooth?	You can connect a Bluetooth audio device, such as a Stereo/Mono headset or car kit.
Contacts Backup	How can I back up Contacts?	Contacts data can be synchronised between your phone and your Google account.
Synchronization	Is it possible to set up one-way sync with Gmail?	Only two-way synchronization is available.
Synchronization	Is it possible to synchronise all email folders?	The Inbox is automatically synchronised. You can view other folders by tapping ⋮ and selecting **Folders** to choose a folder.
Gmail Log-In	Do I have to log into Gmail whenever I want to access Gmail?	Once you have logged into Gmail, there is no need to log into Gmail again.
Google Account	Is it possible to filter emails?	No, the phone does not support email filtering.
Email	What happens when I execute another application while writing an email?	Your email is automatically saved as a draft.
Ringtone	Is there a file size limit for using MP3 files as ringtones?	There is no file size limit.

Category	Question	Answer
Message Time	My phone does not display the time of receipt for messages older than 24 hrs. How can I view the time?	Open the conversation and touch and hold the desired message. Then tap **Details**.
Navigation	Is it possible to install another navigation application on my phone?	Any application that is available at Play Store™ and is compatible with the hardware can be installed and used.
Synchronisation	Is it possible to synchronise my contacts from all my email accounts?	Only Gmail and MS Exchange server (company email server) contacts can be synchronised.
Wait and Pause	Is it possible to save a contact with Wait and Pause in the numbers?	If you transferred a contact using the Wait & Pause functions saved into the number, you cannot use those features. You must save each number again. How to save with Wait and Pause: 1. Tap ○ > ☎. 2. Dial the number, then tap ⋮. 3. Tap **Add 2-sec pause** or **Add wait**.
Security	What are the phone's security functions?	You can set the phone to require an Unlock Pattern to be entered before the phone can be accessed or used.

Category	Question	Answer
Unlock Pattern	How do I create the Unlock Pattern?	1. Tap ○ > ⊞ > ⚙ > **Security** > **Screen lock** > **Pattern**. The first time you do this, a short tutorial about creating an Unlock Pattern appears. 2. Set up your pattern by drawing it then drawing it a second time for confirmation. Precautions to take when using the pattern lock. It is very important to remember the unlock pattern you set. You can no longer access your phone if you use an incorrect pattern five times. You have five chances to enter your unlock pattern, PIN or password. If you have used all 5 opportunities, you can try again after 30 seconds. (Or, if you preset the backup PIN, you can use the backup PIN code to unlock the pattern.)

Category	Question	Answer
Unlock Pattern	What should I do if I forget the unlock pattern and I did not create my Google account on the phone?	If you forgot your pattern: If you logged into your Google account on the phone but failed to enter the correct pattern 5 times, tap the Forgot pattern button. You are then required to log in with your Google account to unlock your phone. If you have not created a Google account on the phone or you have forgotten it, you must perform a hard reset. Caution: If you perform a factory reset, all user applications and user data are deleted. Please remember to back up any important data before performing a factory reset.
Memory	Will I know when my memory is full?	Yes, you will receive a notification.
Language Support	Is it possible to change my phone's language?	The phone has multilingual capabilities. To change the language: 1. Tap ○ > ⊞ > ⚙ > **Language & input** > **Language**. 2. Tap the desired language.
VPN	How do I set up a VPN?	VPN access configuration is different for each company. To configure VPN access on your phone, you must obtain the details from your company's network administrator.

Category	Question	Answer
Screen time out	My screen turns off after only 15 seconds. How can I change the amount of time for the backlight to turn off?	1. Tap ○ > ⊞ > ⚙ > **Display** > **Sleep**. 2. Tap the preferred screen backlight timeout time.
Wi-Fi & mobile network	When the Wi-Fi and mobile networks are both available, which service does my phone use?	When using data, your phone may default to the Wi-Fi connection (if Wi-Fi connectivity on your phone is set to On). However, there is no notification when your phone switches from one to the other. To know which data connection is being used, view the mobile network or Wi-Fi icon at the top of your screen.
Home screen	Is it possible to remove an application from the Home screen?	Yes. Just touch and hold the icon until the trash can icon appears at the top and centre of the screen. Then, without lifting your finger, drag the icon to the trash can.
Application	I downloaded an application and it causes a lot of errors. How do I remove it?	1. Tap ○ > ⊞ > ⚙ > **Apps** > **Downloaded**. 2. Tap the application, then tap **Uninstall**.
Charger	Is it possible to charge my phone using a USB data cable without installing the necessary USB driver?	Yes, the phone is charged through the USB cable regardless of whether the necessary drivers are installed.

Category	Question	Answer
Alarm	Will my alarm be audible or will it go off if the phone is turned off?	No, this is not supported.
Alarm	If my ringer volume is set to vibrate, will I hear my alarm?	Your alarm is programmed to be audible even in these scenarios.
Hard Reset (Factory Reset)	How can I perform a factory reset if I cannot access the phone's Settings menu?	If your phone does not restore to its original condition, use a hard reset (factory reset) to initialise it.

LG

Life's Good