Product Service

Choose certainty.
Add value.

Report On

GNSS Testing of the
Weatherdock AG
Garmin AIS 800 Class B / SO

COMMERCIAL-IN-CONFIDENCE

Document 75942181 Report 01 Issue 1 May 2018

TÜV SÜD Product Service, Octagon House, Concorde Way, Segensworth North,
Fareham, Hampshire, United Kingdom, PO15 5RL
Tel: +44 (0) 1489 558100. Website: www.tuv-sud.co.uk

REPORT ON

GNSS Testing of the
Weatherdock AG
Garmin AIS 800 Class B / SO

Document 75942181 Report 01 Issue 1

May 2018

PREPARED FOR

Weatherdock AG
Emmericher Strasse 17
90411 Nurnberg
Germany

PREPARED BY

Sarah Jones
Key Account Manager

APPROVED BY

Simon Bennett
Authorised Signatory

DATED

23 May 2018

Product Service

CONTENTS

Section		Page No
1	**REPORT SUMMARY**	**3**
1.1	Introduction	4
1.2	Brief Summary of Results	5
1.3	Declaration of Build Status	6
1.4	Product Information	7
1.5	Deviations from the Standard	9
1.6	Modification Record	9
2	**TEST DETAILS**	**10**
2.1	Position Output	11
2.2	Static Accuracy – GPS	12
2.3	Angular Movement of the Antenna	14
2.4	Dynamic Accuracy – GPS	16
2.5	Dynamic Accuracy – Differential GPS	20
2.6	Effects of Interferring Signals	21
2.7	Position Update – Slow Speed Update Rate	22
2.8	Position Update – High Speed Update Rate	25
2.9	Failure Warnings and Status Indications	28
2.10	Accuracy of COG and SOG	29
3	**TEST EQUIPMENT USED**	**33**
3.1	Test Equipment Used	34
4	**PHOTOGRAPHS**	**35**
4.1	Photographs of Equipment Under Test (EUT)	36
5	**ACCREDITATION, DSICLAIMERS AND COPYRIGHT**	**37**
5.1	Accreditation, Disclaimers and Copyright	38
ANNEX A		A.2

Product Service

SECTION 1

REPORT SUMMARY

GNSS Testing of the
Weatherdock AG
Garmin AIS 800 Class B / SO

1.1 INTRODUCTION

The information contained in this report is intended to show verification of the GNSS Testing of the Weatherdock AG, Garmin AIS 800 Class B / SO to the requirements of IEC61108-1, as required by the AIS Class B standard IEC 62287-2 Ed 1 (2013).

Objective	To perform GNSS Testing to determine the Equipment Under Test's (EUT's) compliance with the Test Specification, for the series of tests carried out.
Manufacturer	Weatherdock AG
Model Number(s)	Garmin AIS 800 Class B / SO
Serial Number(s)	5N7000000
Number of Samples Tested	One
Test Specification/Issue/Date	IEC 61108-1 Second Edition 2003-07
Order Number Date	5669 05 March 2018
Start of Test	23 March 2018
Finish of Test	05 April 2018
Name of Engineer(s)	Bidhan Bhandari
Related Document(s)	GPS SPS Performance Specification - USA DoD - 3rd Edition October 2001

Product Service

1.2 BRIEF SUMMARY OF RESULTS

A brief summary of the tests carried out in accordance with IEC 61108-1 is shown below.

Section	Spec Clause	Test Description	Result	Comments/Base Standard
2.1	5.6.2	Position Output	-	See Annex A
2.2	5.6.4.1.1*	Static accuracy - GPS	Pass	
2.3	5.6.4.2*	Angular movement of the antenna	Pass	
2.4	5.6.4.3.1*	Dynamic accuracy - GPS	Pass	
2.5	5.6.4.3.2	Dynamic accuracy - Differential GPS	N/A	
2.6	5.6.9	Effects of specific interfering signals	-	Refer to BSH report
2.7	5.6.10	Position update	Pass	
2.8	5.6.12.1	Failure warnings and status indications - General alarm tests	N/A	RAIM not supported
2.9	5.6.12.2	Failure warnings and status indications - Test of integrity monitoring using RAIM	N/A	RAIM not supported
2.10	5.6.13	Accuracy of COG and SOG	Pass	

N/A Not Applicable
N/T Not Tested

Product Service

1.3 DECLARATION OF BUILD STATUS

MAIN EUT			
MANUFACTURING DESCRIPTION	AIS Class B SO System		
MANUFACTURER	Weatherdock AG		
MODEL NAME/NUMBER	GARMIN AIS 800 / easyTRX3		
PART NUMBER	006-B3133-00 / A30000		
SERIAL NUMBER	000000002		
HARDWARE VERSION	01		
SOFTWARE VERSION	1.0.1		
PSU VOLTAGE/FREQUENCY/CURRENT	12 V / 24 V DC		
HIGHEST INTERNALLY GENERATED / USED FREQUENCY	162.025 MHz		
FCC ID (if applicable)	n.a.		
INDUSTRY CANADA ID (if applicable)	n.a.		
TECHNICAL DESCRIPTION (a brief description of the intended use and operation)	Transponder for the "Automatic Identification System" (AIS) in the marine band used on non-SOLAS vessels.		
COUNTRY OF ORIGIN	Germany		
RF CHARACTERISTICS (if applicable)			
TRANSMITTER FREQUENCY OPERATING RANGE (MHz)	156.025 - 162.025 MHz		
RECEIVER FREQUENCY OPERATING RANGE (MHz)	156.025 - 162.025 MHz		
INTERMEDIATE FREQUENCIES	n.a.		
EMISSION DESIGNATOR(S): (i.e. G1D, GXW)	n.a.		
MODULATION TYPES: (i.e. GMSK, QPSK)	GMSK		
OUTPUT POWER (W or dBm)	5 W		
SEPARATE BATTERY/POWER SUPPLY (if applicable)			
MANUFACTURING DESCRIPTION	n.a.		
MANUFACTURER			
TYPE			
PART NUMBER			
PSU VOLTAGE/FREQUENCY/CURRENT			
COUNTRY OF ORIGIN			
MODULES (if applicable)			
MANUFACTURING DESCRIPTION	n.a.		
MANUFACTURER			
TYPE			
POWER			
FCC ID			
INDUSTRY CANADA ID			
EMISSION DESIGNATOR			
DHSS/FHSS/COMBINED OR OTHER			
COUNTRY OF ORIGIN			
ANCILLARIES (if applicable)			
MANUFACTURING DESCRIPTION	n.a.		
MANUFACTURER			
TYPE			
PART NUMBER			
SERIAL NUMBER			
COUNTRY OF ORIGIN			

I hereby declare that the information supplied is correct and complete.

Name: Jürgen Zimmermann Position held: CTO
Date: 16. May 2018

weatherdock AG
Emmericher Straße 17
D-90411 Nürnberg
info@weatherdock.de

1.4 PRODUCT INFORMATION

1.4.1 Technical Description

The Equipment Under Test (EUT) was a Weatherdock AG, Garmin AIS 800 Class B / SO as shown in the photograph below. A full technical description can be found in the manufacturer's documentation.

Equipment Under Test

1.4.2 Physical Test Configuration

The EUT was configured as supplied by the customer, as follows:

The NMEA sentence data was taken directly from the EUT data output port / cable.

ID	Name	Details
A	Integral Antenna	The EUT was powered by 12 V DC supply RS232 output to test laptop, EUT antenna fitted as in the production model See Figure 1, below.

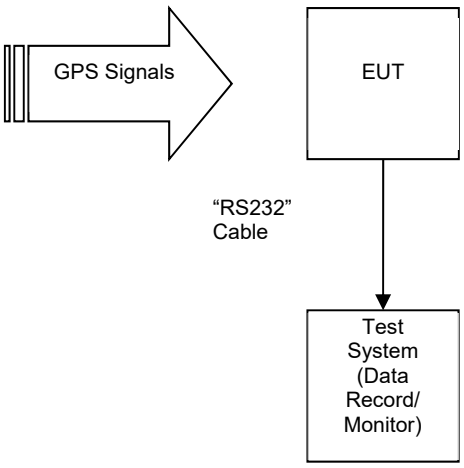

Figure 1: System Configuration A Schematic

The Test System was a laptop running Tera Term; a serial terminal program that records the NMEA output of the EUT and adds a timestamp (with a 1 ms resolution) to each sentence.

GPS Signals applied are recorded at the appropriate test section.

Physical setup was defined by the standard for Static Accuracy (and Angular Movement of the Antenna) tests. GPS Signal input was as per "live" (real world) conditions at the time/location.

The physical configuration for all other tests was as was most practical at the time. GPS signal input was checked using a reference receiver to provide enough for high (but not maximum*) signal-to-noise ratios (SNRs) on all Satellite Vehicles (SVs) in view. * i.e. attenuated down until SNRs began to drop then maintained.

All relevant physical configurations are described or illustrated in the appropriate test section.

1.1.1 Modes of Operation

Modes of operation available on the EUT:

ID	Category	Name	Details
1	Operate	Operational	EUT powered on and transmitting
2	Off	Off	EUT powered off.

Note: Modes, 1 and 2 were used for testing to the IEC 61108 Standard.

1.5 DEVIATIONS FROM THE STANDARD

No deviations from the applicable test standards or test plan were made during testing.

1.6 MODIFICATION RECORD

No modifications were made to the EUT during testing.

Product Service

SECTION 2

TEST DETAILS

GNSS Testing of the
Weatherdock AG
Garmin AIS 800 Class B / SO

2.1 POSITION OUTPUT

2.1.1 Specification Reference

IEC 61108-1, Clause 5.6.2

Refer to Annex A for Manufacturer Declaration.

2.2 STATIC ACCURACY – GPS

2.2.1 Specification Reference

IEC 61108-1, Clause 5.6.4.1.1

2.2.2 Equipment Under Test and Modification State

Garmin AIS 800 Class B / SO, S/N: 5N7000000 - Modification State 0

2.2.3 Date of Test

28 March 2018 – 29 March 2018

2.2.4 Test Equipment Used

The major items of test equipment used for the above tests are identified in Section 3.1.

2.2.5 Environmental Conditions

Ambient Temperature	7.4 – 16.6°C
Relative Humidity	61.8 – 40.5%

2.2.6 Test Method

Following testing is required by specification:

Static Test Site Clause 5.5.2

"The antenna shall be mounted according to the manufacturer's instructions at a height of between 1 m and 1,5 m above the electrical ground in an area providing clear line of sight to the satellites from zenith through to an angle of +5° above horizontal. The position of the antenna shall be known, with reference to WGS 84 to an accuracy of better than 0,1 m in (x, y, z). Maximum cable lengths as specified by the manufacturer shall be used during testing.

All static tests shall utilize actual GPS signals."

Test Method Clause 5.6.4.1.1

"Position fix measurements shall be taken over a period of not <24 h. The absolute horizontal position accuracy shall be within 13 m (95 %), having discarded measurements taken in conditions of HDOP ≥ 4 and PDOP ≥6."

Performance Standard Clause 4.3.1.1

"(M.112/A3.4) The GPS receiver equipment shall have static accuracy such that the horizontal position of the antenna is determined to within 100 m (95 %) with horizontal dilution of precision (HDOP) ≤4 (or PDOP ≤6). Since Selective Availability has been set to zero, the static accuracy has been determined to be within 13 m (95 %) as specified by the GPS SPS Performance Standards of October 2001."

2.2.7 Test Setup

Test Setup

2.2.8 Test Results

EUT was placed on static test site with non-conductive platform. It was operated and monitored continuously for the period of measurements as given below.

Test Parameters	Units	Result	Limit
Test Specific			
Non-Conductive Platform Height	m	1.43	1-1.5
General			
Time to Acquire Valid Position	s	29.952	-
Performance Check			
Start Time / Event of Performance Check	-	Position Lock	-
Measurement Duration	hh:mm:ss	24:00:23	>24h
Total Number of Position Solutions	-	86424	-
Number of Solutions with HDOP≤4 and PDOP≤6	-	85423	-
Measurement of error ≤13m	%	100	>95

2.3 ANGULAR MOVEMENT OF THE ANTENNA

2.3.1 Specification Reference

IEC61108-1, Clause 5.6.4.2

2.3.2 Equipment Under Test and Modification State

Garmin AIS 800 Class B / SO, S/N: 5N7000000 - Modification State 0

2.3.3 Date of Test

04 April 2018 – 05 April 2018

2.3.4 Test Equipment Used

The major items of test equipment used for the above tests are identified in Section 3.1.

2.3.5 Environmental Conditions

	04 April 2018	05 April 2018
Ambient Temperature	8.6 °C	9.7°C
Relative Humidity	35.4%	32%

2.3.6 Test Method

The following testing is required by the specification:

Test Method Clause 5.6.4.2

"The static tests specified in 5.6.4.1.1 and 5.6.4.1.2 shall be repeated with the antenna performing an angular displacement of ±22,5° (simulating roll) in a period of about 8 s (see IEC 60721-3-6) during the duration of the tests.

The results shall be as in 5.6.4.1.1 and 5.6.4.1.2."

Performance Standard Clause 4.3.3.1

"(M.112/A3.4) The GPS receiver equipment shall have static accuracy such that the horizontal position of the antenna is determined to within 100 m (95 %) with horizontal dilution of precision (HDOP) ≤ 4 (or PDOP ≤6). Since Selective Availability has been set to zero, the static accuracy has been determined to be within 13 m (95 %) as specified by the GPS SPS Performance Standards of October 2001."

2.3.7 Test Setup

Test Set Up

2.3.8 Test Results

EUT was placed on static test site on a non-conductive platform. It was operated and monitored continuously for the period of measurement as given below.

Test Parameters	Units	Result	Limit
Test Specific			
Non-Conductive Platform Height	m	1.43	1-1.5
General			
Time to Acquire Valid Position	s	20.327	-
Performance Check			
Start Time / Event of Performance Check	-	Position Lock	-
Measurement Duration	hh:mm:ss	24:03:59	>24h
Total Number of Position Solutions	-	86430	-
Number of Solutions with HDOP≤4 and PDOP≤6	-	85759	-
Measurement of error ≤13m	%	99.96	>95

2.4 DYNAMIC ACCURACY – GPS

2.4.1 Specification Reference

IEC 61108-1, Clause 5.6.4.3.1

2.4.2 Equipment Under Test and Modification State

Garmin AIS 800 Class B / SO, S/N: 5N7000000 - Modification State 0

2.4.3 Date of Test

23 March 2018

2.4.4 Test Equipment Used

The major items of test equipment used for the above tests are identified in Section 3.1.

2.4.5 Environmental Conditions

Ambient Temperature	22.6°C
Relative Humidity	43.2%

2.4.6 Test Method

The following testing is required by the specification:

<u>IEC-61108:2003 Clause 5.6.4.3.1</u>

"The tests for dynamic accuracy are a practical interpretation of the conditions set out in IEC 60721-3-6, Table V, item e), X – direction (surge) and Y – direction (sway). These are stated as surge 5 m/s2 and sway 6 m/s2 for all classes of environment. When using a simulator, the simulator characteristics shall accurately represent the signals required.

The results of the test performed by simulation facilities shall be identical with those in a) and b) below:

a) a fully locked and settled EUT travelling in a straight line at 48 knots ± 2 knots for a minimum of 1,2 min which is reduced to 0 knots in the same straight line in 5 s, shall not indicate a positional offset >±13 m from the final position 10 s after coming to rest;

b) a fully locked and settled EUT travelling at least 100 m at 24 knots ± 1 knot in a straight line then subjected, for at least 2 min, to smooth deviations either side of the straight line of approximately 2 m at a period of 11 s to 12 s shall remain in lock and follow the actual position to within a lane of 30 m wide centred on the mean direction of motion."

2.4.7 Test Setup

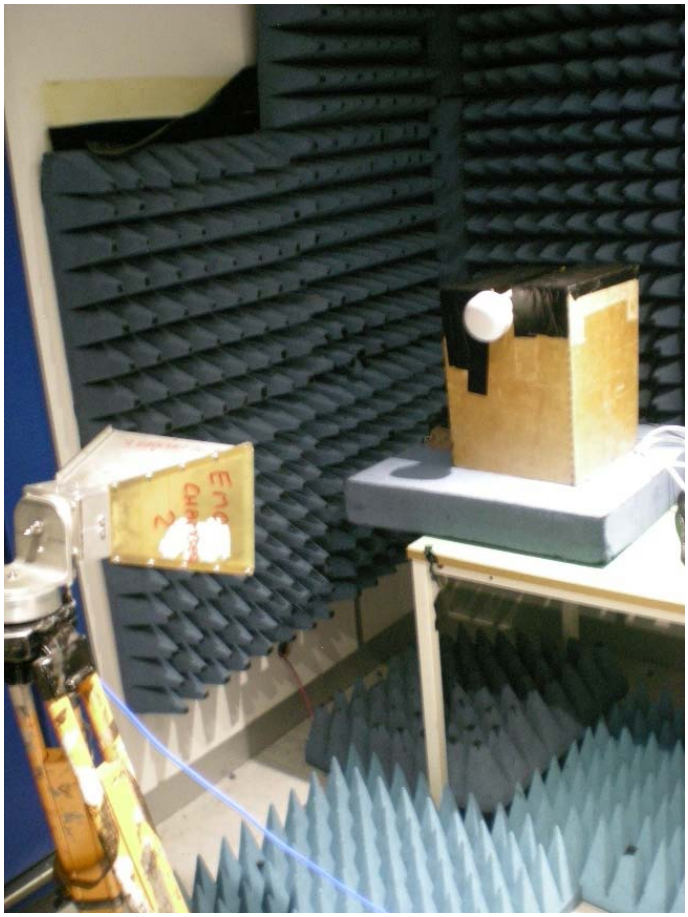

Test Set Up

Product Service

2.4.8 Test Results

Dynamic Accuracy A

EUT and GPS simulator were started simultaneously. EUT acquired position lock after the acquisition time; the simulator ran a dynamic position travelling at 48 knots in a straight line for 10 minutes before decelerating to 0 knots in 5 seconds. The position output 10 second after coming to rest was determined by NMEA 0183 output.

Test Parameters	Units	Result	Limit
General			
Signal Type	Live / Simulated	Simulated	-
EUT Started Simultaneously	Y/N	Y	-
Time to Acquire Valid position	S	44.810	-
Test Specific			
Position Error 10s after coming to rest	M	1.86	≤13
Performance Specific			
Start Time / Event of performance check	-	10 s After performance comes to rest	-
Total Number of Position solutions	-	601	-
Number of solution with HDOP ≤4 and PDOP ≤6	-	601	-
Measurement Duration	Min	10	-
Measurement of error ≤13m	%	100	-

Dynamic Accuracy B

EUT and GPS simulator were started simultaneously, and the EUT acquired the position lock after the acquisition time stated in the table below. The simulator ran a dynamic position travelling at 24 knots in a straight line for 10 minutes before starting to oscillate smoothly ±2m either side of the original path for further 20 minutes.

EUT position output error compared to the dynamic position was determined from EUT NMEA output.

Test Parameters	Units	Result	Limit
General			
Signal Type	Live / Simulated	Simulated	-
EUT Started Simultaneously	Y/N	Y	-
Initial Acquisition Time	S	47.680	-
Modified Performance Check	P/F	P	P
Modified Performance Check*			
Start Time / Event of performance check	-	Start of Oscillation	-
Total Number of Measurement	-	601	-
Number of solution with HDOP ≤4 and PDOP ≤6	-	601	≥100
Measurement Duration	Min	10	>2
Measurement of error ≤15m	%	100	100

*A modified performance check was carried out during 20 minutes oscillation period in order to determine that the position error was not outside ±15m tolerance level. Hence, the performance check differs from normal in position error limit, which is set to 100% within ±15m

2.5 DYNAMIC ACCURACY – DIFFERENTIAL GPS

2.5.1 Specification Reference

IEC 61108-1, Clause 5.6.4.3.2

Test not applicable – EUT does not support DGPS.

2.6 EFFECTS OF INTERFERING SIGNALS

2.6.1 Specification Reference

IEC 61108-1, Clause 5.6.9

Refer to BSH Report: BSH_4542_001_4143218_18-GPS-Test Report

2.7 POSITION UPDATE – SLOW SPEED UPDATE RATE

2.7.1 Specification Reference

IEC 61108-1, Clause 5.6.10.1

2.7.2 Equipment Under Test and Modification State

Garmin AIS 800 Class B / SO, S/N: 5N7000000 - Modification State 0

2.7.3 Date of Test

23 March 2018

2.7.4 2.7.1.4 Test Equipment Used

The major items of test equipment used for the above tests are identified in Section 3.1.

2.7.5 Environmental Conditions

Ambient Temperature	22.4°C
Relative Humidity	41.2%

2.7.6 Test Method

The following testing is required by the specification:

Test Method Clause 5.6.10.1

"The EUT shall be placed upon a platform, moving in approximately a straight line, at a speed of 5 knots ± 1 knot. The position output of the EUT shall be checked at intervals of 10 s, over a period of 10 min. The output position shall be observed to be updated on each occasion.

This test may be carried out by using a simulator.

Record the IEC 61162 output of the EUT during this test and confirm that received positions at the end of each interval are in compliance with the real or simulated reference position."

Performance Standard Clause 4.3.9

"(M.112/A3.12) The GPS receiver equipment shall generate and output to a display and digital interface a new position solution at least once every 1 s.

NOTE For craft meeting the HSC code, a new position solution at least every 0,5 s is recommended.

(M.112/A3.13) The minimum resolution of position i.e. latitude and longitude shall be 0,001 min."

Performance standard clause 5.6.10.1

"The position output of the EUT shall be checked at intervals of 10 s, over a period of 10 min. The output position shall be observed to be updated on each occasion."

Performance standard clause 5.6.10.2

"[….] received positions at the end of each interval are in compliance with the real or simulated reference position."

2.7.7 Test Setup

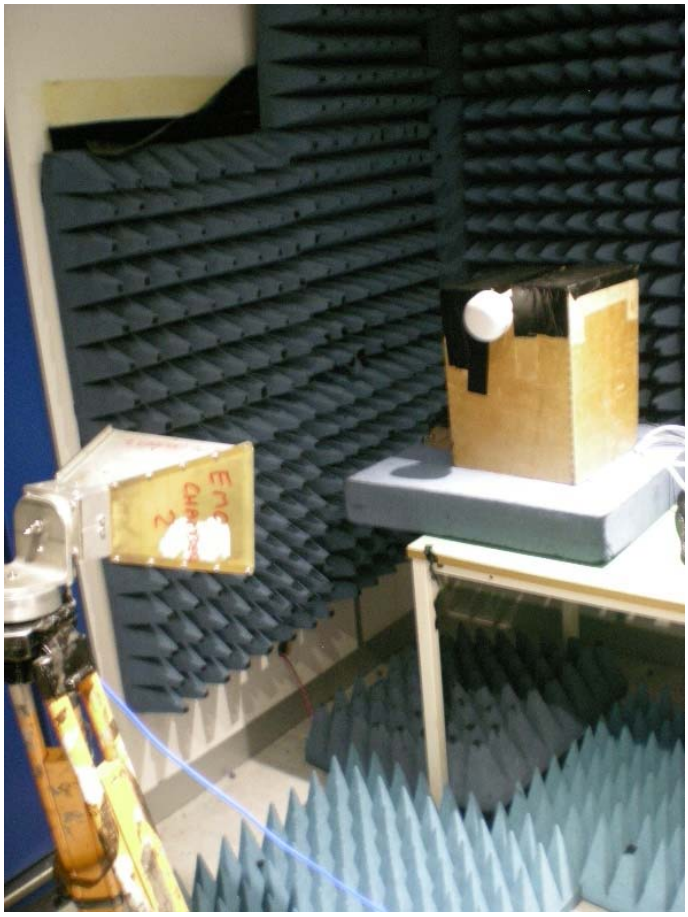

Test Set Up

2.7.8 Test Results

EUT was locked and settled on a static simulated position; the simulated scenario then started period of motion at the speed given in the table below. During the observation period of ten minutes, the time between position output messages and the time between position updates was checked.

Test Parameters	Units	Result	Limit
General			
Time to Acquire Valid Position	S	47.930	
Test Specific			
Scenario Velocity	Knots	4.86	-
Minimum Position Change (Min[dLat+dLon])*	Decimal Degrees	1.0 x 10-6	>0
Maximum Position Update Interval	s	1.010	≤10
Sample Latitude Field Value	DDMM.X	5051.01839	Resolution must be to 0.001
Sample Longitude Field Value	DDMM.X	00108.61688	Resolution must be to 0.001
Performance Check			
Start Time / Event of Performance Check	-	Start of steady velocity	-
Measurement duration	Min	10	10
Total number of position solutions	-	601	-
Number of Solutions with HDOP ≤4 and PDOP ≤6	-	601	≥100
Measurement of error ≤13m	%	100	≥95

*Note: If the minimum position change were zero, it would indicate that position output was not updated; hence any result above zero would indicate that the output was updated.

Product Service

2.8 POSITION UPDATE – HIGH SPEED UPDATE RATE

2.8.1 Specification Reference

IEC 61108-1, Clause 5.6.10.2

2.8.2 Equipment Under Test and Modification State

Garmin AIS 800 Class B / SO, S/N: 5N7000000 - Modification State 0

2.8.3 Date of Test

23 March 2018

2.8.4 Test Equipment Used

The major items of test equipment used for the above tests are identified in Section 3.1.

2.8.5 Environmental Conditions

Ambient Temperature	22.5°C
Relative Humidity	41.6%

2.8.6 Test Method

The following testing is required by the specification:

Test Method Clause 5.6.10.2

"The EUT shall be placed upon a platform, moving in approximately a straight line, at a speed of 50 knots ± 5 knots. The position output of the EUT shall be checked at intervals of 1 s, over a period of 10 min. The output position shall be observed to be updated on each occasion. This test may be carried out by using a simulator with a speed of 70 knots at intervals of 0,5 s.

Record the IEC 61162 output of the EUT during this test and confirm that received positions at the end of each interval are in compliance with the real or simulated reference position."

Performance Standard Clause 4.3.9

"(M.112/A3.12) The GPS receiver equipment shall generate and output to a display and digital interface a new position solution at least once every 1 s.

NOTE For craft meeting the HSC code, a new position solution at least every 0.5 s is recommended.

(M.112/A3.13) The minimum resolution of position i.e. latitude and longitude shall be 0,001 min."

Performance standard clause 5.6.10.1

"The position output of the EUT shall be checked at intervals of 1 s, over a period of 10 min. The output position shall be observed to be updated on each occasion."

Performance standard clause 5.6.10.2

"[….] received positions at the end of each interval are in compliance with the real or simulated reference position."

2.8.7 Test Setup

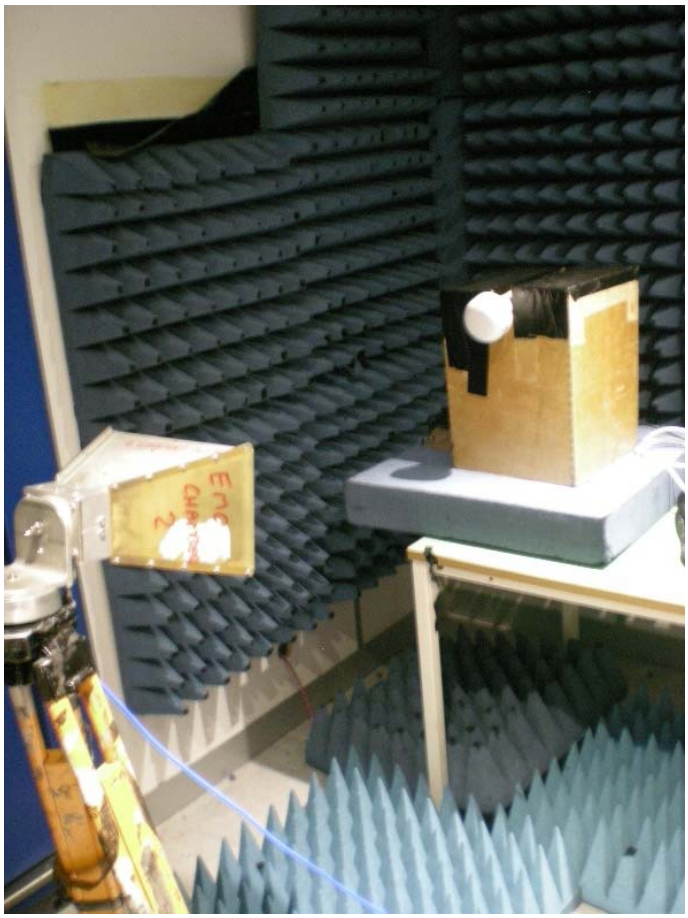

Test Set Up

Product Service

2.8.8 Test Results

EUT was locked and settled in the static simulated position; the simulated scenario then started period of motion at the speed given in the table below. During the observation period of ten minutes, the time between position output messages and the time between position updates was checked.

Test Parameters	Units	Result	Limit
General			
Time to Acquire Valid Position	S	45.810	
Test Specific			
Scenario Velocity	Knots	70	-
Minimum Position Change (Min[dLat+dLon])	Decimal Degrees	0.000511	>0
Maximum Position Update Interval	s	1.010	≤10
Sample Latitude Field Value	DDMM.X	5052.99738	Resolution must be to 0.001
Sample Longitude Field Value	DDMM.X	00110.69009	Resolution must be to 0.001
Performance Check			
Start Time / Event of Performance Check	-	Start of steady velocity	-
Measurement duration	Min	10	10
Total number of position solutions	-	601	-
Number of Solutions with HDOP ≤4 and PDOP ≤6	-	601	≥100
Measurement of error ≤13m	%	100	≥95

2.9 FAILURE WARNINGS AND STATUS INDICATIONS

2.9.1 Specification Reference

IEC 61108-1, Clause 5.6.12

Not tested.

2.10 ACCURACY OF COG AND SOG

2.10.1 Specification Reference

IEC 61108-1, Clause 5.6.13

2.10.2 Equipment Under Test and Modification State

Garmin AIS 800 Class B / SO, S/N: 5N7000000 - Modification State 0

2.10.3 Date of Test

23 March 2018

2.10.4 Test Equipment Used

The major items of test equipment used for the above tests are identified in Section 3.1.

2.10.5 Environmental Conditions

Ambient Temperature	22.1°C
Relative Humidity	46.6%

2.10.6 Method

Test Method and Performance Standard "Accuracy of COG and SOG" clause 4.3.12.1

"The EUT shall be set up on an appropriate mobile unit or simulator and all outputs indicating course over ground shall be monitored.

At a constant forward direction, the forward speed shall be within 0 knots to 1 knot. Ten seconds after being in the range, measurements shall be made for a duration of 2 min. This cycle shall be repeated for all speed ranges of the Table 2 above.

The test results shall be observed on the display and the approved interface. For SOG tests, no reading of the speed indicator shall differ from the constant speed being applied at the time by more than 2 % of that speed or 0,2 knots, whichever is the greater.

For COG tests, the differences between the reference direction and measured course over ground of in each test cycle shall not exceed the limits of Table 2."

Performance Standard “Accuracy of COG” clause 4.3.12.1

“The error in the COG (the path of the antenna position over ground) due to the actual ship’s speed over ground shall not exceed the following values:

Speed range (knots)	Accuracy of COG output to user
0 to ≤1 knot	Unreliable or not available
>1 to ≤1 knots	±3°
>17 knots	±1°

Due to the limitations of GPS receivers of this standard, it is not appropriate to include requirements for COG errors attributed to high dynamic movement. Such limitations shall be in the manufacturer’s operational manual.”

Performance Standard “ACCURACY OF SOG INFORMATION” Clause 4.3.12.2

“Errors in the SOG (velocity of the antenna position over ground) shall not exceed 2 % of the actual speed or 0,2 knots, whichever is greater.”

Test method and Performance Standard “Validity of COG and SOG” Clause 5.6.13

“The quality indicator of the GGA and VTG message of IEC 61162 shall be used for interpretation of validity of COG and SOG.”

Method of testing

“Check of digital interface with IEC 61162. With the EUT normally operating, preclude invalid position data by reducing the number of received satellites. Investigate the content of the resultant GGA and VTG.”

Required Results

“Observe that the quality indicators of GGA and VTG messages of IEC 61162 turn to invalid. Observe that the COG and SOG information contained in VTG message of IEC 61162 is replaced by null fields.”

2.10.7 Test Setup

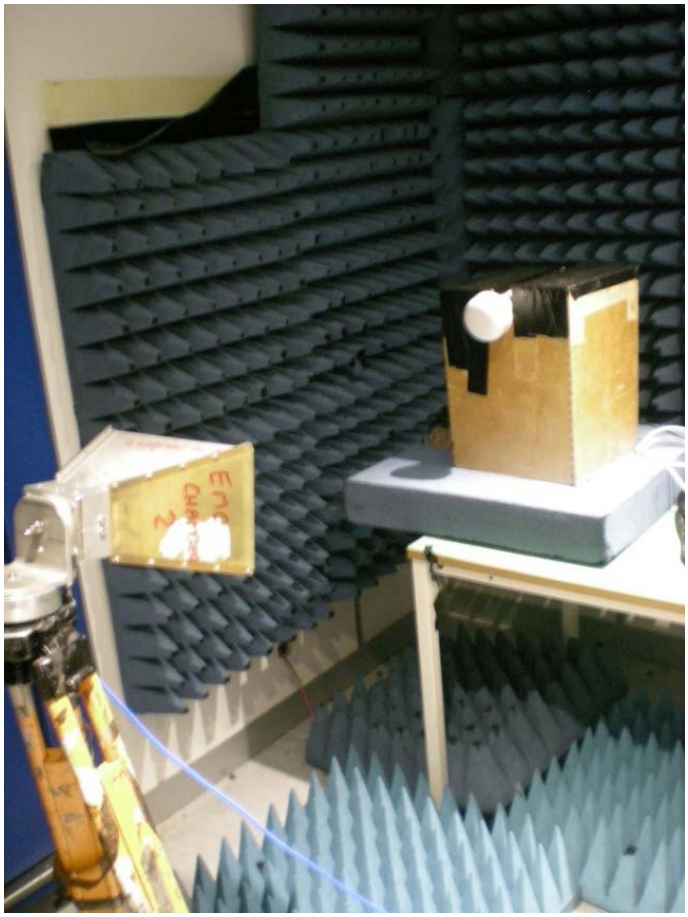

Test Set Up

2.10.8 Test Results

Accuracy of COG and SOG in General

EUT was locked and settled on a scenario simulating motion at a constant speed and direction. During the two-minute observation period started 10s after ‘being in the range’,* the COG and SOG were checked (in the sentence output) against the requirements.

* Being in range means both the criteria were met: the position solution was locked and stable and simulated speed was stable.

The relevant applied COG and SOG, the sentence type (3 letter mnemonic) and the maximum COG and SOG outputs are recorded in the table below.

Accuracy of COG and SOG for – 0 knots to 1 knot

Test Parameters	Units	Results	Limit
Simulated Course Over Ground	º True	N/A	-
Simulated Speed Over Ground	Knots	0	0 to ≤1
Sentence Type	-	RMC	VTG or RMC
Max COG error	º True	0	0*
Max SOG error	Knots	0.068	0.2

* When the null field occurred, an error value of 0 was calculated. Any field that was not null/unreliable/not available would count as an error

Accuracy of COG and SOG for – 1 knot to 17 knots

Test Parameters	Units	Results	Limit
Simulated Course Over Ground	º True	N/A	-
Simulated Speed Over Ground	Knots	4.85	0 to ≤17
Sentence Type	-	RMC	VTG or RMC
Max COG error	º True	0.45	3
Max SOG error	Knots	0.029	0.2

Accuracy of COG and SOG for over 17 knots

Test Parameters	Units	Results	Limit
Simulated Course Over Ground	º True	90	-
Simulated Speed Over Ground	Knots	19.438	>17
Sentence Type	-	RMC	VTG or RMC
Max COG error	º True	0.07	1
Max SOG error	Knots	0.029	0.389

At the end of 17 knots test, validity of COG and SOG were observed by removing one satellite at a time until only 2 remained (insufficient for lock). The GGA and RMC validity flags were observed to turn to invalid and the COG and SOG field were observed to be null.

Product Service

SECTION 3

TEST EQUIPMENT USED

Product Service

3.1 TEST EQUIPMENT USED

List of absolute measuring and other principal items of test equipment.

Instrument	Manufacturer	TE No.	Calibration Date	Calibration due
Digital Hygrometer	Radio Spares	4300	30/08/2017	30/08/2018
Hygrometer	Rotronic	3068	01/06/2017	01/06/2018
GNSS Simulator	Spirent	4596	11/08/2017	11/08/2018
Spectrum Analyser	Agilent Technologies	3348	20/09/2017	20/19/2018
Antenna (Double Ridge Guide, 1GHz-18GHz)	EMCO	0234	-	TU
Antenna	EMCO	34	08/12/2017	08/12/2018
Programmable Power Supply	Iso-Tech	2435	-	TU
Directional Coupler	Narda	0503	-	TU
50 Ohm Load	Bird	0472	13/09/2017	13/09/2018
Attenuator	Weinschel	4867	03/05/2017	03/05/2018
Cable	Reynolds	2402	19/09/2017	19/09/2018
Network Analyser	Agilent Technologies	3548	20/09/2017	20/09/2018
Calibration Kit	Rohde & Schwarz	4368	06/03/2018	06/03/2019
Multimeter	Iso-tech	2421	08/08/2017	08/08/2018
Load 50 ohm	Weinschel	0285	18/09/2017	18/09/2018
Stop Watch	RS Components	2674	13/07/2017	13/07/2018

TU – Traceability Unscheduled

Product Service

SECTION 4

PHOTOGRAPHS

4.1 PHOTOGRAPHS OF EQUIPMENT UNDER TEST (EUT)

EUT and GPS Antenna

Product Service

SECTION 5

ACCREDITATION, DSICLAIMERS AND COPYRIGHT

5.1 ACCREDITATION, DISCLAIMERS AND COPYRIGHT

This report relates only to the actual item/items tested.

Our UKAS Accreditation does not cover opinions and interpretations and any expressed are outside the scope of our UKAS Accreditation.

Results of tests not covered by our UKAS Accreditation Schedule are marked NUA (Not UKAS Accredited).

This report must not be reproduced, except in its entirety, without the written permission of TÜV SÜD Product Service

© 2018 TÜV SÜD Product Service

ANNEX A

MANUFACTURER SUPPLIED INFORMATION

EXCELLENCE IN RADIO TECHNOLOGIES
Safety • Navigation • Tracking

Weatherdock AG
Emmericher Str. 17
Nuremberg
Germany

To Whom It May Concern:

We declare, that:

our product "GARMIN AIS800" and "easyTRX3" has incorported the GNSS module "uBlox MAX-8".

This module uses the GPS-WGS84 as positioning system and these data are used for the AIS.

Please see attached data-sheet.

Contact person: Jürgen Zimmermann
Position in the company: CTO
Date of signatory: 18th May 2018

Signatory

Emmericher Straße 17
D-90411 Nürnberg
info@weatherdock.de

Visit us at:
www.easyais.com

Weatherdock AG
Emmericher Strasse 17
90411 Nürnberg
Tel. +49(0) 911 - 37663830
Fax +49(0) 911 - 37663840
info@weatherdock.de

Board of Directors: Alfred Kotouczek-Zeise (Chairman) | Wolfgang Werner | Jürgen Zimmermann
Supervisory Board: Frank Zimmermann (Chairman) | Ingrid Zeise | Johanna Werner
Bank: Oberbank Erlangen | Account No. 157 110 4015 | IBAN: DE 44 7012 0700 1571 1040 15 | BIC: OBKLDEMX
Registered: HRB 25498, Amtsgericht Nürnberg
Int. VAT-ID: DE232244562
German taxation number: 216/120/80108

COMMERCIAL-IN-CONFIDENCE

7.7 Geodetic Coordinate Systems and Ellipsoids

In order to have any useful meaning, the positions reported by a u-blox receiver must be referenced to some coordinate system which defines the origin and, for example, which way is "up". For many reasons, including history, practical autonomy and politics, all the major GNSS define their own theoretical coordinate systems from which they realize a practical reference frame by means of a network of reference points. Specifically:

- GPS uses WGS84
- GLONASS uses PZ90
- Galileo uses GTRF
- BeiDou uses CGCS2000

In practice, the relevant organisations choose to keep their respective frames very close to the International Terrestrial Reference Frame (ITRF), defined and managed by the International Earth Rotation and Reference Systems Service (IERS). However, because the Earth's tectonic plates and even parts of the Earth's core move, new versions of ITRF are defined every few years, generally with changes of the order of a few millimetres. Consequently, the major GNSS occasionally decide that they need to update their reference frames to be better aligned to the latest ITRF. So, for example, GPS switched to WGS84 (G1150) in GPS week 1150 (early 2002) based on ITRF2000, while GLONASS switched from PZ90.02 to PZ90.11 at the end of 2013, based on ITRF2008. The net effect of this, is that all the major GNSS use almost the same reference frame, but there are some small (generally sub-cm) differences between them and these differences occasionally change.

In order to produce positions that can be shown on a map, it is necessary to translate between raw coordinates (e.g. x, y, z) and a position relative to the Earth's surface (e.g. latitude, longitude and altitude) and that requires defining the form of ellipsoid that best matches the shape of the Earth. Historically many different ellipsoid definitions have been used for maps, many of which predate the existence of GNSS and show quite significant differences, leading to discrepencies of as much as 100m in places. Fortunately, most digital maps now use the WGS84 ellipsoid, which is distinct from the WGS84 coordinate system, but defined by the same body.

All u-blox receivers use (the current) version of WGS84 frame as their reference frame, carrying out any necessary corrections internally. What is more, by default, u-blox receivers use the WGS84 ellipsoid and therefore all positions communicated from/to a u-blox receiver will be relative to that. However, users can alter this by specifying their chosen geodetic datum parameters using the `UBX-CFG-DAT` message. The table below indicates the values u-blox recommends for use.

Recommended UBX-CFG-DAT parameters

Ellipsoid	*majA*	*flat*	*dX*	*dY*	*dZ*	*rotX*	*rotY*	*rotZ*
WGS84 (default)	6378137.0	298.257223563	0.0	0.0	0.0	0.0	0.0	0.0
PZ90	6378136.0	298.257839303	0.0	0.0	0.0	0.0	0.0	0.0
CGCS2000	6378137.0	298.257227101	0.0	0.0	0.0	0.0	0.0	0.0

Where the receiver is configured to use differential correction data (e.g. via an RTCM stream), as a direct consequence, the receiver's coordinate frame will switch to whatever frame the source of correction data is using.

8 Clocks and Time

8.1 Receiver Local Time

The receiver is dependent on a local oscillator (normally a TCXO or Crystal oscillator) for both the operation of its radio parts and also for timing within its signal processing. No matter what nominal frequency the local oscillator has (e.g. 26 MHz), u-blox receivers subdivide the oscillator signal to provide a 1 kHz reference clock

COMMERCIAL-IN-CONFIDENCE