AD-501AX

Antenna Approval Sheet

Part Number	R3410A10050
Product Number	AD-501AX
Description	Dipole Antenna, 3.7dBi/5dBi/5dBi 2.4G/5G/6GHz, RP-SMA(M) connector
DOC NO	

Ver. 1.1

Revised History

Version	Purpose	Date	Responsible
1.0	Initial DoC	2022/05/30	Christina
1.1	Revised p.2 Specification	2023/02/23	Christina

SparkLAN		Customer
Sales	**PM**	**Approval by**

AD-501AX

Wi-Fi 6/6E Triple Band External antenna

Features

- WiFi 6, including WiFi 6E new 6GHz band, Bluetooth, ZigBee
- Global Frequency coverage
- High efficiency
- Quick integration

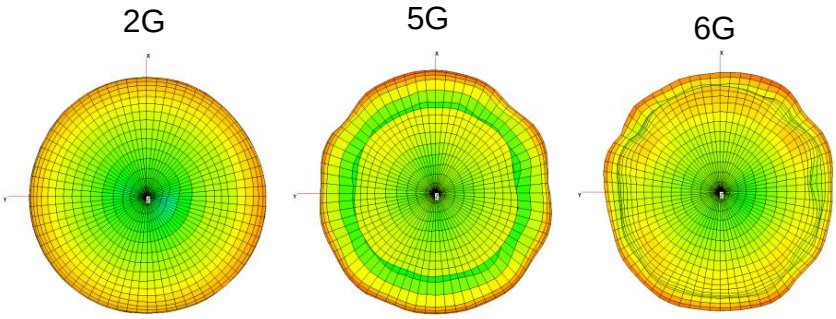

Specification

Frequency (MHz)	2400 ~ 2485	5150 ~ 5250	5250 ~ 5350	5470 ~ 5725	5725 ~ 5850	5850 ~ 5895	5925 ~ 6425	6425 ~ 6525	6525 ~ 6875	6875 ~ 7125
Peak Gain (dBi)	3.7	4.7	4.6	4.7	5	4.5	4.9	5	4.8	4.7
Average Gain(dB)	-2.0	-1.6	-1.3	-1.8	-1.9	-2.2	-2.2	-1.9	-1.8	-1.5
Efficiency	≧ 59 %	≧ 69 %					≧ 65 %			
VSWR	2.0:1									
Power	1 (Watts)									
Impedance	50 (Ohms)									
Dimension	162 x 22 x 13.6 (mm)									
Connector	RP-SMA Plug									
Color	Black									
Operating Temp (°C)	-40°C ~ +85°C									

Rev	Zone	Description	ENG	Approved	Date

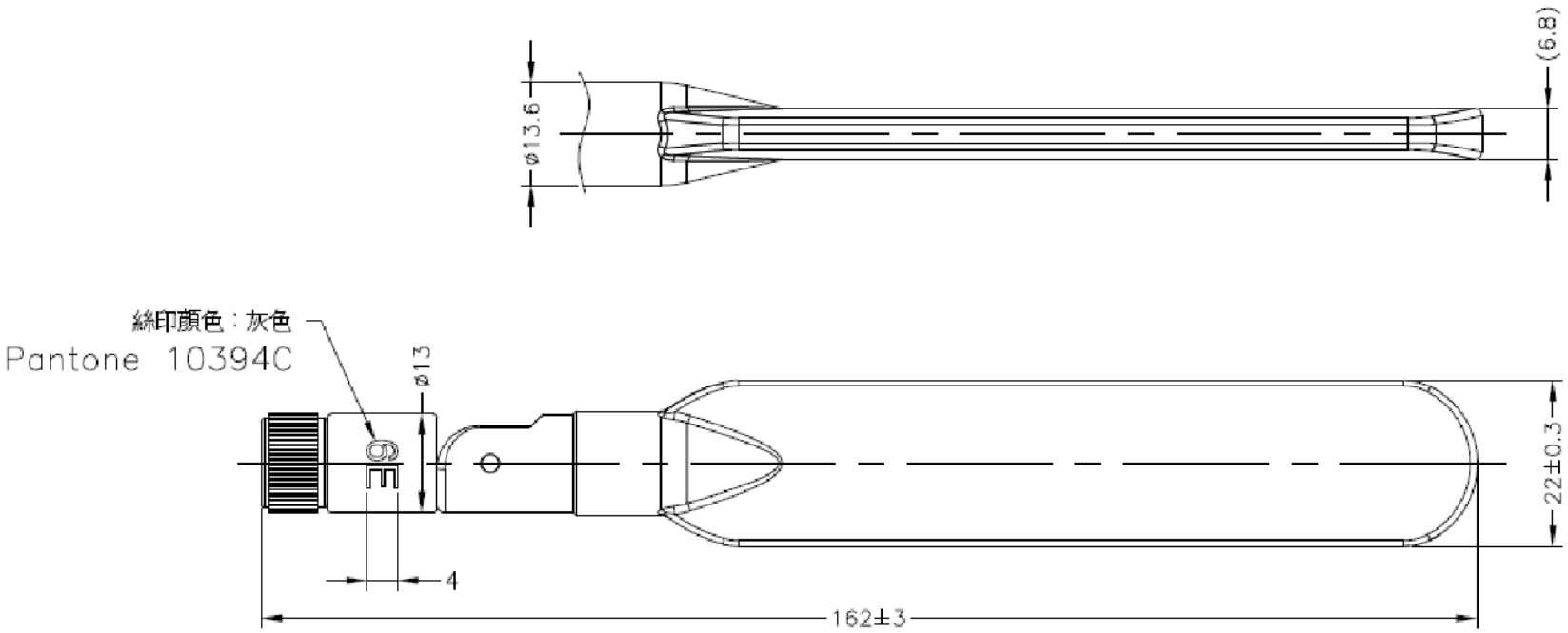

Remark:
1.Color: Black
2.Connector: RP-SMA Plug

TOLERANCE		CUSTOMER	PART NO.	DESCRIPTION:	DWG NO.	REV.
XXX.	±1.0	----	----	Antenna	ALX21X-121050-00	A0
XX.	±0.5	PROJECTION	UNIT	SCALE	SIZE	SHEET
X.	±0.3		mm	1:1	A4	1/1
.X	±0.1	APPROVED:	DESIGNED:	DRAWN:		
.XX	±0.05	-----	James	Anna		

No.	Description	Specification	Qty
3			
2			
1			

SparkLAN

包裝規範書

產品名稱	AD-501AX	客戶名稱		版次	A
產品料號	R3410A10050	客戶料號		製作日期	2022/5/30

產品包裝說明

一、包裝：
(1)將10pcs產品裝入排袋，不封口
(2)在紙箱內放入1pcs防水袋，將50排袋產品裝入大PE袋內部並貼上一張內標籤
(3)外箱側嗲右上角貼1pcs/外箱標籤
外箱標籤旁邊需貼1pcs/ROHS標籤

二、裝箱：
外箱尺寸350 x 250 x 260mm
每箱50排袋，合計500pcs

註:
以實際裝箱數量為準

產品包裝圖示

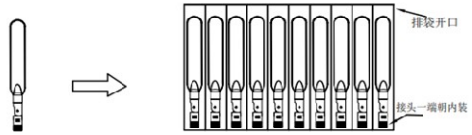

图1. 1PCS产品

每排袋/10PCS；
注意：装袋时天线杆套一端朝排袋开口处，
接头一端朝内；不封口

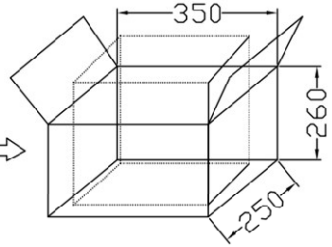

在纸箱内放入1PCS防水袋，
将50排袋产品装入纸箱，合计产品500PCS
在防水袋上贴一张内标签。

内外标签内容说明：
1. Company: SparkLAN Communications, inc.
2. Model Name: AD-501AX
3. Description: Dipole Antenna, 3.7dBi/5dBi/5dBi
2.4G/5G/6GHz, RP-SMA(M) coonector
4. Part NO: R3410A10050
5. Q'TY: 500 PCS（内外箱包装数量列印时自行修改）

Company	SparkLAN Communications, inc.
Model Name	AD-501AX
Description	Dipole Antenna, 3.7dBi/5dBi/5dBi 2.4G/5G/6GHz, RP-SMA(M) coonector
Part NO	R3410A10050
Q'TY	500 PCS

内袋标签

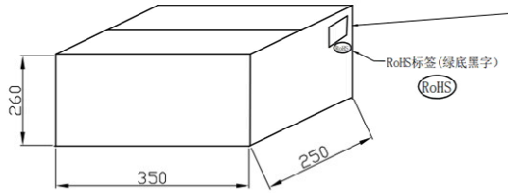

外箱侧麦右上角贴1PCS/外箱标签;
外箱标签旁边需贴1PCS/ROHS标签.

Company	SparkLAN Communications, inc.
Model Name	AD-501AX
Description	Dipole Antenna, 3.7dBi/5dBi/5dBi 2.4G/5G/6GHz, RP-SMA(M) coonector
Part NO	R3410A10050
Q'TY	500 PCS

外箱标签