正基科技股份有限公司

SPECIFICATION

PRODUCT NAME： AP6256

REVISION： 3.3

DATE： Sept. 01st, 2023

Customer APPROVED	
Company	
Representative Signature	

PREPARED	REVIEW			APPROVED	DCC ISSUE
	PM	QA	ET		

正基科技股份有限公司

AMPAK Technology Inc.

AP6256

Data Sheet

Address:
8F, No.15-1 Zhonghua Road,Hsinchu Industrial Park, Hukou,
Hsinchu,Taiwan, 30352
http://www.ampak.com.tw

Revision

Revision	Date	Description	Revised By
1.0	2017 / 06 / 13	- Preliminary	Richard
1.1	2017 / 09 / 07	- Modify WLAN Specification	Harry
1.2	2017 / 12 / 15	- Modify WLAN/BT Specification	Harry
1.3	2017 / 12 / 20	- Modify WLAN/BT Specification	Harry
1.4	2018 / 08 / 03	- Modify Overview block diagram / General Specification Dimension	Harry
1.5	2018 / 10 / 03	- Modify Bluetooth Specification & format	Harry
1.6	2018 / 12 / 12	- Modify 2.2.2 Voltages/ add PCM & UART Interface Description Timing Diagram Spec	Harry
1.7	2018 / 12 / 28	- Modify 2.2.1 Absolute Maximum Ratings VBAT MAX / ADD ESD Condition	Harry
1.8	2019 / 01 / 08	- Modify 6. Dimensions pin45,46,47 diameter	Harry
1.9	2019 / 03 / 25	- Modify version number C-RD-047D	Harry
2.0	2019 / 09 / 19	- Modify Layout recommended Footprint - Modify Package Information	Richard
2.1	2019 / 09 / 24	- Modify Module Dimensions	Richard
2.2	2019 / 12 / 13	- Modify Bluetooth Specification	Richard
2.5	2020 /03 /02	- Modify 5GHz RF Specification	Ali
2.6	2021 /01 /12	- Modify recommended Footprint	Eason
2.7	2021 /07 /05	- Update Bluetooth Specification	Richard
2.8	2021 /07 /15	- Modify Physical Dimension	Richard
2.9	2022 /08 /17	- Recommended Operating Rating	Ali
3.0	2023 /03 /08	- Modify Bluetooth Specification	Ali
3.1	2023 /06 /29	- Modify UART & PCM Interface description	Ali
3.2	2023 /08 /14	- General Specification	Ali
3.3	2023 /09 /01	- add 37.4MHz crystal recommended specification	Ali

Contents

1. Introduction 2
1.1 Overview 2
1.2 Product Features 3
2. General Specification 4
2.1 General Specification 4
2.2 DC Characteristics 4
2.2.1 Absolute Maximum Ratings 4
2.2.2 Recommended Operating Rating 5
3. Wi-Fi RF Specification 6
3.1 2.4GHz RF Specification 6
3.2 5GHz RF Specification 8
4. Bluetooth Specification 11
4.1 Bluetooth Specification 11
5. Pin Definition 12
5.1 Pin Outline 12
5.2 Pin Assignment 13
6. Dimensions 15
6.1 Module Dimensions 15
6.2 Recommended Footprint 16
7. External clock reference 17
8. Host Interface Timing Diagram 18
8.1 Power-up Sequence Timing Diagram 18
8.2 SDIO Interface Description 20
8.3 PCM Interface Description 27
8.4 UART Interface Description 33
9. Recommended Reflow Profile 35
10. Package Information 36
10.1 Label 36
10.2 Dimension 37
10.3 MSL Level / Storage Condition 39

1. Introduction

1.1 Overview

The AMPAK Technology® AP6256 is a fully Wi-Fi and Bluetooth functionalities module with seamless roaming capabilities and advance security, also it could interact with different vendors' 802.11a/b/g/n/ac 1x1 Access Points with SISO standard and can accomplish up to speed of 433.3Mbps with single stream in 802.11ac to connect the wireless LAN. Furthermore AP6256 included SDIO interface for Wi-Fi, UART/ PCM interface for Bluetooth.

In addition, this compact module is a total solution for a combination of Wi-Fi + BT technologies. The module is specifically developed for tablet, OTT box and portable devices.

AMPAK Technology Inc.
8F, No.15-1 Zhonghua Road, Hsinchu Industrial Park, Hukou, Hsinchu, Taiwan, 30352
http://www.ampak.com.tw

1.2 Product Features

- Lead Free design which is compliant with ROHS requirements.
- TX and RX low-density parity check (LDPC) support for improved range and power efficiency.
- Single-stream spatial multiplexing up to 433.3 Mbps data rate.
- 20, 40, 80 MHz channels with optional SGI (256 QAM modulation)
- Supports 1antenna with one for WLAN & Bluetooth shared port. Also, shared Bluetooth and WLAN receive signal path eliminates the need for an external power splitter while maintaining excellent sensitivity for both Bluetooth and WLAN.
    - Supports standard SDIO v3.0, compatible with SDIO v2.0 HOST interfaces.

- BT host digital interface:
    - HCI UART (up to 4 Mbps)
    - PCM for audio data
- Complies with Bluetooth Core Specification Version 5.2 with provisions for supporting future specifications. With Bluetooth Class 1 or Class2 transmitter operation.
- Supports extended synchronous connections (eSCO), for enhanced voice quality by allowing for retransmission of dropped packets.
- Adaptive frequency hopping (AFH) for reducing radio frequency interference.

A simplified block diagram of the module is depicted in the figure above.

AMPAK Technology Inc.
8F, No.15-1 Zhonghua Road, Hsinchu Industrial Park, Hukou, Hsinchu, Taiwan, 30352
http://www.ampak.com.tw

2. General Specification

2.1 General Specification

Model Name	AP6256
Product Description	1Tx/1Rx 802.11 ac/a/b/g/n Wi-Fi + BT 5.2 Module
Dimension[note 2]	L x W: 12 x 12(Typ.)mm、H : 1.65 (Max.) mm (with shielding cover)
Wi-Fi Interface	SDIO V3.0/ 2.0
BT Interface	UART / PCM
Operating temperature[note 1]	-30°C to 85°C
Storage temperature	-40°C to 125°C
Humidity	Operating Humidity : 0 to 100% Non-Condensing

Note 1: The optimal RF performance specified in the data sheet, however, is guaranteed only -20 °C to +75 °C and 3.2V < VBAT < 4.4V without derating performance.

Note 2: The Dimension = L x W: 12 x 12(Typ.)mm、H : 1.37 (Max.) mm (without the shielding cover)

2.2 DC Characteristics

2.2.1 Absolute Maximum Ratings

Symbol	Description	Min.	Max.	Unit
VBAT	Input supply Voltage	-0.5	5	V
VDDIO	Digital/Bluetooth/SDIO/ I/O Voltage	-0.5	3.9	V

Extreme caution must be exercised to prevent electrostatic discharge (ESD) damage.

Symbol	Condition	Minimum ESD Rating	Unit
ESD_HAND_HBM	Human body model contact discharge per JEDEC EID/JESD22-A114	1	kV
ESD_HAND_CDM	Charged device model contact discharge per JEDEC EIA/JESD22-C101	250	V

AMPAK Technology Inc.
8F, No.15-1 Zhonghua Road, Hsinchu Industrial Park, Hukou, Hsinchu, Taiwan, 30352
http://www.ampak.com.tw

2.2.2 Recommended Operating Rating

The module requires two power supplies: VBAT and VDDIO.

Voltage rails	Min.	Typ.	Max.	Unit
VBAT note 3	3.0	3.3	4.4	V
VDDIO	1.6	1.8 / 3.3	3.6	V

VBAT current consumption 1A (Peak), when VBAT = 3.3V

Note 3: The optimal RF performance specified in the data sheet, however, is guaranteed only -20 °C to +75 °C and 3.2V < VBAT < 4.4V without derating performance.

The module requires two power supplies: other Digital I/O Pins.

For VDDIO=1.8V	Min.	Max.	Unit
VIL/VIH	0.35×VDDIO	0.65×VDDIO	V
VOL/VOH output@2mA	0.4	VDDIO-0.4	V
For VDDIO=3.3V	**Min.**	**Max.**	**Unit**
VIL/VIH	0.80	2	V
VOL/VOH output@2mA	0.4	VDDIO-0.4	V

AMPAK Technology Inc.
8F, No.15-1 Zhonghua Road, Hsinchu Industrial Park, Hukou, Hsinchu, Taiwan, 30352
http://www.ampak.com.tw

3. Wi-Fi RF Specification

3.1 2.4GHz RF Specification

Conditions : VBAT=3.3V ; VDDIO=3.3V ; Temp:25°C

Feature	Description
WLAN Standard	IEEE 802.11b/g/n & Wi-Fi compliant
Frequency Range	2.400 GHz ~ 2.4835 GHz (2.4GHz ISM Band)
Number of Channels	2.4GHz： Ch1 ~ Ch13
Modulation	802.11b : DQPSK、DBPSK、CCK 802.11 g/n : OFDM /64-QAM、16-QAM、QPSK、BPSK

Output Power , tolerance ± 1.5 dB

The transmit EVM quality & spectrum mask are compliant with IEEE 802.11 standard

802.11b	**1Mbps**	**2Mbps**	**5.5Mbps**	**11Mbps**	
	17	17	17	17	
802.11g	**6、9Mbps**	**12、18Mbps**	**24Mbps**	**36Mbps**	**48Mbps**
	16	16	16	16	15
	54Mbps				
	15				
802.11n 20MHz	**MCS0~2**	**MCS3**	**MCS4**	**MCS5**	**MCS6**
	17	17	16	15	14
	MCS7				
	14				

Note： The specifications of RF output power are subject to change to fulfill the safety regulation and requirements in end-user product.

Sensitivity, tolerance ± 2 dB

CCK modulation PER ≦ 8%、OFDM modulation PER ≦ 10%

802.11b	**Data Rate**	**Spec.(dBm)**		
	1Mbps	-96		
	2Mbps	-90		
	5.5Mbps	-88		
	11Mbps	-87		
802.11g	**Data Rate**	**Spec.(dBm)**	**Data Rate**	**Spec.(dBm)**
	6Mbps	-91	**24Mbps**	-83
	9Mbps	-88	**36Mbps**	-80
	12Mbps	-87	**48Mbps**	-76

AMPAK Technology Inc.
8F, No.15-1 Zhonghua Road, Hsinchu Industrial Park, Hukou, Hsinchu, Taiwan, 30352
http://www.ampak.com.tw

	18Mbps	-85	**54Mbps**	-73
802.11n_20MHz	**Data Rate**	**Spec.(dBm)**	**Data Rate**	**Spec.(dBm)**
	MCS0	-90	**MCS4**	-77
	MCS1	-85	**MCS4**	-75
	MCS2	-84	**MCS6**	-72
	MCS3	-80	**MCS7**	-71
Maximum Input Level	802.11b : -10 dBm			
	802.11g/n : -20 dBm			

AMPAK Technology Inc.
8F, No.15-1 Zhonghua Road, Hsinchu Industrial Park, Hukou, Hsinchu, Taiwan, 30352
http://www.ampak.com.tw

3.2 5GHz RF Specification

Conditions : VBAT=3.3V ; VDDIO=3.3V ; Temp:25°C

Feature	Description
WLAN Standard	IEEE 802.11a/n/ac & Wi-Fi compliant
Frequency Range	5.15~5.35GHz、5.47~5.725GHz、5.725~5.85GHz (5GHz UNII Band)
Number of Channels	5.18~5.35GHz：Ch36 ~ Ch64 5.5~5.72GHz：Ch100 ~ Ch144 5.745~5.825GHz：Ch149 ~ Ch165
Modulation	802.11a : OFDM /64-QAM、16-QAM、QPSK、BPSK 802.11n : OFDM /64-QAM、16-QAM、QPSK、BPSK 802.11ac : OFDM /256-QAM、OFDM /64-QAM、16-QAM、QPSK、BPSK

Output Power , tolerance ± 2 dB

The transmit EVM quality & spectrum mask are compliant with IEEE 802.11 standard

802.11a	**Frequency (MHz)**	**6~9Mbps**	**12~18Mbps**	**24Mbps**	**36Mbps**
	5180~5350	17	17	17	16
	5500~5720	17	17	17	16
	5745~5825	17	17	17	16
	Frequency (MHz)	**48Mbps**	**54Mbps**		
	5180~5350	16	15		
	5500~5720	16	15		
	5745~5825	16	15		
802.11n 20MHz	**Frequency (MHz)**	**MCS0~2**	**MCS3**	**MCS4**	**MCS5**
	5180~5350	17	17	16	16
	5500~5720	17	17	16	16
	5745~5825	17	17	16	16
	Frequency (MHz)	**MCS6**	**MCS7**		
	5180~5350	15	14		
	5500~5720	15	14		
	5745~5825	15	14		
802.11n 40MHz	**Frequency (MHz)**	**MCS0~2**	**MCS3**	**MCS4**	**MCS5**
	5180~5350	17	17	16	16
	5500~5720	17	17	16	16
	5745~5825	17	17	16	16
	Frequency (MHz)	**MCS6**	**MCS7**		

AMPAK Technology Inc.
8F, No.15-1 Zhonghua Road, Hsinchu Industrial Park, Hukou, Hsinchu, Taiwan, 30352
http://www.ampak.com.tw

	5180~5350	15	14		
	5500~5720	15	14		
	5745~5825	15	14		
802.11ac 20MHz	Frequency (MHz)	MCS0~2	MCS3	MCS4	MCS5
	5180~5350	17	17	16	16
	5500~5720	17	17	16	16
	5745~5825	17	17	16	16
	Frequency (MHz)	MCS6	MCS7	MCS8	
	5180~5350	15	14	12	
	5500~5720	15	14	12	
	5745~5825	15	14	12	
802.11ac 40MHz	Frequency (MHz)	MCS0~2	MCS3	MCS4	MCS5
	5180~5350	17	17	16	16
	5500~5720	17	17	16	16
	5745~5825	17	17	16	16
	Frequency (MHz)	MCS6	MCS7	MCS8	MCS9
	5180~5350	15	14	12	10.5
	5500~5720	15	14	12	10.5
	5745~5825	15	14	12	10.5
802.11ac 80MHz	Frequency (MHz)	MCS0~2	MCS3	MCS4	MCS5
	5180~5350	17	17	16	16
	5500~5720	17	17	16	16
	5745~5825	17	17	16	16
	Frequency (MHz)	MCS6	MCS7	MCS8	MCS9
	5180~5350	15	14	12	10.5
	5500~5720	15	14	12	10.5
	5745~5825	15	14	12	10.5

Note：The specifications of RF output power are subject to change to fulfill the safety regulation and requirements in end-user product.

Sensitivity, tolerance ± 2 dB

OFDM modulation PER ≦ 10%

	Data Rate	Spec.(dBm)	Data Rate	Spec.(dBm)
802.11a	6Mbps	-92	24Mbps	-82
	9Mbps	-89	36Mbps	-79
	12Mbps	-88	48Mbps	-75
	18Mbps	-86	54Mbps	-74

AMPAK Technology Inc.
8F, No.15-1 Zhonghua Road, Hsinchu Industrial Park, Hukou, Hsinchu, Taiwan, 30352
http://www.ampak.com.tw

802.11n_20MHz	Data Rate	Spec.(dBm)	Data Rate	Spec.(dBm)
	MCS0	-91	MCS4	-78
	MCS1	-88	MCS5	-74
	MCS2	-85	MCS6	-73
	MCS3	-82	MCS7	-72
802.11n_40MHz	Data Rate	Spec.(dBm)	Data Rate	Spec.(dBm)
	MCS0	-89	MCS4	-76
	MCS1	-85	MCS5	-71
	MCS2	-83	MCS6	-70
	MCS3	-79	MCS7	-68
802.11ac_20MHz	Data Rate	Spec.(dBm)	Data Rate	Spec.(dBm)
	MCS0	-90	MCS5	-73
	MCS1	-87	MCS6	-71
	MCS2	-84	MCS7	-70
	MCS3	-81	MCS8	-67
	MCS4	-77		
802.11ac_40MHz	Data Rate	Spec.(dBm)	Data Rate	Spec.(dBm)
	MCS0	-88	MCS5	-70
	MCS1	-83	MCS6	-68
	MCS2	-81	MCS7	-66
	MCS3	-78	MCS8	-65
	MCS4	-75	MCS9	-63
802.11ac_80MHz	Data Rate	Spec.(dBm)	Data Rate	Spec.(dBm)
	MCS0	-85	MCS5	-69
	MCS1	-82	MCS6	-65
	MCS2	-78	MCS7	-63
	MCS3	-74	MCS8	-61
	MCS4	-71	MCS9	-60
Maximum Input Level	802.11a/n : -20 dBm			
	802.11ac : -30 dBm			

AMPAK Technology Inc.
8F, No.15-1 Zhonghua Road, Hsinchu Industrial Park, Hukou, Hsinchu, Taiwan, 30352
http://www.ampak.com.tw

4. Bluetooth Specification

4.1 Bluetooth Specification

Conditions : VBAT=3.3V ; VDDIO=3.3V ; Temp:25°C

Feature	**Description**	
General Specification		
Bluetooth Standard	BDR(1Mbps)、EDR(2、3Mbps)、LE(1Mbps、2Mbps)	
Host Interface	UART	
Frequency Band	2402 MHz ~ 2480 MHz	
Number of Channels	79 channels for classic、40 channels for BLE	
Modulation	GFSK, π/4-DQPSK, 8DPSK	
RF Specification		
	CL1 (dBm)	**CL2** (dBm)
BDR Output Power	6	2
EDR Output Power	4	2
LE Output Power	5	2
	Typical.	
Sensitivity @ BER=0.1% for GFSK (1Mbps)	-88 dBm	
Sensitivity @ BER=0.01% for π/4-DQPSK (2Mbps)	-88 dBm	
Sensitivity @ BER=0.01% for 8DPSK (3Mbps)	-85 dBm	
Sensitivity @ PER=30.8% for LE (1Mbps)	-90 dBm	
Sensitivity @ PER=30.8% for LE (2Mbps)	-90 dBm	
Maximum Input Level	GFSK (1Mbps):-20dBm	
	π/4-DQPSK (2Mbps) :-20dBm	
	8DPSK (3Mbps) :-20dBm	

Note*： The Bluetooth output power is able to be configured by firmware (hcd file).

AMPAK Technology Inc.
8F, No.15-1 Zhonghua Road, Hsinchu Industrial Park, Hukou, Hsinchu, Taiwan, 30352
http://www.ampak.com.tw

5. Pin Definition

5.1 Pin Outline

<TOP VIEW>

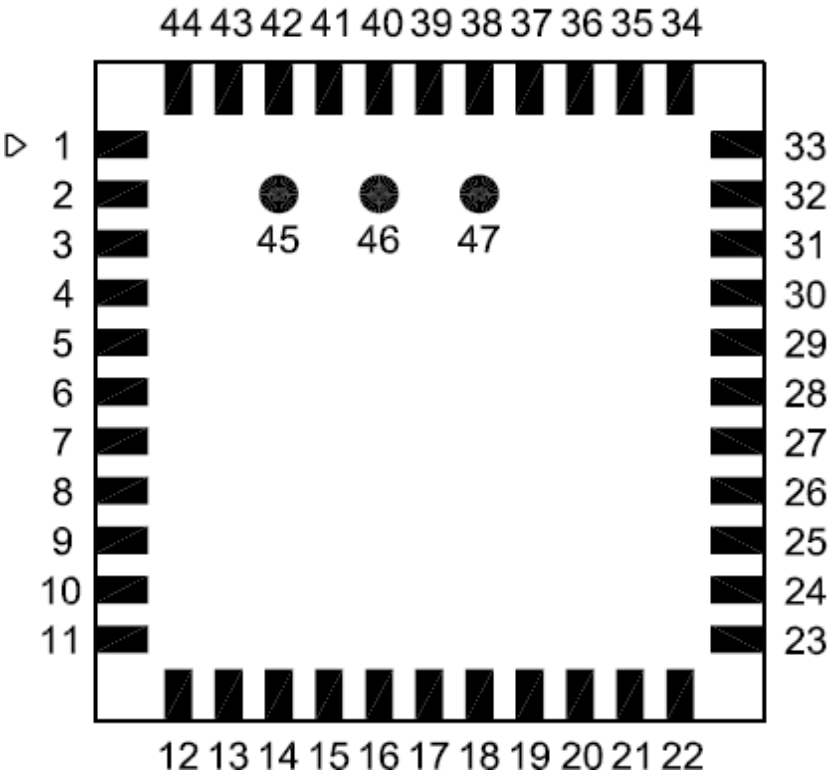

AMPAK Technology Inc.
8F, No.15-1 Zhonghua Road, Hsinchu Industrial Park, Hukou, Hsinchu, Taiwan, 30352
http://www.ampak.com.tw

5.2 Pin Assignment

NO	Name	Type	Description
1	GND	—	Ground connections
2	WL_BT_ANT	I/O	RF I/O port
3	GND	—	Ground connections
4	NC	—	Floating (Don't connected to ground)
5	NC	—	Floating (Don't connected to ground)
6	BT_WAKE	I	HOST wake-up Bluetooth device
7	BT_HOST_WAKE	O	Bluetooth device to wake-up HOST
8	NC	—	Floating (Don't connected to ground)
9	VBAT	P	Main power voltage source input
10	XTAL_IN	I	Crystal input
11	XTAL_OUT	O	Crystal output
12	WL_REG_ON	I	Power up/down internal regulators used by WiFi section
13	WL_HOST_WAKE	O	WLAN to wake-up HOST
14	SDIO_DATA_2	I/O	SDIO data line 2
15	SDIO_DATA_3	I/O	SDIO data line 3
16	SDIO_DATA_CMD	I/O	SDIO command line
17	SDIO_DATA_CLK	I/O	SDIO clock line
18	SDIO_DATA_0	I/O	SDIO data line 0
19	SDIO_DATA_1	I/O	SDIO data line 1
20	GND	—	Ground connections
21	VIN_LDO_OUT	P	Internal Buck voltage generation pin
22	VDDIO	P	I/O Voltage supply input
23	VIN_LDO	P	Internal Buck voltage generation pin
24	LPO	I	External Low Power Clock input (32.768KHz)
25	PCM_OUT	O	PCM Data output
26	PCM_CLK	I/O	PCM clock
27	PCM_IN	I	PCM data input
28	PCM_SYNC	I/O	PCM sync signal
29	SDIO_VSEL	I	SDIO mode selection pin 1：When VDDIO=1.8V , 0：When VDDIO=3.3V
30	NC	—	Floating (Don't connected to ground)
31	GND	—	Ground connections

AMPAK Technology Inc.
8F, No.15-1 Zhonghua Road, Hsinchu Industrial Park, Hukou, Hsinchu, Taiwan, 30352
http://www.ampak.com.tw

32	NC	—	Floating (Don't connected to ground)
33	GND	—	Ground connections
34	BT_REG_ON	I	Power up/down internal regulators used by BT section
35	NC	—	Floating (Don't connected to ground)
36	GND	—	Ground connections
37	GPIO_6	I/O	GPIO configuration pin
38	GPIO_3	I/O	GPIO configuration pin
39	GPIO_5	I/O	GPIO configuration pin
40	GPIO_2	I/O	GPIO configuration pin
41	UART_RTS_N	O	Bluetooth UART interface
42	UART_TXD	O	Bluetooth UART interface
43	UART_RXD	I	Bluetooth UART interface
44	UART_CTS_N	I	Bluetooth UART interface
45	TP1(NC)	—	Floating (Don't connected to ground)
46	TP2(NC)	—	Floating (Don't connected to ground)
47	TP3(NC)	—	Floating (Don't connected to ground)

AMPAK Technology Inc.
8F, No.15-1 Zhonghua Road, Hsinchu Industrial Park, Hukou, Hsinchu, Taiwan, 30352
http://www.ampak.com.tw

6. Dimensions

6.1 Module Dimensions

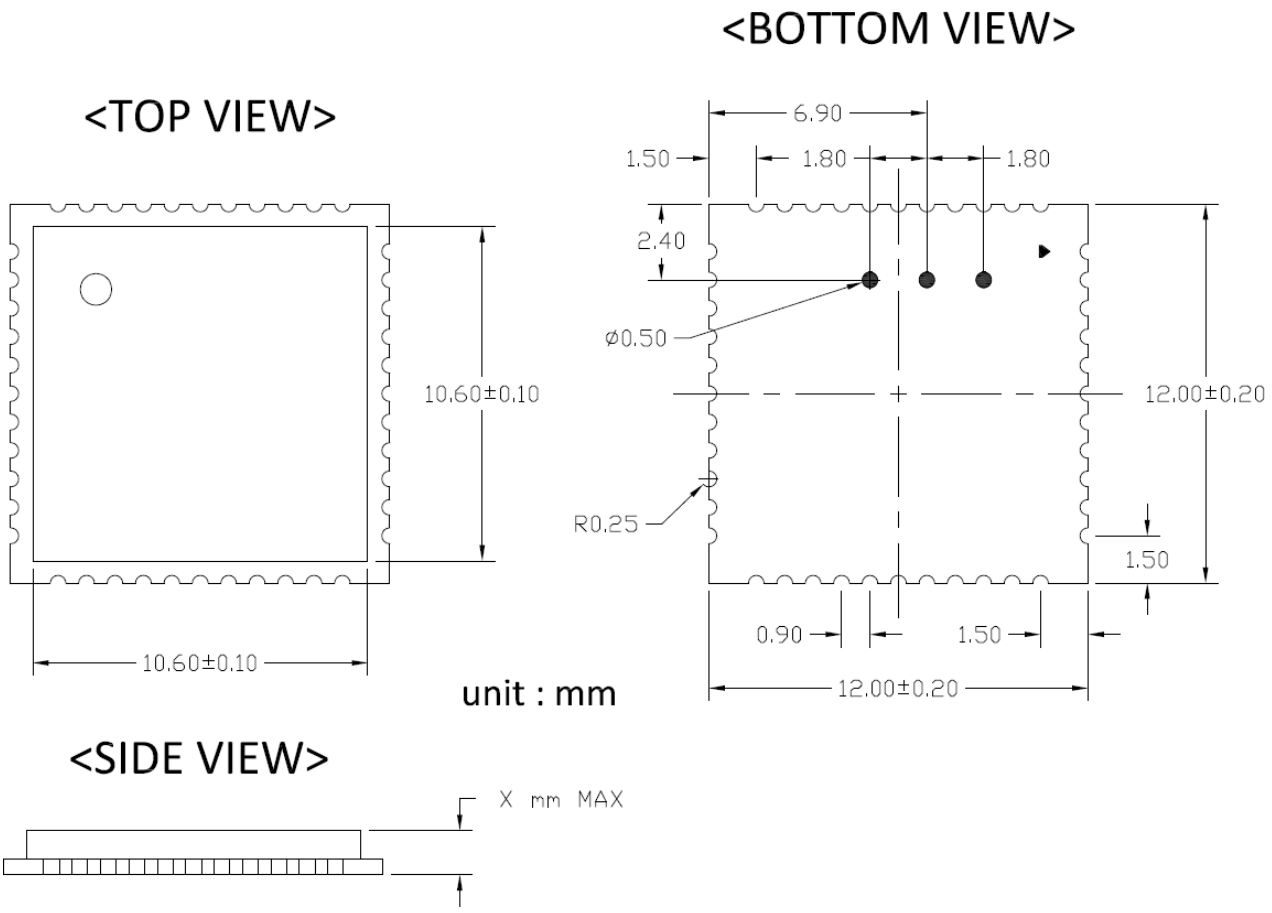

X = 1.65mm

AMPAK Technology Inc.
8F, No.15-1 Zhonghua Road, Hsinchu Industrial Park, Hukou, Hsinchu, Taiwan, 30352
http://www.ampak.com.tw

6.2 Recommended Footprint

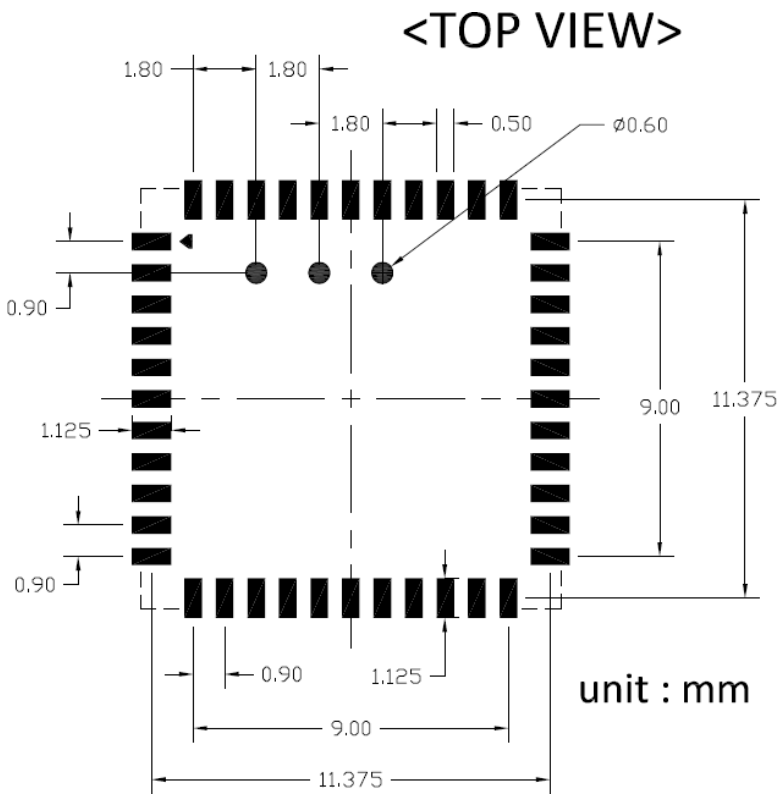

- Solder paste layer design is generally the same as recommended footprint.
  (錫膏層設計通常建議和焊墊尺寸相同)
- If soldering quality with good wetting on upright side is essential for PQC, how to optimize the aperture design in the stencil to adjust the amount of solder paste would be crucial.
  In addition, a kind of stencil design with stepped thickness in partial area would be considered if the thickness of stencil is about 0.1mm or thinner. Please optimize the stencil design by manufacture engineer or contact AMPAK FAE for assistance.
  (如果模組吃錫品質考量側面爬錫，如何優化鋼網開孔設計以調整適當的錫膏量是非常重要的。尤其鋼網的厚度大約是 0.1mm 或更薄時，可考慮局部加厚鋼網的設計。請諮詢製程工程師以優化鋼網的設計,或是聯絡正基科技技術支持團隊).

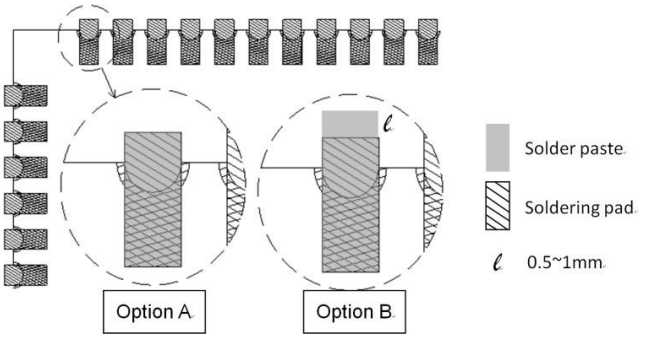

AMPAK Technology Inc.
8F, No.15-1 Zhonghua Road, Hsinchu Industrial Park, Hukou, Hsinchu, Taiwan, 30352
http://www.ampak.com.tw

7. External clock reference

External LPO signal characteristics

Parameter	Specification	Units
Nominal input frequency	32.768	kHz
Frequency accuracy	+/-30	ppm
Duty cycle	30 - 70	%
Input signal amplitude	400 to 3300	mV, p-p
Signal type	Square-wave or sine-wave	-
Input impedance	>100k <5	Ω pF
Clock jitter (integrated over 300Hz – 15KHz)	<1	Hz
Output high voltage	0.7Vio - Vio	V

Input signal amplitude follow VDDIO (1.8V or 3.3V)

External 37.4MHz X'TAL characteristics

Parameter	Specification	Units
Nominal frequency - F0	37.4	MHz
Frequency Tolerance - ΔF / F0 (At 25℃ +/- 3℃)	+/- 10	ppm
Operation Temperature Range - Topr	-30 ~ + 85	℃
Freq. Stability(over operating temperature) - TC Ref. to 25℃	+/- 10	ppm
Load capacitance - CL	18	pF
Equivalent Series Resistance – ESR	Max. 60	Ω
Drive Level - DL	Typ. 50, Max. 100	uW
Insulation resistance – IR At 100Vdc	Min. 500	MΩ

AMPAK Technology Inc.
8F, No.15-1 Zhonghua Road, Hsinchu Industrial Park, Hukou, Hsinchu, Taiwan, 30352
http://www.ampak.com.tw

8. Host Interface Timing Diagram

8.1 Power-up Sequence Timing Diagram

The module has signals that allow the host to control power consumption by enabling or disabling the Bluetooth, WLAN and internal regulator blocks. These signals are described below.

Additionally, diagrams are provided to indicate proper sequencing of the signals for carious operating states. The timing value indicated are minimum required values: longer delays are also acceptable.

- WL_REG_ON: Used by the PMU to power up or power down the internal regulators used by the WLAN section. When this pin is high, the regulators are enabled and the WLAN section is out of reset. When this pin is low the WLAN section is in reset.
- BT_REG_ON: Used by the PMU to power up or power down the internal regulators used by the BT section. Low asserting reset for Bluetooth. This pin has no effect on WLAN and does not control any PMU functions. This pin must be driven high or low (not left floating).

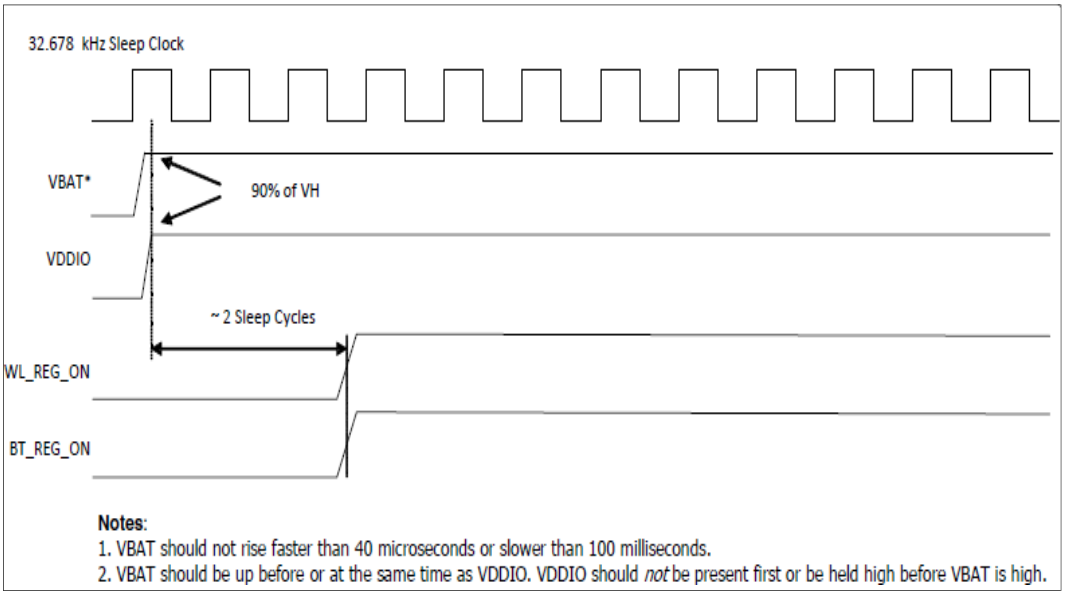

WLAN=ON, Bluetooth=ON

AMPAK Technology Inc.
8F, No.15-1 Zhonghua Road, Hsinchu Industrial Park, Hukou, Hsinchu, Taiwan, 30352
http://www.ampak.com.tw

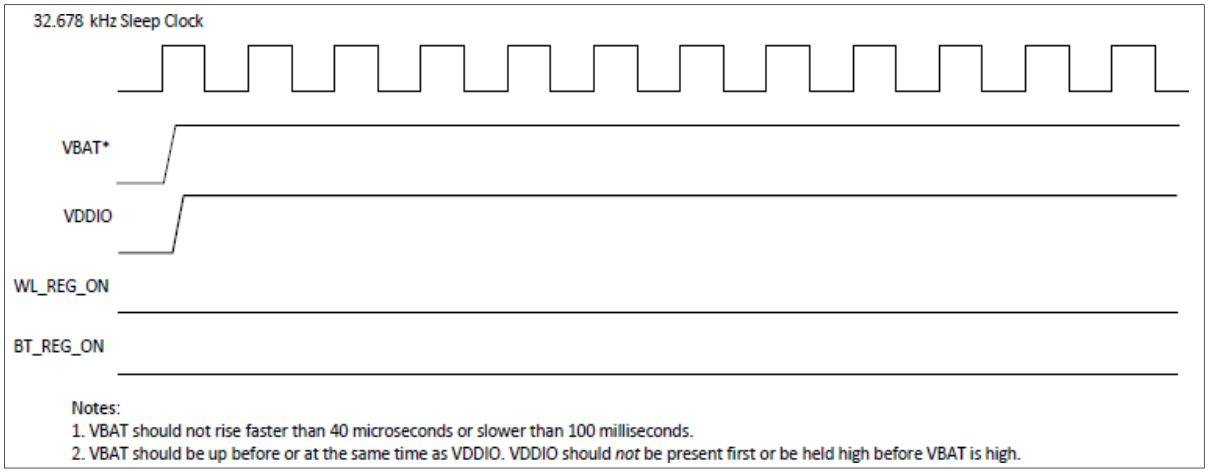

WLAN=OFF, Bluetooth=OFF

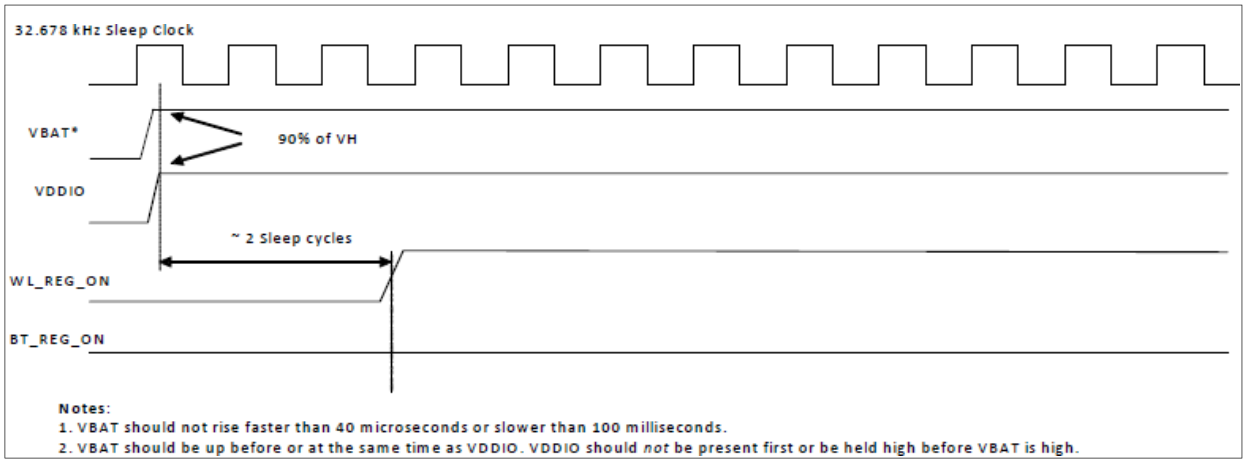

WLAN=ON, Bluetooth=OFF

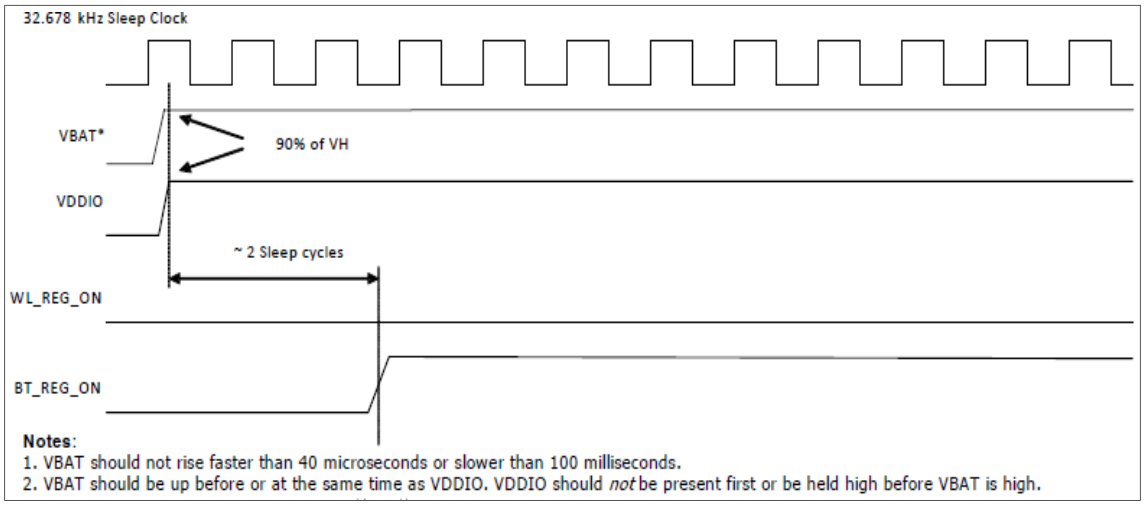

WLAN=OFF, Bluetooth=ON

AMPAK Technology Inc.
8F, No.15-1 Zhonghua Road, Hsinchu Industrial Park, Hukou, Hsinchu, Taiwan, 30352
http://www.ampak.com.tw

8.2 SDIO Interface Description

The module supports SDIO version 3.0 for all 1.8V 4-bit UHSI speeds: SDR50(100 Mbps),SDR104(208MHz) and DDR50(50MHz, dual rates) in addition to the 3.3V default speed(25MHz) and high speed (50 MHz). It has the ability to stop the SDIO clock and map the interrupt signal into a GPIO pin. This 'out-of-band' interrupt signal notifies the host when the WLAN device wants to turn on the SDIO interface. The ability to force the control of the gated clocks from within the WLAN chip is also provided.

- Function 0 Standard SDIO function (Max Block Size / Byte Count = 32B)
- Function 1 Backplane Function to access the internal System On Chip (SOC) address space (Max Block Size / Byte Count = 64B)
- Function 2 WLAN Function for efficient WLAN packet transfer through DMA (Max Block Size/Byte Count=512B)

SDIO Pin Description

SD 4-Bit Mode	
DATA0	Data Line 0
DATA1	Data Line 1 or Interrupt
DATA2	Data Line 2 or Read Wait
DATA3	Data Line 3
CLK	Clock
CMD	Command Line

AMPAK Technology Inc.
8F, No.15-1 Zhonghua Road, Hsinchu Industrial Park, Hukou, Hsinchu, Taiwan, 30352
http://www.ampak.com.tw

SDIO Default Mode Timing Diagram

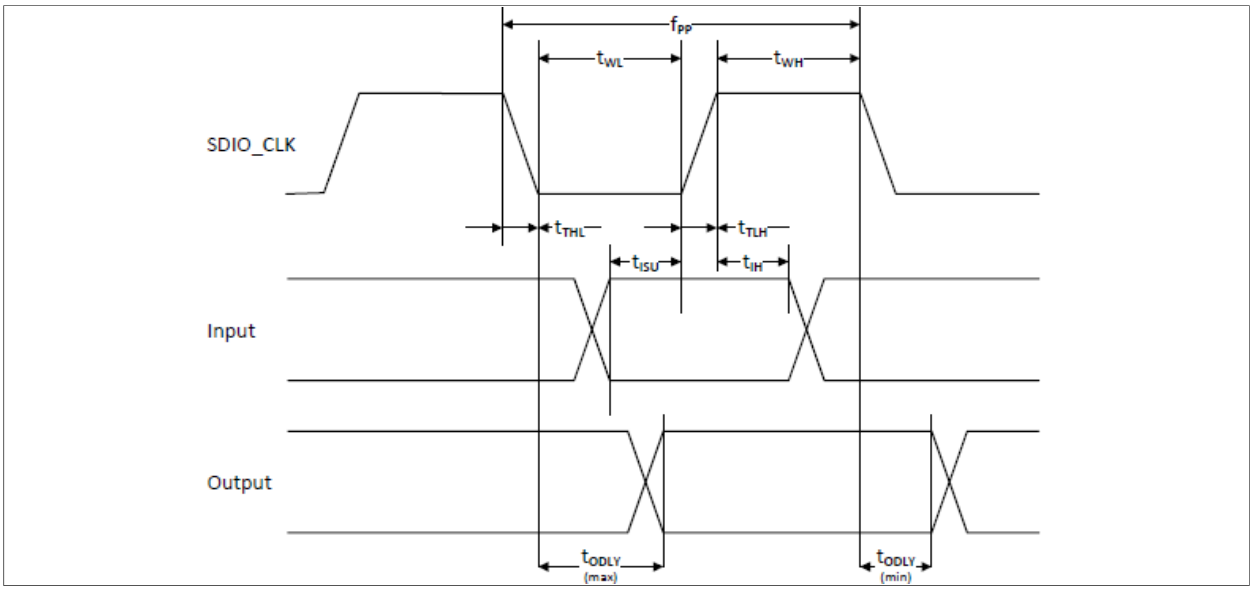

Parameter	Symbol	Minimum	Typical	Maximum	Unit
SDIO CLK (All values are referred to minimum VIH and maximum VIL[b])					
Frequency – Data Transfer mode	fPP	0	–	25	MHz
Frequency – Identification mode	fOD	0	–	400	kHz
Clock low time	tWL	10	–	–	ns
Clock high time	tWH	10	–	–	ns
Clock rise time	tTLH	–	–	10	ns
Clock low time	tTHL	–	–	10	ns
Inputs: CMD, DAT (referenced to CLK)					
Input setup time	tISU	5	–	–	ns
Input hold time	tIH	5	–	–	ns
Outputs: CMD, DAT (referenced to CLK)					
Output delay time – Data Transfer mode	tODLY	0	–	14	ns
Output delay time – Identification mode	tODLY	0	–	50	ns

a. Timing is based on CL ≤ 40pF load on CMD and Data.
b. min(Vih) = 0.7 × VDDIO and max(Vil) = 0.2 × VDDIO.

AMPAK Technology Inc.
8F, No.15-1 Zhonghua Road, Hsinchu Industrial Park, Hukou, Hsinchu, Taiwan, 30352
http://www.ampak.com.tw

SDIO High Speed Mode Timing Diagram

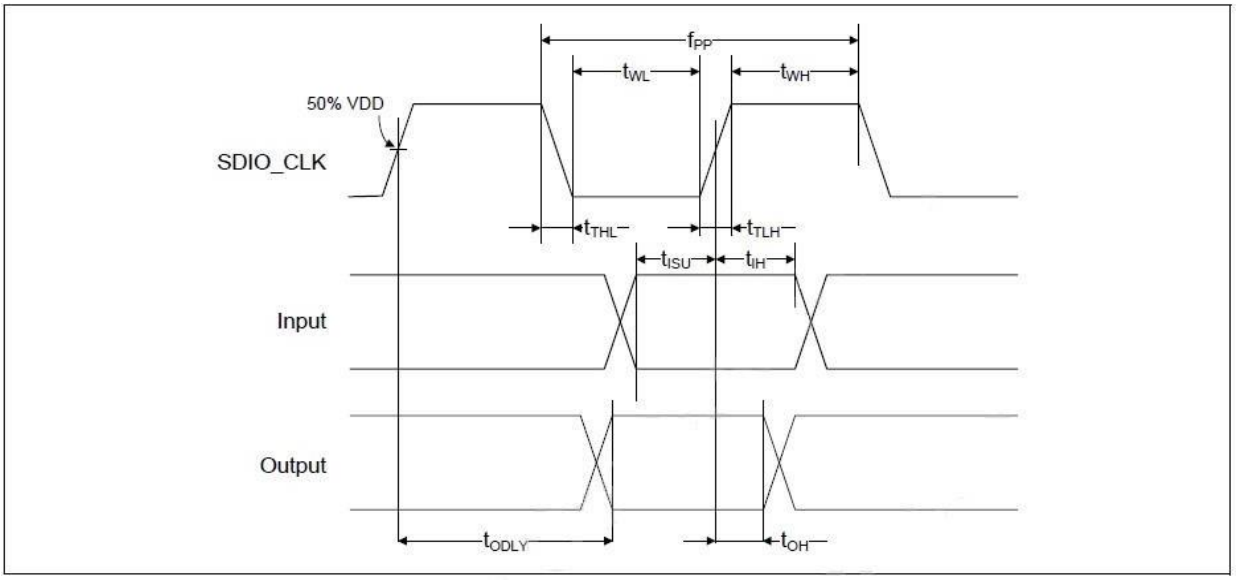

Parameter	Symbol	Minimum	Typical	Maximum	Unit
SDIO CLK (all values are referred to minimum VIH and maximum VIL[b])					
Frequency – Data Transfer Mode	fPP	0	–	50	MHz
Frequency – Identification Mode	fOD	0	–	400	kHz
Clock low time	tWL	7	–	–	ns
Clock high time	tWH	7	–	–	ns
Clock rise time	tTLH	–	–	3	ns
Clock low time	tTHL	–	–	3	ns
Inputs: CMD, DAT (referenced to CLK)					
Input setup Time	tISU	6	–	–	ns
Input hold Time	tIH	2	–	–	ns
Outputs: CMD, DAT (referenced to CLK)					
Output delay time – Data Transfer Mode	tODLY	–	–	14	ns
Output hold time	tOH	2.5	–	–	ns
Total system capacitance (each line)	CL	–	–	40	pF

a. Timing is based on CL ≤ 40 pF load on CMD and Data.
b. min(Vih) = 0.7 × VDDIO and max(Vil) = 0.2 × VDDIO.

AMPAK Technology Inc.
8F, No.15-1 Zhonghua Road, Hsinchu Industrial Park, Hukou, Hsinchu, Taiwan, 30352
http://www.ampak.com.tw

SDIO Bus Timing Specifications in SDR Modes

Clock timing (SDR Modes)

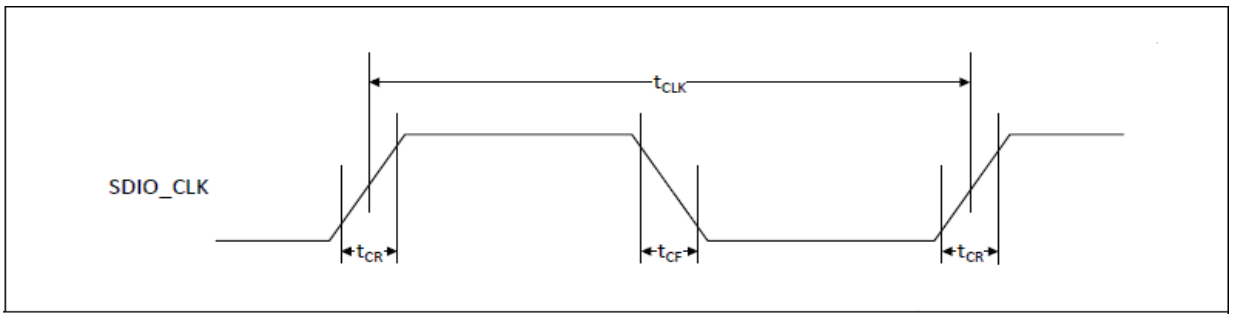

Parameter	Symbol	Minimum	Maximum	Unit	Comments
–	t_{CLK}	40	–	ns	SDR12 mode
		20	–	ns	SDR25 mode
		10	–	ns	SDR50 mode
		4.8	–	ns	SDR104 mode
–	t_{CR}, t_{CF}	–	$0.2 \times t_{CLK}$	ns	t_{CR}, t_{CF} < 2.00 ns (max) @100 MHz, C_{CARD} = 10 pF t_{CR}, t_{CF} < 0.96 ns (max) @208 MHz, C_{CARD} = 10 pF
Clock duty	–	30	70	%	–

SDIO Bus Input timing (SDR Modes)

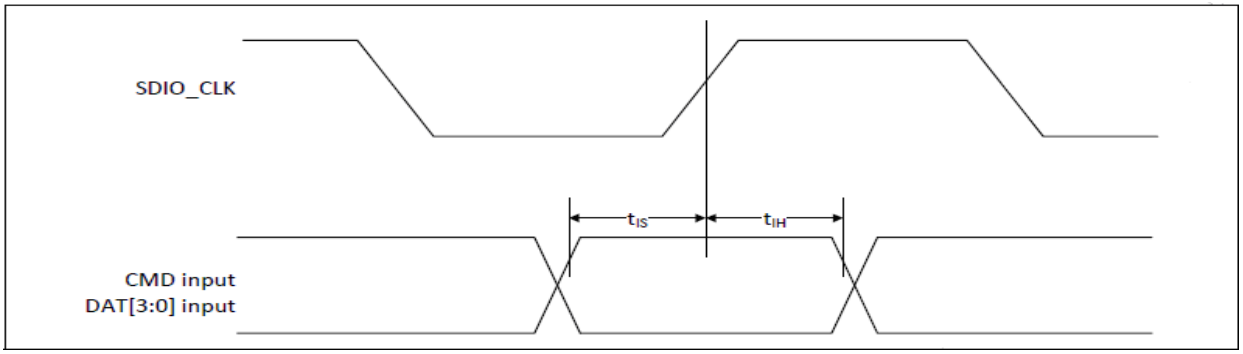

Symbol	Minimum	Maximum	Unit	Comments
SDR104 Mode				
t_{IS}	1.4	–	ns	C_{CARD} = 10 pF, VCT = 0.975V
t_{IH}	0.80	–	ns	C_{CARD} = 5 pF, VCT = 0.975V
SDR50 Mode				
t_{IS}	3.00	–	ns	C_{CARD} = 10 pF, VCT = 0.975V
t_{IH}	0.80	–	ns	C_{CARD} = 5 pF, VCT = 0.975V

AMPAK Technology Inc.
8F, No.15-1 Zhonghua Road, Hsinchu Industrial Park, Hukou, Hsinchu, Taiwan, 30352
http://www.ampak.com.tw

SDIO Bus output timing (SDR Modes up to 100MHz)

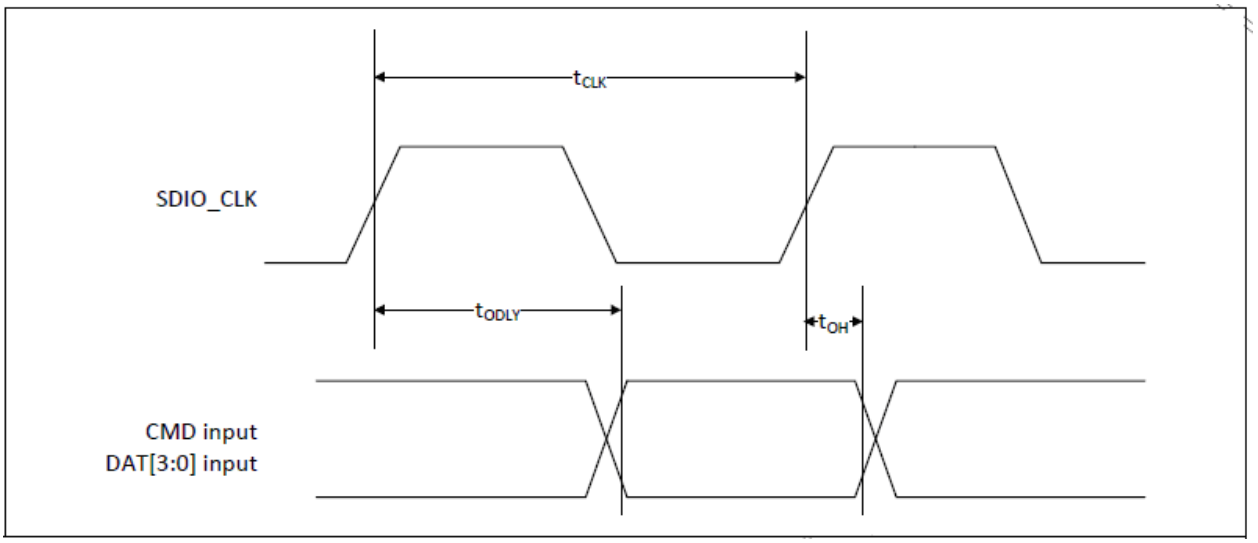

Symbol	Minimum	Maximum	Unit	Comments
t_{ODLY}	–	7.5	ns	$t_{CLK} \geq 10$ ns $C_L = 30$ pF using driver type B for SDR50
t_{ODLY}	–	14.0	ns	$t_{CLK} \geq 20$ ns $C_L = 40$ pF using for SDR12, SDR25
t_{OH}	1.5	–	ns	Hold time at the t_{ODLY} (min) $C_L = 15$ pF

Card output timing (SDR Modes 100MHz to 208MHz)

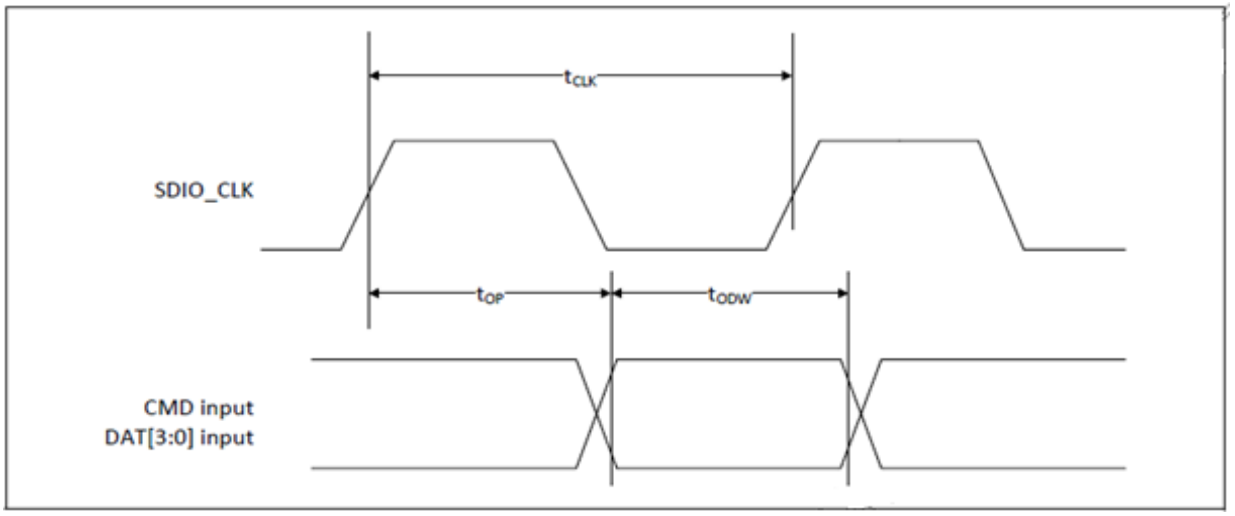

AMPAK Technology Inc.
8F, No.15-1 Zhonghua Road, Hsinchu Industrial Park, Hukou, Hsinchu, Taiwan, 30352
http://www.ampak.com.tw

Symbol	Minimum	Maximum	Unit	Comments
t_{OP}	0	2	UI	Card output phase
Δt_{OP}	−350	+1550	ps	Delay variation due to temp change after tuning
t_{ODW}	0.60	–	UI	t_{ODW}=2.88 ns @208 MHz

- Δt_{OP} = +1550 ps for junction temperature of Δt_{OP} = 90 degrees during operation
- Δt_{OP} = −350 ps for junction temperature of Δt_{OP} = −20 degrees during operation
- Δt_{OP} = +2600 ps for junction temperature of Δt_{OP} = −20 to +125 degrees during operation

Δt_{OP} Consideration for Variable Data Window (SDR 104 Mode)

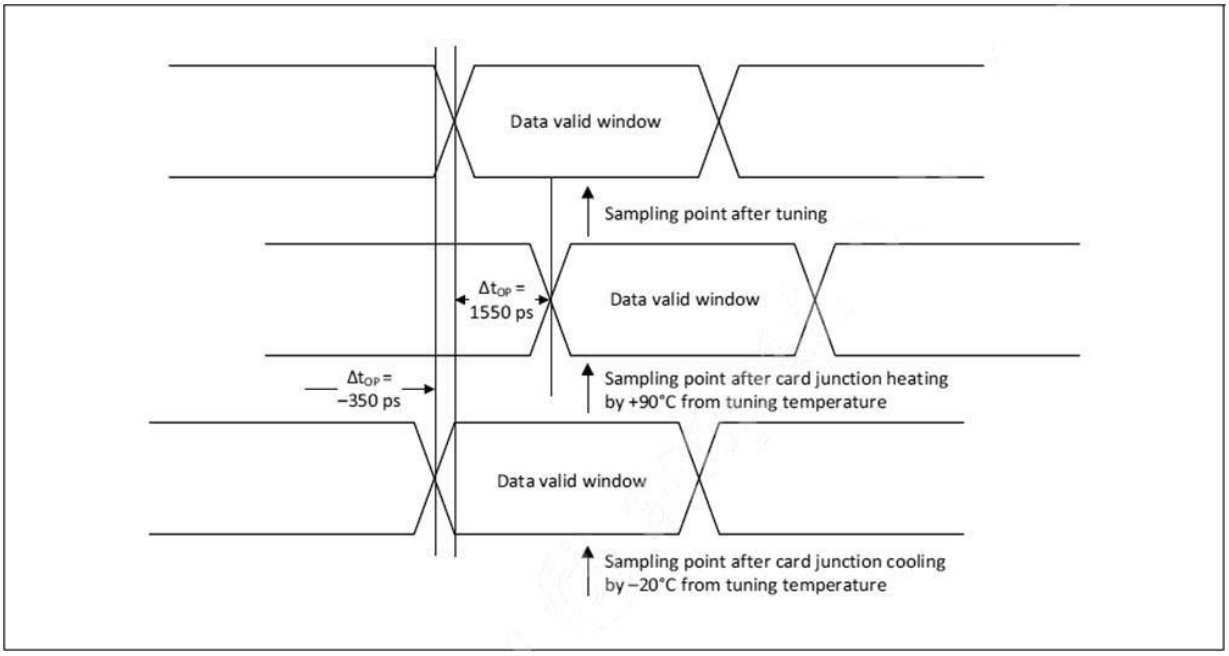

AMPAK Technology Inc.
8F, No.15-1 Zhonghua Road, Hsinchu Industrial Park, Hukou, Hsinchu, Taiwan, 30352
http://www.ampak.com.tw

SDIO Bus Timing Specifications in DDR50 Mode

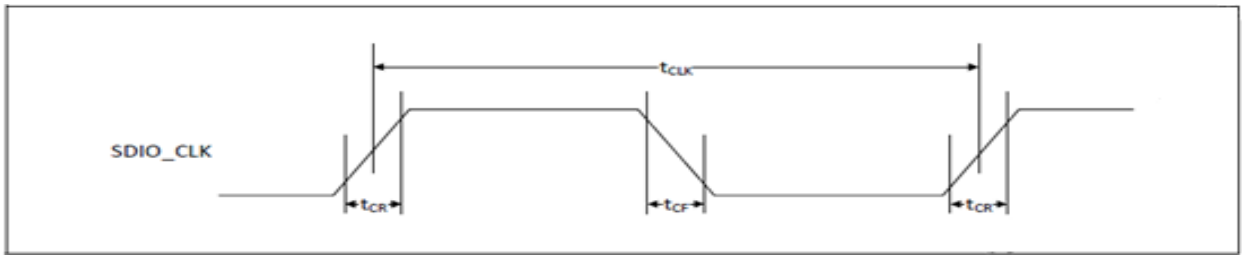

Parameter	Symbol	Minimum	Maximum	Unit	Comments
–	t_{CLK}	20	–	ns	DDR50 mode
–	t_{CR},t_{CF}	–	0.2 × tCLK	ns	t_{CR}, t_{CF} < 4.00 ns (max) @50 MHz, C_{CARD} = 10 pF
Clock duty	–	45	55	%	–

Data Timing

Parameter	Symbol	Minimum	Maximum	Unit	Comments
Input CMD					
Input setup time	t_{ISU}	6	–	ns	C_{CARD} < 10 pF (1 Card)
Input hold time	t_{IH}	0.8	–	ns	C_{CARD} < 10 pF (1 Card)
Output CMD					
Output delay time	t_{ODLY}	–	13.7	ns	C_{CARD} < 30 pF (1 Card)
Output hold time	t_{OH}	1.5	–	ns	C_{CARD} < 15 pF (1 Card)
Input DAT					
Input setup time	t_{ISU2x}	3	–	ns	C_{CARD} < 10 pF (1 Card)
Input hold time	t_{IH2x}	0.8	–	ns	C_{CARD} < 10 pF (1 Card)
Output DAT					
Output delay time	t_{ODLY2x}	–	7.5	ns	C_{CARD} < 25 pF (1 Card)
Output hold time	t_{ODLY2x}	1.5	–	ns	C_{CARD} < 15 pF (1 Card)

AMPAK Technology Inc.
8F, No.15-1 Zhonghua Road, Hsinchu Industrial Park, Hukou, Hsinchu, Taiwan, 30352
http://www.ampak.com.tw

Short Frame Sync, Slave Mode

PCM Timing Diagram (Short Frame Sync, Slave Mode)

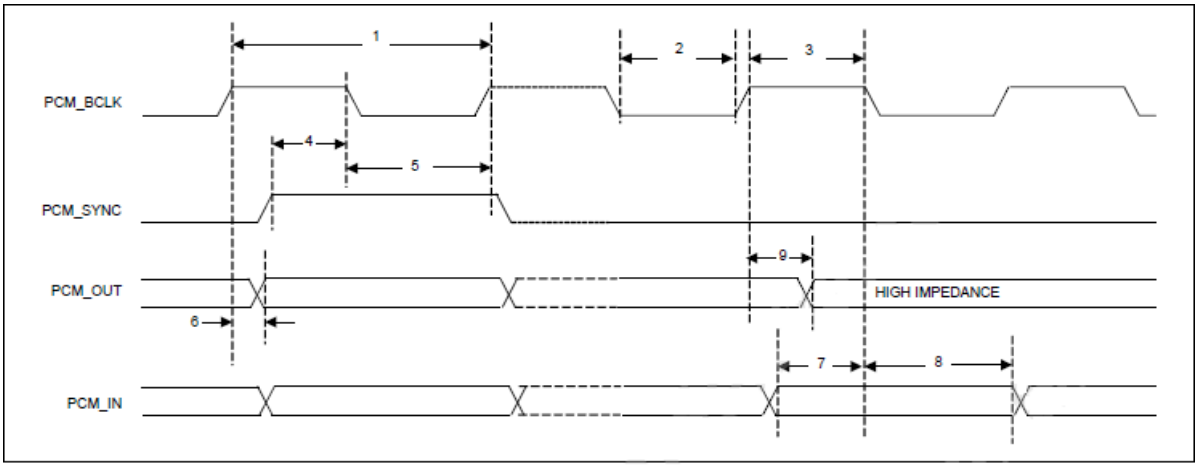

PCM Interface Timing Specifications (Short Frame Sync, Slave Mod

Reference	Characteristics	Minimum	Typical	Maximum	Unit
1	PCM bit clock frequency	–	–	12	MHz
2	PCM bit clock low	41	–	–	ns
3	PCM bit clock high	41	–	–	ns
4	PCM_SYNC setup	8	–	–	ns
5	PCM_SYNC hold	8	–	–	ns
6	PCM_OUT delay	0	–	25	ns
7	PCM_IN setup	8	–	–	ns
8	PCM_IN hold	8	–	–	ns
9	Delay from rising edge of PCM_BCLK during last bit period to PCM_OUT becoming high impedance	0	–	25	ns

AMPAK Technology Inc.
8F, No.15-1 Zhonghua Road, Hsinchu Industrial Park, Hukou, Hsinchu, Taiwan, 30352
http://www.ampak.com.tw

Long Frame Sync, Slave Mode

PCM Timing Diagram (Long Frame Sync, Slave Mode)

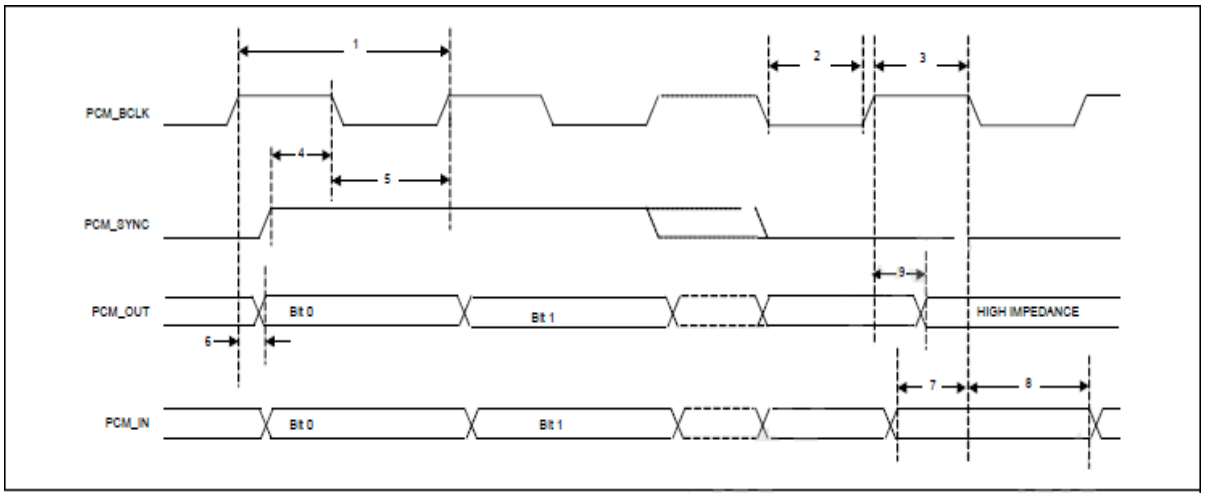

PCM Interface Timing Specifications (Long Frame Sync, Slave Mode)

Reference	Characteristics	Minimum	Typical	Maximum	Unit
1	PCM bit clock frequency	–	–	12	MHz
2	PCM bit clock low	41	–	–	ns
3	PCM bit clock high	41	–	–	ns
4	PCM_SYNC setup	8	–	–	ns
5	PCM_SYNC hold	8	–	–	ns
6	PCM_OUT delay	0	–	25	ns
7	PCM_IN setup	8	–	–	ns
8	PCM_IN hold	8	–	–	ns
9	Delay from rising edge of PCM_BCLK during last bit period to PCM_OUT becoming high impedance	0	–	25	ns

AMPAK Technology Inc.
8F, No.15-1 Zhonghua Road, Hsinchu Industrial Park, Hukou, Hsinchu, Taiwan, 30352
http://www.ampak.com.tw

Short Frame Sync, Burst Mode

PCM Burst Mode Timing (Receive Only, Short Frame Sync)

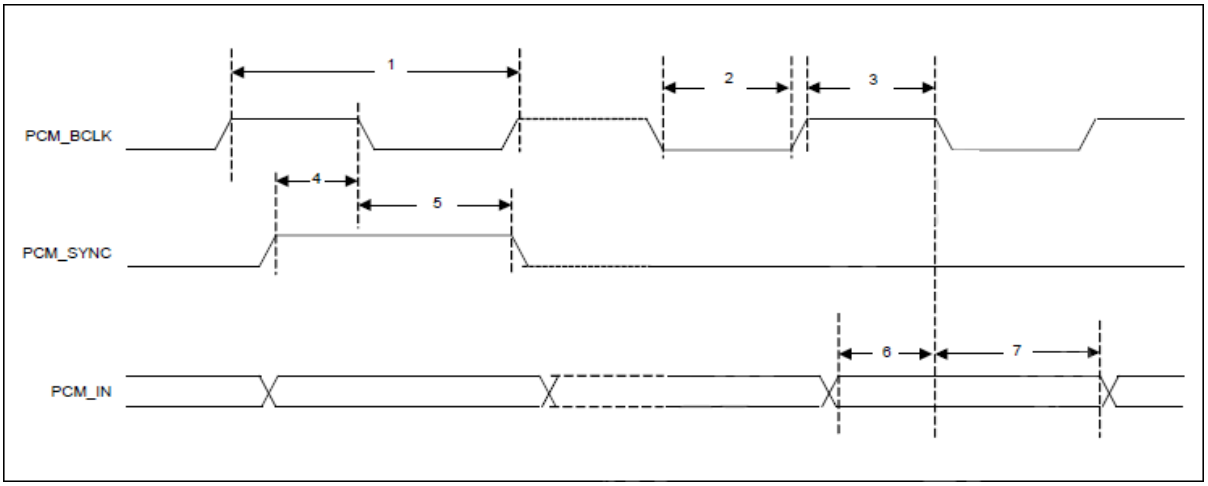

PCM Burst Mode (Receive Only, Short Frame Sync)

Reference	Characteristics	Minimum	Typical	Maximum	Unit
1	PCM bit clock frequency	–	–	24	MHz
2	PCM bit clock low	20.8	–	–	ns
3	PCM bit clock high	20.8	–	–	ns
4	PCM_SYNC setup	8	–	–	ns
5	PCM_SYNC hold	8	–	–	ns
6	PCM_IN setup	8	–	–	ns
7	PCM_IN hold	8	–	–	ns

AMPAK Technology Inc.
8F, No.15-1 Zhonghua Road, Hsinchu Industrial Park, Hukou, Hsinchu, Taiwan, 30352
http://www.ampak.com.tw

Long Frame Sync, Burst Mode

PCM Burst Mode Timing (Receive Only, Long Frame Sync)

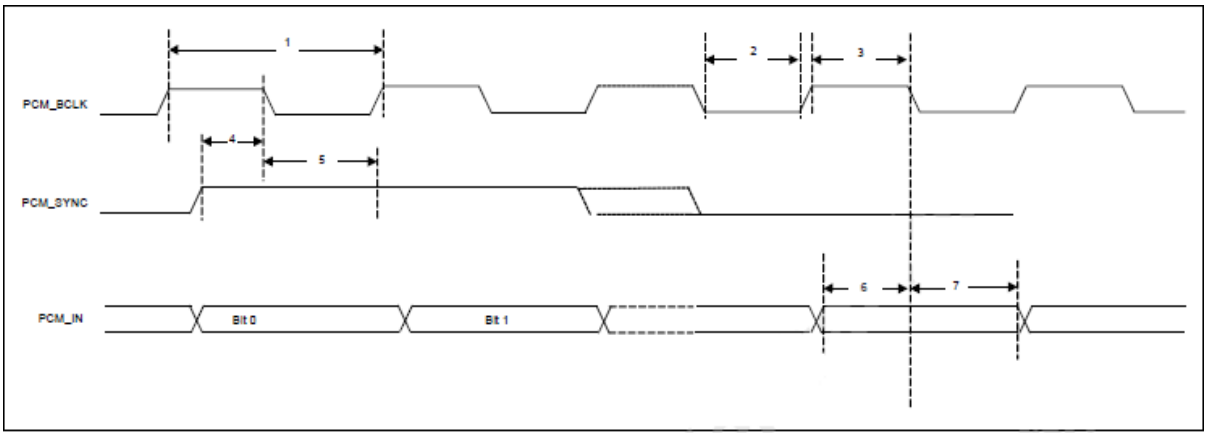

PCM Burst Mode (Receive Only, Long Frame Sync)

Reference	Characteristics	Minimum	Typical	Maximum	Unit
1	PCM bit clock frequency	–	–	24	MHz
2	PCM bit clock low	20.8	–	–	ns
3	PCM bit clock high	20.8	–	–	ns
4	PCM_SYNC setup	8	–	–	ns
5	PCM_SYNC hold	8	–	–	ns
6	PCM_IN setup	8	–	–	ns
7	PCM_IN hold	8	–	–	ns

AMPAK Technology Inc.
8F, No.15-1 Zhonghua Road, Hsinchu Industrial Park, Hukou, Hsinchu, Taiwan, 30352
http://www.ampak.com.tw

8.3 UART Interface Description

The UART is a standard 4-wire interface (RX, TX, RTS, and CTS) with adjustable baud rates from 9600 bps to 4.0 Mbps. The interface features an automatic baud rate detection capability that returns a baud rate selection. Alternatively, the baud rate may be selected through a vendor-specific UART HCI command.

UART has a 1040-byte receive FIFO and a 1040-byte transmit FIFO to support EDR. Access to the FIFOs is conducted through the AHB interface through either DMA or the CPU. The UART supports the Bluetooth UART HCI specification: H4, a custom Extended H4, and H5. The default baud rate is 115.2 Kbaud.

The UART supports the 3-wire H5 UART transport, as described in the Bluetooth specification (Three-wire UART Transport Layer). Compared to H4, the H5 UART transport reduces the number of signal lines required by eliminating the CTS and RTS signals.

The AP6256 UART can perform XON/XOFF flow control and includes hardware support for the Serial Line Input Protocol (SLIP). It can also perform wake-on activity. For example, activity on the RX or CTS inputs can wake the chip from a sleep state.

Normally, the UART baud rate is set by a configuration record downloaded after device reset, or by automatic baud rate detection, and the host does not need to adjust the baud rate. Support for changing the baud rate during normal HCI UART operation is included through a vendor-specific command that allows the host to adjust the contents of the baud rate registers. The AP6256 UARTs operate correctly with the host UART as long as the combined baud rate error of the two devices is within ±2%.

AMPAK Technology Inc.
8F, No.15-1 Zhonghua Road, Hsinchu Industrial Park, Hukou, Hsinchu, Taiwan, 30352
http://www.ampak.com.tw

Example of Common Baud Rates

Desired Rate	Actual Rate	Error (%)
4000000	4000000	0.00
3692000	3692308	0.01
3000000	3000000	0.00
2000000	2000000	0.00
1500000	1500000	0.00
1444444	1454544	0.70
921600	923077	0.16
460800	461538	0.16
230400	230796	0.17
115200	115385	0.16
57600	57692	0.16
38400	38400	0.00
28800	28846	0.16
19200	19200	0.00
14400	14423	0.16
9600	9600	0.00

UART Timing

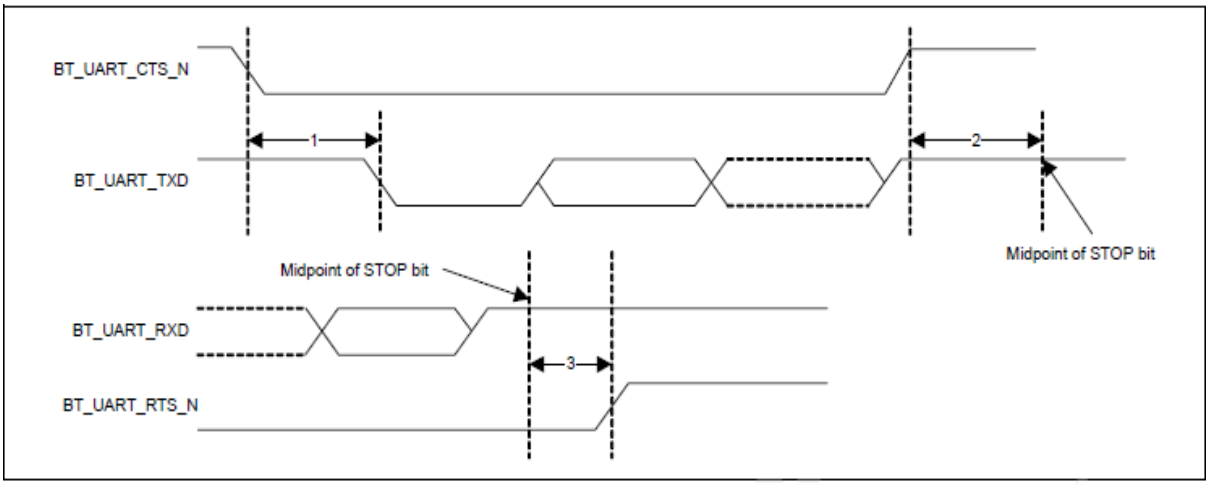

UART Timing Specifications

Ref	Characteristics	Min.	Typ.	Max.	Unit
1	Delay time, BT_UART_CTS_N low to BT_UART_TXD valid	–	–	1.5	Bit periods
2	Setup time, BT_UART_CTS_N high before midpoint of stop bit	–	–	0.5	Bit periods
3	Delay time, midpoint of stop bit to BT_UART_RTS_N high	–	–	0.5	Bit periods

AMPAK Technology Inc.
8F, No.15-1 Zhonghua Road, Hsinchu Industrial Park, Hukou, Hsinchu, Taiwan, 30352
http://www.ampak.com.tw

9. Recommended Reflow Profile

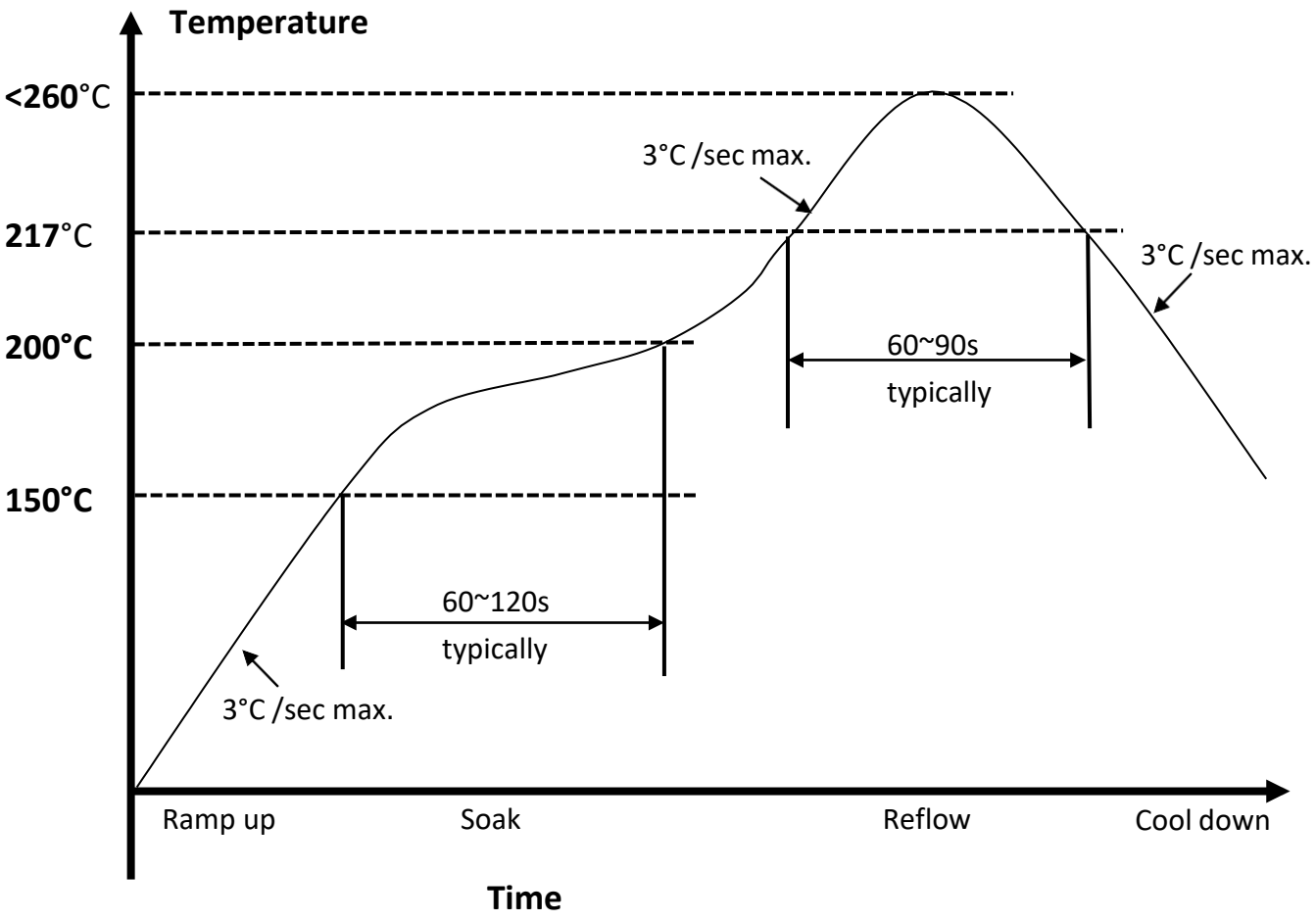

1. Referred to IPC/JEDEC standard
2. Peak Temperature : <260°C
3. Cycle of Reflow : 2 times max.
4. Adding Nitrogen (N2) to implement 2000ppm or less of oxygen concentration during reflow process is recommended.
5. If the shelf time is exceeded, be sure baking step to remove the moisture from the component.

AMPAK Technology Inc.
8F, No.15-1 Zhonghua Road, Hsinchu Industrial Park, Hukou, Hsinchu, Taiwan, 30352
http://www.ampak.com.tw

10. Package Information

10.1 Label

Label A→ Anti-static and humidity notice

Label B→ MSL caution / Storage Condition

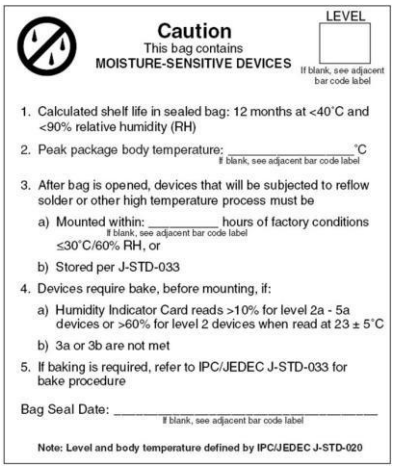

Caution
This bag contains
MOISTURE-SENSITIVE DEVICES

LEVEL
If blank, see adjacent bar code label

1. Calculated shelf life in sealed bag: 12 months at <40°C and <90% relative humidity (RH)
2. Peak package body temperature: _____ °C
   If blank, see adjacent bar code label
3. After bag is opened, devices that will be subjected to reflow solder or other high temperature process must be
   a) Mounted within: _____ hours of factory conditions
      If blank, see adjacent bar code label
      ≤30°C/60% RH, or
   b) Stored per J-STD-033
4. Devices require bake, before mounting, if:
   a) Humidity Indicator Card reads >10% for level 2a - 5a devices or >60% for level 2 devices when read at 23 ± 5°C
   b) 3a or 3b are not met
5. If baking is required, refer to IPC/JEDEC J-STD-033 for bake procedure

Bag Seal Date: _____
If blank, see adjacent bar code label

Note: Level and body temperature defined by IPC/JEDEC J-STD-020

Label C→ Inner box label .

PO: -
AMK DEVICE: -
PKG S/N: 9PKGYYMMDDNNNNN
Model Name: APXXXXXXX (R3HF)
P/N: 99X-XXX-XXXXR
Quantity: XXXX
Date Code: YYWW
Lot Code: XXXXXXXX

Label D→ Carton box label .

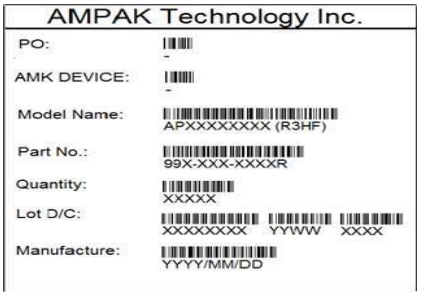

AMPAK Technology Inc.

PO: -
AMK DEVICE: -
Model Name: APXXXXXXXX (R3HF)
Part No.: 99X-XXX-XXXXR
Quantity: XXXXX
Lot D/C: XXXXXXXX YYWW XXXX
Manufacture: YYYY/MM/DD

AMPAK Technology Inc.
8F, No.15-1 Zhonghua Road, Hsinchu Industrial Park, Hukou, Hsinchu, Taiwan, 30352
http://www.ampak.com.tw

10.2 Dimension

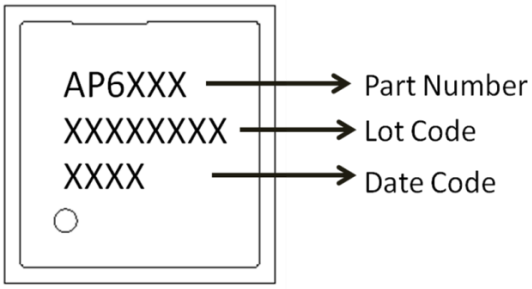

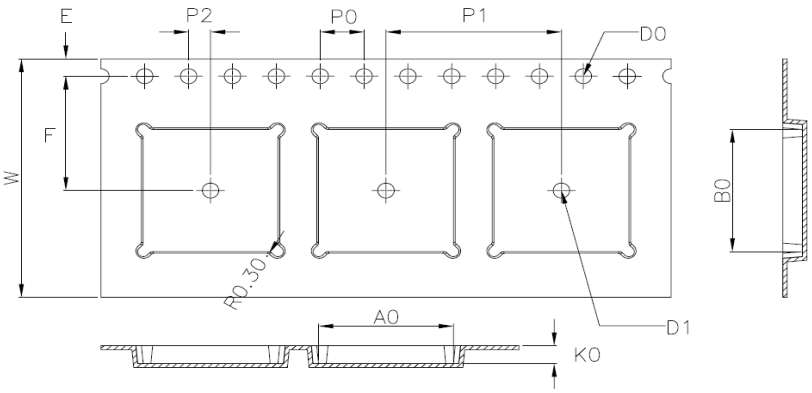

W	24.00±0.30
A0	12.30±0.10
B0	12.30±0.10
K0	1.80±0.10
E	1.75±0.10
F	11.50±0.10
P0	4.00±0.10
P1	16.00±0.10
P2	2.00±0.10
D0	$1.50^{+0.10}_{-0.00}$
D1	ø1.50MIN

1. 10 sprocket hole pitch cumulative tolerance ±0.20.
2. Carrier camber is within 1 mm in 250 mm.
3. Material: Black Conductive Polystyrene Alloy.
4. All dimensions meet EIA-481-D requirements.
5. Thickness: 0.30±0.05mm.
6. Component load per 13”reel : 1500 PCS

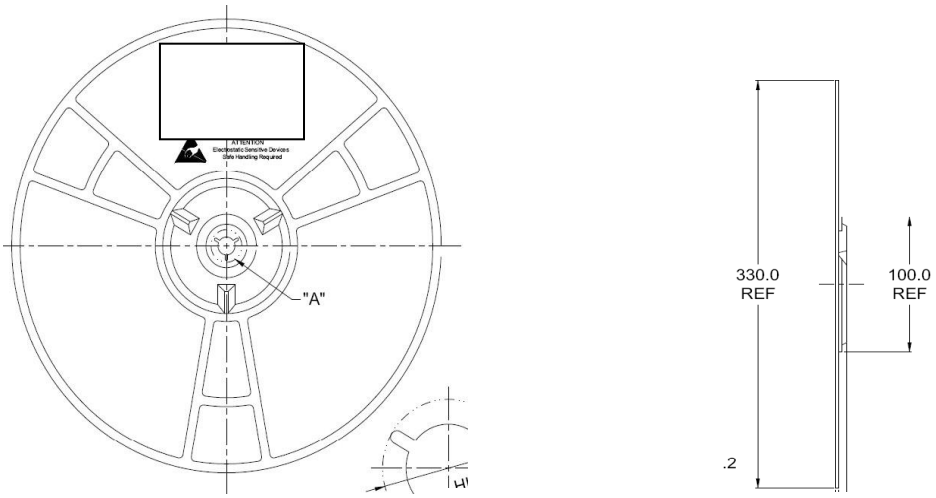

AMPAK Technology Inc.
8F, No.15-1 Zhonghua Road, Hsinchu Industrial Park, Hukou, Hsinchu, Taiwan, 30352
http://www.ampak.com.tw

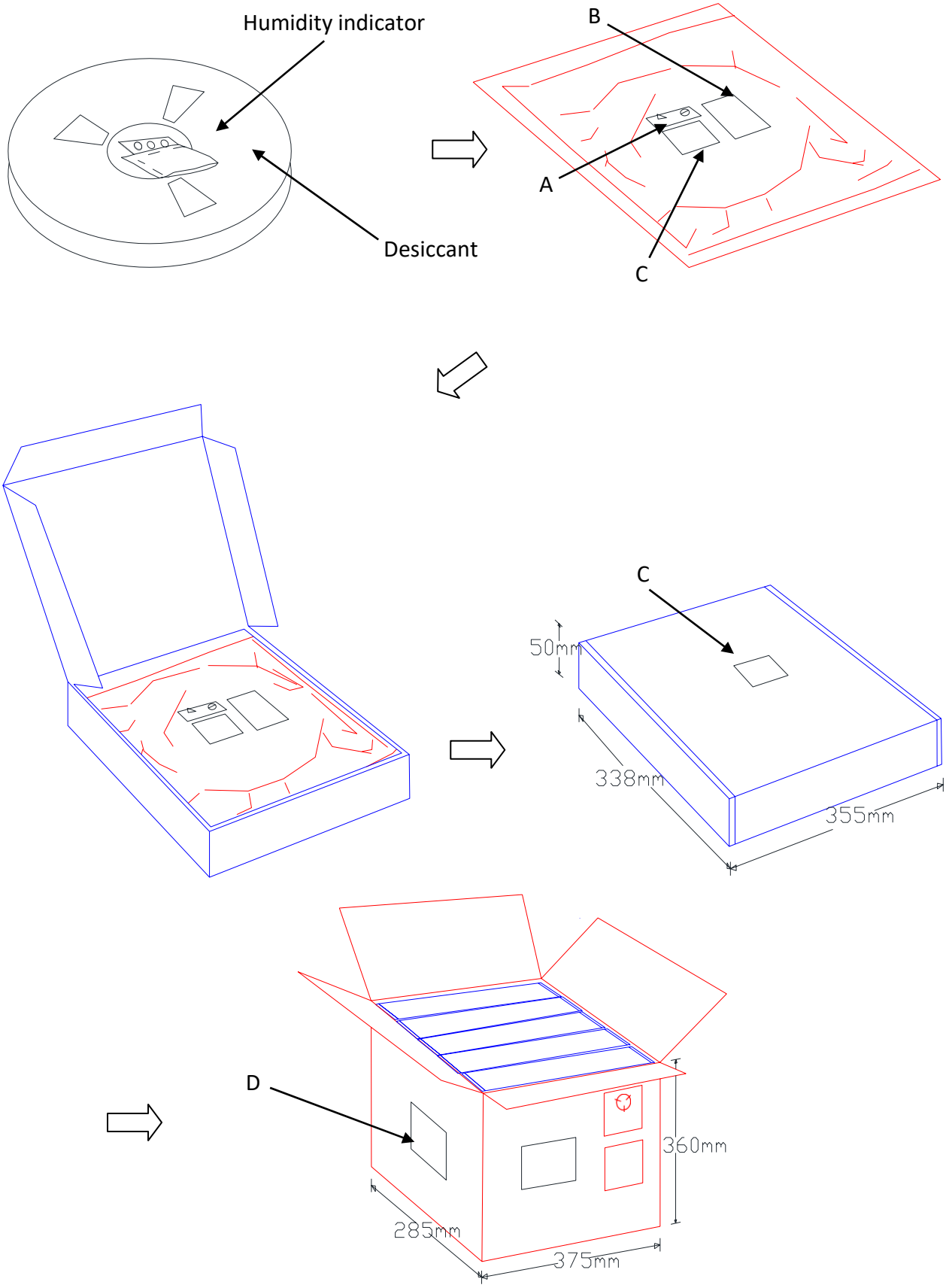

AMPAK Technology Inc.
8F, No.15-1 Zhonghua Road, Hsinchu Industrial Park, Hukou, Hsinchu, Taiwan, 30352
http://www.ampak.com.tw

FCC Compliance Statement:

Federal Communication Commission Interference Statement
This equipment has been tested and found to comply with the limits for a Class B digital device, pursuant to Part 15 of the FCC Rules. These limits are designed to provide reasonable protection against harmful interference in a residential installation. This equipment generates, uses and can radiate radio frequency energy and, if not installed and used in accordance with the instructions, may cause harmful interference to radio communications. However, there is no guarantee that interference will not occur in a particular installation. If this equipment does cause harmful interference to radio or television reception, which can be determined by turning the equipment off and on, the user is encouraged to try to correct the interference by one of the following measures:

- Reorient or relocate the receiving antenna.
- Increase the separation between the equipment and receiver.
- Connect the equipment into an outlet on a circuit different from that to which the receiver is connected.
- Consult the dealer or an experienced radio/TV technician for help.

This device complies with Part 15 of the FCC Rules. Operation is subject to the following two conditions: (1) This device may not cause harmful interference, and (2) this device must accept any interference received, including interference that may cause undesired operation.

IMPORTANT NOTE:
This module is intended for OEM integrator. This module is only FCC authorized for the specific rule parts listed on the grant, and that the host product manufacturer is responsible for compliance to any other FCC rules that apply to the host not covered by the modular transmitter grant of certification. The final host product still requires Part 15 Subpart B compliance testing with the modular transmitter installed.
Additional testing and certification may be necessary when multiple modules are used.
OEM integrators that they must use the equivalent antennas or C2PC will be required.

20cm minimum distance has to be able to be maintained between the antenna and the users for the host this module is integrated into. Under such configuration, the FCC radiation exposure limits set forth for an population/uncontrolled environment can be satisfied.

Any changes or modifications not expressly approved by the manufacturer could void the user's authority to operate this equipment.

The host manufacturer should reference KDB Publication 996369 D04 Module Integration Guide.

USERS MANUAL OF THE END PRODUCT:
In the users manual of the end product, the end user has to be informed to keep at least 20cm separation with the antenna while this end product is installed and operated. The end user has to be informed that the FCC radio-frequency exposure guidelines for an uncontrolled environment can be satisfied.

The end user has to also be informed that any changes or modifications not expressly approved by the manufacturer could void the user's authority to operate this equipment.

This device complies with Part 15 of FCC rules. Operation is subject to the following two conditions: (1) this device may not cause harmful interference and (2) this device must accept any interference received, including interference that may cause undesired operation.

AMPAK Technology Inc.
8F, No.15-1 Zhonghua Road, Hsinchu Industrial Park, Hukou, Hsinchu, Taiwan, 30352
http://www.ampak.com.tw

LABEL OF THE END PRODUCT:
The final end product must be labeled in a visible area with the following " Contains TX FCC ID: ZQ6-AP6256 This device complies with Part 15 of FCC rules. Operation is subject to the following two conditions: (1) this device may not cause harmful interference and (2) this device must accept any interference received, including interference that may cause undesired operation.

Antenna Placement

Recommended Placement and Clearance for Antenna

The fundamental design concepts are as follows with regarding to placement of antenna parts:

- ★ Make sure the RF PAD impedance is 50 ohm +/- 10%.
- ★ Place the antenna parts near the RF output port of wireless module as close as possible to avoid more insertion loss of RF transmission line on main board.
- ★ Keep antenna parts away any metal materials. The clearance is 4cm or above in order to guarantee radiation performance.
- ★ Metal housing or metal-plated housing can influence antenna performance seriously.
- ★ Keep antenna parts away any noise sources, for instance, HDMI or high speed data buses, DDR, PMU , SSD...etc.
- ★ Ensure the isolation between Wi-Fi and Bluetooth antenna, 25 dB or above, for ideal Wi-Fi / BT co-existence.

4.2 Recommended Footprint for IPEX RF Connector

It is strongly recommended to follow reference footprint of RF connector in data sheet. Certain of design rules are shown on Figure 1 to benefit optimal RF performance and yield:

1. Put a NPTH hole underneath the RF signal pin of IPEX connector.
2. Put some ground holes near the ground pads properly.

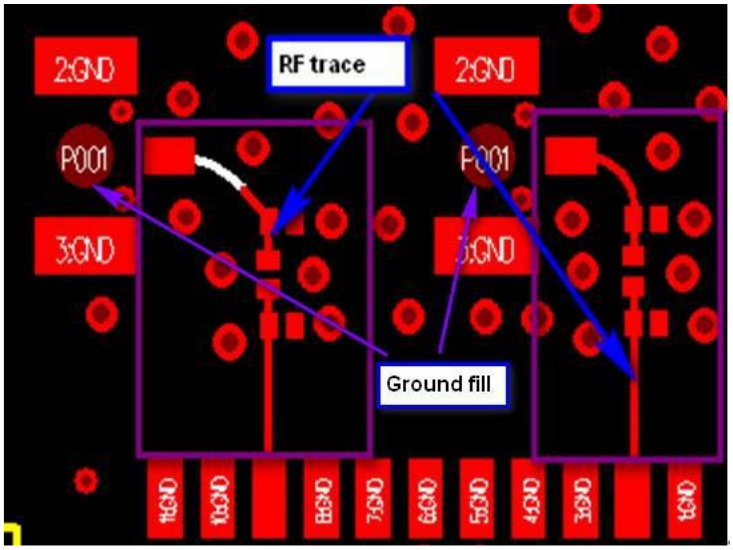

Figure 1

AMPAK Technology Inc.
8F, No.15-1 Zhonghua Road, Hsinchu Industrial Park, Hukou, Hsinchu, Taiwan, 30352
http://www.ampak.com.tw

Printed Circuit Board Layout Guidelines

This chapter comes up with PCB layout guidelines for customer's board design in accordance with AMPAK evaluation board. Components recommended placement, specifications and key points are involved.

Routing the RF Transmission Lines

The essential design rules of RF transmission lines are as follows:

- ★ The characteristic impedance of RF transmission line is 50 Ohm +/- 10%.
- ★ Keep the RF transmission lines on the same layer as module and RF connector mounted in order to guarantee 50 Ohm characteristic impedance and optimal matching.
- ★ Put some ground through holes properly to guarantee the ideal grounding effects.
- ★ The recommended line width of RF transmission line is 8mil or above by well-designed microstrip line or CBCPW based on specific PCB stack-up and well-selected reference ground plane as Figure 2.

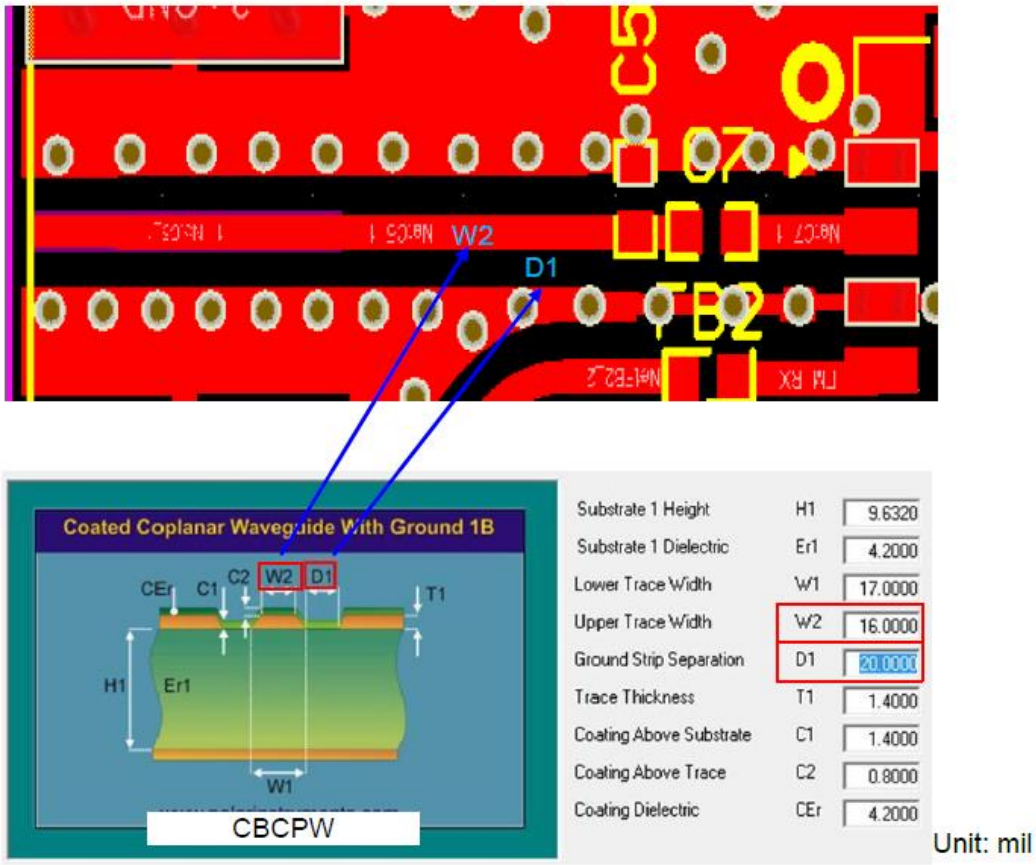

Figure 2

AMPAK Technology Inc.
8F, No.15-1 Zhonghua Road, Hsinchu Industrial Park, Hukou, Hsinchu, Taiwan, 30352
http://www.ampak.com.tw

Antenna Information

Ant.	Port	Brand	Model Name	Antenna Type	Connector	Gain (dBi)
1	1	PULSE ELECTRONICS PTE LTD	TZ2412W	Dipole	Reversed-SMA	Note 1

Note 1:

Ant.	Gain (dBi)		
	WLAN 2.4GHz	WLAN 5GHz	Bluetooth
1	3.68	4.65	3.68

Caution
This bag contains
MOISTURE-SENSITIVE DEVICES

LEVEL
4
If blank,see adjacent bar code label

1. Calculated shelf life in sealed bag:12months at<40℃and <90% relative humidity(RH)
2. Peak package body temperature:___250___℃
   If blank,see adjacent bar code label
3. After bag is opened,devices that will be subjected to reflow solder or other high temperature process must be
   a) Mounted within:___72___hours of factory conditions
   If blank,see adjacent bar code label
   ≤30℃/60% RH,or
   b) Stored per J-STD-033
4. Devices require bake,before mounting,if:
   a) Humidity Indicator Card reads>10% for level 2a-5a devices or>60% for level 2 devices when read at 23±5℃
   b) 3a or 3b are not met.
5. If baking is required, refer to IPC/JEDEC J-STD-033 for bake procedure.

Bag Seal Date:_____
If blank,see adjacent bar code label

Note:Level and body temperature defined by IPC/JEDEC J-STD-020

AMPAK Technology Inc.
8F, No.15-1 Zhonghua Road, Hsinchu Industrial Park, Hukou, Hsinchu, Taiwan, 30352
http://www.ampak.com.tw