SINFONIA TECHNOLOGY

Card Printer

CHC-C320-5

Operation Manual

SINFONIA TECHNOLOGY CO., LTD.

http://www.sinfo-t.jp

Handling of this Manual

1. All rights reserved. No part of this operation manual covered by the copyright herein may be reproduced or copied in any form or by any means, including translation, without the written permission of SINFONIA TECHNOLOGY Co., Ltd.

2. The specifications in this operation manual are subject to change without prior notice.

3. In case of having any difficulties or finding the fault in this manual, your information to SINFONIA TECHNOLOGY will be highly appreciated.

Introduction

This manual describes detailed instructions for handling of and basic operation of Card Printer CHC-C320-5.
We will describe this product as “the printer” in the manual.
Read this manual thoroughly to understand how to install and operate the printer before using it.

Notice

- Keep this manual near the printer and operators can refer to this manual periodically.
- In case, lost or damaged this manual, contact your dealers.
- In the case of transfer, do not forget to put this manual together with the printer.

CONTENTS

PREFACE

Chapter 1. Important Safety Instruction 1-1
Environments 1-1
Handling Instruction 1-2
Handling Instruction for Consumable and Printed Output 1-3

Chapter 2. Installing and Set Up 2-1
Unpacking and Checking the Accessories 2-1
Parts Name and Function 2-2
Printer Status Lamps Name and Printer Status 2-3
Connecting Power Cable 2-4
Connecting USB Cable 2-4
Installing Clean Roller 2-5
Setting Color Ink Ribbon 2-6
Setting Hologram Ribbon 2-7
Setting the Card 2-8
Transporting the Printer 2-10
How to print 2-10

Chapter 3. Routine Maintenance 3-1
Cleaning of Thermal Head, Platen Roller, Cleaning Roller 3-1
Cleaning of Outer Cover 3-3
Cleaning of Filter 3-3

Chapter 4. Error Handling 4-1
Printer Status Lamps are displayed in red 4-1
Failure Symptoms 4-2
Paper Jam 4-3
Power Supply Interrupted during Printing 4-7
When Ribbon is snapped 4-7

Chapter 5. In order to more comfortably use 5-1
For longer Printer usage 5-1

After-Sales Service 5-1

Chapter 1. Important Safety Instruction

This manual provides detailed instructions for the safety use of the printer.
Read this manual carefully before operating the printer to ensure to have proper use.

◆In this manual, there are notes that require special attention.
◆ For your safety operation, Safety notices are separated as follows;

Warning: Inappropriate handling may cause serious injury or death.

Caution: Inappropriate handling may cause minor injury and/or damage to property.

Attention: Indicates the cause of the trouble and the environmental condition.

◆It is difficult to forecast all the danger when customers are setting or using the printer. Therefore, warnings in this Operation Manual, in the other documents on the printer cannot cover all the cases.
In case of performing the operation or maintenance which are not described in this manual, all the concern for the safety have to be taken care of at the customer side.
◆Operations and the notification for the maintenance described in this manual and other documents are for the proper use of the printer.
◆In case of use the printer in propose which is not described in this manual, all the concern for the safety have to be take care of at the customer side.
◆Do not perform the operation which are prohibited in this manual and other documents.
◆The contents that cannot be printed due to a failure while using the use of this printer are not guaranteed.

Environments

To use the printer safety, please pay attention to the followings:

Caution:Do not let children to touch the printer or the cables.
It may cause accidents or electric shock.

Caution: Do not place the printer under humid or dusty place.
It may cause fire, electric shock or printer problem.
Do not place the printer with dust, sand and high humidity such as bathing place, bathroom, hot spring or on the street.

Caution: Do not place the printer on rickety place and/or inclined place.
Printer may fall down or tumble and it may cause injury.

Warning: Do not insert or fall metallic items or flammable items into the printer through the openings of the printer, it may cause fire or electric shock.

Warning: Do not put vase, flowerpot, or a cup with water inside or on the metric items.
In case the water spilt or metric items fall into the printer, it may cause the fire or electric shock.

Warning: Do not block the openings of the printer. In case, the opening blocked, the heat will remain inside and it may cause fire.

Attention: Do not place the printer under the low temperature such as ski resort, skating rink or open-air with direct sunlight.

Chapter 1. Important Safety Instruction

Handling Instruction

In handling the printer, please pay attention to the followings;

Warning: Lift the printer from its box and put it onto a flat table or desk.

Warning: The printer is too heavy to be lifted by one person. (Nearly 23 Kg)
Please take a good care of your hands and fingers when lifting the printer from the box.

Warning: Be careful when you transport the printer on the slippery floor.

Warning: In case you drop the printer, firstly turn off the power of the printer and remove the power cable, then contact the dealers or service center. If use the printer without any checking, may cause fire or electric shock.

Warning: Secure the power cable firmly.

Warning: Only specified power cable should be used, and please make sure that it is connected properly before turn the printer power on. If do not operate correctly, it may cause fire or electric shock.
Also, there is a possibility to occur radio or television signal-receiving interference.
In the case you cannot connect properly, please contact to the dealers or services center.

Warning: Do not attempt to service for the printer beyond the instruction specified in this document. In case it is impossible to recover the problem, please contact to the dealers or service center.

Warning: The thermal head reaches high temperature during operation but this is normal. Do not touch the thermal head.

Warning: Never disassemble or modify the printer.
Some sections of the printer contain a high voltage or become very hot. Ignoring this warning may cause electric shock, fire or burns.

Warning: The card will be released from the discharge port at a high speed. Do not look into the outlet while in use. It may cause blindness or injury.

Warning: If the fan motor failure, it may cause fire. For replace it please contact to the dealers or service center.

Attention: Touching the surface of the thermal head directly may cause damage to thermal head. When hard object get into the printer, it may cause damage to the printer mechanism. In such case, please stop to use the printer.

Attention: An appropriate interface cable and power cable will be required to use this printer.

Chapter 1. Important Safety Instruction

Handling Instruction for Consumable and Printed Output

In handling the ink ribbon, card and printed output, please pay attention to the followings;

Attention: Card Handling

- Use the card specified by SINFONIA TECHNOLOGY.
- Store the card in a dry and dark place to avoid the direct Sunlight. (Temperature less than 30°C, humidity less than 60%).
- Do not touch the card surface before printing to avoid the fingerprints.
- Do not leave the card on the floor or in place which might have a foreign matter. Something such as dust or water drops might attach to the card.

Attention: Ink Ribbon Handling

- Use the ink ribbon specified by SINFONIA TECHNOLOGY.
- Store the ink ribbon in cool place to avoid the direct Sunlight. (Temperature less than 30°C, humidity less than 60%).
- Do not leave the ink ribbon on the floor or in a dusty place. It might cause foreign matter adhesion.

Attention: Printed Output Handling

- Store the printed output in a dark place to avoid the direct sunlight.
- Store the printed output away from the organic fluid such as benzene, thinner and alcohol which may change or deteriorate the colors.

Caution: When abandon the ink ribbon, please handle it as harmful industrial waste.

Caution: Be careful not to injure your hands with the card edge when handling card.

Chapter 2. Installing and Set Up

This chapter explains the unpacking and set up of the printer.
Before proceeding to this chapter, please make sure to read Chapter 1. Important Safety Instruction.

Unpacking and Checking the Accessories

1. Open the box and remove the box containing the accessories and protection materials.

> Attention: Keep the packaging materials. The box and protection materials are necessary when moving or transporting the printer. Make sure that they are retained.

2. Take out the printer by holding front and back of the printer.

> Caution: This printer weighs about 21 Kg.
> Please handle it carefully.
> When the printer is taken out of packing box or when you want to carry it, please hold the handle parts in front and back of the printer.
> Transportation and installation must be done by two or more personnel.

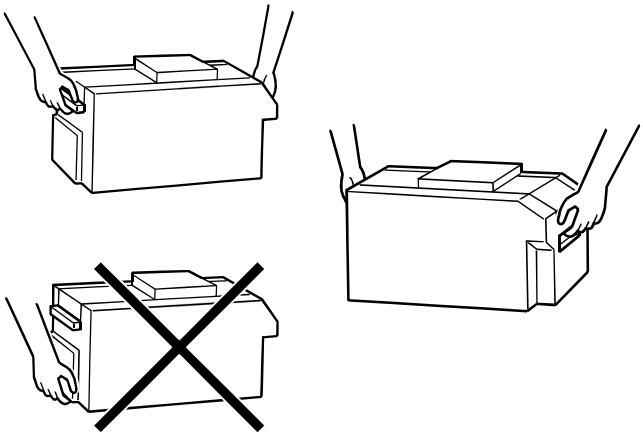

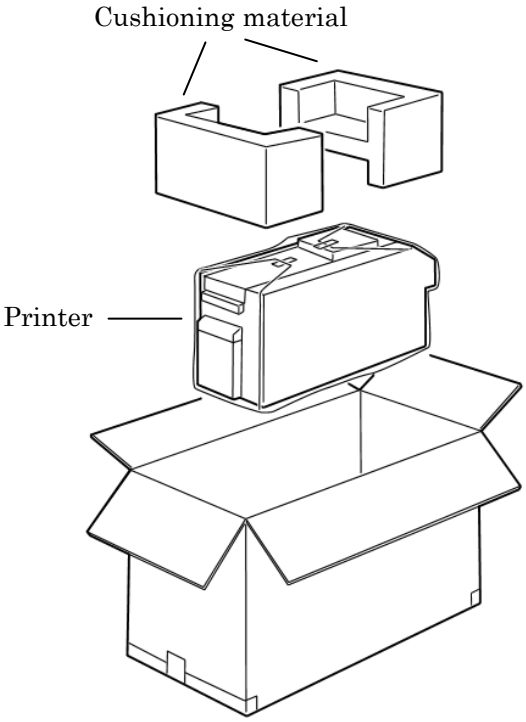

3. Accessory details

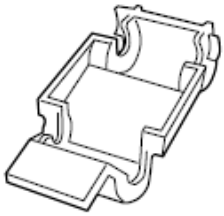

Ribbon Cassette (Color)

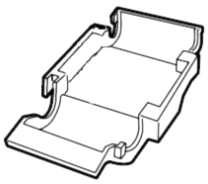

Ribbon Cassette (SP)

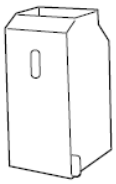

Dust Box

Cleaning Roller

Chapter 2. Installing and Set Up

Parts Name and Function

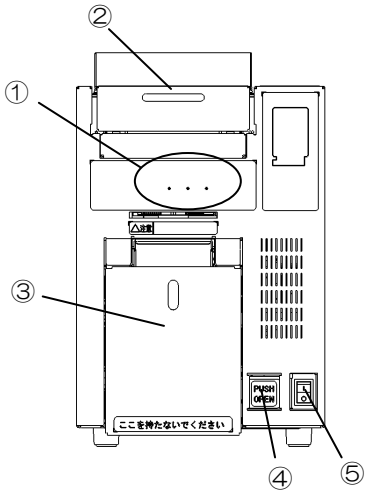

(Front View)

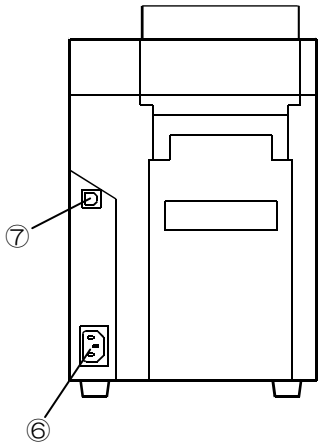

(Rear View)

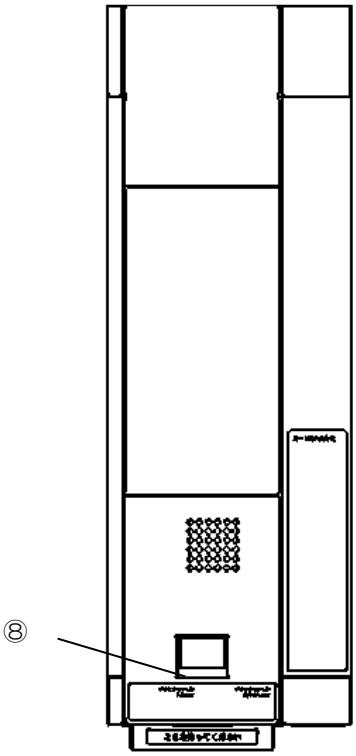

(Upper View)

No.	Name	Function
①	Printer Status Indicator	Printer status display lamps are located on the panel.
②	Upper Unit	Open when replacing the ink ribbon or when performing maintenance.
③	Card set unit	Open when set the card, or when performing maintenance.
④	Card set unit open button	Push this button to open the card set unit.
⑤	Power Switch	This switch turns on/off the power of the printer. When press the "|" marked side of the switch, the power turn on. When press the "○" marked side of the switch, the power turn off. <Caution>Once the printer is turned off, wait at least 3 seconds before turning it on again.
⑥	Power Connector	To be used to connect the power cable.
⑦	USB Connector	To be used to connect the USB cable.
⑧	Upper Unit Open Lever	Hold this lever to open the open guide unit,

Printer Status Lamps Name and Printer Status

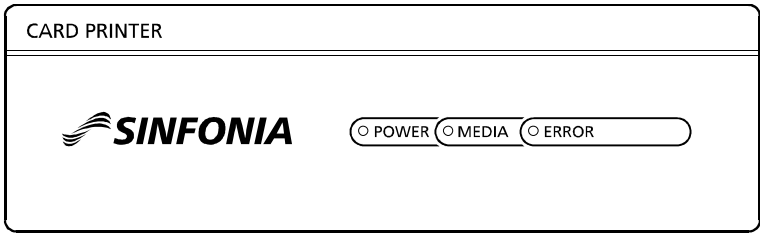

LED Display			Description
POWER	MEDIA	ERROR	
○	○	○	The power of printer is off.
＊	○	○	The printer is processing.
●	○	○	The printer is ready to make prints.
●	○	＊	The card set unit or upper unit are opened.
●	○	●	Card jammed in printer. Mechanical part is faulty. Trouble of printer control board.
●	＊	●	The ink ribbon loaded is not supported.
●	●	●	Card is not set. Out of card. The ink ribbon is not loaded. The ink ribbon is empty.
●	＊	○	The printer is initializing for the ink ribbon.

Printer status lamp display ●:on, ○:off, ＊:flashing

Connecting Power Cable

Insert the power cable into the power connector located on the rear of the printer.

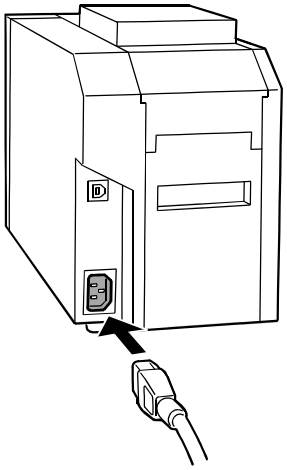

Warning: Make sure to turn off the power of the printer before inserting the power cable.

Warning: Make sure to insert the power cable correctly. If not, it may cause fire or the printer problem.

Warning: Do not insert or remove the power cable with wet hands. It may cause electric shock.

Warning: Do not make any damage or any modification to the power cable. Never put heavy items on the power cable, give a strong pull to the power cable or twist the power cable. It may cause fire or electric shock.

Warning: When moving the printer, make sure to turn off the power of the printer, remove the power cable in order to have no connection with other devices. Otherwise, the power cable might be damaged and it can cause the fire and electric shock.
Also there is a possibility to fall down caught by the cable.

the printer, disconnect the power cable for safety.

Warning: Do not use extension cord. It may cause fire or electric shock.

Connecting USB Cable

Connect the USB cable from computer to the USB connector located on the left rear side of the printer.
Fully insert the USB cable.

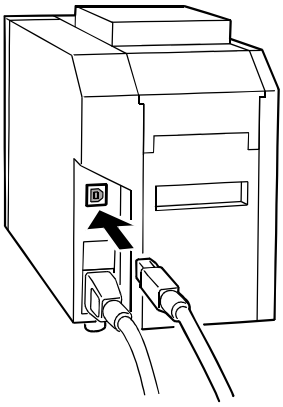

Attention: Make sure that the printer is in the waiting status before remove the USB cable. It would not be able to print correctly in the case the USB cable be removed during data transfer.

Installing Clean Roller.

1. Pull the upper unit open lever to open the upper unit.

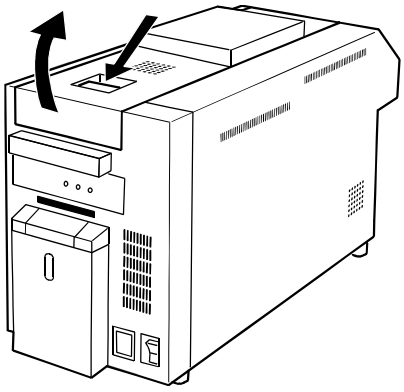

Pull the upper unit open lever and slowly move it upward to open the upper unit.

⚠ Caution: Keep holding the upper unit until the upper unit is fixed.

2. Take off the ribbon cassette, then remove the protection sheet.

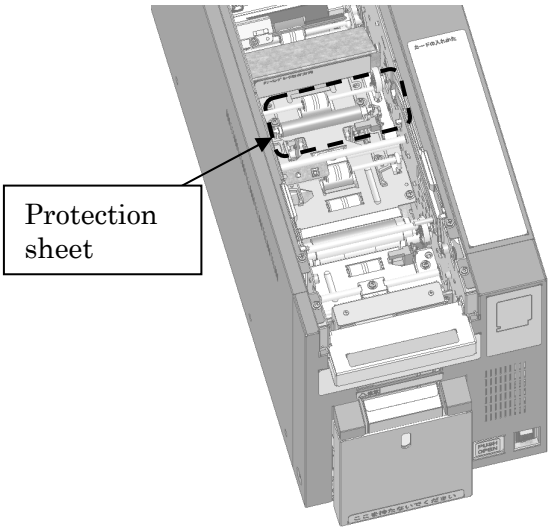

3. Check that the cleaning roller is installed.

If it is not settled, please push the cleaning roller lightly into the place shown in the following figure until you hear a click to confirm it is settled.

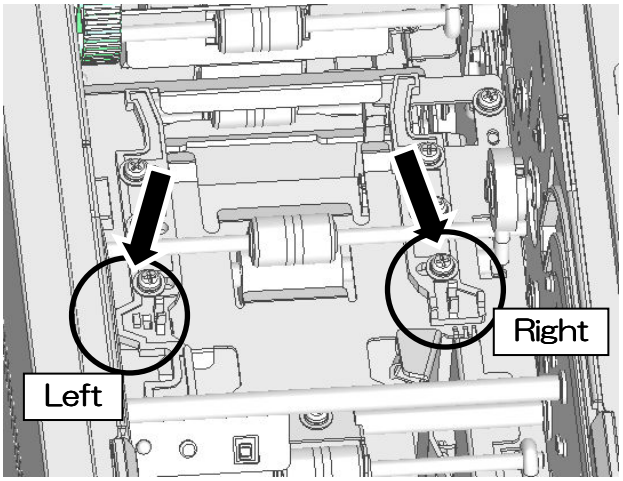

（direction of the cleaning roller）

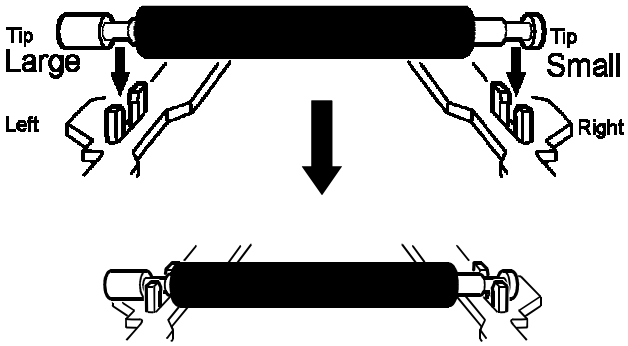

4. Close the upper unit.

Setting Color Ink Ribbon

1. Pull the upper unit open lever to open the upper unit.

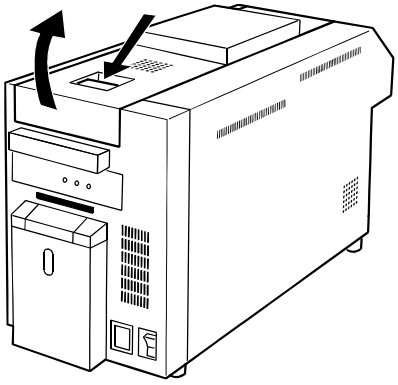

2. Place the ink ribbon to the ribbon cassette.

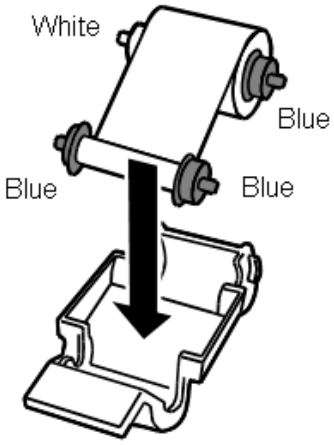

Place the ink ribbon on the curved part.
Push until you hear a click to confirm it is settled properly.

⚠ Be careful not to get any dust, etc. on the ink ribbon.

3. Place the ribbon cassette to the printer.

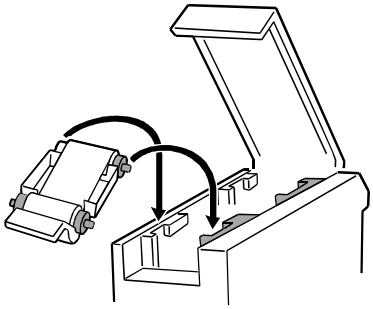

Remove any slack in the ribbon before setting.

（How to take out the ribbon cassette）

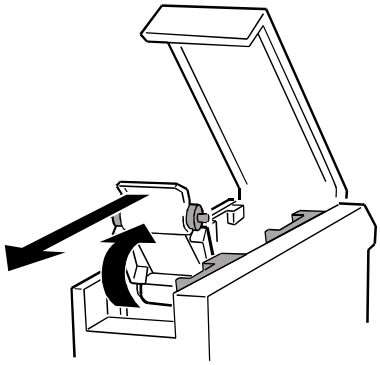

4. Close the upper unit.

Setting Special Color Ink Ribbon

1. Pull the upper unit open lever to open the upper unit.

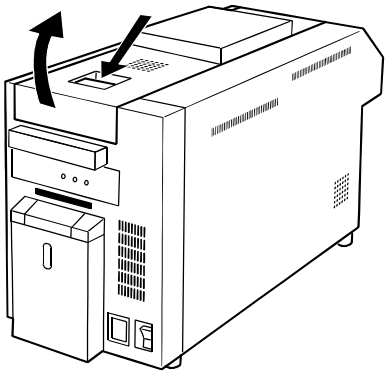

2. Place the ink ribbon to the ribbon cassette.

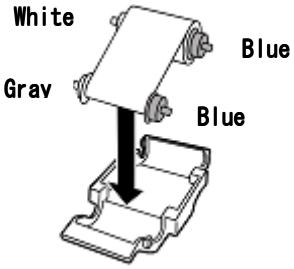

Place the ink ribbon on the curved part. Push until you hear a click to confirm it is settled properly.

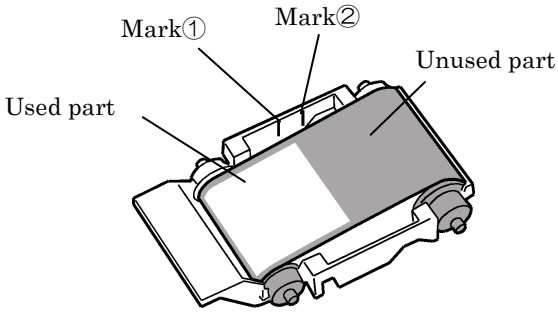

When would reset the ink ribbon once used, make sure that the boundary of used part and unused part is settled according to the Mark① of ribbon cassette.

⚠ Be careful to do not get any dust, etc. on the ink ribbon.

3. Place the ribbon cassette to the printer.

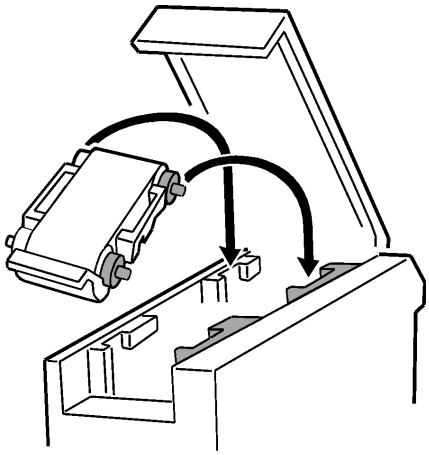

Remove any slack in the ribbon before setting.

（How to take out the ribbon cassette）

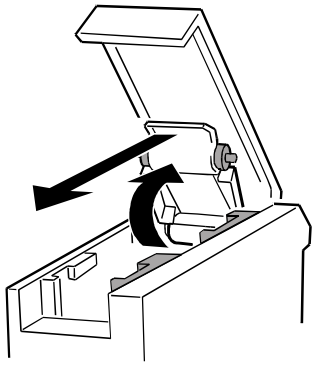

4. Close the upper unit.

Setting Card

1. Push the card set unit Open Button, and draw out the card set unit.

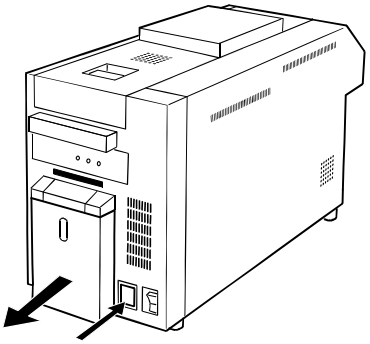

2. Place the dust box to the card set unit.

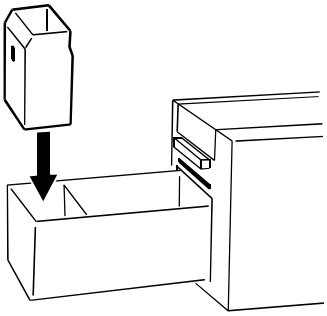

Empty the dust box if there is any cut chip in.

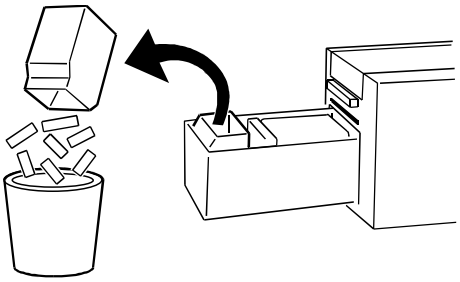

3. Remove only the underside of the card packing film.

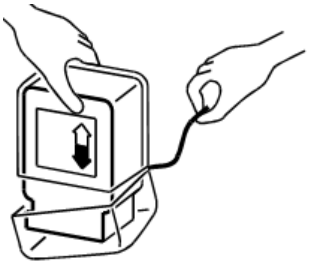

4. Pull the blue lever and set the card. The side which will be printed first need to be settled first print side should be on

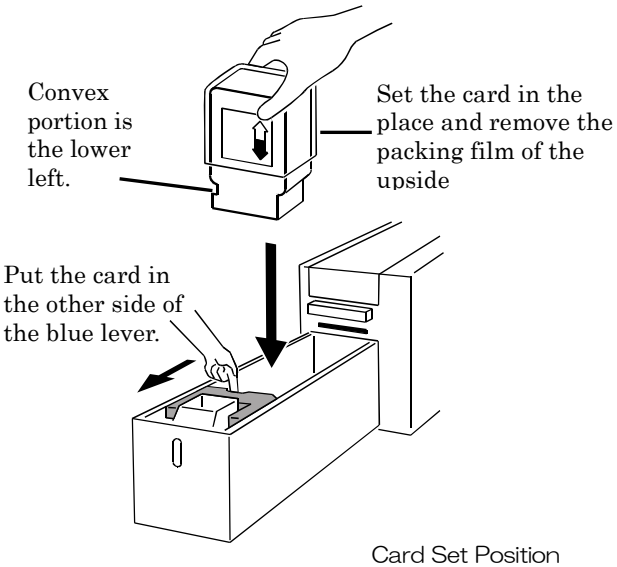

Card Set Position

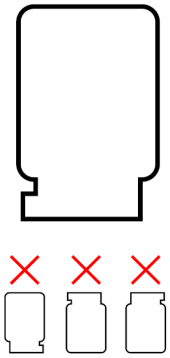

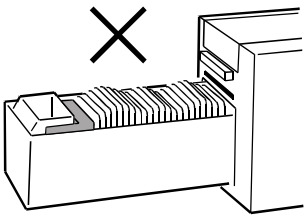

Arrange the card in a straight line

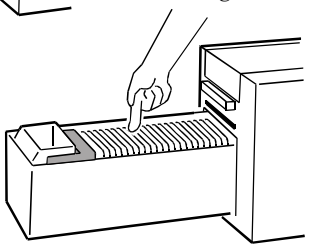

Do not touch the printing surface (white side) by finger. Be careful not to get any dust, etc. on the card.

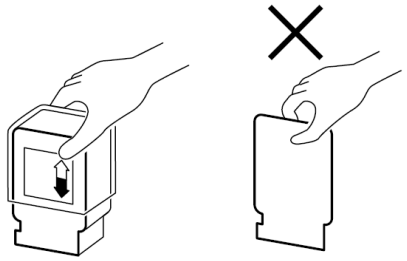

5. Close the card set unit.

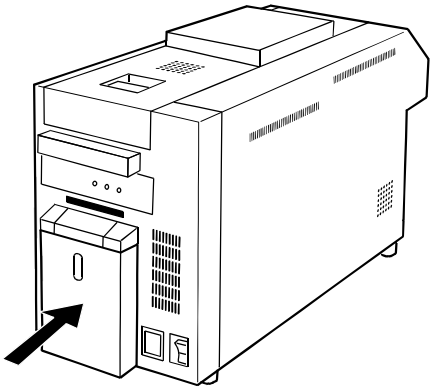

Transporting the Printer

The following cautions are necessary in transportation of the printer.
Since an incorrect transportation method causes a printer fault, follow the correct method.

1. Remove the ink ribbon and card from the printer before transporting the printer.
   If the ink ribbon or card cannot be removed due to a fault, consult with the distributor.

2. Use a genuine box.
   If the box used at the purchase cannot be used, consult with your distributor and purchase a new box.

How to Print

Follow the instruction manual of your computer or application software.
Warranty for the print result is not covered.

Chapter 3. Routine Maintenance

Caution: Make sure that the power is turned off before starting cleaning.
Thermal Head reaches high temperature just after printing. Do not touch directly by hand. Make sure that the thermal head has been sufficiently cooled down before starting cleaning.
When fingerprint stick to the heat element, it can damage the Thermal Head. Do not touch directly by hand.
Be careful not to be hurt by the projections of the printer.

Cleaning of Thermal Head, Platen, and Cleaning Roller

By using thermal transfer technology, daily maintenance is not really necessary if the printer is being used properly.
However, in order to keep the best print quality, it is recommended to do the cleaning of Thermal Head, Platen, and Cleaning Roller once in a month.

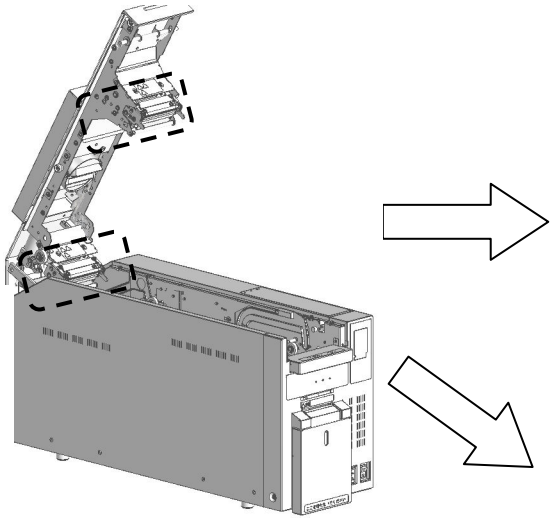

1. Using gauze, clean the heat element (glass bar) of the thermal head with isopropyl alcohol or ethyl alcohol.

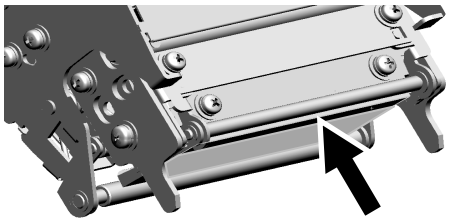

2. Using gauze dipped with isopropyl alcohol or ethyl alcohol, clean the edge of the peeling roller.

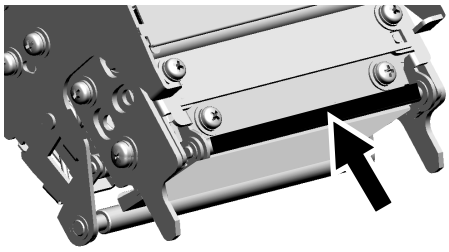

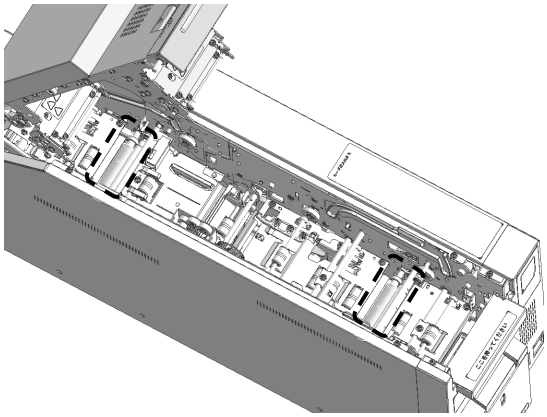

3. Using gauze dipped with isopropyl alcohol or ethyl alcohol, clean the rubber section of the platen roller.

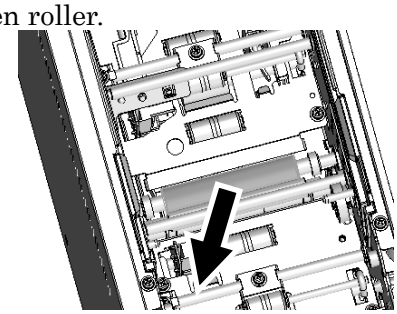

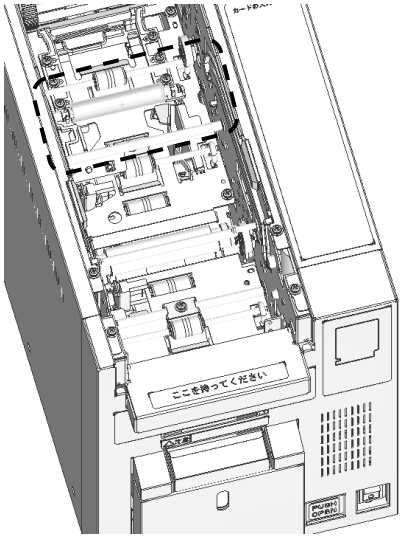

4. Using gauze dipped with isopropyl alcohol or ethyl alcohol, clean the rubber section of the cleaning roller

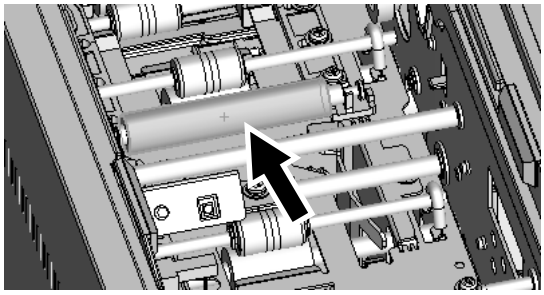

Attention: Printing should be performed after the alcohol dried up completely (approx. 5 minutes)

Chapter 3. Routine Maintenance

Cleaning of Outer Cover

Wipe the printer outer cabinet with a soft cloth.
If the stains are not removed, wet the cloth and apply weakened neutral Detergent to it.

> Warning: In case, the foreign substance get into the printer, turn off the power of printer, remove the power cable and contact the dealers or service center. Continuous use of the printer under such condition may cause fire or electric shock.

> Warning: Continuous use under the abnormal condition such as high temperature, smoke and strange smell can cause the fire and electric shock. Turn off the power and make sure to remove the power cable, then contact the dealers or service center.

> Caution: Do not use volatile solvents or spray insecticide on the printer outer cabinet. Otherwise, discoloration or crack may result.

Cleaning of Filter

If the dust collects on the openings, clean it with vacuum cleaner

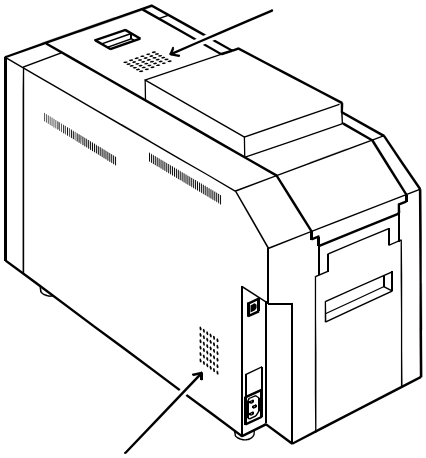

Chapter 4. Error Handling

Printer Status lamps

The details of the error can be confirmed with the printer status lamps.

Printer Status Lamps and Card Setting Lamp display ●:on、○:off、＊:flashing

LED Display			Status	Corrective Action
POWER	MEDIA	ERROR		
＊	○	○	The printer is processing.	Wait until the operation is completed.
●	○	＊	The card set unit or the upper unit are opened.	Close the card set unit or the upper unit.
●	○	●	Card jam occurred.	Remove the card. If card jam occurs frequently, consult with the service center.
			Trouble of printer control board. The printer mechanical section is faulty.	If it occurs frequently, consult with the service center.
●	＊	●	The ink ribbon set is not supported.	Ink ribbon or printer abnormality is assumed. Consult with the Service Department.
●	●	●	Dust box is full.	Empty the dust box.
			The card is not set. Card empty.	Set the card.
			The ink ribbon is not loaded. Ribbon empty.	Set the ink ribbon. Replace the ink ribbon.
●	＊	○	The ink ribbon initial process is executed.	Wait until the initial processing is complete.

Chapter 4. Error Handling

Failure Symptoms

When detecting a failure symptom, check the printer using the following table.

Symptom	Action
Power is not turned on	• Check if the power cable is connected to the plug socket or the printer.
The computer does not recognize the printer.	• Check if the USB cable is connected to the personal computer or printer.
The printer does not become ready.	• Check if the card set unit and the upper unit are closed. • Check if card is jammed in the printer.
The card set unit does not open.	• Check if the printer is installed in a flat location. • Check if any object is placed in front of the front cover.
A straight stripe area is not printed.	• The thermal head may be dirty. Clean the thermal head as described in Chapter 3, "Routine Maintenance". • If the blank area remains after cleaning the thermal head, the head may have been disconnected. Consult with the Service Department.
Dotted areas are not printed.	• The cleaning roller may be dirty. Clean the thermal head as described in Chapter 3, "Routine Maintenance".

Card Jam

1. Open the card set unit and remove the ribbon cassette.

2. Confirm the card jamming position and remove the card according to the following procedure.

> ⚠ Warning: When removing the card do not pull the card strongly not to be injured by the part of the printer.

> ⚠ Warning: Please do not reuse and abrogate the removed card. It may cause card jam or printer damage.

> Attention: If it occurs frequently, consult with the service center.

（When there is a card around the center of the printer, and it is with vertical as shown in the following figure:）

*Turn the knob②(green) of the left side of the printer, move the card to the upper and pull it to upward and remove.

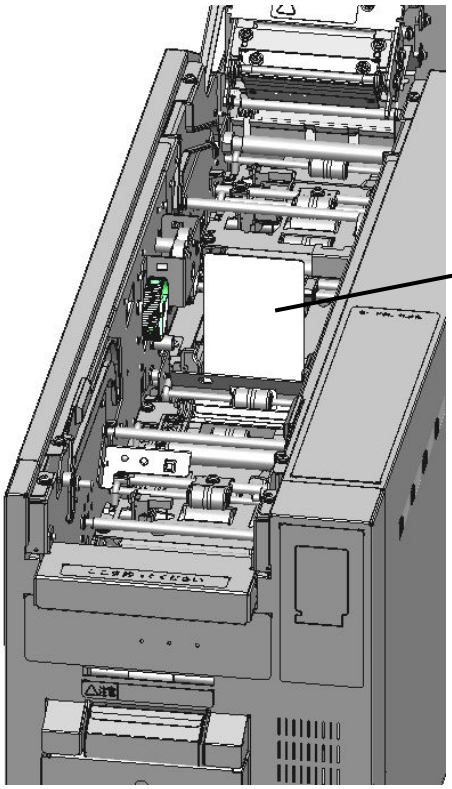

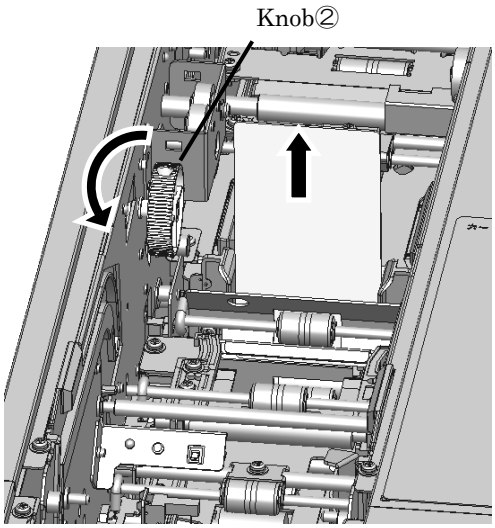

（When there is a card around the printer center, and it is horizontal as shown in the figure.）

1) Turn the knob② (green) of the left side of the printer, move the card to the front side.

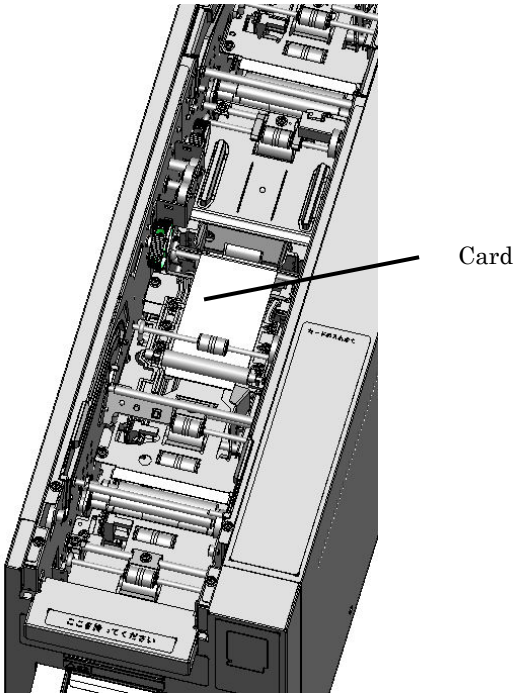

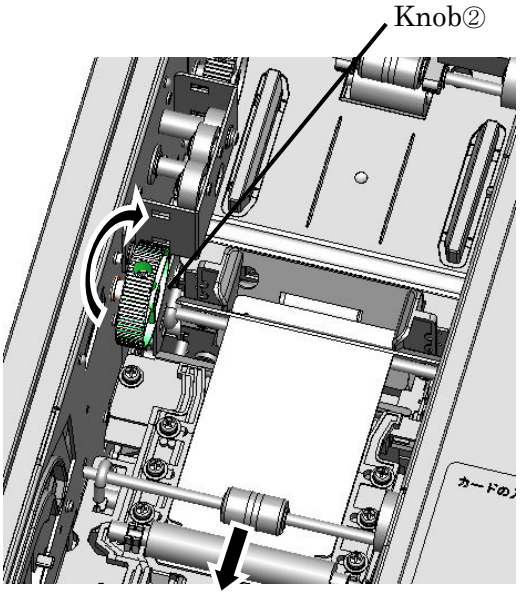

2) If the card move to the position shown in the following figure, pick up the top of the card and pull it up (as tilt it slightly forward), and remove it.

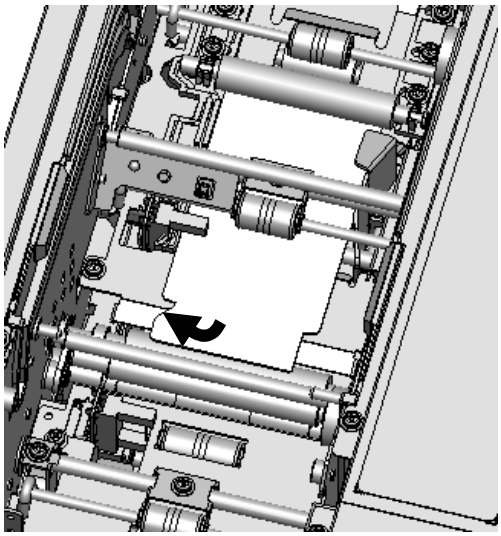

（When the card is in the front part of printer）

1) Move the card by finger to the position shown in the following figure.

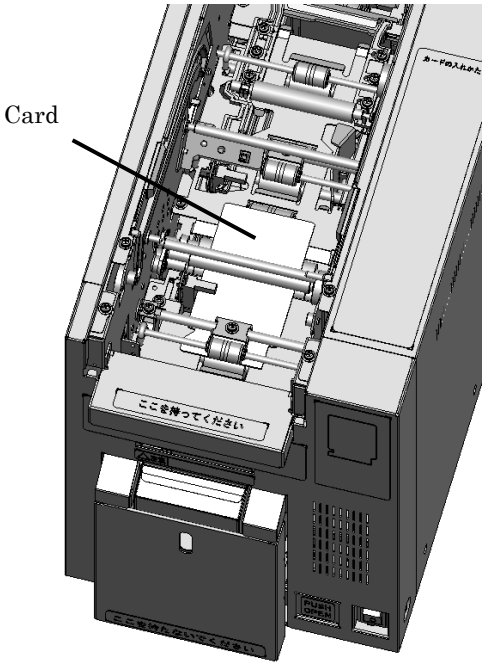

2) If the card move to the position shown in the following figure, pick up the end of the card and pull it up (as tilt it slightly backward), and remove it.

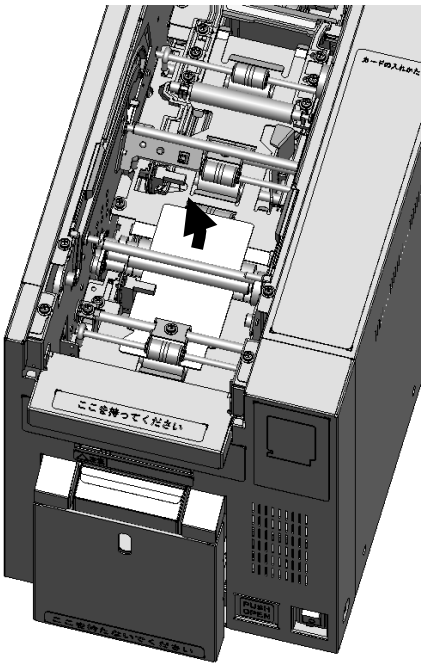

(When the card is at the discharge port side)

1) Turn the knob② (green) on the left side of the printer, move the card to the front side.

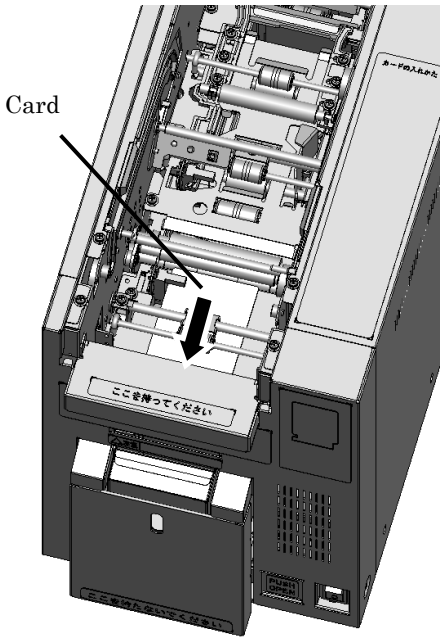

2) When the card is discharged from the port, pull the card from front, and remove it.

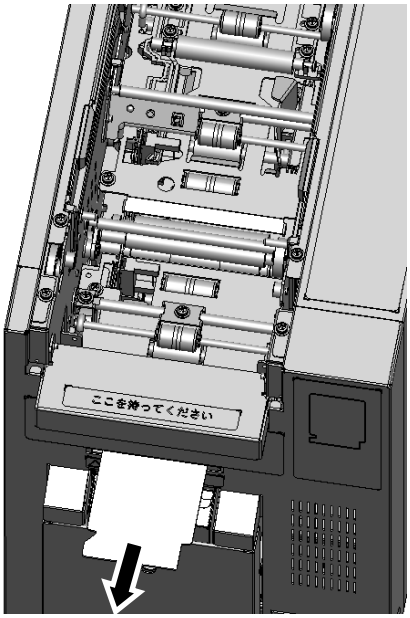

(When cannot see the card)

1) Turn the knob② (green) in the direction shown in the following figure. Turn the knob② for a while(about 5 turns), then when the card appears as follow figure, pull it up, and remove it.

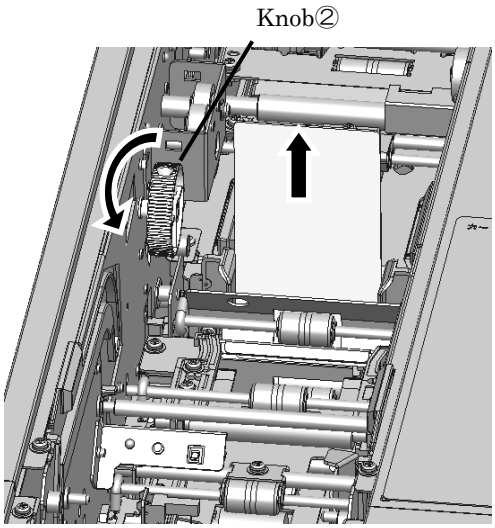

2) If you keep turning the knob② but the card does not appear, draw out the card set unit.

3) When the tip of the card is appearing a little from the gate, pull it up, and remove it.

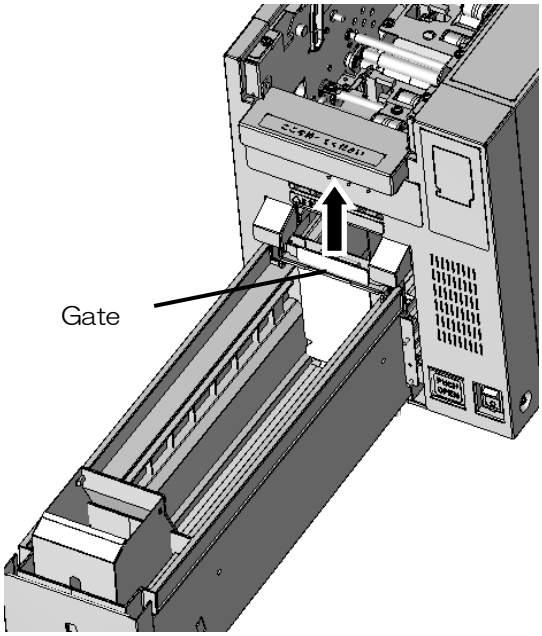

4) When the tip of the card is not appearing, close the card set unit and turn the printer power off. Turn the printer on again and restart printing.

(When the card is at back side of printer)

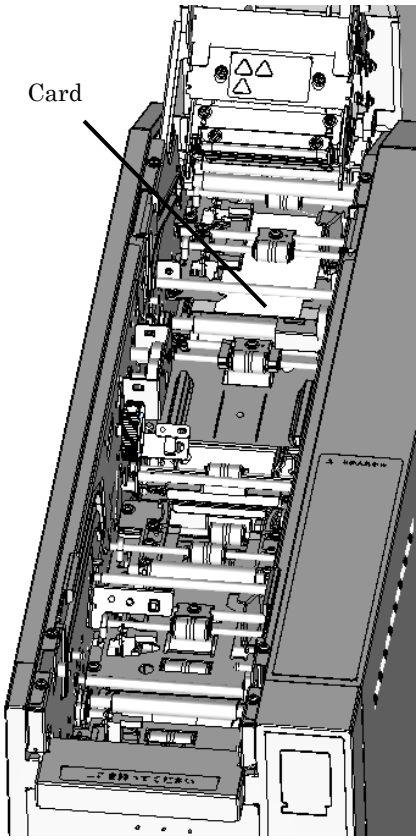

1) Turn the knob① (green) of the left side of the printer, move the card to the front side.

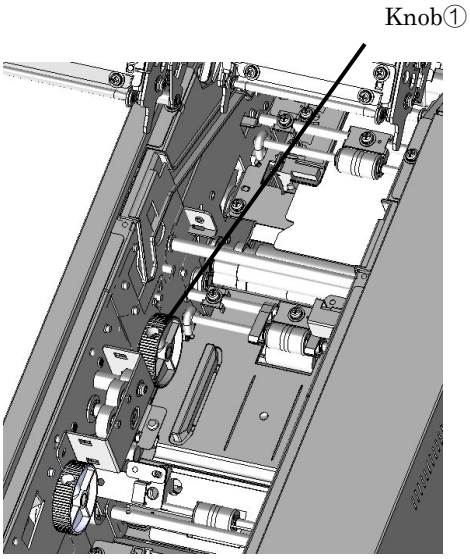

2） Turn the knob① and when the card do not move anymore, Move the card by finger to the position shown in the following figure.

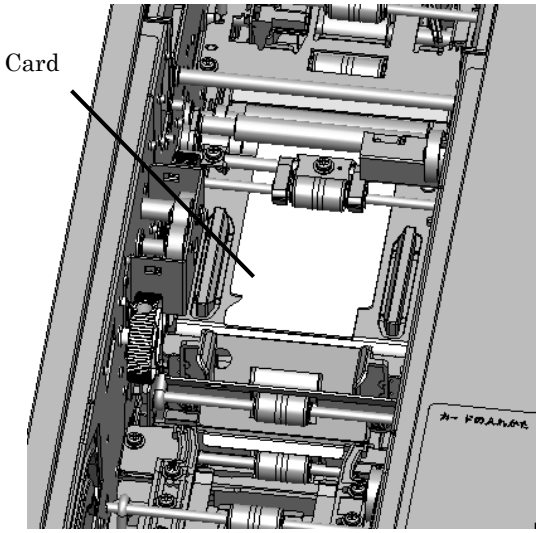

3） When the card move to the position shown in the following figure, pick up the top of the card and pull it up (as tilt it slightly forward）, and remove it.

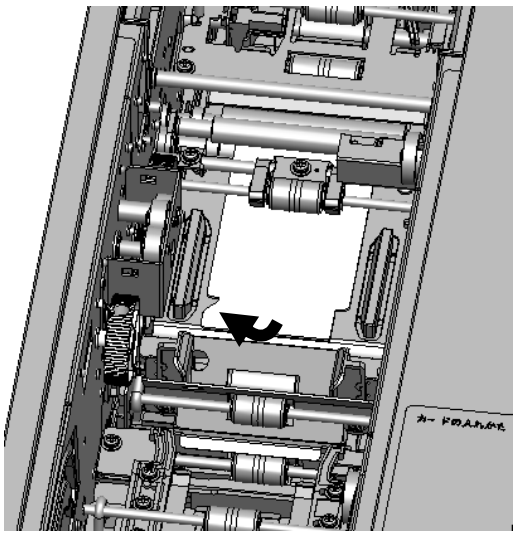

（When the card is hold on the upper unit）

1） When the card tip is out of the gate as the following figure, pull it down, and remove it.

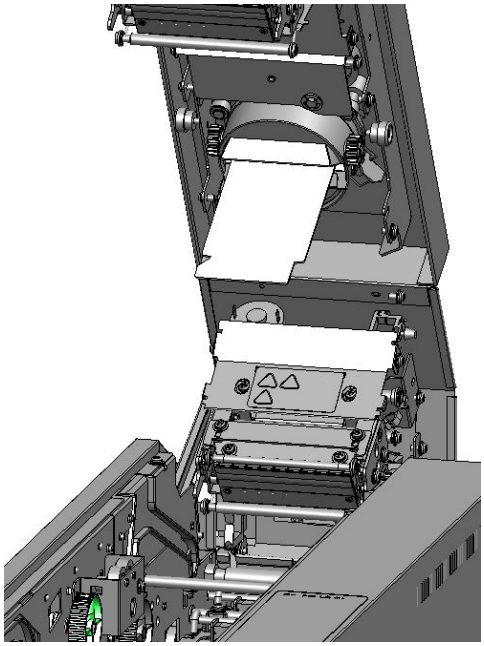

Power Supply Interrupted during Printing

In the case power supply is interrupted during the printing, Thermal Head will be kept pushing to Platen roller. Leaving this situation for a long time, the shape of Platen roller may be warped. In order to avoid this situation, please follow the instruction below.

1. Turn off the power of the printer.

2. Turn on the power 1 minute or more after turning off the power.

3. When card Jam is displayed on the printer status lamps, open the front cover and take the necessary action according to the instruction provided in 4-3, "Card Jam".

When the Ribbon is snapped

1. Remove the ink ribbon.

2. Stick the broken part of the ribbon with a tape.

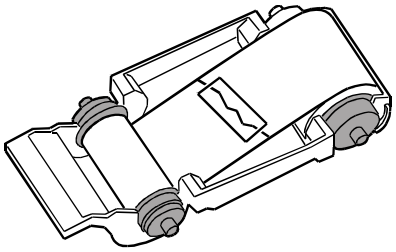

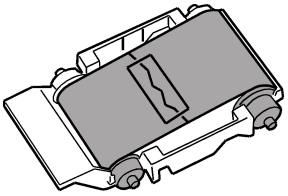

3. Turn the ribbon on the winding side and rewind the taped section completely.

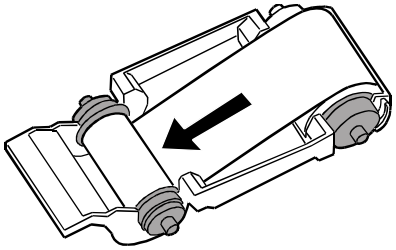

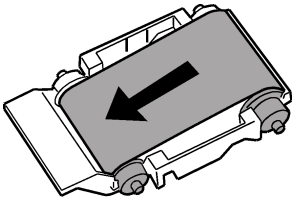

Chapter 5. In order to more comfortably use

For longer Printer usage

⚠	Caution: Printing continuous pattern of high density image in limited part may cause uneven density print. Recommend not to print those images continuously.

For the Customers in the U.S.A.

FCC CAUTION Changes or modifications not expressly approved by the party responsible for compliance could void the user's authority to operate the equipment.
Note: This equipment has been tested and found to comply with the limits for a Class A digital device, pursuant to part 15 of the FCC Rules. These limits are designed to provide reasonable protection against harmful interference when the equipment is operated in a commercial environment. This equipment generates, uses, and can radiate radio frequency energy and, if not installed and used in accordance with the instruction manual, may cause harmful interference to radio communications. Operation of this equipment in a residential area is likely to cause harmful interference in which case the user will be required to correct the interference at his own expense.

After-sales Service

Contact your dealers or service center for the details about after-sales service.

YTE8-J0701
Prepared date : July 4, 2018
Revision date : -
Revision Number : First edition

SINFONIA TECHNOLOGY © 2018 SINFONIA TECHNOLOGY CO., LTD.