SINFONIA

English

Digital Photo Printer

Color Stream CS3

CS360

Operation Manual

SINFONIA TECHNOLOGY CO., LTD.
http://www.sinfo-t.jp

Handling of this Manual

1. All rights reserved. No part of this operation manual covered by the copyright herein maybe reproduced or copied in any form or by any means, including translation, without the written permission of SINFONIA TECHNOLOGY Co., Ltd.

2. The specifications in this operation manual are subject to change without prior notice.

3. In case of having any difficulties or finding the fault in this manual, your information to SINFONIA TECHNOLOGY will be highly appreciated.

Introduction

This manual describes detailed instructions for handling of and basic operation of Digital Photo Printer CS360.
We will describe this product as “the printer” in the manual.
Read this manual thoroughly to understand how to install and operate the printer before using it.

Notice

- Keep this manual near the printer and operators can refer to this manual periodically.
- In case, lost or damaged this manual, contact your dealers.
- In the case of transfer, do not forget to put this manual together with the printer.

CONTENTS

PREFACE

Chapter 1. Important Safety Instruction 1-1
Environments 1-1
Handling Instruction 1-2
Handling Instruction for Consumable and Printed Output 1-3
For the Customers in the U.S.A. 1-4
For the Customers in the Canada 1-4

Chapter 2. Installing and Set Up 2-1
Unpacking and Checking the Accessories 2-1
Parts Name and Function 2-2
Printer Status Lamps Name and Printer Status 2-3
Connecting Power Cable 2-4
Connecting USB Cable 2-4
Loading Paper 2-5
Setting Ink Ribbon 2-6
Transporting the Printer 2-7

Chapter 3. Routine Maintenance 3-1
Cleaning of Thermal Head, Platen 3-1
Cleaning of Outer Cover 3-2
Cleaning of Filter 3-2

Chapter 4. Error Handling 4-1
Printer Status Lamps are displayed in red 4-1
Failure Symptoms 4-1
Paper Jam 4-2
Power Supply Interrupted during Printing 4-2
When the Ribbon is snapped 4-2

Chapter 5. In order to more comfortably use 5-1
For longer Printer usage 5-1

Specification 6-1
After-sales Service 6-2

Chapter 1. Important Safety Instruction

This manual provides detailed instructions for the safety use of the printer.
Read this manual before operating the printer to ensure to have proper use.

◆In this manual, there are notes that require special attention.
◆For your safety operation, Safety notices are separated as follows;

Warning: Inappropriate handling can cause the death or serious wound.

Caution: Inappropriate handling can cause the wound for the users and/or cause the physical damage.

Attention: Explanation about the cause of the trouble and the environmental condition.

◆It is difficult to forecast all the danger in setting and use of the printer.
Therefore, warnings in this Operation Manual, in the other documents on the printer cannot cover all the cases.
In case of performing the operation or maintenance which are not described in this manual, all the concern for the safety have to be taken care of at the customer side.
◆Operations and the notification for the maintenance described in this manual and other documents are for the proper use of the printer.
In case of using the printer for the other purpose, all the concern for the safety has to be taken care of at the customer side.
◆Do not perform the operation which are prohibited in this manual and other documents.
◆The contents that cannot be printed due to a failure while using the use of this printer are not guaranteed.

Environments

To use the printer safety, please pay attention to the followings:

Caution: Do not let children to touch the printer or the cables.
It can cause accidents or electric shock.

Caution: Do not place the printer under humid or dusty place.
It can cause a fire, electric shock or printer problem.
Do not place the printer with dust, sand and high humidity such as bathing place, bathroom, hot spring, on the street.

Caution: Do not place the printer on rickety place and/or inclined place.
Printer may fall down or tumble and it can cause injury.

Warning: Do not insert or fall the metallic items or flammable items into the printer through the openings of the printer, it can cause the fire and electric shock.

Warning: Do not put any containers such as a vase with water or any metal objects on the top of the unit, and make any pressure from the top.
If the pressure is made, the top surface may be bent and any damage or injury may happen.
If something goes inside the printer, there is a danger/risk for fire or electric shock.

Warning: Do not block the openings of the printer. In case, the opening blocked, the heat will remain inside and it can cause the fire.

Warning: This equipment is not suitable for use in locations where children are likely to be present.

Attention: Do not place the printer under the low temperature such as ski resort, skating rink or open-air with direct sunlight.

Chapter 1. Important Safety Instruction

Handling Instruction

In handling the printer, please pay attention to the followings;

Warning: Lift the printer from its box and put it onto a flat table or desk.

Warning: At nearly 15Kg, the printer is too heavy to be lifted by one person.
Also please take a good care of your hands and fingers when lifting the printer from the box.

Warning: Be careful when you transport the printer on the slippery floor.

Warning: In case you drop the printer, firstly turn off the power of the printer and remove the power cable, then contact the dealers or service center. To use the printer without any checking, can cause the fire or electric shock.

Warning: Secure the power cable firmly.

Warning: This equipment is required to be connected to electricity mains socket that has grounded (three-prong).Always used the three-prong power cable that has grounded.
If the product is used without ground, and current leakage occurs, fire or electrical shock is most likely to result, and also cause signal-receiving interference to a radio, a television receiver, and other similar electric appliances.
If the proper grounding connection is not possible, please contact to the dealers or service

Warning: Do not attempt to service the printer beyond the instruction specified in this document. In case, impossible to recover from the problem, please contact to the dealers or service center.

Warning: The thermal head reaches high temperature during operation but this is normal. Do not touch the thermal head.

Avertissement:La tête d'impression thermique devient chaud, mais ce n'est pas un dysfonctionnement lors de l'utilisation.Ne touchez pas la tête, sa température peut devenir très chaud.

Warning: Do not dismantle or remodel the printer.
Some sections of the printer contain a high voltage or become very hot. Ignoring this warning may cause electric shock, fire, or burns.

Attention: Touching the surface of the thermal directly can cause the damage to thermal head. When a hard object get into the printer, it can cause the damage to the printer mechanism. In such case, please do not use the printer.

Attention: At installation, appropriate interface cable will be required with your computer.

Handling Instruction for Consumable and Printed Output

In handling the ink ribbon, paper and printed output, please pay attention to the followings;

Attention: Paper Handling
- Use the paper specified by SINFONIA TECHNOLOGY.
- Store the paper flat.
- Store the paper in a dry and dark place to avoid the direct Sunlight. (Temperature less than 30°C, Humidity less than 60%).
- Do not touch the paper surface before

Attention: Ink Ribbon Handling
- Use the ink ribbon specified by SINFONIA TECHNOLOGY.
- Store the ink ribbon in cool place to avoid the direct sunlight. (Temperature less than 30°C, Humidity less than 60%)

Attention: Printed Output Handling
- Store the printed output in a dark place to avoid the direct sunlight.
- Store the printed output away from the organic fluid such as benzene, thinner and alcohol which may change or deteriorate the colors.

Caution: When abandon the ink ribbon, please handle it as harmful industrial waste.

Caution: Be careful not to injure your hands with the paper edge when handling paper.

Chapter 1. Important Safety Instruction

For the Customers in the U.S.A.

FCC CAUTION
Changes or modifications not expressly approved by the party responsible for compliance could void the user's authority to operate the equipment.

Note: This equipment has been tested and found to comply with the limits for a Class A digital device, pursuant to part 15 of the FCC Rules. These limits are designed to provide reasonable protection against harmful interference when the equipment is operated in a commercial environment. This equipment generates, uses, and can radiate radio frequency energy and, if not installed and used in accordance with the instruction manual, may cause harmful interference to radio communications. Operation of this equipment in a residential area is likely to cause harmful interference in which case the user will be required to correct the interference at his own expense.

For the Customers in Canada

This device complies with Industry Canada's applicable licence-exempt RSSs. Operation is subject to the following two conditions:
(1) This device may not cause interference; and
(2) This device must accept any interference, including interference that may cause undesired operation of the device.
Le présent appareil est conforme aux CNR d'Industrie Canada applicables aux appareils radio exempts de licence.
L'exploitation est autorisée aux deux conditions suivantes :
1) l'appareil ne doit pas produire de brouillage;
2) l'utilisateur de l'appareil doit accepter tout brouillage radioélectrique subi, même si le brouillage est susceptible
d'en compromettre le fonctionnement.

Chapter 2. Installing and Set Up

This chapter explains the unpacking and set up of the printer.
Before proceeding to this chapter, please make sure to read Chapter 1. Important Safety Instruction.

Unpacking and Checking the Accessories

1.Open the box and remove the box containing the accessories and protection materials

Attention: Keep the packaging materials. The box and protection materials are necessary when moving or transporting the printer. Make sure that they are retained.

2.Take out the printer by holding dent at lower of the printer.

Caution: This printer weighs about 9Kg. Please handle it carefully.
When lifting the printer, always grip dent at lower on the left and right side of printer. Otherwise, the printer may be damaged.

3.Take out the accessories from the accessory box and check the contents.

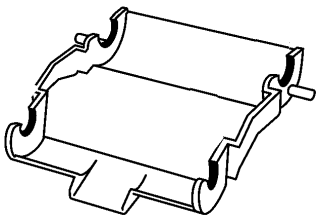

Ribbon Tray

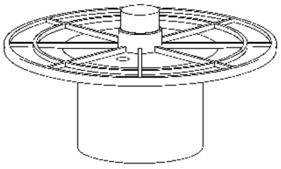

Paper Flange
(Gray)

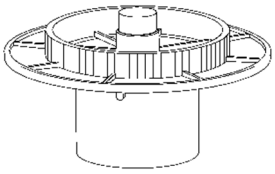

Paper Flange
(Blue)

Chapter 2. Installing and Set Up

Parts Name and Function

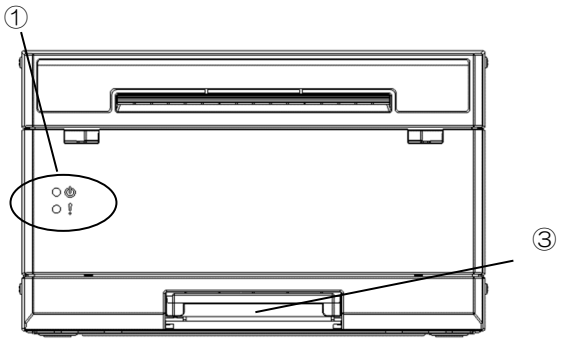

(Front View)

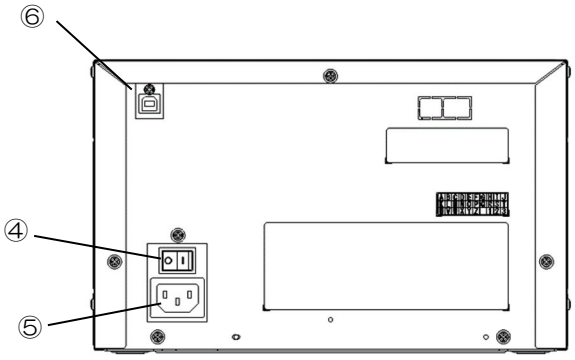

(Rear View)

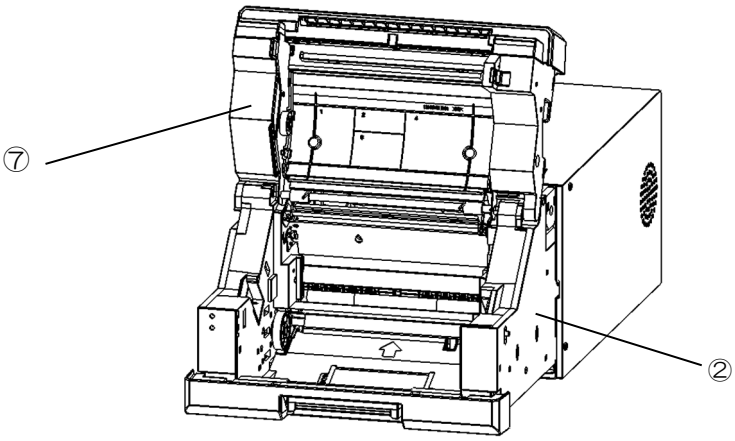

№	Name	Function
①	Printer Status Lamps	Printer status display lamps are located on the panel.
②	Drawer Unit	Open the drawer unit when replacing an ink ribbon or paper, or when performing maintenance.
③	Drawer Lever	When open the drawer unit, hold this lever.
④	Power Switch	This switch turns on/off the power of the printer. When the "|" marked side of the switch is pressed, the power is turned on. When the "○" marked side of the switch is pressed, the power is turned off. <Caution> Once the printer is turned off, wait at least 3 seconds before turning it on again.
⑤	Power Connector	To be used to connect the power cable.
⑥	USB Connector	To be used to connect the USB cable.
⑦	Open Guide Unit	Open the drawer unit when replacing paper, or when performing maintenance.

Printer Status Lamps Name and Printer Status

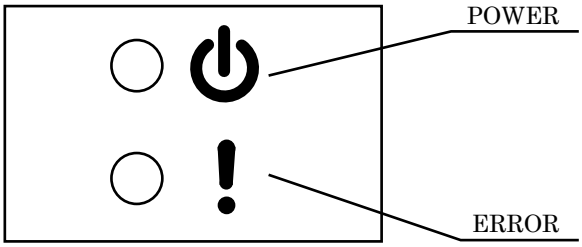

Grupe	LED Display		Description
	POWER	ERROR	
-	○	○	The power of printer is off.
1	*	○	The printer is initializing after turn on the power, or the thermal print head is cooling / heating during printing.
	●	○	The printer is ready.
2	●	*	The paper is empty, or the paper is not loaded.
			The ink ribbon is empty, or the ink ribbon is not installed.
			The ink ribbon loaded is not supported.
	●	X	The printer could not take up the ink ribbon.
			Paper jam is occurred.
	*	*	The drawer unit is opened.
3	●	●	Trouble of printer control board.
	*	●	The printer mechanical section is faulty.

●: ON ○: OFF ✱: Blink (Slow) X: Blink (Flashing)

Group1
The printer is initializing, ready or printing.

Group2
The paper or the ink ribbon is empty.
Paper jam occurred.
The front cover is opened.

Group3
Trouble of printer.
If it occurs frequently, consult with the service center.

Attention : When checking the PAPERSET LED, please remove the ribbon. Depending on the ribbon, it may look different from LED

Chapter 2. Installing and Set Up

Connecting Power Cable

Insert the power cable attached to the printer into the power connector located on the rear of the printer.

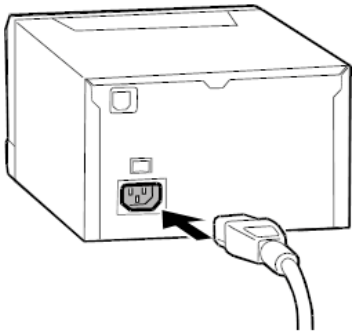

Warning: Make sure to turn off the power of the printer before inserting the power cable.

Warning: Make sure to insert the power cable correctly. If not, it can cause the fire or the printer problem.

Warning: Do not insert or remove the power cable with wet hands. It can cause the electric leakage.

Warning: Do not make any damage or any modification to the power cable. Put the heavy items on the power cable, give a strong pull to the power cable and twist the power cable can cause the fire and electric shock.

Warning: When moving the printer, make sure to turn off the power of the printer, remove the power cable in order to have no connection with other devices. Otherwise, the power cable might be damaged and it can cause the fire and electric shock.
Also there is a possibility to fall down caught by the cable.

Warning: In case of not using the printer for a long time, remove the power cable for safety.

Warning: Avoid “piled up” connection. It can cause the fire and electric shock.

Connecting USB Cable

Connect the USB cable from the personal computer to the USB connector located on the left rear side of the printer.
Be sure to insert the USB cable all the way.

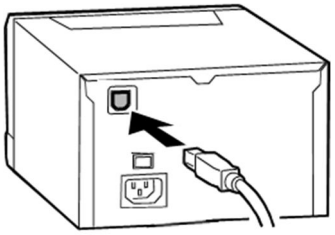

Attention: To remove the USB cable, make sure that the printer is in the waiting status.
Removing the USB cable during data transfer may not be able to print data correctly.

Loading Paper

Turn on the power of the printer by pressing "|" on the power switch.

1. Carefully lift the drawer lever and pull the drawer unit.

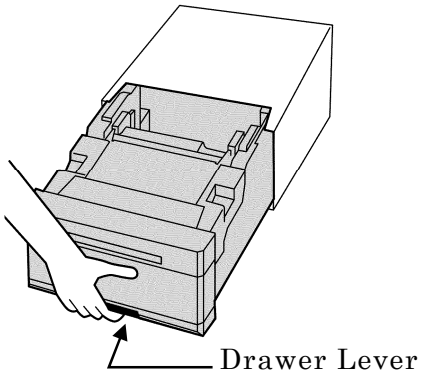

Attention: Do not open the drawer unit quickly or with unnecessary force.
Do not press the drawer unit or place a heavy object other than paper after opening the drawer unit.

2. Open the open guide unit.

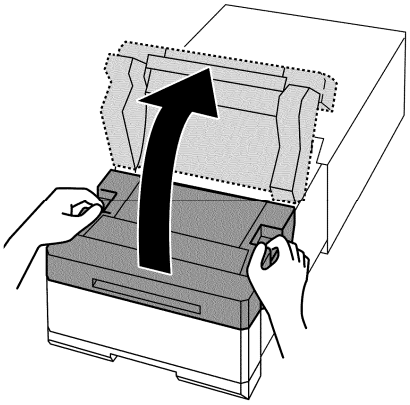

3. Remove dust box. In case that trim dusts are stacked in the dust box, make sure to throw them away.

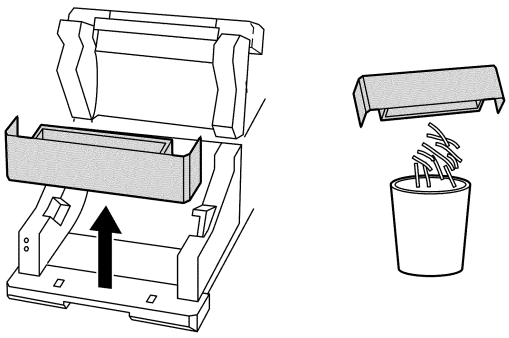

4. Install the paper flange (blue) and paper flange (gray) in the paper.

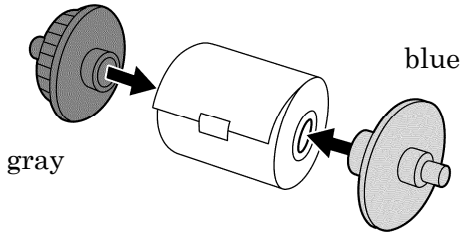

Caution: The paper is not set correctly if there is a gap of about 10mm between the paper flange and paper.

5. Set the paper in the printer.Set the paper by matching the color of the paper flange and the color of the holder.After setting the paper, remove the seal from the paper.

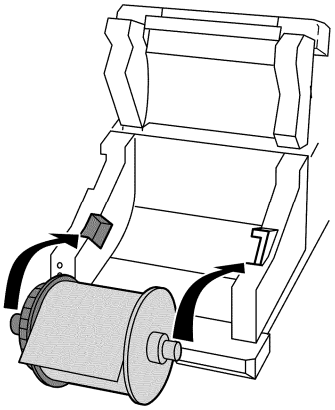

6. Insert the edge of paper under the guide roller by rotating the paper flanges.
Insert the paper until the buzzer sounds.

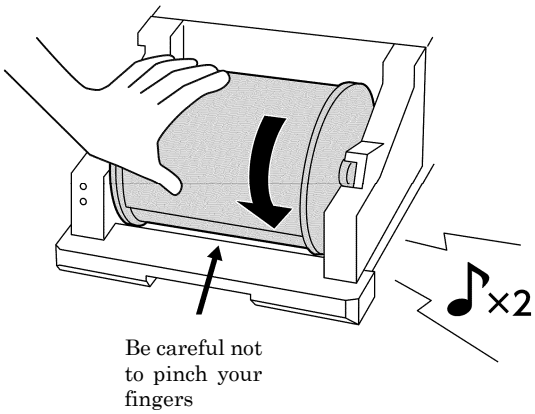

7. Close the open guide unit. When closing the open guide unit, press the center of the open guide unit.

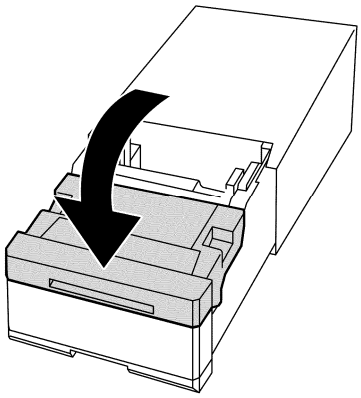

Setting Ink Ribbon

1.Set the ink ribbon in the ribbon tray.

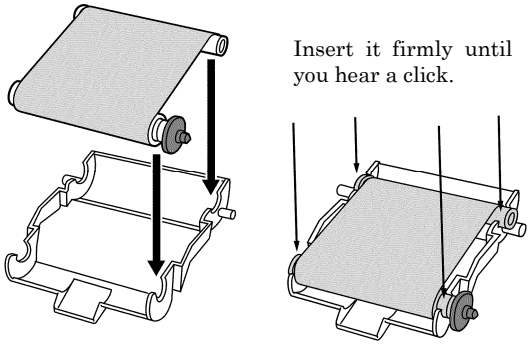

Set the ink ribbon in the ribbon tray by pushing it into the recess until you hear a click.

Caution: Make sure that no dust or foreign matter adheres to the ink ribbon.

2. Set the ribbon tray in the printer.

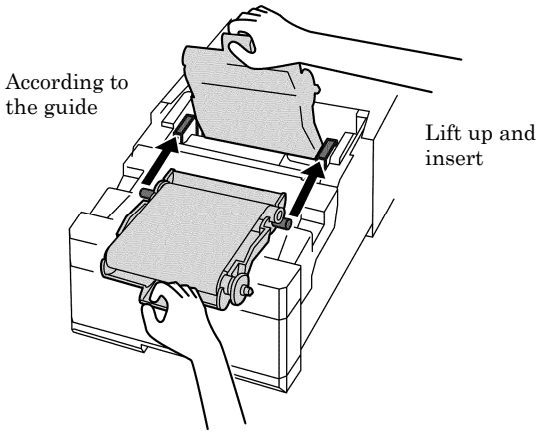

3. Close the drawer unit.
When the drawer unit is closed, initialization starts and four sheets of paper are ejected automatically.

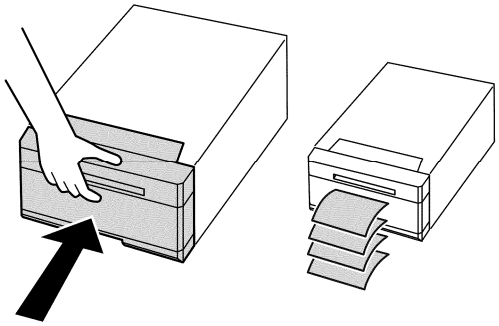

Caution: Close the front cover carefully so as not to catch your fingers.
Close the drawer unit and later to close the open guide unit.

Transporting the Printer

The following cautions are necessary in transportation of the printer.
Since an incorrect transportation method causes a printer fault, follow the correct method.

1. Remove the ink ribbon and paper from the printer before transporting the printer.
   If the ink ribbon or paper cannot be removed due to a fault, consult with the distributor.

2. Use a genuine box.
   If the box used at the purchase cannot be used, consult with your distributor and purchase a new box.

Chapter 3. Routine Maintenance

Cleaning of Thermal Head, Platen

By using thermal transfer technology, daily maintenance is not really necessary if the printer is being use properly.
However, in order to keep the best print quality, it is recommended to do the cleaning of Thermal Head and Platen once in a month.

> ⚠ Caution:Make sure that the power is turned off before starting cleaning.
> Thermal Head reaches high temperature just after printing. Do not touch directly by hand. Make sure that the thermal head has been sufficiently cooled down before starting cleaning.
> When fingerprint stick to the heat element, it can damage the Thermal Head. Do not touch directly by hand.
> Be careful not to be hurt by the projections of the printer.

Using gauze, clean the heat element (glass bar) of the thermal head with isopropyl alcohol or ethyl alcohol.

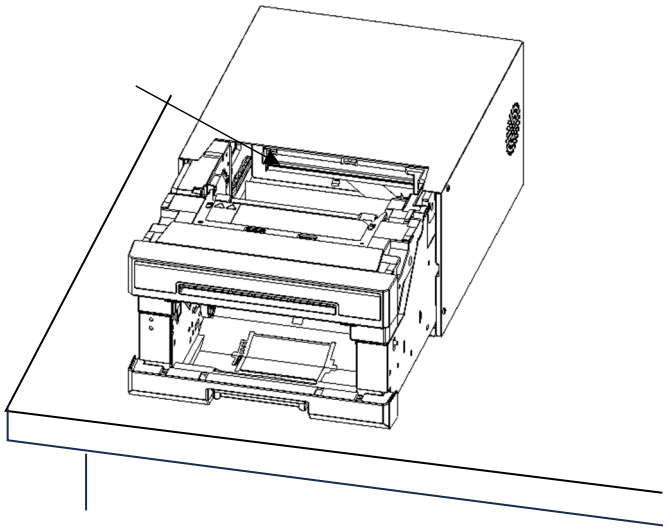

Using gauze dipped with isopropyl alcohol or ethyl alcohol, clean the edge of the peeling roller.

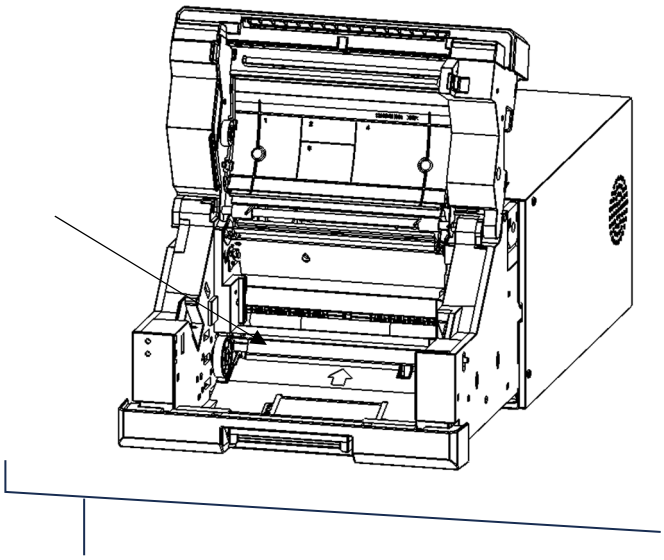

Chapter 3. Routine Maintenance

Cleaning of Outer Cover

Wipe the printer outer cabinet with a soft cloth.
If the stains are not removed, wet the cloth and apply weakened neutral Detergent to it.

Warning:	In case, the foreign substance get into the printer, turn off the power of printer, remove the power cable and contact the dealers or service center. Continuous use of the printer under such condition can cause the fire and electric shock.
Warning:	Continuous use under the abnormal condition such as high temperature, smoke and strange smell can cause the fire and electric shock. Turn off the power and make sure to remove the power cable, then contact the dealers or service center.
Caution:	Do not use volatile solvents or spray insecticide on the printer outer cabinet. Otherwise, discoloration or crack may result.

Cleaning of Filter

If the dust collects on the openings, clean it
with vacuum cleaner

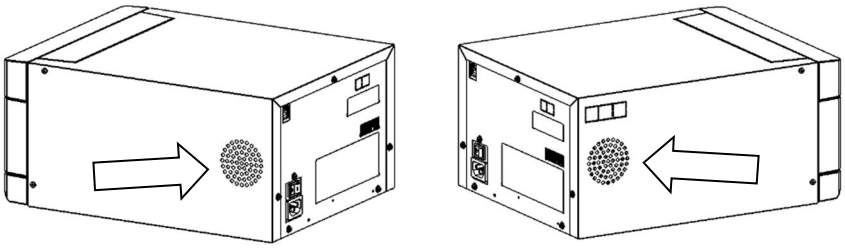

Chapter 4. Error Handling

Printer Status lamps are displayed in red

When the error happens, the details of the error can be confirmed with the printer status lamps.
Printer Status Lamps and Paper Setting Lamp display ●:on、○:off、*: Blink (Slow)
x: Blink (Flashing)

LED Display		Status	Corrective Action
POWER	ERROR		
*	*	The drawer unit is opened.	Close the drawer unit.
●	x	The printer could not take up the ink ribbon. Paper jam occurred.	Remove the paper. If paper jam occurs frequently, consult with the service center.
●	*	Paper is not set. Out of paper. The ink ribbon set is not supported. The ink ribbon is not loaded. Ribbon Empty.	Set paper. Replace paper. Check the type of ink ribbon and set the correct ink ribbon. Set the ink ribbon. Replace the ink ribbon
●	●	Trouble of printer control board.	If it occurs frequently, consult with the service center.
*	●	The printer mechanical section is faulty.	If it occurs frequently, consult with the service center.。

Chapter 4. Error Handling

Failure Symptoms

When detecting a failure symptom, check the printer using the following table.

Symptom	Action
Power is not turned on.	• Check if the power cable is connected to the plug socket or the printer.
The personal computer does not recognize the printer.	• Check if the USB cable is connected to the personal computer or printer.
The printer does not become ready.	• Check if the drawer unit is closed. • Check if paper is jammed in the printer. • When the paper setting lamp is blinking, remove the edge of the paper until the paper setting lamp goes off.
The drawer unit does not open.	• Check if the printer is installed in a flat location. • Check if any object is placed in front of the front cover.
A straight stripe area is not printed.	• The thermal head may be dirty. Clean the thermal head as described in Chapter 3, "Routine Maintenance". • If the blank area remains after cleaning the thermal head, the head may have been disconnected. Consult with the Service Department.
Dotted areas are not printed.	• The cleaning roller may be dirty. Clean the thermal head as described in Chapter 3, "Routine Maintenance".

Chapter 4. Error Handling

Paper Jam

1. Open the drawer unit.

2. Cut off the folded section or printed section with scissors.
   When the paper is folded inside of the printer, pull it out slowly.

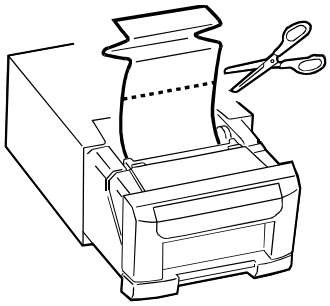

Attention: If the paper is can not pulled out to the Ribbon side, pull out it to the Roll paper side following the instruction in Step 3 and Step 4.
If the paper is pulled out to the Ribbon side by force, the printer may break down.

3. Open the open guide unit.

4. Pull out the paper.

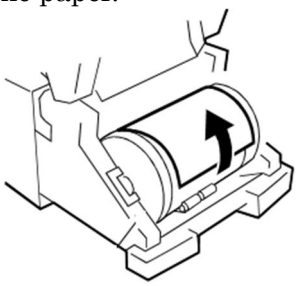

Attention: ・If the paper is used without cutting off the folded section or printed section, paper jam occurs again or the ink ribbon may snap during printing. Always cut off the creased section or printed section of the paper.
・Cut off the paper straight and at right angles to the roll paper direction.
・If paper jam occurs frequently, a defect in the mechanical section is assumed. Consult with the service center.

Power Supply Interrupted during Printing

In case, power supply interrupted during the printing, Thermal Head will be kept pushing to Platen. Leaving this situation for a long time, shape of Platen can be warped. In order to avoid this situation, please follow the instruction below.

1. Turn off the power of the printer.
2. Turn on the power for 3 or more seconds after turning off the power.
3. Paper Jam is displayed on the printer status lamps, open the front cover and take the necessary action according to the instruction provided in 4-2, "Paper Jam".

When the Ribbon is snapped

1. Remove the ink ribbon.

2. Stick the broken part of the ribbon with a tape.

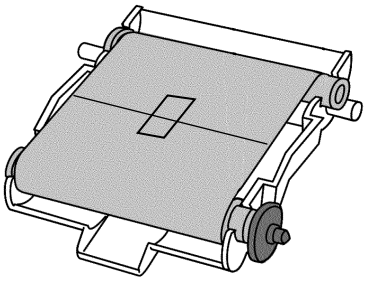

3. Turn the ribbon on the rewinding side and rewind the taped section completely.

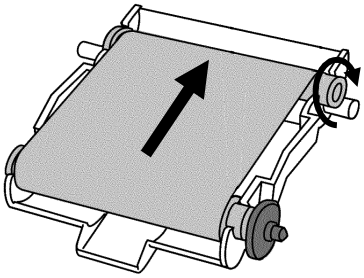

Chapter 5. In order to more comfortably use

For longer Printer usage

Caution: Printing continuous pattern of high density image in limited part may cause uneven density print. Recommend not to print those images continuously.

Specification

Product name			Color Stream CS3	
Model name			CS360	
Printing method			Dye sublimation thermal transfer	
Resolution	Width direction		12 dots/mm (300 dpi)	
	Paper feed direction	Normal	12 dots/mm (300 dpi)	
		High quality	24 dots/mm (600 dpi)	
Print sizes			51mm x 152 mm (2 x 6 size) 102 mm x 152 mm (4 x 6 size) 152 mm x 203 mm (6 x 8 size)	
Print media			Paper	152 mm (6 in.) width roll paper for print 400 sheets/roll (in case of 4 x 6 size prints) 200 sheets/roll (in case of 6 x 6 size prints)
			Ink ribbon	4 x 6 size ink ribbon 400 images/roll
				6 x 8 size ink ribbon 200 images/roll
Operating environment	Temperature		10 to 35 degrees C	
	Humidity		20% to 80% (RH) (There must be no condensation in both cases)	
Paper feeding			Roll paper feed (Roll to Cut method)	
Dimensions, with casters			Width,	272 mm
			Depth	348 mm
			Height	168 mm
Weight			9 kg or less (Excluding consumables and accessories)	
Power voltage			100 to 240 V AC (Automatic switching)	
Power consumption			Less than 1.8 A at 100 V AC Less than 0.9 A at 220 V AC	
Interface			USB 2.0	

The above specifications are subject to change without notice.

After-sales Service

Contact your dealers or service center for the details about after-sales service.

The manufacturer of this product is
SINFONIA TECHNOLOGY CO ., LTD.
1-1-30, Shiba-daimoncho, Minato-ku, Tokyo, Japan.

YTE8-J0837E
Prepared date : June 6, 2025
Revision date : -
Revision Number : 1

SINFONIA TECHNOLOGY

© 2025 SINFONIA TECHNOLOGY CO., LTD.