LCD KVM SWITCH

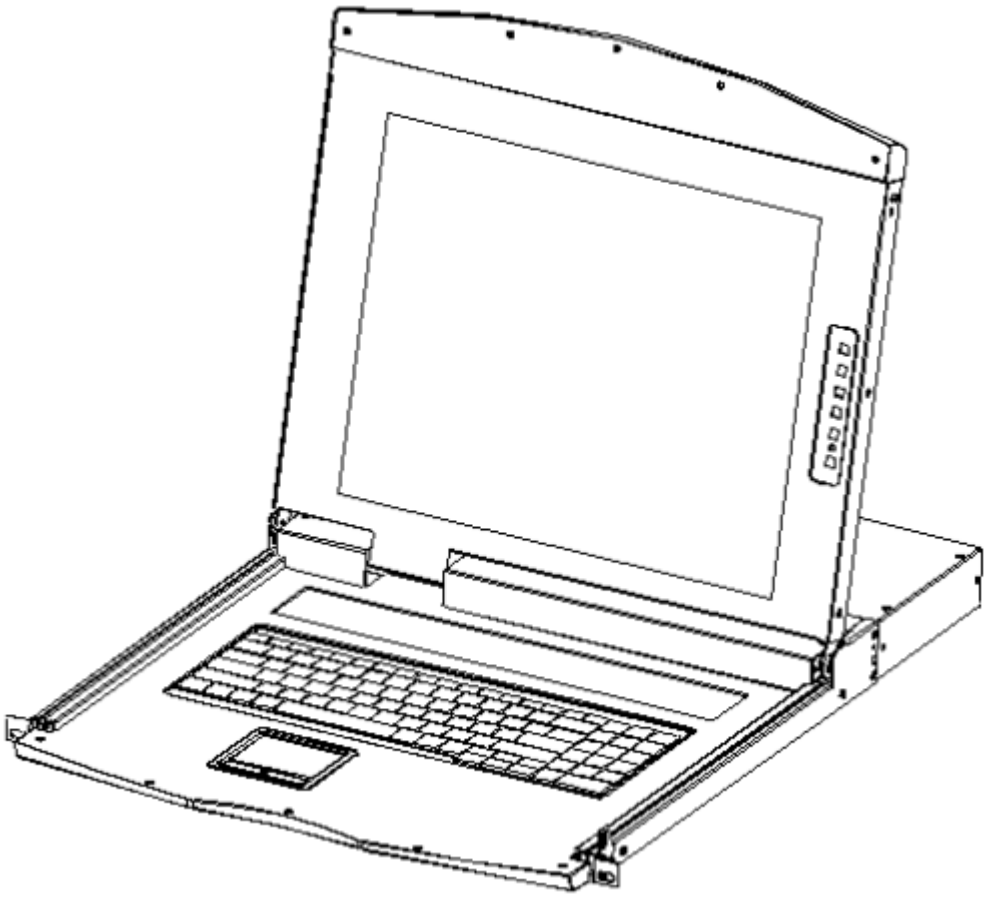

User Manual

Statement

United States Federal Communications Commission Interference Statement
This equipment has been tested and found to comply with the limits for a Class A digital device, pursuant to part 15 of the FCC Rules. These limits are designed to provide reasonable protection against harmful interference when the equipment is operated in a commercial environment. This equipment generates, uses, and can radiate radio frequency energy and, if not installed and used in accordance with the instruction manual, may cause harmful interference to radio communications. Operation of this equipment in a residential area is likely to cause harmful interference in which case the user will be required to correct the interference at his own expense.

FCC Warning: change and modify non-qualified party which is responsible for the equipment is made to void the user's authority to operate the equipment.
CE WARNING: This product is a Class A product. In a domestic environment, this product may cause radio interference, and the user may need to take appropriate precautions.

RoHS

This product is RoHS compliant.

User Precautions

The manufacturer has the right to modify and alter the information, documentation and specifications contained in this manual without prior notice. Manufactures makes no warranty, express, implied or statutory, disclaims or specifically disclaims it's possibility of sale and applicability for a particular purpose. The same applies to any sold and authorized manufacturer's software described in this manual. If the Software Program is found to be defective after purchase, the purchaser (and any non-manufacturer, its distributor or its purchaser) will be responsible for all necessary service, repair and any incidental or consequential damages resulting from the Software defect. The manufacturer is not responsible for any unauthorized interference with the radio or television caused by this equipment. The user must correct the interference personally.The manufacturer will not be liable for any damage resulting from incorrect selection of the operating voltage before operation. **Please be sure that the voltage has been set correctly before use.**

A typical LCD (liquid crystal display) has millions of pixels.A dead pixel is a defective pixel that does not display the correct color.On the screen, it usually looks like a tiny black or white dot, which can also be any other color.In the manufacturing process, even if a pixel on the tiny dust particles, or in the course of a slight impact during transport, may have a dead pixel.In the ISO 13406-2 specification, four categories of acceptable screen dead pixels are defined: the first is the best product, and the fourth is the worst.Almost all manufacturers use the second level as a guarantee of the product, allowing a certain number of dead pixels exist, such as more than the tolerance will change the screen.Since the manufacturer is of the opinion that this screen is permitted by the ISO specification, we are not responsible for the replacement or warranty of the TFT LCD panel.

Product Model Description

Single-rail Series

	Configuration instructions
AS-7100ULS	VGA Single portKVM,17inch 4:3 LED Monitor, No OSD Menu, Can be cascaded
AS-7100DLS	DVISingle port KVM,17inch4:3 LCD Monitor, No OSD Menu
AI-7100ULS	VGASingle portKVM,17inch4:3 LCD Monitor, No OSD Menu, Can be cascaded, IPRemote Control
AS-9100ULS	VGA Single portKVM,19inch4:3 LCD Monitor, No OSD Menu, Can be cascaded
AS-9100DLS	DVISingle portKVM,19inch4:3 LCD Monitor, No OSD Menu
AI-9100ULS	VGASingle portKVM,19inch4:3 LCD Monitor, No OSD Menu, Can be cascaded, IP Remote Control
AS-7104ULS	VGA 4Ports KVM ,17inch4:3 LCD Monitor, OSDMenu, Demountable Structure, Can be cascaded
AS-7104TLS	CAT5 4Ports KVM ,17inch4:3 LCD Monitor, OSDMenu, Demountable Structure, Can be cascaded
AS-7104DLS	DVI 4Ports KVM ,17inch4:3 LCD Monitor, OSDMenu, Demountable Structure
AI-7104ULS	VGA 4Ports KVM ,17inch4:3 LCD Monitor, OSDMenu, Demountable Structure, Can be cascaded, IP Remote Control
AI-7104TLS	CAT5 4Ports KVM ,17inch4:3 LCD Monitor, OSDMenu, Demountable Structure, Can be cascaded, IP Remote Control
AS-9104ULS	VGA 4Ports KVM ,19inch4:3 LCD Monitor, OSDMenu, Demountable Structure, Can be cascaded
AS-9104TLS	CAT5 4Ports KVM ,19inch4:3 LCD Monitor, OSDMenu, Demountable Structure, Can be cascaded
AS-9104DLS	DVI 4Ports KVM ,19inch4:3 LCD Monitor, OSDMenu, Demountable Structure
AI-9104ULS	VGA 4Ports KVM ,19inch4:3 LCD Monitor, OSDMenu, Demountable Structure, Can be cascaded, IPRemote Control
AS-7108ULS	VGA 8Ports KVM ,17inch4:3 LCD Monitor, OSDMenu, Demountable Structure, Can be cascaded
AS-7108TLS	CAT5 8Ports KVM,17inch4:3 LCD Monitor, OSD Menu, Demountable Structure, Can be cascaded
AS-7108DLS	DVI 8Ports KVM,17inch4:3 LCD Monitor, OSD Menu, Demountable Structure,
AI-7108ULS	VGA 8Ports KVM,17inch4:3 LCD Monitor, OSD Menu, Demountable Structure, Can be cascaded, IPRemote Control
AI-7108TLS	CAT5 8Ports KVM,17inch4:3 LCD Monitor, OSD Menu, Demountable Structure, Can be cascaded, IPRemote Control
AS-9108ULS	VGA 8Ports KVM,19inch4:3 LCD Monitor, OSD Menu, Demountable Structure, Can be cascaded
AS-9108TLS	CAT5 8Ports KVM,19inch4:3 LCD Monitor, OSD Menu, Demountable Structure, Can be cascaded
AS-9108DLS	DVI 8Ports KVM,19inch4:3 LCD Monitor, OSD Menu, Demountable Structure,
AI-9108ULS	VGA 8Ports KVM,19inch4:3 LCD Monitor, OSD Menu, Demountable Structure, Can be cascaded, IPRemote Control
AI-9108TLS	CAT5 8Ports KVM,19inch4:3 LCD Monitor, OSD Menu, Demountable Structure, Can be cascaded, IPRemote Control
AS-7116ULS	VGA 16Ports KVM,17inch4:3 LCD Monitor, OSD Menu, Demountable Structure, Can be cascaded
AS-7116TLS	CAT5 16Ports KVM,17inch4:3 LCD Monitor, OSD Menu, Demountable Structure, Can be cascaded
AI-7116ULS	VGA 16Ports KVM,17inch4:3 LCD Monitor, OSD Menu, Demountable Structure, Can be cascaded, IPRemote Control
AI-7116TLS	CAT5 16Ports KVM,17inch4:3 LCD Monitor, OSD Menu, Demountable Structure, Can be cascaded, Remote Control
AS-9116ULS	VGA 16Ports KVM,19inch4:3 LCD Monitor, OSD Menu, Demountable Structure, Can be cascaded
AS-9116TLS	CAT5 16Ports KVM,19inch4:3 LCD Monitor, OSD Menu, Demountable Structure, Can be cascaded
AI-9116ULS	VGA 16Ports KVM,19inch4:3 LCD Monitor, SD Menu, Demountable Structure, Can be cascaded, IPRemote Control
AI-9116TLS	CAT5 16Ports KVM,19inch4:3 LCD Monitor, OSD Menu, Demountable Structure, Can be cascaded, IPRemote Control

Dual-rail Series

Model	Configuration instructions
AS-7100ULD	VGASingle portVM ,17inch4:3 LCD Monitor, No OSD menu, Demountable Structure, Can be cascaded
AI-7100ULD	VGAingle portKVM ,17inch4:3 LCD Monitor, No OSD menu, Demountable Structure, Can be cascaded, IPRemote Control
AS-9100ULD	VGA Single portKVM ,19inch4:3 LCD Monitor, No OSD menu, Demountable Structure, Can be cascaded
AI-9100ULD	VGASingle portKVM ,19inch4:3 LCD Monitor, No OSD menu, Demountable Structure, Can be cascaded, IPRemote Control
AS-7104ULD	VGA 4Ports KVM,17inch4:3 LCD Monitor, OSDMenu, Demountable Structure, Can be cascaded
AS-7104TLD	CAT5 4Ports KVM,17inch4:3 LCD Monitor, OSDMenu, Demountable Structure, Can be cascaded
AI-7104ULD	VGA 4Ports KVM,17inch4:3 LCD Monitor, OSD Menu, Demountable Structure, Can be cascaded, IPRemote Control
AI-7104TLD	CAT54Ports KVM,17inch4:3 LCD Monitor, OSD Menu, Demountable Structure, Can be cascaded, IPRemote Control
AS-9104ULD	VGA 4Ports KVM,19inch4:3 LCD Monitor, OSD Menu, Demountable Structure, Can be cascaded
AS-9104TLD	CAT5 4Ports KVM,19inch4:3 LCD Monitor, OSD Menu, Demountable Structure, Can be cascaded
AI-9104ULD	VGA 4Ports KVM,19inch4:3 LCD Monitor, OSD Menu, Demountable Structure, Can be cascaded, IPRemote Control
AI-9104TLD	CAT5 4Ports KVM,19inch4:3 LCD Monitor, OSD Menu, Demountable Structure, Can be cascaded, IPRemote Control
AS-7108ULD	VGA 8Ports KVM,17inch4:3 LCD Monitor, OSD Menu, Demountable Structure, Can be cascaded
AS-7108TLD	CAT5 8Ports KVM,17inch4:3 LCD Monitor, OSD Menu, Demountable Structure, Can be cascaded
AI-7108ULD	VGA 8Ports KVM,17inch4:3 LCD Monitor, OSD Menu, Demountable Structure, Can be cascaded, IPRemote Control
AI-7108TLD	CAT5 8Ports KVM,17inch4:3 LCD Monitor, OSD Menu, Demountable Structure, Can be cascaded, IPRemote Control
AS-9108ULD	VGA 8Ports KVM,19inch4:3 LCD Monitor, OSD Menu, Demountable Structure, Can be cascaded
AS-9108TLD	CAT5 8Ports KVM,19inch4:3 LCD Monitor, OSD Menu, Demountable Structure, Can be cascaded
AI-9108ULD	VGA 8Ports KVM,19inch4:3 LCD Monitor, OSD Menu, Demountable Structure, Can be cascaded, IPRemote Control
AI-9108TLD	CAT5 8Ports KVM,19inch4:3 LCD Monitor ,OSD Menu, Demountable Structure, Can be cascaded, IPRemote Control
AS-7116ULD	VGA 16Ports KVM,17inch4:3 LCD Monitor, OSD Menu, Demountable Structure, Can be cascaded
AS-7116TLD	CAT5 16Ports KVM,17inch4:3 LCD Monitor, OSD Menu, Demountable Structure, Can be cascaded
AI-7116ULD	VGA 16Ports KVM,17inch4:3 LCD Monitor, OSD Menu, Demountable Structure, Can be cascaded, IPRemote Control
AI-7116TLD	CAT5 16Ports KVM,17inch4:3 LCD Monitor, OSD Menu, Demountable Structure, Can be cascaded, IPRemote Control
AS-9116ULD	VGA 16Ports KVM,19inch4:3 LCD Monitor, OSD Menu, Demountable Structure, Can be cascaded
AS-9116TLD	CAT5 16Ports KVM,19inch4:3 LCD Monitor, OSD Menu, Demountable Structure, Can be cascaded
AI-9116ULD	VGA 16Ports KVM,19inch4:3 LCD Monitor, OSD Menu, Demountable Structure, Can be cascaded, IPRemote Control
AI-9116TLD	CAT5 16Ports KVM,19inch4:3 LCD Monitor, OSD Menu, Demountable Structure, Can be cascaded, IPRemote Control

Package Contents

The LCD KVM switch package includes the following:

Name	Quantity/unit	Description
LCD KVM Console	1/pc	The LCD kit products
KVM Cables	N/pc	Cables quantities according to the standardPort that selected
Power	1/pc	If it is built-in power supply products, power built-in.
Power Cord	1/pc	Standard 1.8 m power cord
Instructions（CD）	1/pc	Using electronic data CD manual
Quick Installation Guide	1/pc	Quick installation manual
Mounting brackets	2/pcs	LCD KMVSingle mounting bracket
Lock ear	2/pcs	LCD KVM fix the rear panel
Install the screw kit	1/pc	Screw the mounting bracket

Check that all parts are present and that they are not damaged in transit. If you encounter problems, contact your dealer.
To prevent damage to the machine or equipment connected to the machine, please read this manual carefully and follow the instructions to install and operate it.

* There may be additional product features since the publication of this manual. Please visit our website to download the latest version of the user's manual.

Contents

User Precautions 3
Product Model Description 4
Single Slide Series 4
Dual-rail Series 5
Package Contents 6
About this manual 9
Description of Terms 10
Chapter 1 11
Introduction 11
Production Introduction 11
Product Features 13
Hardware Requirements 14
Console 14
Computer 14
Cables 14
Operation System 16
Part 17
Front View 17
Rear View 18
Front view of the 4: 3 screen and 16: 9 screen 20
Single Slide & Dual Slide LCD Display 20
Overall Dimensions of the LCD KVM 23
Chapter 2 27
Hardware Installation 26
Stacking and Installation Precautions 26
Standard Rack Mounting 28
KVM Modules' Assembly & Removal 32
Removal of the Keyboard Module 33
Expansion Module Installation 34
Single Device Installation 37
Installation of Single Port LCD KVM Switch 40
Cascade Device Connection 42
Chapter3 46
Basic Operation 46
Hot Plug 46
Hot - Plug Computer Connection 46
Hot - Plug Console Port 46
Connection Port Selection 46
Switch the Selection Manually 46
OSD Menu Screen Selection 47
Hotkey Selection 48
Power Off and Restart 48
Open Way of LCD Screen 49
Chapter4 51
OSD Operating 51
OSD Introduction 51
OSD Log in 51
OSD Hot Key 51
OSD Main Menu 52
OSD Main Menu Title 52
OSDIntroduction of Function Keys 53
F1 GOTO： 53
F2 SCAN： 54
F3 LIST： 54

F4 QV： 55
F5 EDIT： 55
F6 SET： 55
OSD ACTIVATING HOTKEY 57
SWITCH HOTKEY 57
CHANNEL DISPLAY MODE 57
CHANNEL DISPLAY DURATION 57
CHANNEL DISPLAY POSITION 57
SCAN DURATION 58
SET PASSWORD 58
SET SUPER PASSWORD 58
CLEAR THE NAME LIST 59
RESTORE DEFAULT VALUE 59
LOCK CONSOLE 59
Appendix 60
Safety Instructions 60
General 60
Rack mounting 61
Product Specifications 62
LCD Module Specifications 65
Warranty Conditions 65

About this manual

This User's Guide will assist you in the effective use of the product features, including the installation, setup and operation of the equipment. You will find the following in this manual:

Chapter 1 Introduction - This chapter introduces the Rack KVM device system, including its functions, features, and advantages, and describes and introduces the front and rear panel components.

Chapter 2 Hardware Installation–This section describes how to install the product and the necessary steps - including basic stand-alone installation, multi-switch level connection installation, and IP module expansion installation.

Chapter 3 Basic Operation–Explain the basic operating concepts of the KVM switch.

Chapter 4 OSD Operation–Provides a complete KVM switch OSD (onscreen menu) introduction and explains how to use it.

Appendix - Main specifications and other technical information about the associated KVM switch.

Description of Terms

Symbol Indicates the text information that should be entered

【】The parentheses indicate the keys that need to be entered. For example, [Enter] means topress the Enter key. For keys that need to be entered at the same time, they are placed in the same bracket, and the keys are joined by a plus sign. E.g:【Ctrl+Alt】

1.Numbers indicate the actual operating sequence numbers.

◆ The diamond symbol indicates that the information is provided for reference, but is not relevant to the procedure.

● The origin symbol indicates the sorting sub-item information, independent of the operation steps.

Indicates the most important information.

Product Information

To find out more about KVM's products and how to use them more efficiently, please visit our website or contact an authorized dealer for more contact information.

Chapter 1

Introduction

Products Introduction

4/8/16Ports USB/PS.2 LCD KVM Switch is a functional equipmentthat allows administrators to control 4/8/16pcs computers from a set of USB keyboards, mice, or a set of PS2 keyboards, mice. You can also use a single port LCD KVM switch as the computer keyboard, mouse, monitor external devices use; front panel also adds front USB expansion port, you can easily add an external USB mouse and keyboard operation; support two-level cascade can be Single console to manage up to 256 computers;

In addition, according to the needs of users to expand the function, to KVM OVER IP transmission control mode, only need to add the product in the expansion card slot IP KVM module card, you can upgrade to remote network management digital KVM management device, user-friendly environment does not change the existing circumstances quickly and quickly upgrade the advanced control mode applications.

There are four convenient ways to switch the computer in the installation: (1) Use the Port Select button on the front panel of the switch; (2) Enter the hotkey combination from the keyboard; (3) From the On-Screen Display (OSD) select. The auto-scan feature provides automatic scanning and monitors the computers in the installation architecture one by one. (4) Through the expansion of the IP module of the network port for remote network control operation even in the KVM above the computer.

This product is very fast and easy to install, just simply connect the cable to the appropriate connection Port , no software settings, no cumbersome installation procedures, and there will be no incompatibility issues. As the device can directly access the keyboard input data, it can operate in a variety of operating platforms (compatible PC, Mac, Sun, etc.).

As it allows a single console to manage the computers connected to it, a set of KVM installations,(1) eliminates the cost of individual keyboards, monitors, and mice for each computer; and (2) saves the cost of additional equipment that can be used by the additional devices. This allows for the installation of a set of KVMs that can be managed from a single console. Space; (3) to save energy costs; (4) to avoid moving back and forth between the various computers inconvenience and waste. (5) the rapid upgrade to IP control mode remote network control mode.
The series of LCD liquid crystal display can be divided into three models for you to choose:17inch、19inch、19inch wide-screen。
The series of products according to the use of LCD components can be divided into single-pull pull mode, double-pull double pull mode, Which dual-rail design LCD display and keyboard / touchpad module can be individually sliding.To maximize the space in the data center, when not using the keyboard / touchpad, push it back into the rack to "hide", allowing the administrator to monitor the status of the computers in the device.
The modular design and installation of the product series, you can freely replace the actual needs of the KVM

components to facilitate the free combination of different applications. According to the module type can be divided into three categories: VGA device type, DVI device type, CAT5 type, Port number can be divided into 1, 4, 8, 16 .

Product Features

- A group of USB console can manage 1, 4, 8 or 16 VGA or DVI interface computer
- control side supports USB and PS2 two interface types of keyboard, mouse device
- Can control two cascades ,cascade control up to 256 computers
- The front panel keypad, keyboard hotkey and on-screen menu (OSD) can be used to switch the computer
- connected with the accused device BIOS-level access, do not have to worry about the risk of viruses and Trojans invasion
- the accused computer does not need to install any software and the driver, the accused computer direct recognition KVM
- 17 "and 19" LCD display and keyboard, mouse, KVM integrated into one chassis, reducing the volume
- Front USB Port, convenient for user to extend USB peripheral keyboard and mouse
- dual slide design, LCD display and keyboard, mouse control panel can be individually pulled
- Unique single installation mode, more convenient technical staff to install
- Control terminal lock function, close the LCD display Push into the track, can automatically limit the lock, pull out the armrest automatically unlock
- LCD power button, you can turn off the monitor when not in use, save power, extend the life of the LCD monitor
- LCD can rotate 0-110 degree elevation angle, it is convenient for you to adjust the suitable viewing angle
- It is compatible with other KVM switches of our company and can be cascaded and extended
- Remote ControlIP module, supports multiple browser applications to access Internet Explorer, Chrome, Firefox, Safari, Opera, Mozilla, Netscape, etc.
- You can upgrade the remote network control mode through the extended IP board
- Support OSD to set user login mode and increase KVM login security requirements
- Support high video resolution in local and remote IP mode - Support 480i, 480p, 720p, 1080i and 1080p (1920 × 1200)
- Support wide screen resolution
- Extended IP remote control mode supports 1000M Ethernet control transmission requirements
- Support remote firmware update
- Remote can be based on the actual network bandwidth to transmit video frame rate, bit rate, the mouse pointer movement rate adjustment
- support DDC communication, to adapt to a variety of graphics devices
- The Auto Scan function monitors all computer operations
- Support cross-platform operation - Windows, Linux, Mac * and Sun *
- PC connected to the keyboard and mouse using Keep Online simulation technology mouse and keyboard, equipment security and stability, fast switching without delay
- The remote IP control mouse is absolutely coincident and automatically follow
- The remote video form can be adjusted freely to meet different display screen display requirements
- Remote video support "one screen multi-display" function, you can watch a computer in a multi-computer screen
- controlled display screen can be zoomed non-polar function, any proportion of the size of the show
- Multi-window overlay technology can display multiple windows on the same remote console, and select and control any windows.
- IP expansion module uses plug and play is installed, customers do not need to disassemble, you can quickly complete the expansion of equipment installation
- Convenient and friendly remote login mode, through the browser for Web page access and related settings and query

- Three user-level settings, multi-user group settings, suitable for a variety of management requirements
- Remote control desktop can be set according to user habits Two different mouse application mode

Hardware Requirements

Console

- Rear two USB Type A keyboard and mouse
- Pre-set a USB Type A type keyboard and mouse
- A set of USB interface mouse
- A set of USB interface keyboard
- Single-ended extension cable (optional)
- IP remote control terminal 1000M network interface (optional installation)

Computer

The following devices must be installed on each computer:

- A VGA or DVI video display card
- USB Type A connection port
- PS2PS2 keyboard,mouse Port

Cables

KVM equipment provides six kinds of connection cables according to the user's use to choose:

- LCD KVM switch single port DVI cable
  LCD Connector DB37P

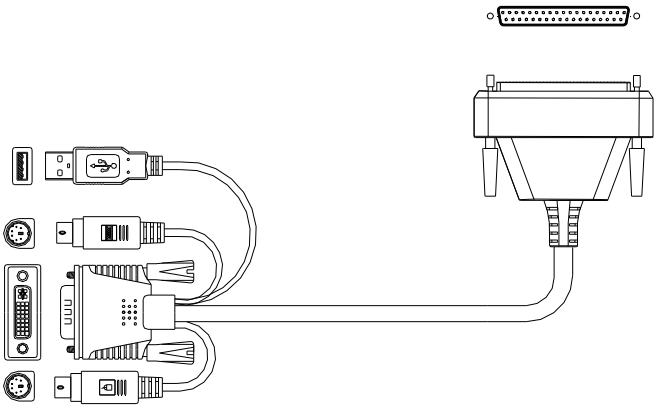

Computer-side DVI-I + USB (Type A)+ PS2 keyboard (purple) + PS2 mouse (green)

- LCD KVM switch single port VGA cable
  LCD Connector DB37P

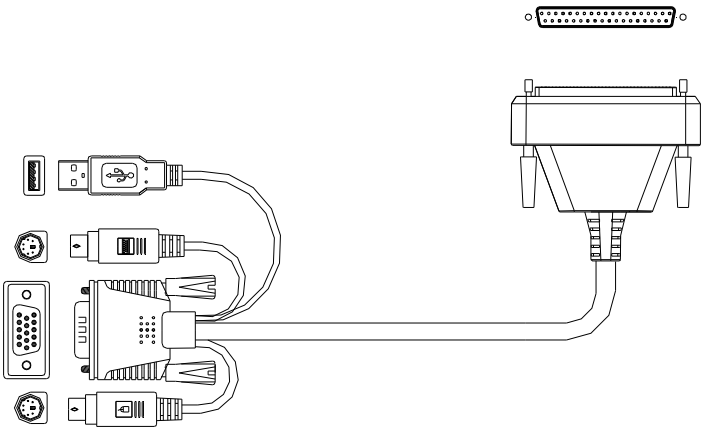

Computer-side VGA + USB (Type A) + PS2 keyboard (purple) + PS2 mouse (green)

◆ VGA + USB (Type A) + PS2 Keyboard (Purple) + PS2 Mouse (Green)

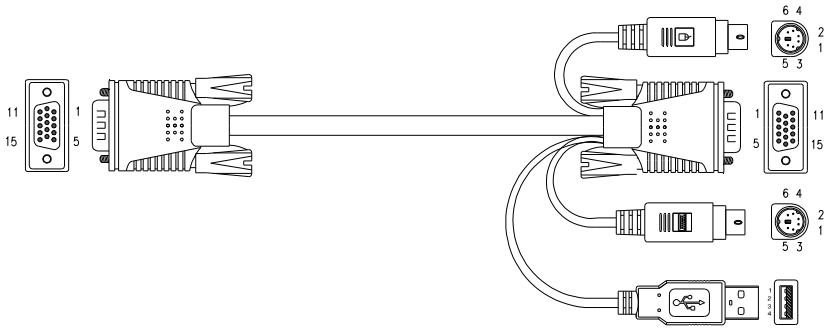

◆ DVI-I + USB（Type A） + Audio

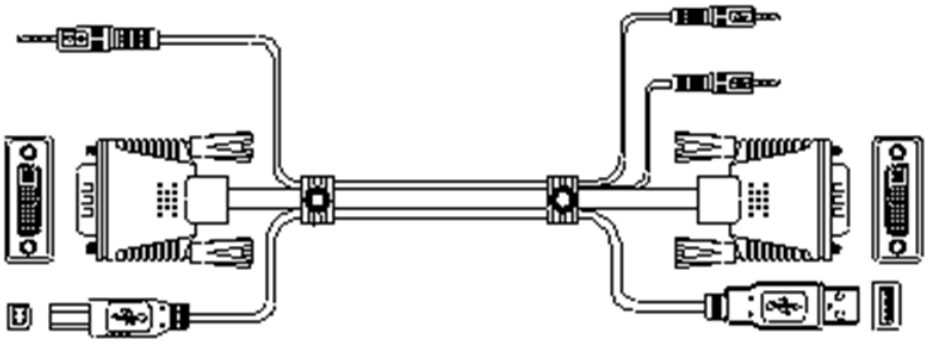

KVM connection Computer connection

Note: The cable length affects the quality of the display. If you need other lengths of cable, contact the merchant you purchased to purchase a cable suitable for this switch.

◆CAT5 connection Dongle VGA + PS2 keyboard (purple) + PS2 mouse (green)

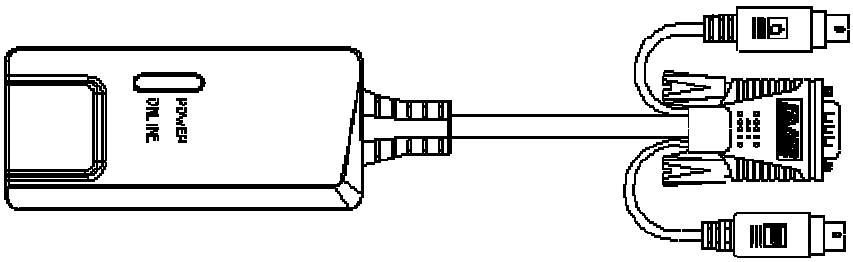

◆CAT5 connection Dongle VGA + USB (Type A)

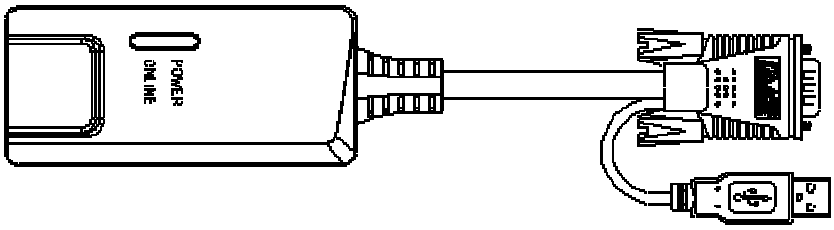

Operation System

Operation System		Version
Windows		Windows 2000/XP/2003/2008/Vista/7/10
Linux	RedHat	9.0 or higher Fedora and above, RHEL AS 4, RHEL 5
	SuSE	10/11.1、OpenSUSE 10.2; SLES 10 SP1
	Debian	3.1/4.0
	Ubuntu	7.04/7.10
UNIX	AIX	4.3 or higher
	FreeBSD	5.5 or higher
	Sun Solaris	8 or higher
Mac		OS 9.0 to 10.6 (Snow Leopard)
Novell	Netware	6.0 or higher
DOS		6.2 or later

More operating system support: please pay more attention to the latest version of the relevant product compatibility.

Parts

Front View

According to the size of the LCD screen is divided into two styles, as shown below, the components of the description please see the figure after the serial number table describes the details.

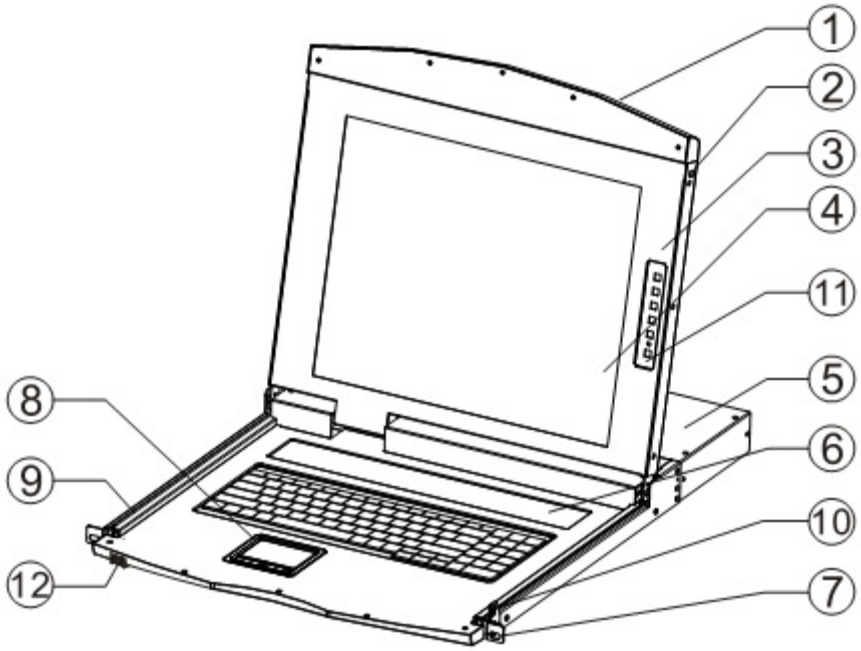

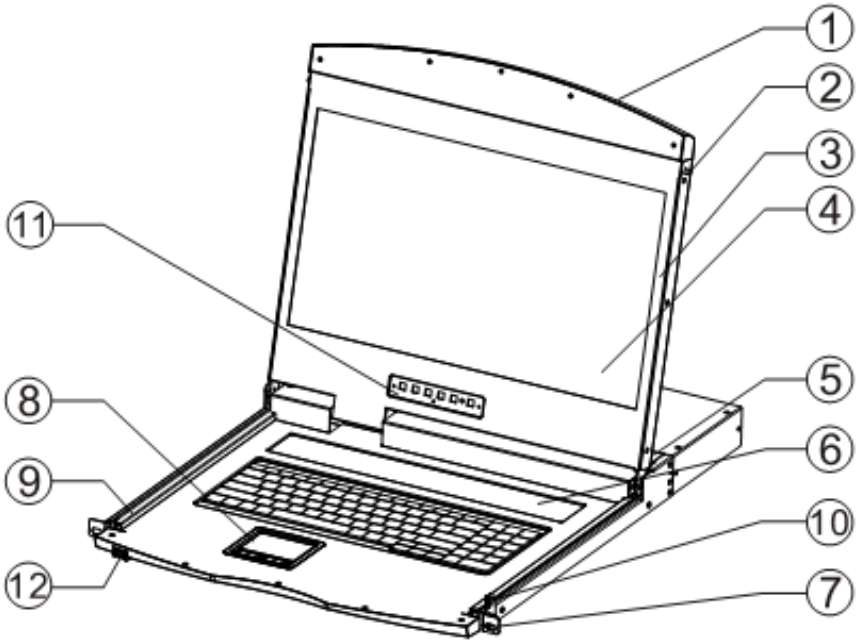

No	Part	Function Description
1	Upper handle	Pull the handle, slide the LCD module out and push it in
2	Lock	Used to lock the LCD module, pull out the module must first unlock, push into the automatic locking
3	LCD screen cover	Can be opened or closed with the handle, opening and closing

		angle of 0-110 degrees
4	LED screen	17 "or 19" LED LCD screen
5	KVM Module	KVM modules are free to replace and remove
6	KVMKey panel	The KVMPort manual switch function is completed by pressing the key
7	Front mounting brackets	The LCD KVM can be installed on the cabinet posts with screws
8	Touch Mouse Pad	KVM console mouse, can control the computer's computer operation
9	Slide rails	LCD module sliding track, can be telescopic freely
10	Keyhole	Corresponds to the latch of the LCD module
11	LCD Keypad Panel	Used to control the LED screen display adjustment and switch
12	Front USB	Used to access an external USB keyboard or mouse

Rear view

The Rear View of this product series is a rear view of the Removable KVM Switch Module, and the functional description of each Hardware Port (refer to the description of the corresponding KVM Switch product brochure.)

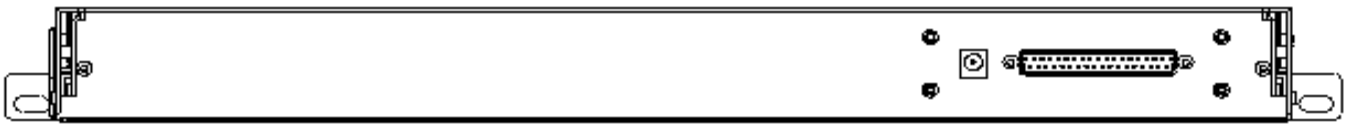

LCD KVM Single port Rear View

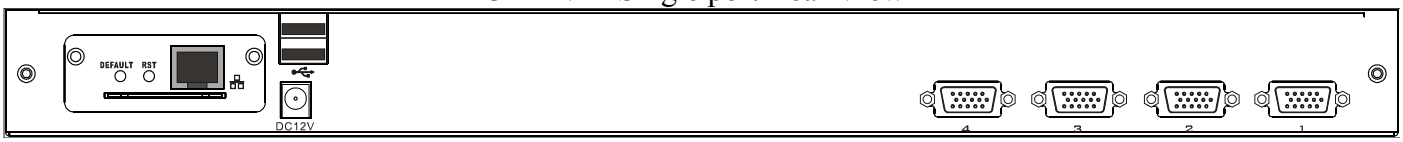

LCD KVM 4 port VGA Rear View

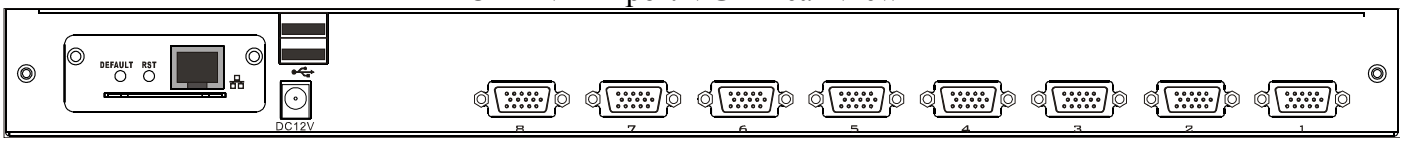

LCD KVM 8 port VGA Rear View

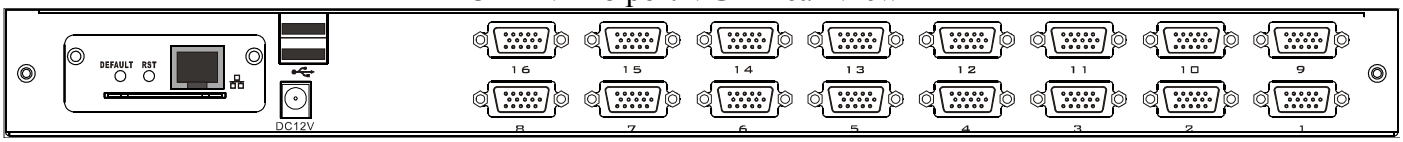

LCD KVM 16 port VGA Rear View

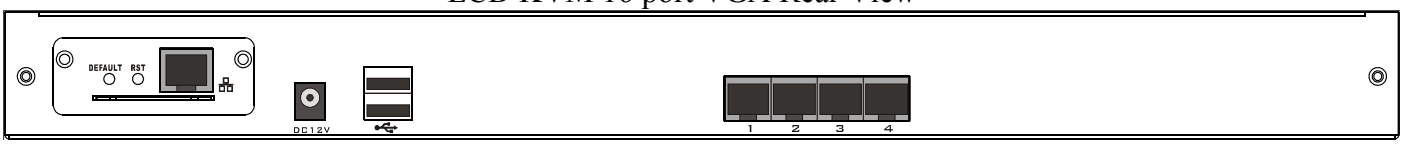

LCD KVM 4 port CAT5 Rear View

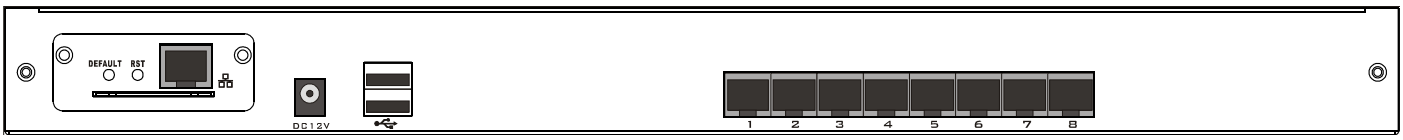

LCD KVM 8 port CAT5 Rear View

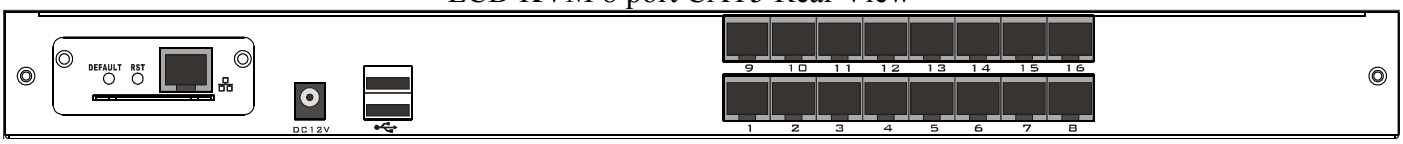

LCD KVM 16 port CAT5Rear View

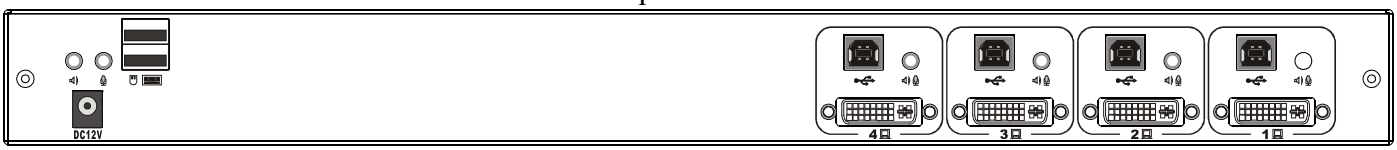

LCD KVM 4 port DVI Rear View

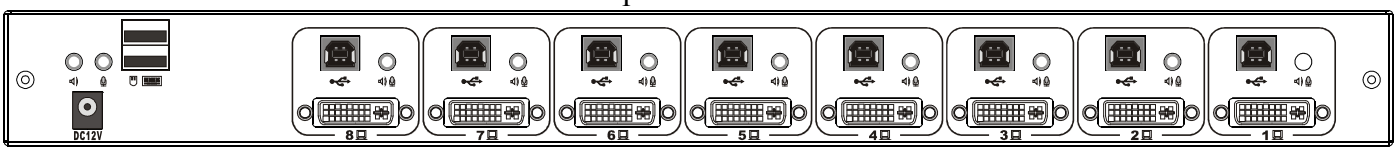

LCD KVM 8 port DVI Rear View

According to the type of KVM ,the rear view of the product can be divided into three categories:

- VGA Port
  This type of LCD KVM switch can be divided into 4 models according to the number of ports: single port, 4 ports, 8 ports, 16 ports. In addition, the control module of Remote ControlIP can be selected according to the needs.
- CAT5 Port
  This type of LCD KVM switch can be divided into 3 models according to the number of ports: 4 ports, 8 ports, 16 ports, in addition can be optional Remote ControlIP control module.
- DVI Port
  This type of LCD KVM switch according to the number of Port can be divided into two models: single-port, four, eight.

Single –rail &Dual-rail LCD Console display

Front view of the 4: 3 screen and 16: 9 screen (single-rail):

17inch4: 3 screen

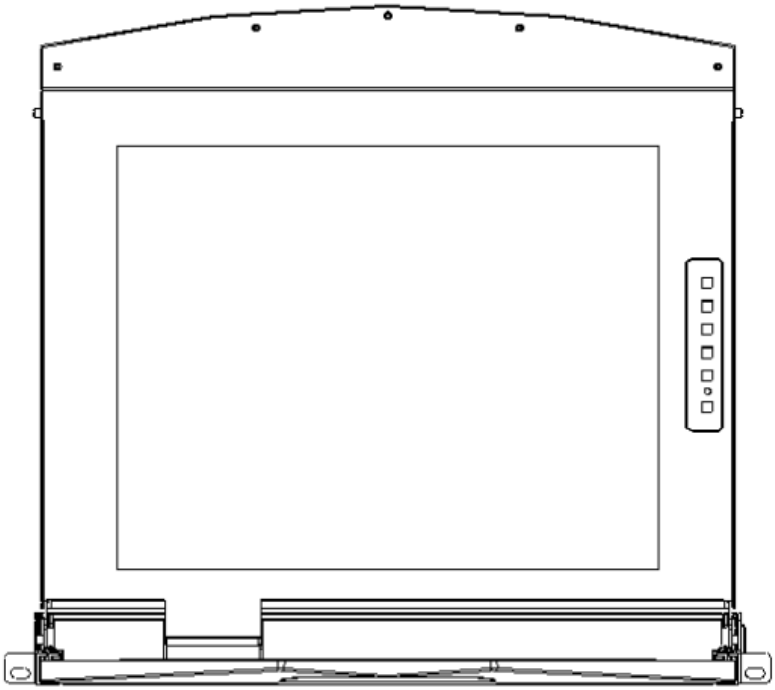

19inch 16: 9 screen

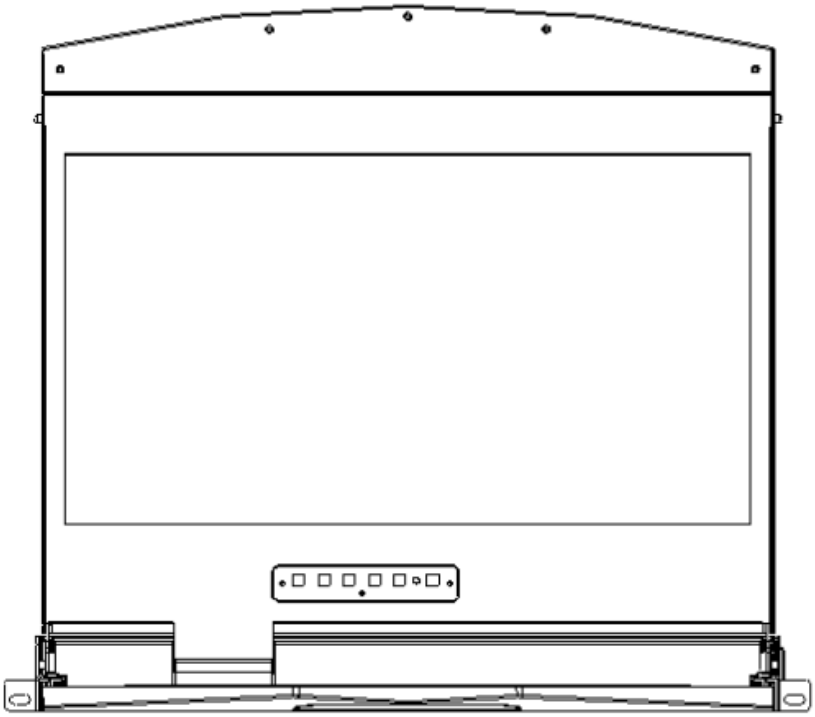

Front view of the 4: 3 screen(dual-rail):

17inch 4:3 screen

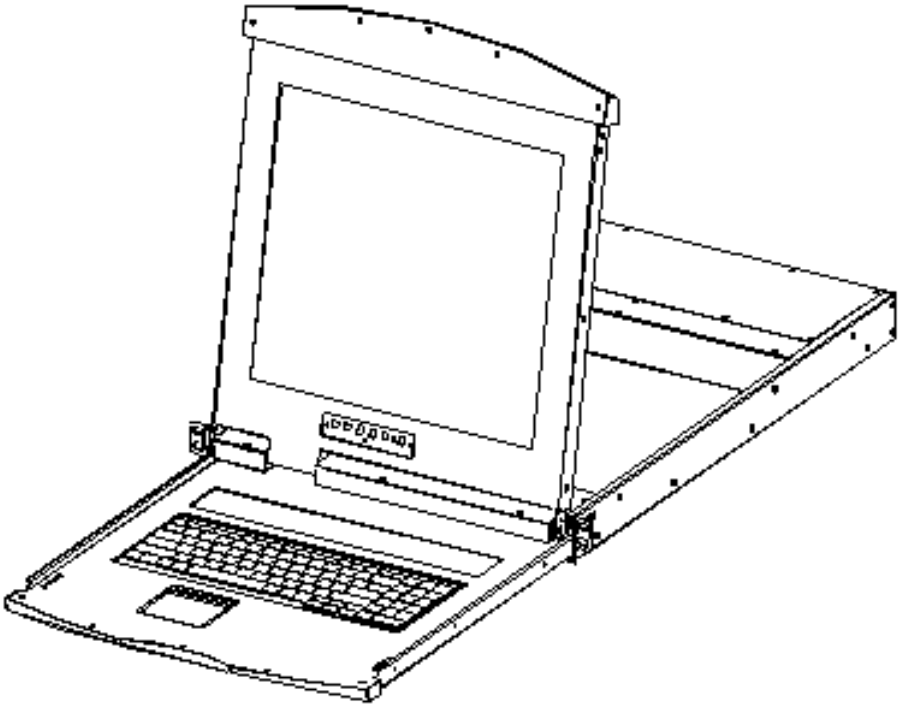

19inch 4:3 screen

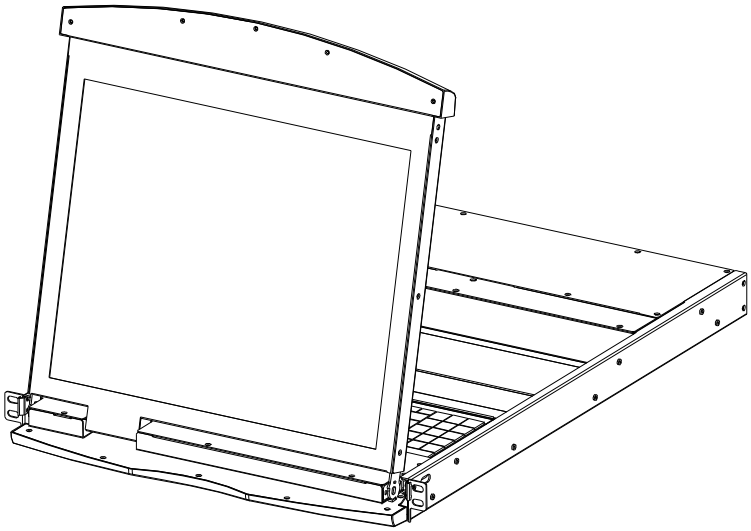

Dual -Rail Slide View

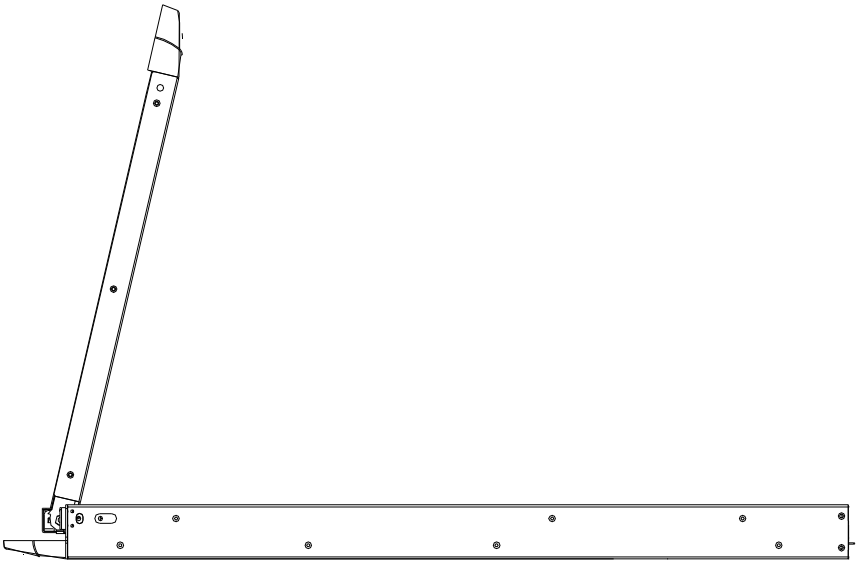

Dual-rail overall rear view

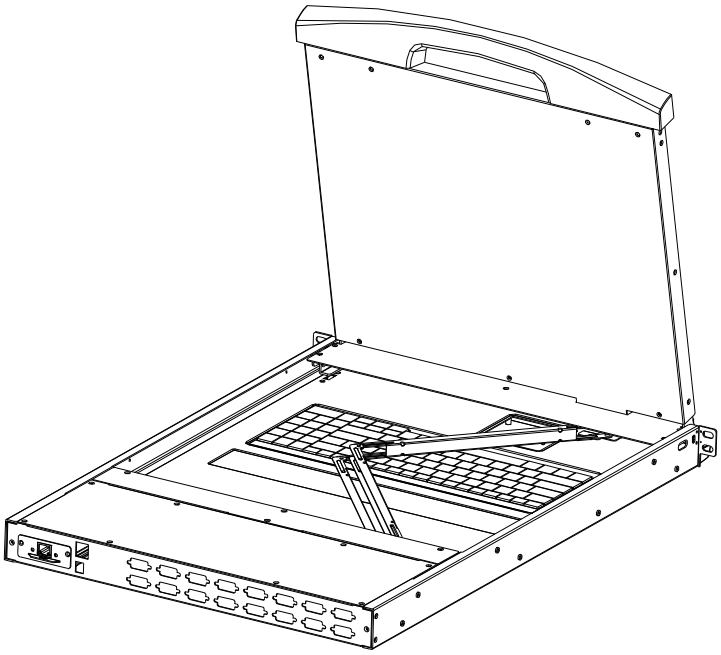

Overall Dimensions of the LCD KVM

Single-rail single port KVM Console dimension:

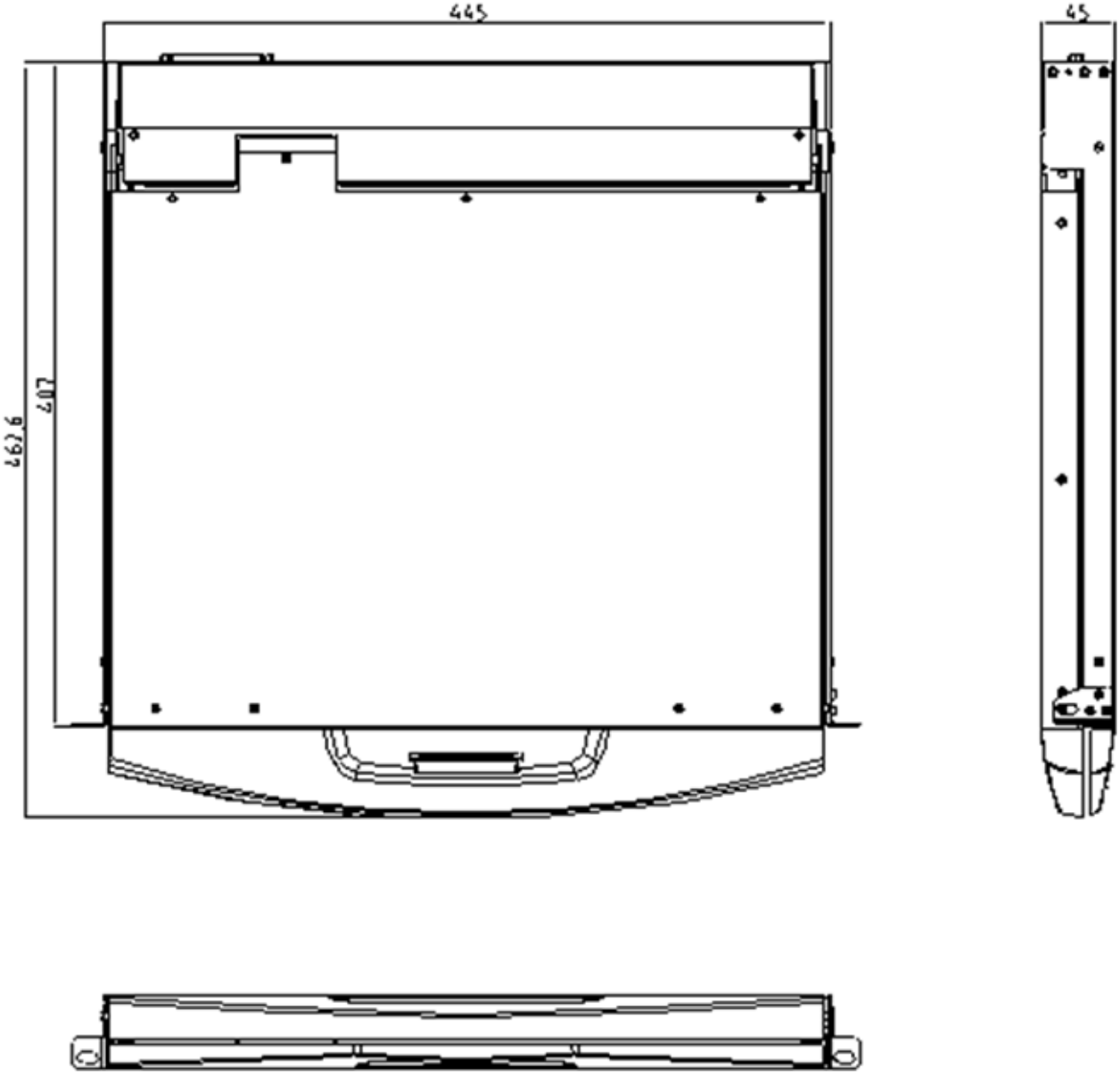

Single –rail multi-ports KVM Console dimension:

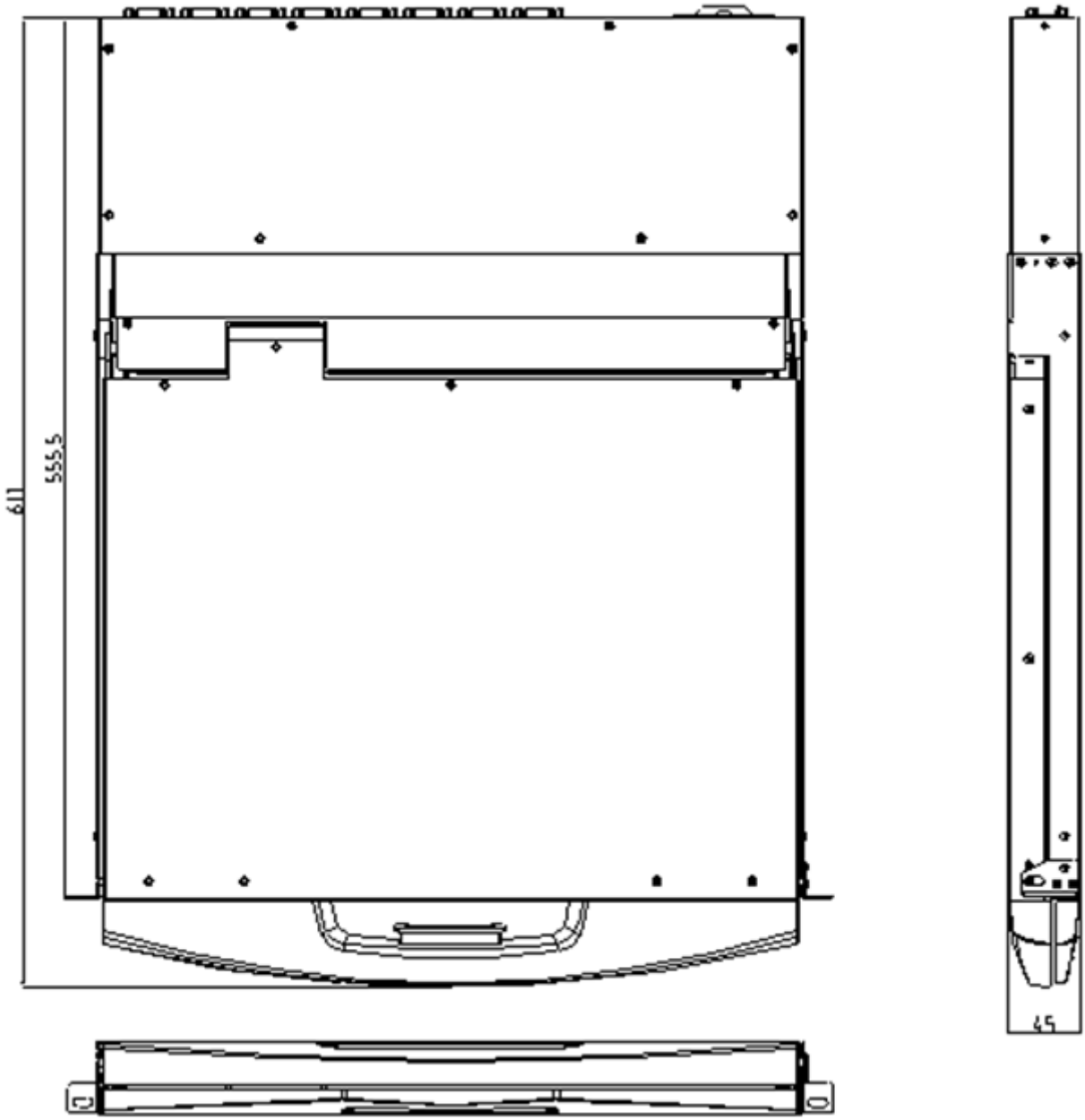

Dual-rail LCD KVM Console dimension:

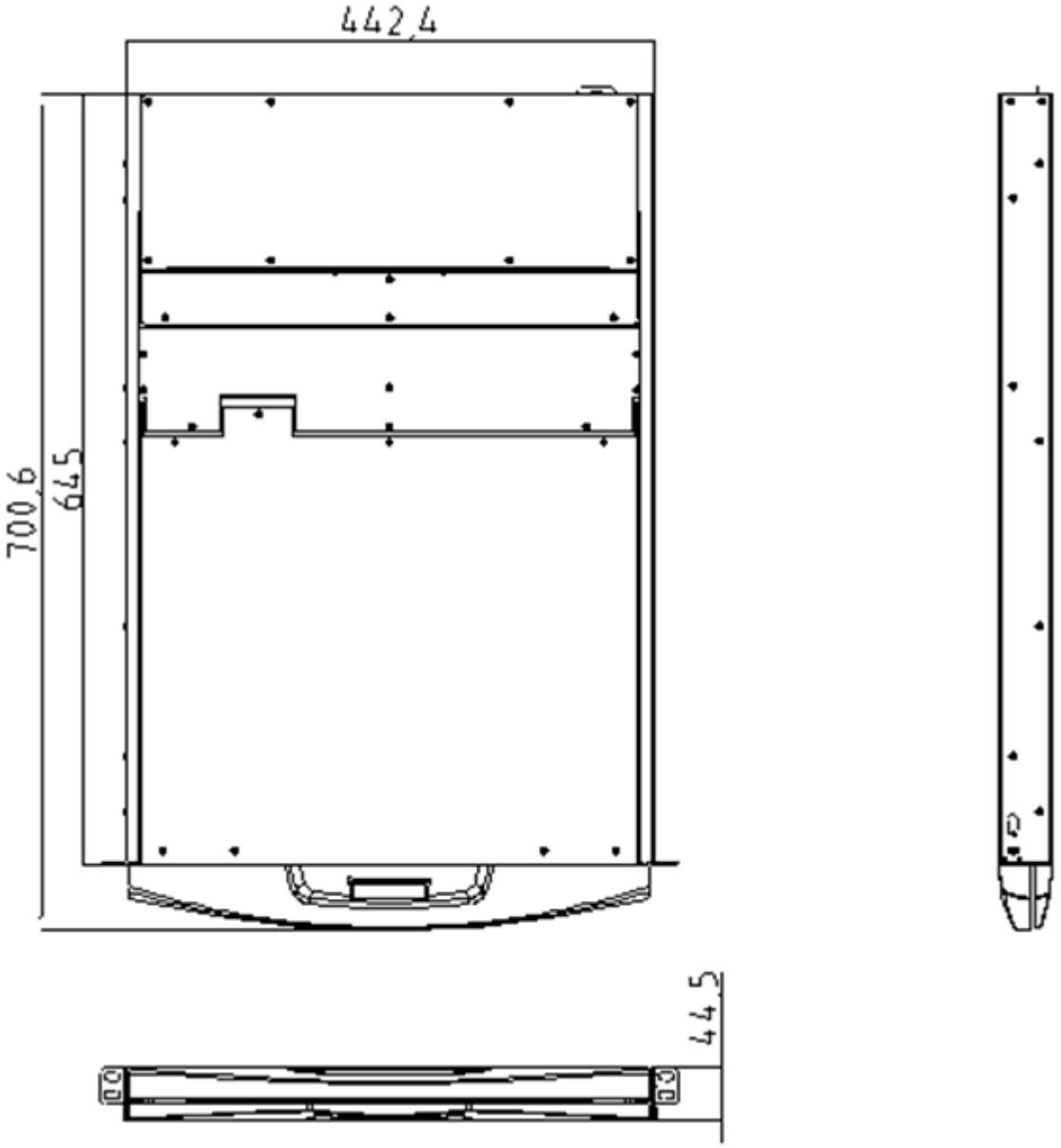

Chapter 2

Hardware Installation

Stacking and Installation Precautions

1. Important safety information regarding the placement of the LCD KVM switch is listed in the appendix, please refer to it before proceeding.
2. Before installation, please make sure that all the devices connected to the power supply are turned off. You must unplug all the power cord of the computer with keyboard power on
3. LCD KVM switch packing stuffed with stuffing in the process of delivery to protect the product. Attach the protective film and filler to the LCD module and remove the filler before mounting.

The LCD KVM switch can be placed in any suitable plane and is sufficient to securely support the weight of the equipment plus additional cables;Please make sure that the plane is clean and free from other debris that can affect the ventilation and normal operation of the switch.

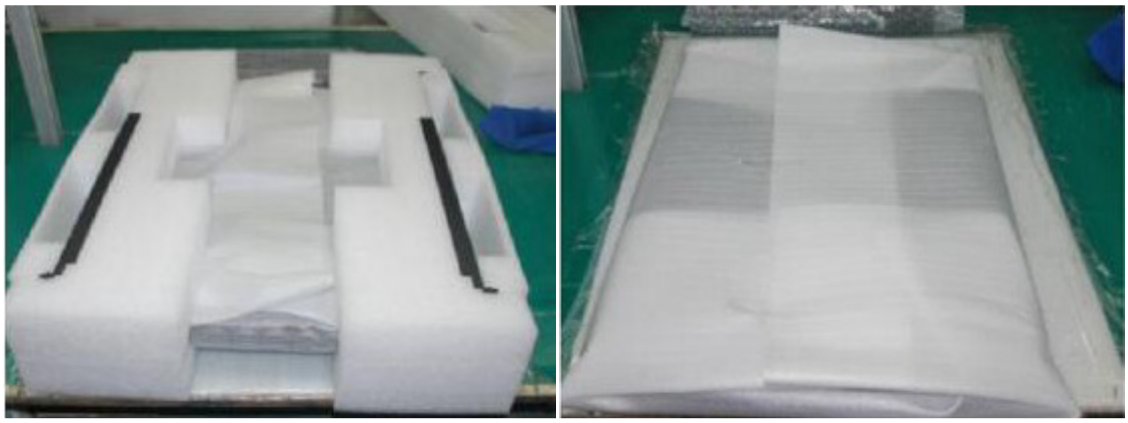

INSTALLATION

Before Use:Make sure all the devices are power off.

External Mounting bracket installing (All ULD/TLD serial products):

Screw the front flange to the rack first. Slide the bars with the rear flange towards the rack until the flanges make contact with the rack, then screw the rear flanges to the rack.

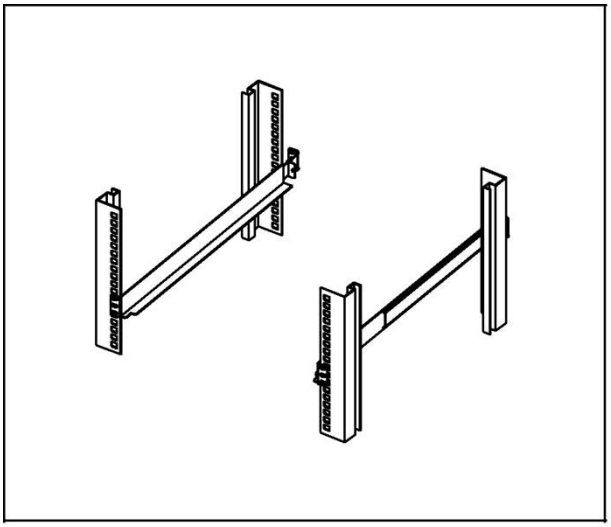

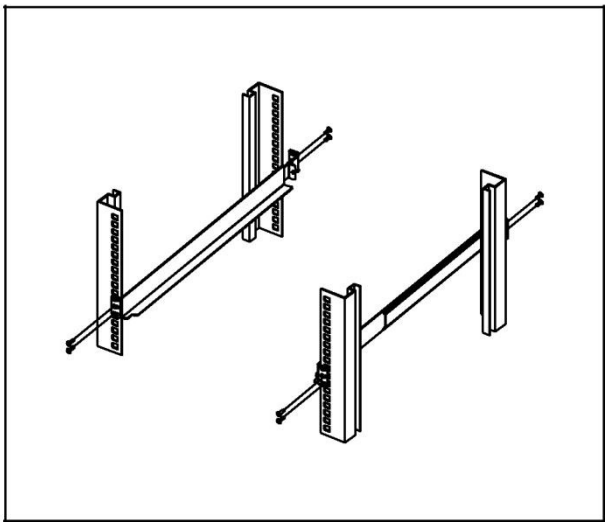

Slide the switch onto the support flanges. Use the screws supplied with this package to loosely attach the front of the switch to the front of the rack.

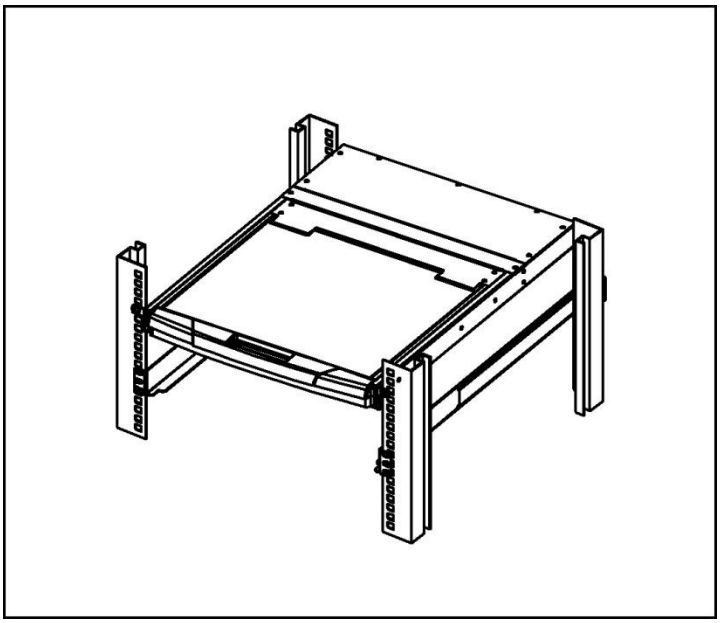

Slide the rear attachment sliding brackets along the slide bars until they contact the rear of the switch.

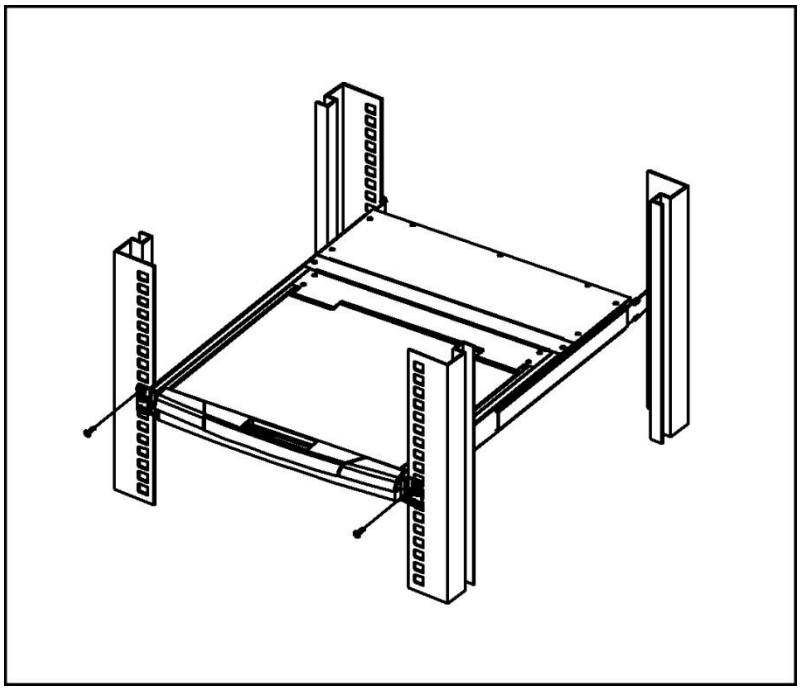

Use the screws supplied with this package to attach the bars to the rear of the switch

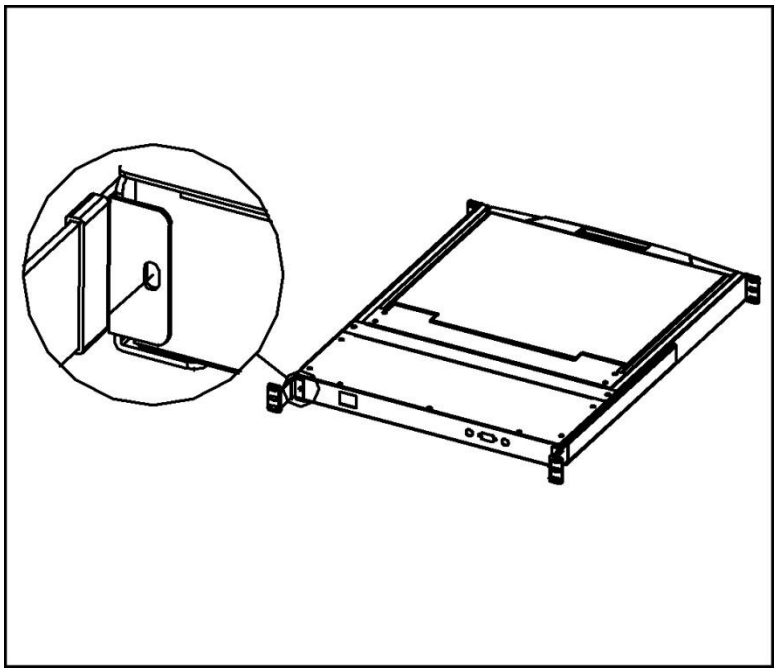

Built-in mounting bracket installing (All ULS/TLS/DLS Serial products):

- The built-in mounting bracket comes with a nut, and the fixing nut is welded inside the bending hole at the top of the bracket. Install the bracket into the cabinet mounting post on the upper cabinet, align the bracket mounting holes with the holes in the cabinet mounting column, and then use the screws to fix.

- Place the KVM Switch in the installed bracket and secure the KVM Switch, cabinet and mounting bracket.

- Mounting and fixing in the bracket tail

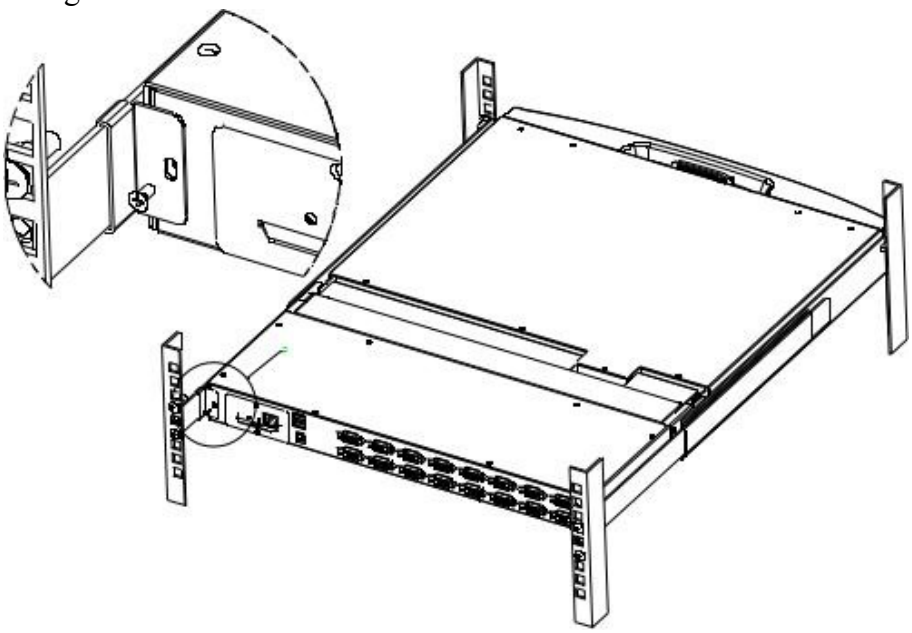

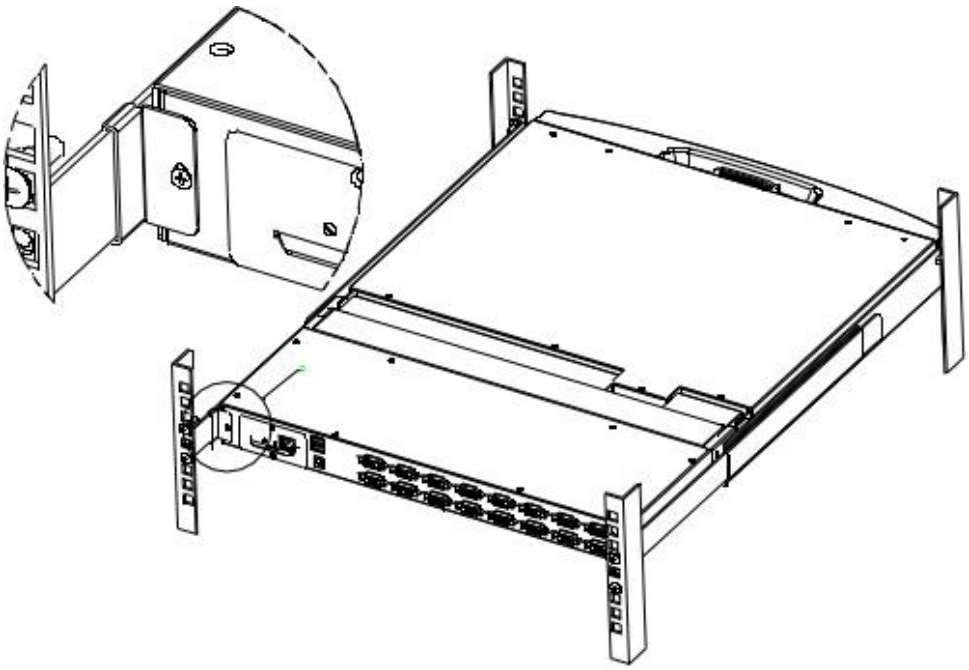

- Screws mounting position instruction

Note: There may be a difference between the two-rail mounting bracket and the single-slide carriage. For the dual-rail product, please refer to the following figure.

KVM Module assembly & disassembly

This series of LCD screen and keyboard, mouse and the rear part of the KVM part of the components can be demolished separation, this design allows you to change the KVM components, or KVM components damaged KVM components dismantled after the return to the manufacturer for repair and replace.

Please refer to the figure for loading and unloading operations:
1. Now put this series of products on the appropriate operating platform, ready for
Screwdriver tools for subsequent use of removable screws.

Remove the KVM assembly and the captive screws on the side brackets as shown to separate the KVM assembly from the front LCD assembly.

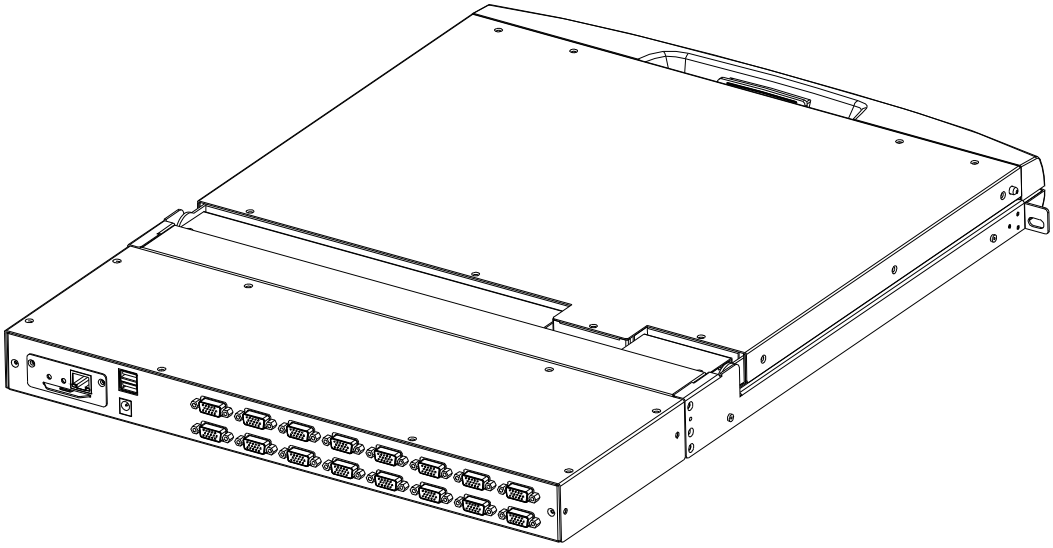

2.

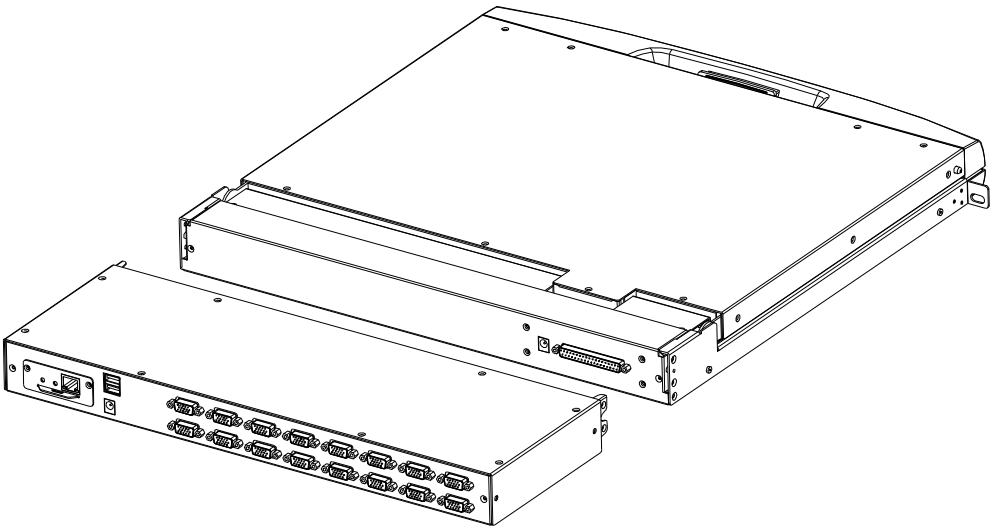

3.Please note the connector between the KVM module &LCD during the Removal and installation, or it may damage the connection interface and equipment function failure.

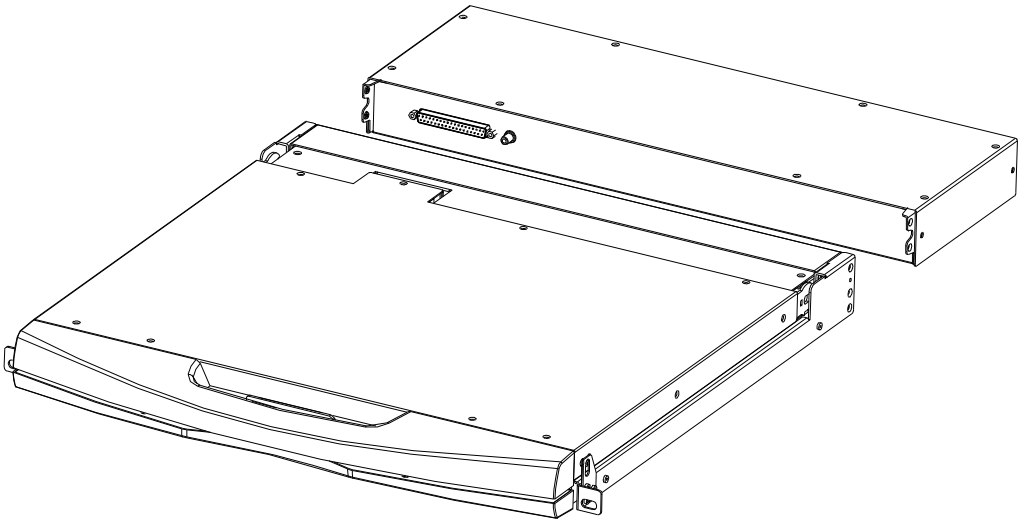

Disassembly of the Keyboard Module

If you need to replace the LCD module part of the keyboard or repair this part, can also be demolished according to the following diagram.

1.The LCD KVM placed in the rack and fixed, the LCD panel turned up, revealing the keyboard, the mouse's operating surface.

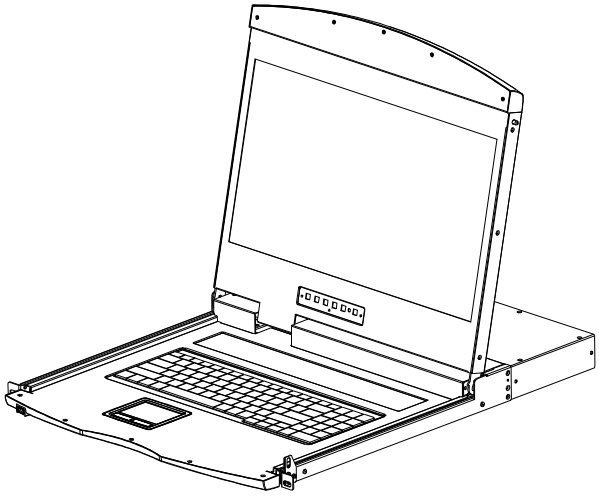

2.The bottom of the keyboard panel has a circular hole, you can use your fingers through the circular hole, the top of the keyboard.

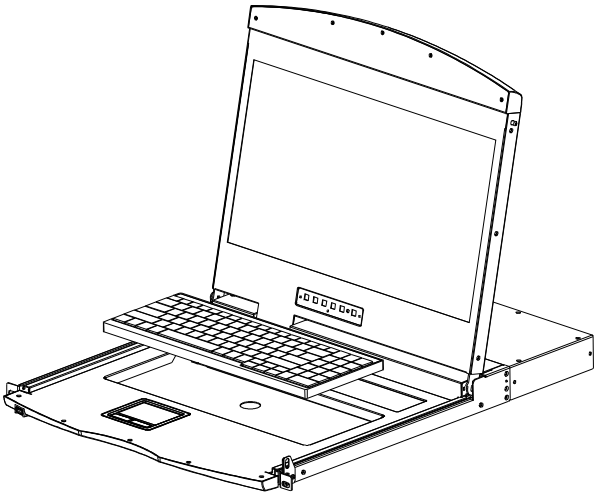

3. Pull the keyboard from the limit slot gently, find the connection side of the USB interface, remove the USB from connection side, the keyboard could be taken out. Thus completing the demolition of the keyboard module.

Note: If you replace the installation, please first plug the keyboard USB interface, then put the keyboard module into the limit slot.

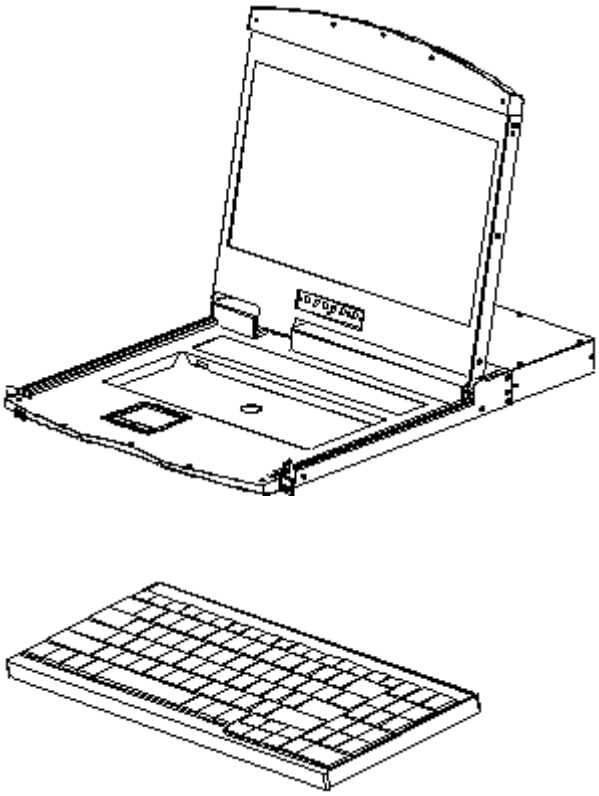

Expansion Module Installation

If you buy a KVM switch, because you need to increase the remote control and operation, you can directly

with the dealer to buy our products supporting the IP module for equipment upgrades and expansion, the operation method is simple and quick, can quickly enhance the integrated management of KVM Application ability.

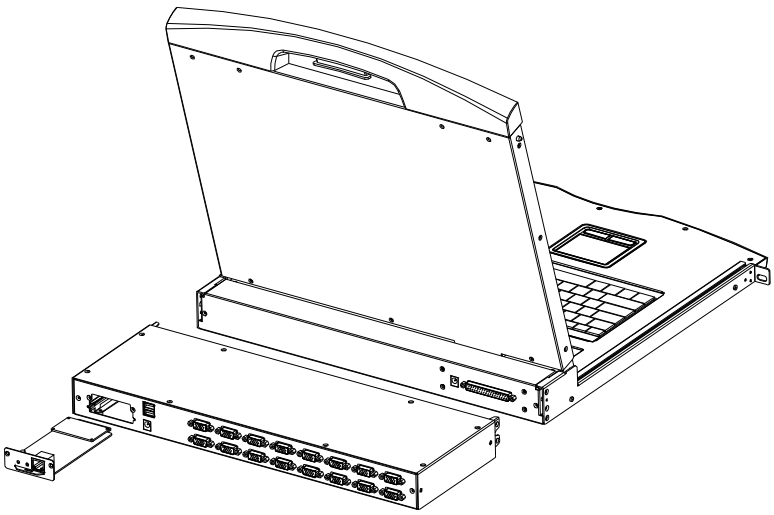

1. find the rear of the device, expansion slot outside the blank position for installation, you need to prepare a screwdriver for removal and installation tools.

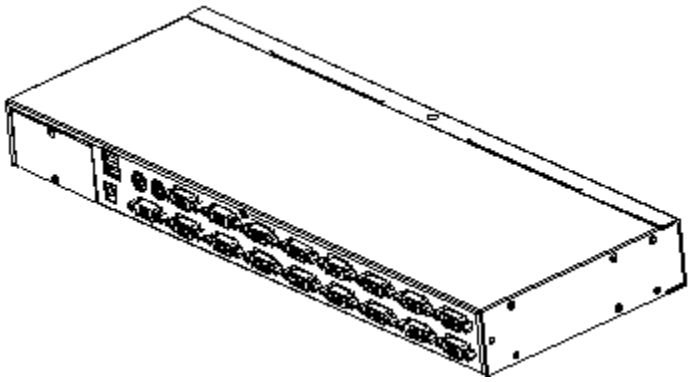

2. Before installation, use a screwdriver to remove the two fixing screws on the blank.

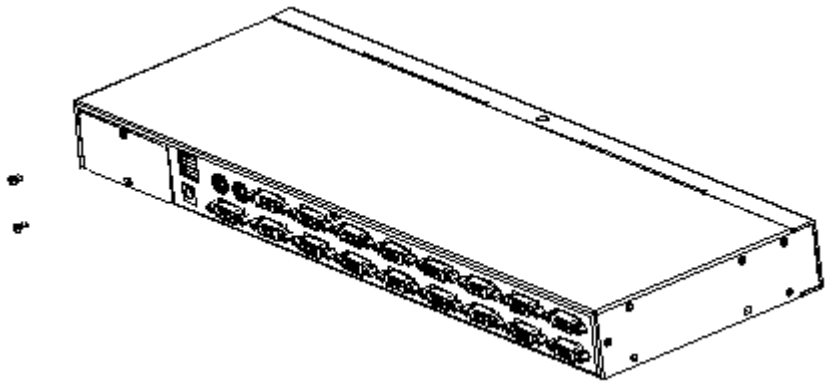

1. Remove the blank after you can see the need to expand the installation of the IP module placement cavity, keep the screw removed down.

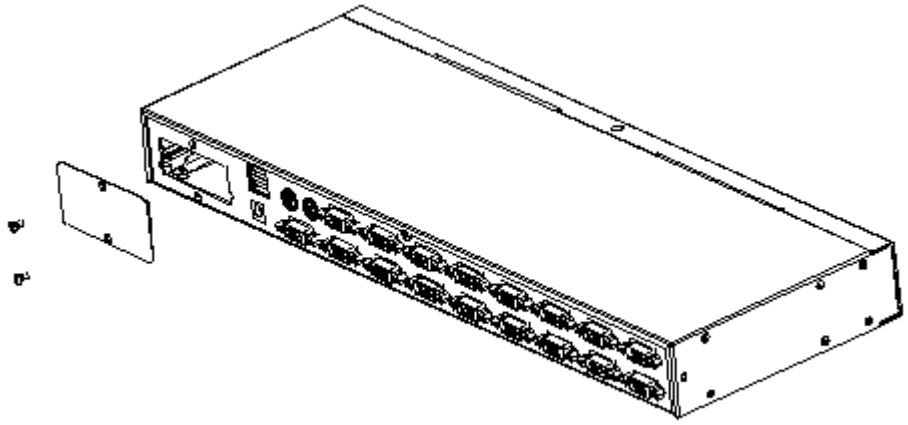

2.Remove the extended IP module and push it gently into the recess in the mounting module cavity as shown.

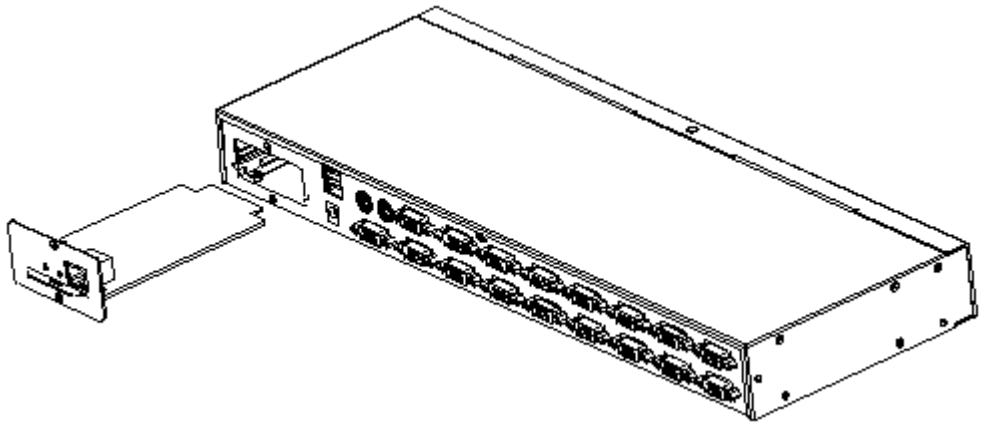

3.After pushing the IP module to the bottom, fix the IP module with the two screws that have been removed before.

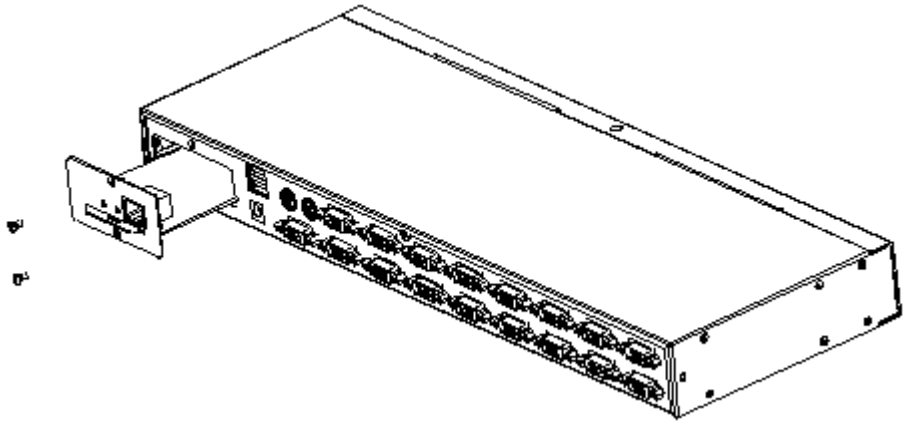

4.After installing the IP module, you need to follow the instructions of the IP module To install the software and configure the IP address of the device before you can connect the network cable to the switching device. After the installation is complete, you can access the network to log in. (For details, refer to the IP module's product manual.)

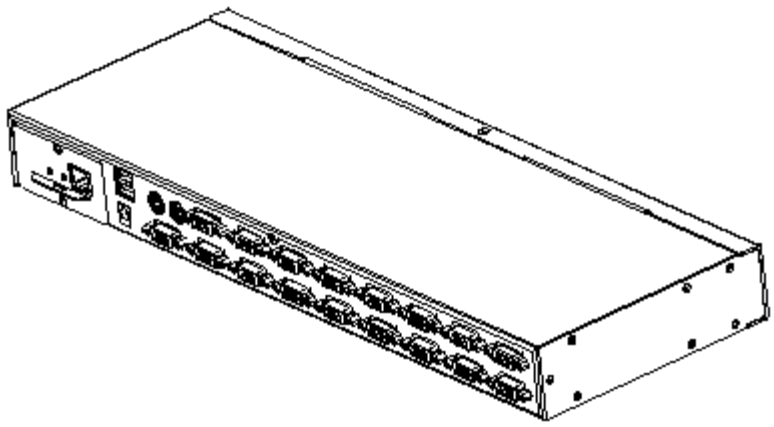

Single Device Installation

Note： Before the installation, make sure that the equipment is powered off. To prevent damage to the equipment during installation, make sure that all the devices installed are well grounded.

◆ **VGA port KVM module installation**

To install a single-level KVM, refer to the following online diagrams (numbered in the order of steps on the online graph) and do the following:

1.Plug your USB keyboard and mouse into the USB console port on the back panel of the switch.
2.Using a set of KVM cables corresponding to the model, plug the VGA connector into the VGA Port of any available VGA port on the switch.
3.Plug the corresponding VGA video connector, USB or PS2 connector of the KVM cable into the corresponding port on the PC.
4.Plug the power adapter supplied with this package into the AC power source, and plug the other end of the power adapter into the power jack on the switch.
5.Connect the network cable to the IP port of the IP module.
6.Turn on the computer.

Note:1. Make sure that all plugs are connected to the same group of KVM connection port jacks (all connected to Port1, or all connected to Port2).
2.IP module is an optional module of the product. If the product you purchased does not contain the module, please ignore the related operation in Step 5.
3.Before using the IP module, please make the appropriate configuration and network debugging after the access to the network you want to connect, or may fail to connect because of normal remote control. (Refer to the manual of the IP module product manual for how to use and debug the IP module.

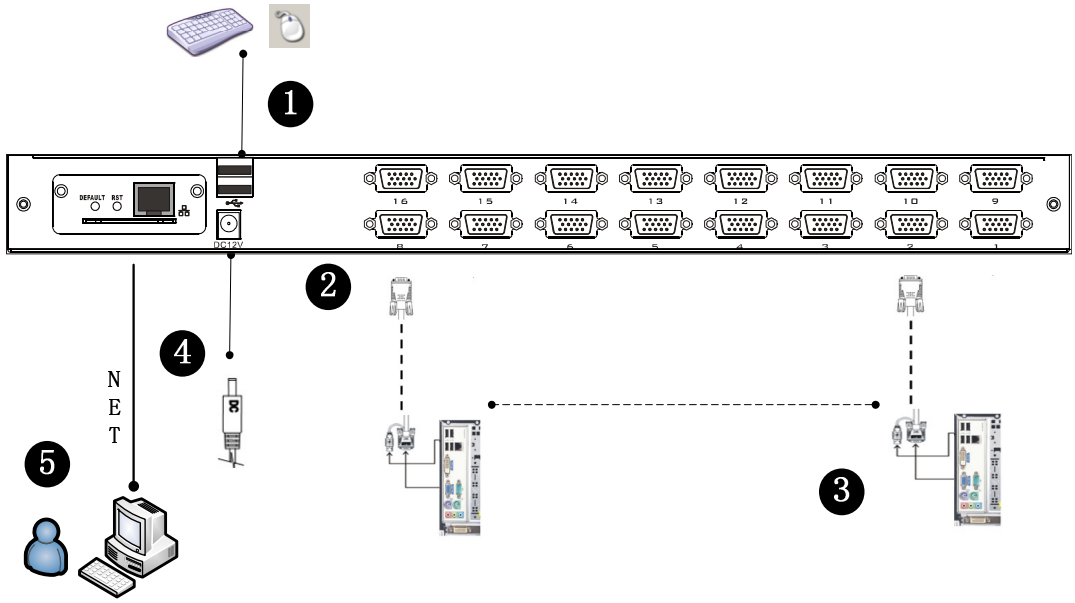

◆ **CAT5 port KVM Module Installation**

To install a single-level KVM, refer to the following online diagrams (numbered in the order of steps on the online graph) and do the following:

1. Plug your USB keyboard and mouse into the USB console port on the back panel of the switch.
2. Use a set of CAT5e / 6-wire connectors to plug into any available CAT5 Port on the switch.
3. Plug a CAT5e / 6-wire connector into the CAT5 connector on the Dongle module of the KVM, and connect the corresponding VGA video connector, USB or PS2 connector of the Dongle cable to the corresponding port on the PC.
4. Plug the power adapter supplied with this package into the AC power source, and plug the other end of the power adapter into the power jack on the switch.
5. Connect the network cable to the IP port of the IP module.
6. Turn on the computer.

Note: 1. Make sure that all plugs are connected to the same group of KVM connection port jacks (allconnected to Port1, or all connected to Port2).

2. The IP module is an optional module of the product.If the product you purchased does not include the module, please ignore the related operation in Step 5.
3. Before using the IP module, please make the appropriate configuration and network debugging after the access to the network you want to connect, or may fail to connect because of normal remote control. (Refer to the manual of the IP module product manual for how to use and debug the IP module.)
4. LCD KVM conversion module is divided into two types: PS2 and USB port, you can connect your computer to choose the appropriate conversion module to use.
5. Make sure you are connecting to a computer and LCD KVM switches have a good grounding protection altogether, or it may produce a video display problems
6. For display problems caused by transmission distance, electromagnetic interference, common ground, etc., it is recommended to use Category 6 shielded network cable to connect and try to improve the display effect

---

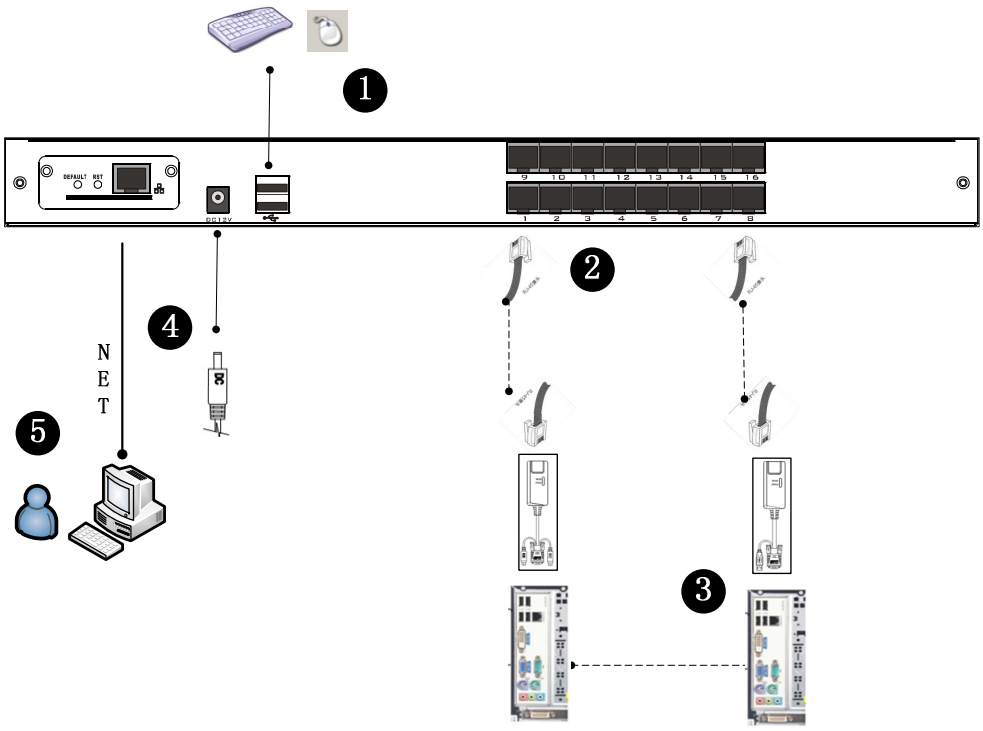

◆ **DVI port KVM module installation**

To install a single-level KVM, refer to the following online diagrams (numbered in the order of steps on the online graph) and do the following:

1. Plug your USB keyboard and mouse into the USB console port on the back panel of the switch.
2. Insert the audio cable plug of the microphone and the speaker into the corresponding type port.
3. Using a set of DVI KVM cable connectors corresponding to this module to plug into any of the available Port ports on the switch,DVI to DVI port, USB Type B to keyboard port, mouse port, composite audio plug into the audio jack.
4. Connect the AC adapter to the AC power source, and plug the other end of the power adapter into the power jack on the switch.
5. Connect the network cable to the IP port of the IP module.
6. Turn on the computer

Note:

1.LCD KVM conversion module is divided into two types: PS2 and USB port, you can connect yourcomputer to choose the appropriate conversion module to use.

2.Please make sure that the computer and the LCD KVM switch you are connecting to have a good common earth ground, otherwise a video display problem may occur.

3.For display problems caused by transmission distance, electromagnetic interference, common ground, etc., it is recommended to use Category 6 shielded network cable to connect and try to improve the display effect.

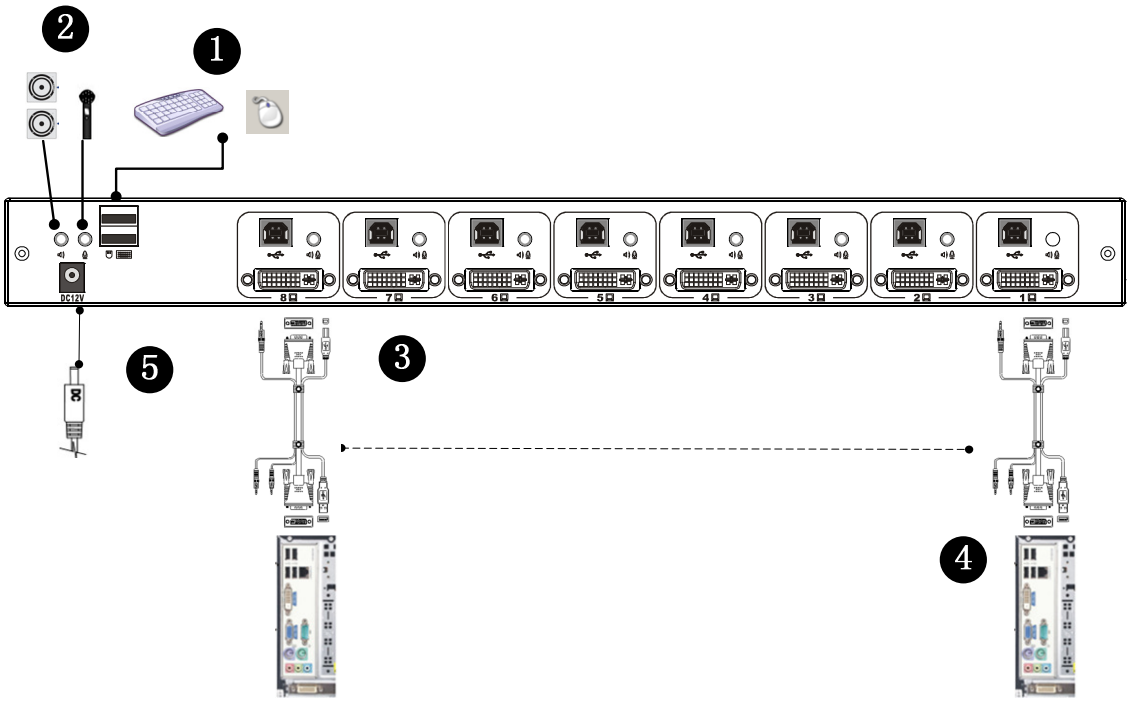

Installation of Single Port LCD KVM Switch

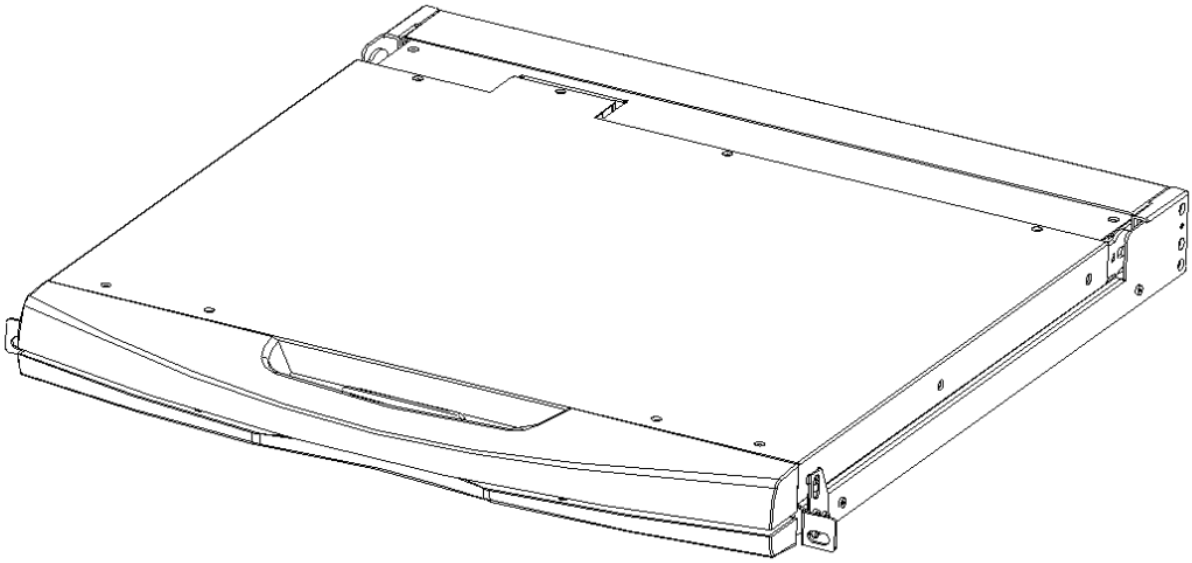

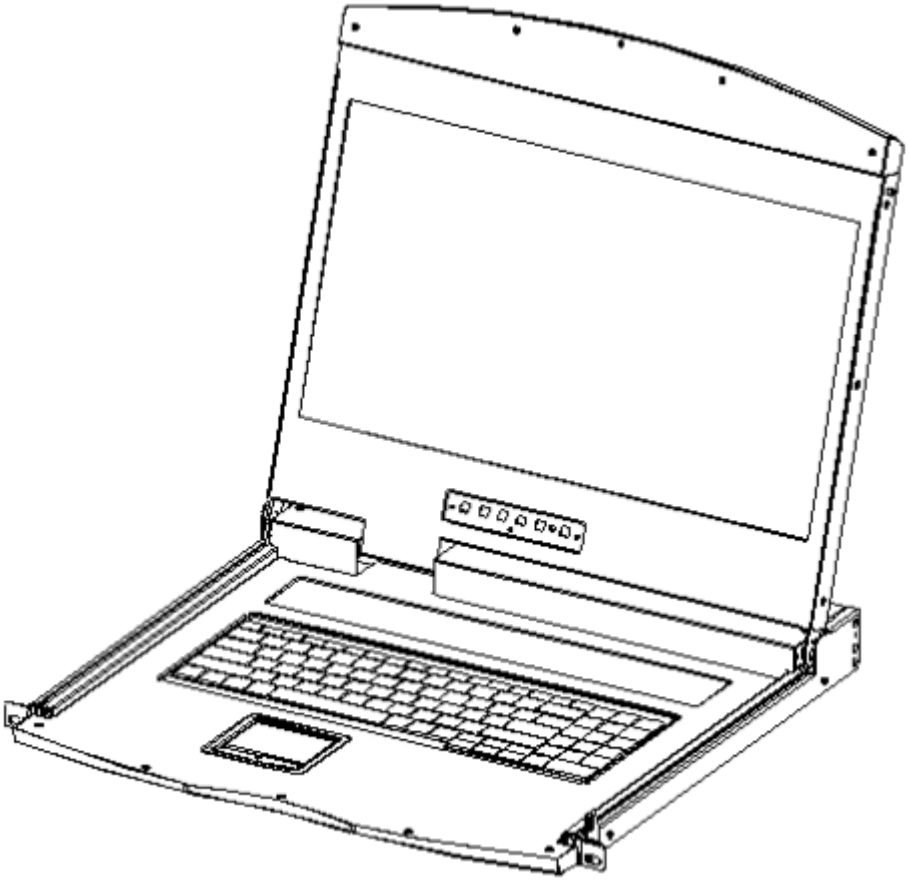

Single-port LCD KVM switch choose KVM cables to connect instead of multi-port use KVM module,divided into two kinds:VGA and DVI according to the port type.

◆ VGA Single port LCD KVM

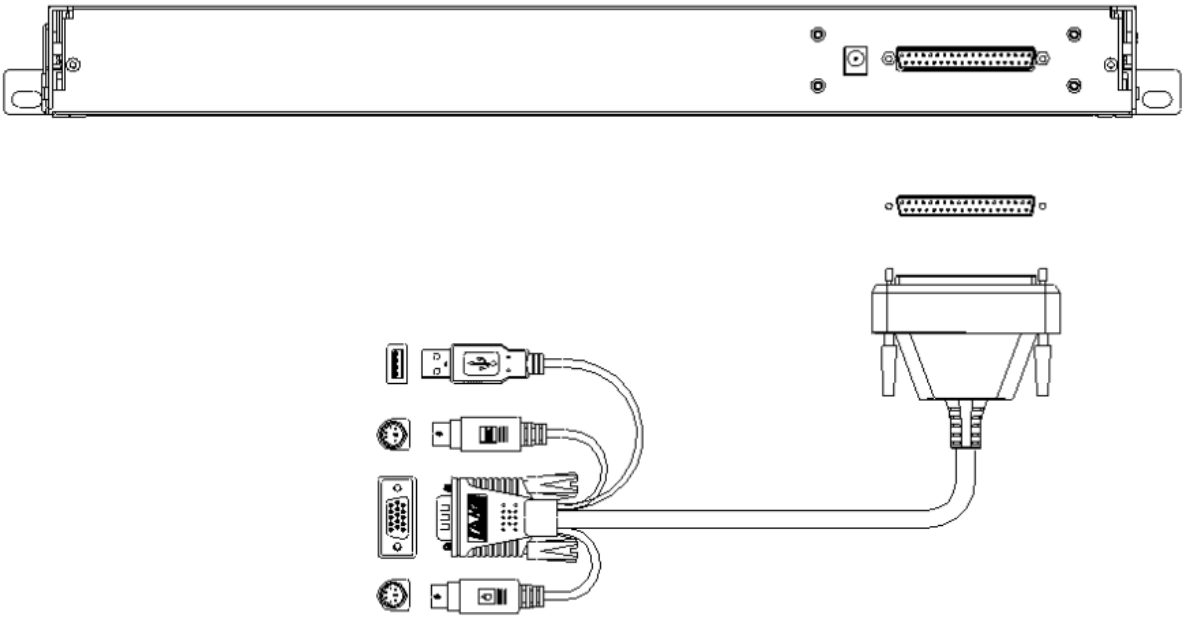

◆ DVI single port LCD KVM Switch

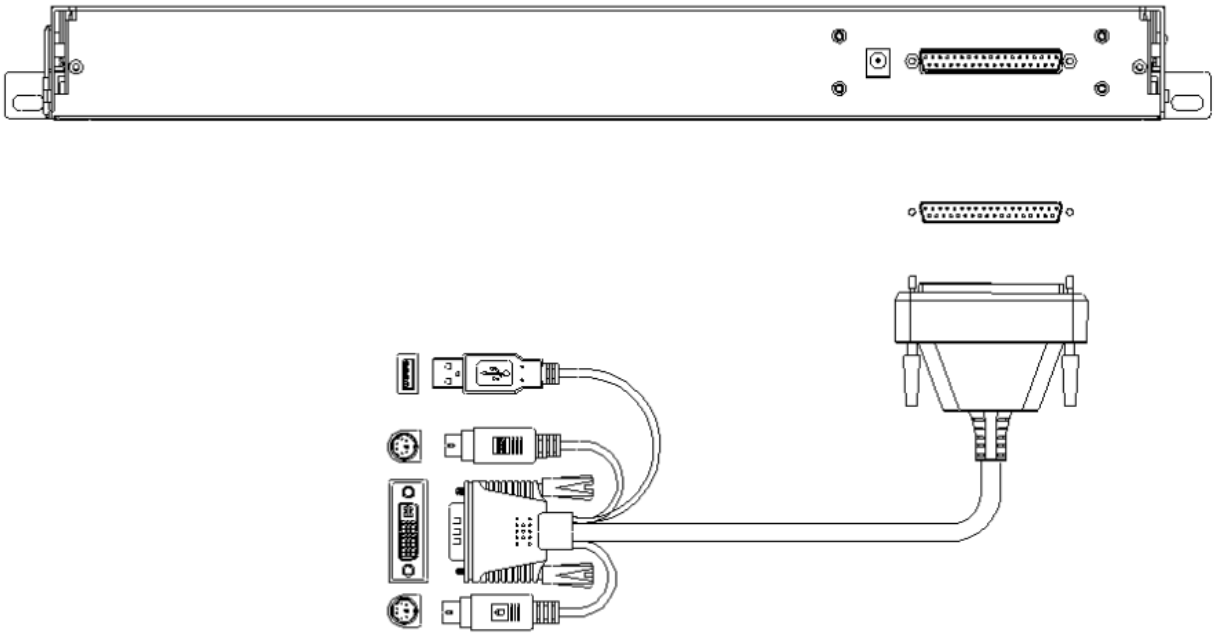

Note：Connect the DP37 port to the corresponding port on the back of the LCD,and then connect the video port of the other end to the video port of the computer. Then connect the port of PS2 or USB to the corresponding keyboard and mouse port of the computer, then power the computer and the LCD KVM switch.

Cascade Device Connection

This product can be cascaded to increase the number of control devices, combined with IP remote control mode can be flexibly used in a variety of user environment requirements.

◆ **VGA Port LCD KVM Switch Cascade**

In the VGA switch Cascade mode, the keyboard, mouse and computer connections is same with the stand-alone connection, this part will not repeat them, the number part of the description is as follows:

1. A cascaded KVM switch can be connected in two ways by using a USB KVM cable (as shown in connection number 2 in the figure) or a PS2 KVM cable (as shown in connection number 1 in the figure) Connect to the upper-level switcher.
2. The number of computers connected to each level can be freely increased or decreased according to your requirements. Refer to the connection method shown in figure 3.
3. Between the level of IP module can be optional remote control, can also be handed over to the KVM switch from the top of the local and remote as a unified control and management operations.

Note： This product cascade mode is divided into two levels, so you need to set the cascade connection mode switch OSDMenu with two levels of hotkey for two different hotkey combinations, or the OSDcan not be started when cascade.(Refer to the OSD chapter for details on the OSD Hot Key settings.)

Connection diagram please see the following figure (VGA portLCD KVM switch cascade)

◆ CAT5 Port LCD KVM Switch Cascade

In switch cascade mode, the keyboard, mouse and computer connections and stand-alone connection is the same, this part will not repeat them, the number part of the description is as follows:

1.The cascade KVM switch, have two connection methods, the use of USB KVM conversion module cable or PS2 KVM conversion module cable and a switch to the next level to connect. (Refer to the description of the CAT5 KVM switch product manual for how to connect the converter module.)

2.The number of computers connected to each level can be changed according to your needs. Refer to the connection port shown in figure 2, which is the connection port of Remote Control mode. It can provide the user to connect the control device through Remote Control console. Remote ControlPort switcher usage and connection method(Refer to the CAT5 KVM switch product manual for instructions.)）

3.IP modules can be selected for remote control, and can also be controlled by local and remote KVM switches from the upper layer as a unified control and management operation.

Note： This product cascade mode is divided into two levels, so you need to set two levels of OSDMenu hotkey for two different hotkey combinations in cascade mode, otherwise the cascade connection can not start the OSD normally. The OSD Hot Key settings are described in detail in the OSD chapter.)

Please make sure that your computer and LCD KVM switch are well grounded. Otherwise, the video display problem may occur. For the display problems caused by transmission distance, electromagnetic interference, common ground, etc., it is recommended to use Category 6 Screen cable to connect, try to improve the display.

The connection diagram is shown in the following figure (CAT5PortLCD KVM Switch Cascade).

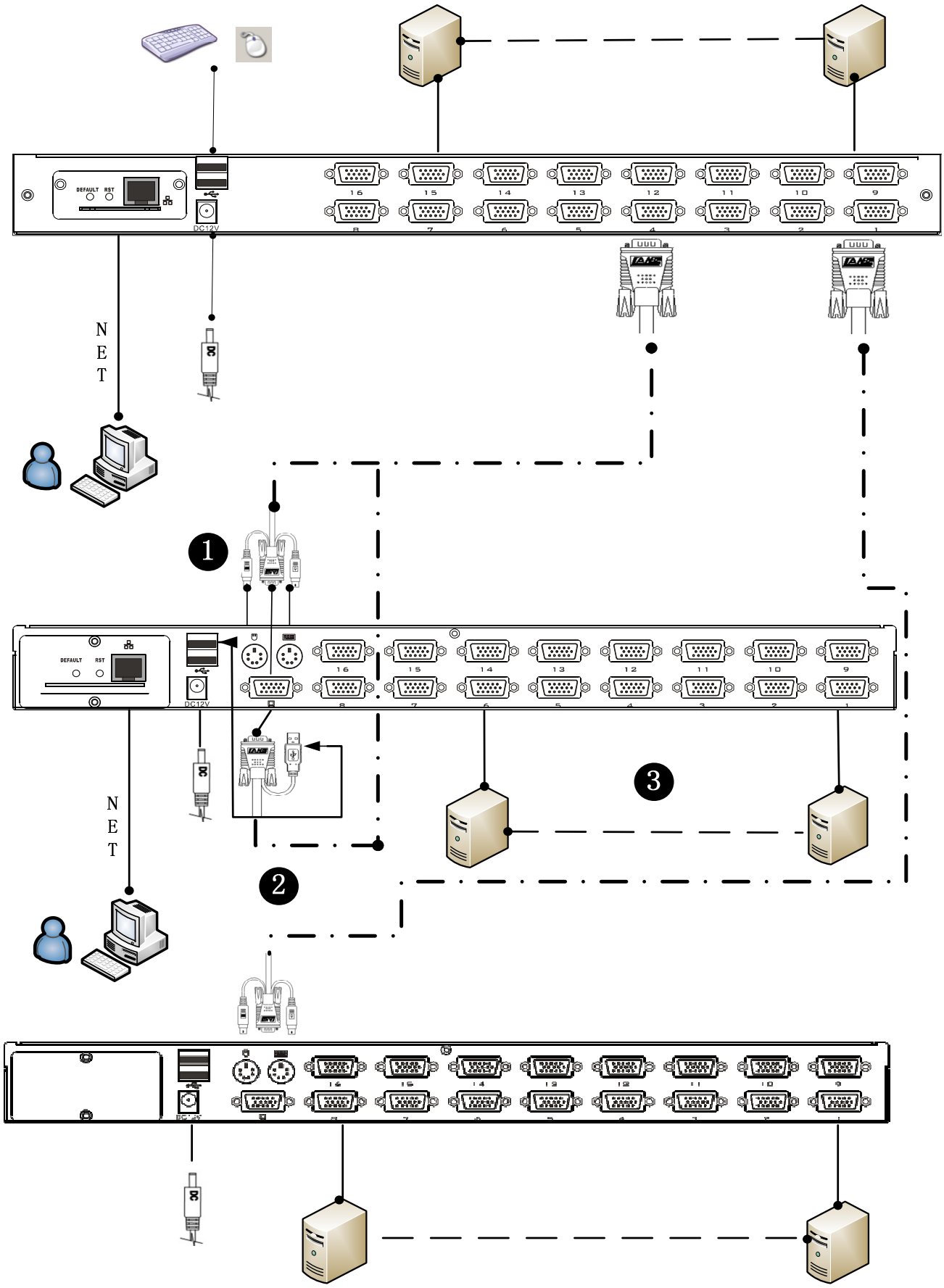

VGALCD KVM Switch Cascade

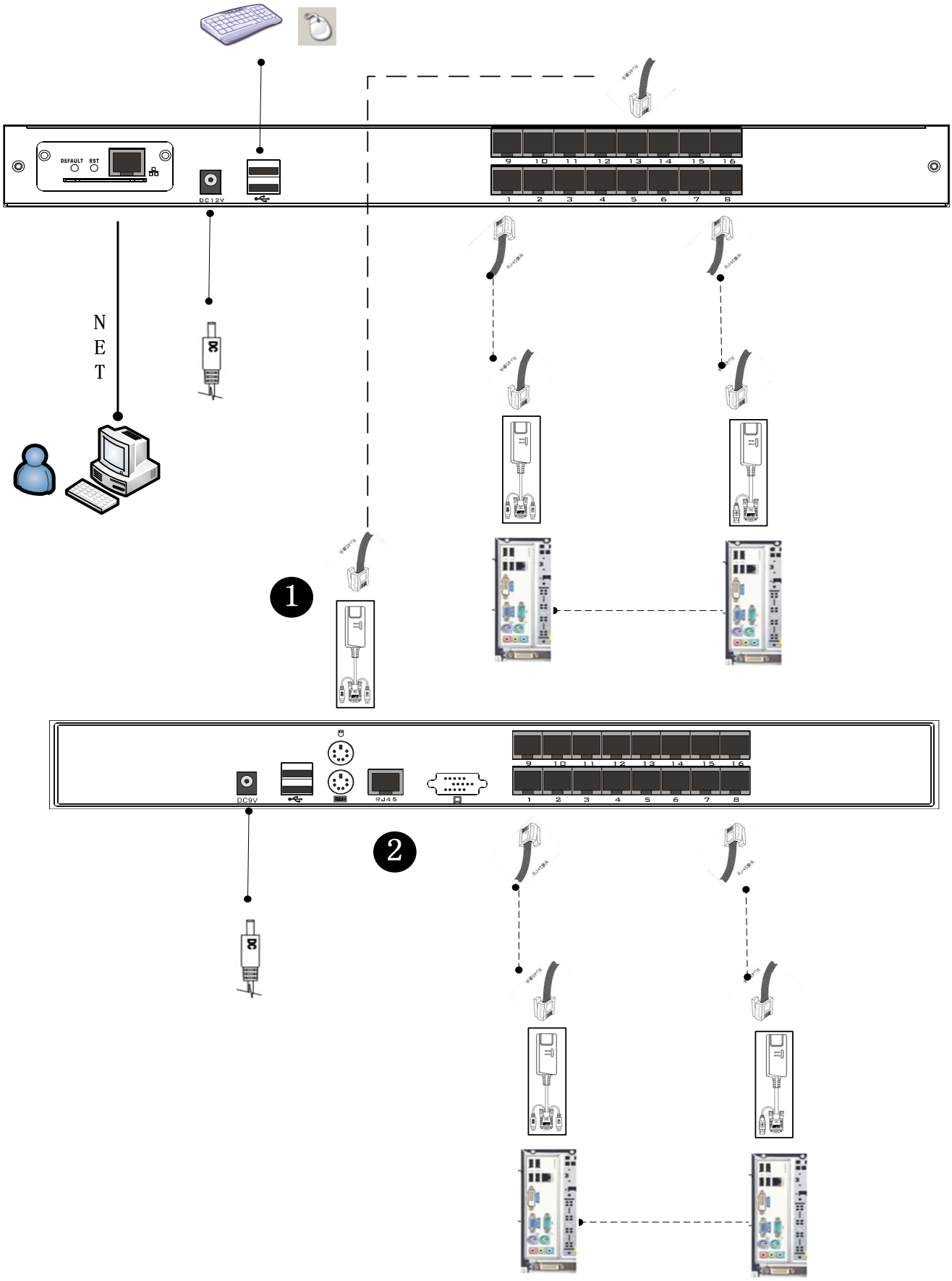

CAT5LCD KVMSwitch Cascade

Chapter3

Basic Operation

Hot Plug

The KVM switch supports hot-plug, removing and removing components by unplugging the cables connected to the computer's port without shutting down the switch.To make the hot swap function work properly, follow these steps:

Hot – PlugComputer Connection

In order for OSDMenu to correspond to the KVM connection port changes, you must reset OSDMenu to display the latest connection port information, OSD menu settings. Please refer to the OSDMenu section for more information about functions and usage.

Note: If your computer's operating system does not support hot-plug functionality, this feature may not function properly.

Hot – PlugConsole Port

This product also provides keyboard, mouse and display hot-plug function. This product provides keyboard and mouse port for two interface types. Users can select the corresponding device connection type according to their usage and carry out corresponding control operation.

Note: If you access the USB and PS2 keyboard, mouse device, you do not have to use two types of devices, otherwise, may cause the accused computer equipment mouse and keyboard response exception.

Connection Port Selection

The KVM switch can be used to quickly switch to any computer connected to the KVM in three modes: manual key selection, OSDMenu screen selection, and hotkey selection.

Switch the Selection Manually

Use the buttons on the front control panel to select a port.

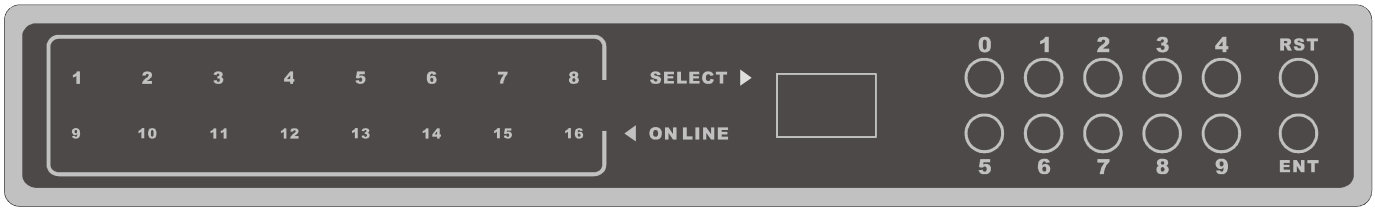

KVM switch button located in the top of the keyboard operating area, divided into three blocks, from left to right in order is the online indicator display area, Port switch to select the display area, Port switch digital button area.

- ◆ Online Indicator Display Area
  The LEDs in the display area are lit when the controlled computer connected to KVMPort is connected to the line. The LED indicating the port number is illuminated and you can see the KVM online Port status.
- ◆ Port Switch the Display Area
  The digital LED indicator in the display area shows the port serial number of the current working port when the working status is displayed, or the numeric key serial number you input when the key switch port changes.
- ◆ Port Switches the Numeric Keypad Area
  This area has the numeric keys of [0] - [9] and [RST] (reset button), [ENT] (confirm button), the number keys are used for Port selection, input the corresponding port number, 【ENT】 to finish the switch of Port. To reset the KVM switch, you need to click [RST] for 3-5 seconds to complete the KVM switch restart.

OSDMenu Screen Selection

◆ LCD OSDMenu key operation

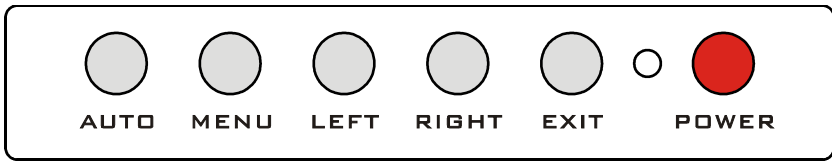

- 【AUTO】Press the key to set the display setting for the screen to automatically adjust to the resolution
- 【MENU】Press the key to perform the main function OSDMenu of the LCD screen, to select and set various functions of the screen
- 【LEFT】Press the key to select the direction of the OSD menu, and move the current selection to the left by one unit
- 【RIGHT】Press the key to select the direction of the OSD menu and move the current
- selection to the right by one unit
- 【EXIT】Press to exit the OSD menu
- 【POWER】Pressing the button allows you to turn the LCD screen on and off

- T PCLED display for the LCD screen status indicator, you can indicate three working status: red, green, do not show the state. "Red" indicates that the LCD screen has been powered, but no video signal input. "Green" indicates that the LCD normally displays the video signal of the

controlled computer. "No display" means the LCD screen has been powered off.

◆ KVM OSDMenu operation
（Refer to the OSD Operation chapter for more information.）

Hotkey Selection

This product offers four hotkey switching methods:
【SCRLL】+【SCRLL】+【NUM】
【CTRL】+【CTRL】+【NUM】
【ALT】+【ALT】+【NUM】
【SHIFT】+【SHIFT】+【NUM】
The default hotkey toggle key combination is [SCRLL] + [SCRLL] + [NUM] where [NUM] is the keyboard number 1-16, the keyboard combination hotkey input complete carriage return completed the command transmission, KVM switch will switch the corresponding number Of the Port computer. If you want to change the key combination of the hotkey, you can set and change it in the corresponding option of OSDMenu.

Power Off and Restart

If you need to power off the KVM switch, do the following before turning it back on:
1.Unplug the power supply to the KVM.
2.Turn off all computers connected to the KVM switch.
3.Wait about 10 seconds, then reconnect the KVM switch.
4.Turn on the computer.

Note: If the PS2 KVM cable is connected to the PC, you must connect the PS2 cable to the PC before powering on. Otherwise, the keyboard and mouse will not operate normally.

Open Way of LCD Screen

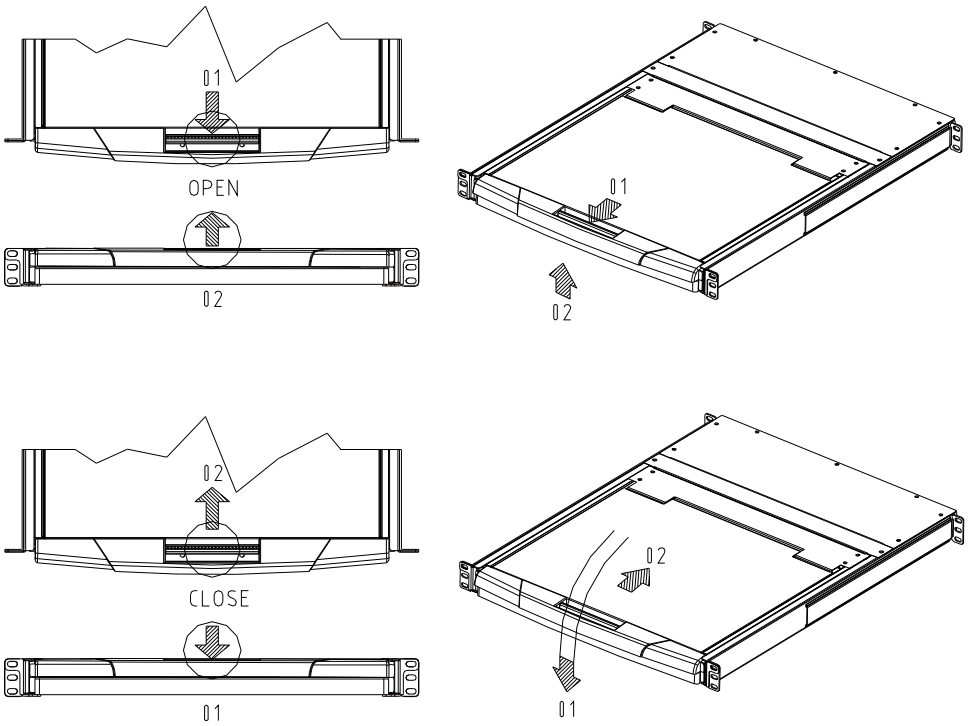

- When using, the LCD assembly can be unlocked from the side track by the handle of the upper part of the LCD unit. After unlocking, the LCD module can be pulled out from the slide rail. (Refer to the diagram above for operation)
- To open the LCD display screen, you can flip the screen upwards to fit the viewing angle only. The maximum angle that the LCD screen can be opened is 105 degrees -120 degrees. You can view the screen at any angle you like.

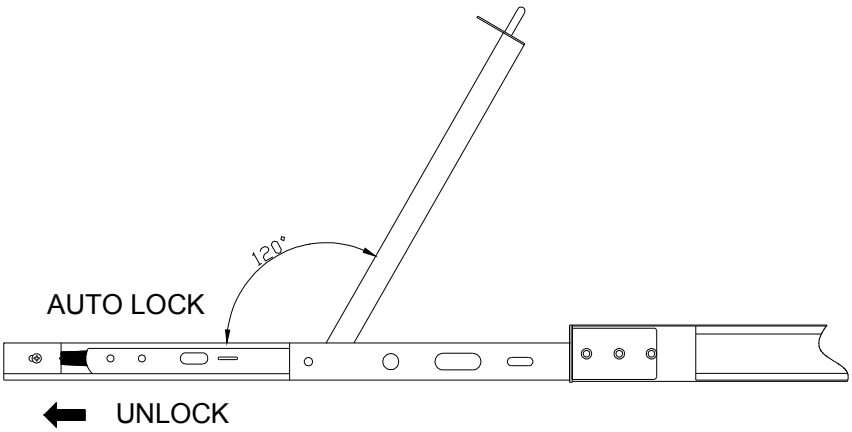

- The screen will automatically pull out the slide after the brake lock device to prevent the random sliding LCD screen components to bring the instability and may cause damage to the user collision.After the brake lock is activated, the LCD screen will limit the operation of pushing the slide rail.If you want to do the push-in operation of the LCD module, the unlocking action must be done first, and the unlocking switch is on both sides of the slide rail. (Please refer to the figure above for the specific operation). After unlocking, the LCD assembly can be pushed into the slide rail.

Note： 1.Push the LCD assembly into the slide, the unlock action and push action should be careful, improper operation may clip your finger.

2.When using the keyboard or mouse, do not use the body to depress the LCD module Otherwise, it may cause the slide rail to deform or not be able to be pushed into the slide rail

Chapter4

OSD Operation

OSD Introduction

OSD (On Screen Display), provides a menu driven interface to handle the computer switching procedure to provide instant access to any computer on the installation.

OSD Log in

The OSD function provides a two-level (administrator / user) password mechanism. The factory default setting is no need to login password authentication, so you are the first time to open the OSD main menu, no need to enter the login password to enter the OSD main menu screen for the corresponding operation. If you want to add this function, you can enter the OSD menu, in 【F6】 "SET" option to set the login password is set successfully, the subsequent login requires the correct administrator / user password to enter the OSD menu Interface operation. When you enter the setting options, some functions may need to be edited and modified by the administrator. The default administrator password is admin. You can also modify and change them as needed.

OSD Hot-Key

By default, you can type the [CTRL] key twice to have the OSD menu appear on the screen of the controlled display and see the connection information and status information about the connected computers on the KVM switch.

Note: You can change the keyboard hotkey on the OSD menu according to your needs. This product provides 4 sets of optional OSD menu hotkey combinations. You can select the operation according to your needs. (Please refer to the OSD menu for detailed description.)

OSD Main Menu

Active OSD, following picture will be shown on the screen:

- 【F1】 --- 【F6】 at the bottom of the screen is the function setting of OSD menu, and corresponding operation and setting of corresponding function by keyboard.
- After entering the OSD main screen, the port number in the center of the screen is the port number of the selected PC. To move up and down through the list one line at a time, use the【↑】【↓】Arrow Keys, press 【Enter】 to select the switch port.
- Please press【Esc】to exit the OSD menu interface
- To move up or down a row in the list, use the【↑】【↓】arrow keys. If the number of rows in the list is larger than the number that the screen can display, the screen scrolls.
- When the OSD menu is closed, a small blue window will appear on the screen showing the port number that is currently switched to.

OSD Main Screen Headings

Heading	Explanation
PN	This column lists the port numbers for all the CPU ports on the installation. The simplest method to access a particular computer is to move the highlight bar to it, then press [Enter].
QV	If a port has been selected for Quick View scanning, an arrowhead symbol displays in this column to indicate so.
PC	The computers that are powered on and are on line have an arrowhead symbol in this column to indicate so.
NAME	If a port has been given a name, its name appears in this column.

OSD Function

OSD functions are used to configure and control the OSD. For example, you can: rapidly switch to any port; scan selected ports only; limit the list you wish to view; designate a port as a Quick View Port; create or edit a port name; or make OSD setting adjustments.
To activate the OSD function key:
1. Press any function key【F1】--- 【F6】 at the bottom of main screen to input the function key.
2. On the sub-menu, move the selection column to the option, and then press the {Enter} key.
3. Press the【Esc】key to return to the previous menu.

F1 GOTO：

Press the 【F1】 key to start the GOTO function. The GOTO function allows you to switch directly to the connection port by typing the port name or its port number.

1. To use “NAM” method, move highlight bar to “NAME”, press 【Enter】, input name of a port, then press [Enter] to confirm.

2. To use PN method, move highlight bar to “PN”, press 【Enter】, input port number, then press 【Enter】 to switch. If the port number is invalid, it will remind the user to input again.

Note:1. When keying name, if there is a matching name, the matched name will appear on the screen, just press [Enter] to switch to that port.
2.In the "PN" port input box, only allow the input of numbers, such as the input of other characters are regarded as invalid input, and can hear the equipment issued by the warning tone.

To return to main menu, press [Esc].

F2 SCAN：

The "SCAN" function allows you to perform automatic port scanning of the connected computers. Users can switch ports in order to view the corresponding port computer status.

- The SCAN function can automatically scan from current selected port, the scan interval can be set by users.
- When scanning, a small window on the screen indicates the current port number.
- Press [Space] to stop scanning, and the KVM switches to the port last scanned.

F3 LIST：

The LIST function lets you broaden or narrow the scope of which ports the OSD displays on the main screen.

Many of the OSD functions only operate on the computers that have been selected for listing on the main screen with this function. The choices and their meanings are given in the table below:

Choice	Meaning
ALL	Lists all of the ports on the installation.
QVIEW	Lists only the ports that have been selected as Quick View Ports.
POWERED ON	Lists only the ports that have their attached computers powered on.
POWERED ON + QVIEW	Lists only the ports that have their attached computers powered on and have been selected as Quick View Ports.
QVIEW + NAME	Lists only the ports that have been selected as Quick View Ports and have name.
NAME	Lists only the ports that have names.

Move the highlight bar to the choice you want, then press [enter]. An icon appears before the choice to indicate that it is the currently selected one.

After you make your choice and press [Enter], you return to the OSD main screen with the newly formulated list displayed.

F4 QV：

QV function can select port as Quick View.

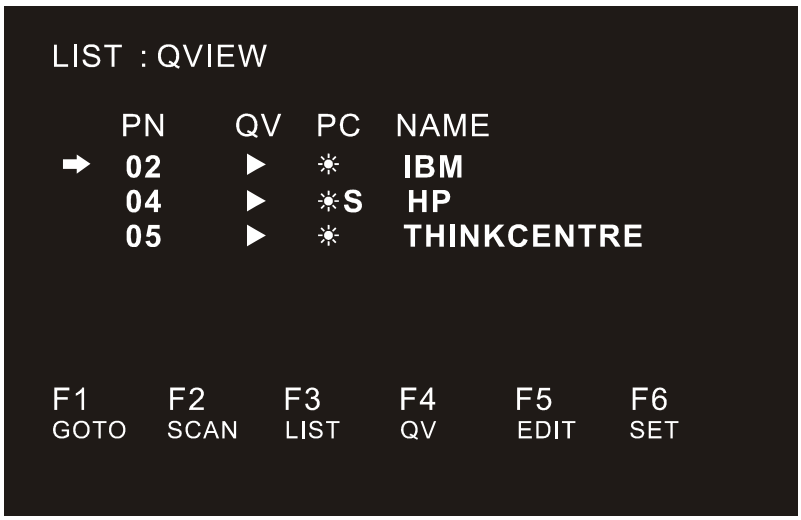

Move the highlight bar to a port, press [F4], an icon of up triangle appears. Press [F4] again, the icon disappears.

F5 EDIT：

EDIT function creates or edits the name of a port. Press [F5], a pink edit box will appear on the screen. Input name, and then press [Enter], the port is set a name and it will also appear on the screen.

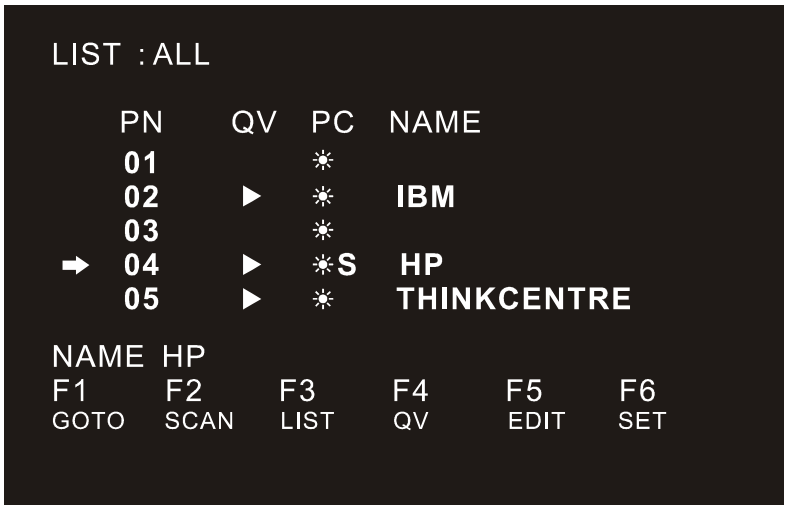

F6 SET：

SET function settings can be set to the administrator and the user to set the OSD menu. The related functions and user rights related settings, such as management settings login password, display mode, switch hotkey adjustment and so on.

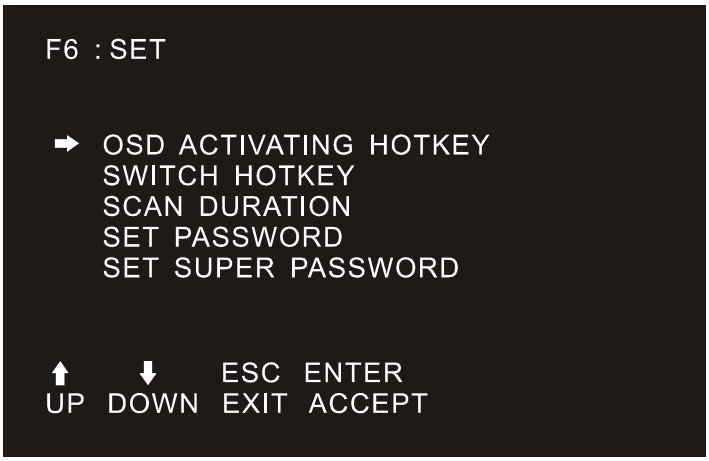

To change your settings:

1. Move the selection column to this option, press 【Enter】to enter a setting option.

2.After selecting an item, the sub-menu and the further options provided will appear. To select it, double-click the mouse or move the selection column to the option, and then press the [Enter] key, an icon will appear. Select the option before to indicate that the item has been selected. The settings are described in the following table:

Settings	Function
OSD ACTIVATING HOTKEY	OSD Menu Activates hotkey combination selection settings
SWITCH HOTKEY	KVM port switch hot-key combination selection setting
SCAN DURATION	Port scan dwell time setting
SET PASSWORD	User login password settings
SET SUPER PASSWORD	The administrator login password settings
CLEAR THE NAME LIST	Clear the port name setting
RESTORE DEFAULT VALUE	Reset
LOCK CONSOLE	OSD Menu Password Login Functionsettings

OSD ACTIVATING HOTKEY

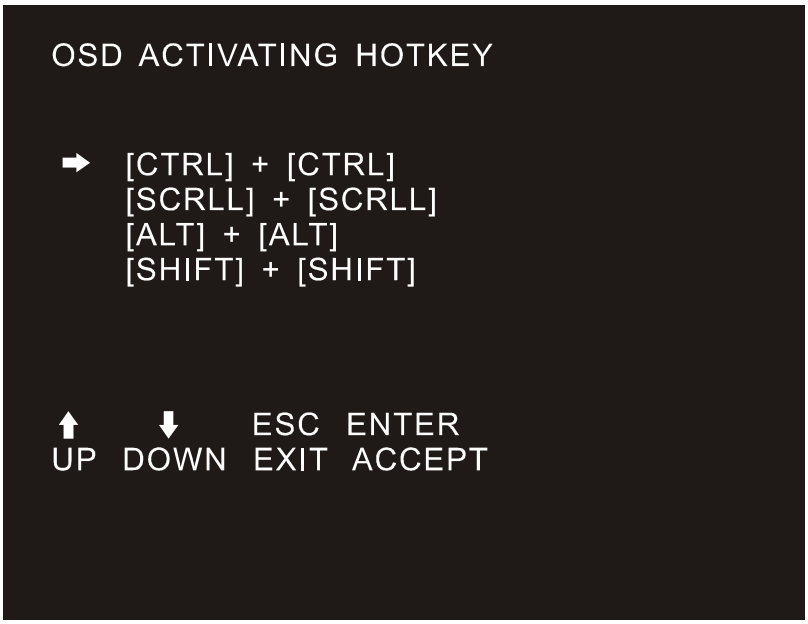

It provides you with four hotkey combinations:

You can use the keyboard 【↑】 【↓】 to move cursor to select, and then press 【Enter】 key to save. The default is to use 【CTRL】【CTRL】as the OSD menu start hotkey.

SWITCH HOTKEY

It provides you with four hotkey combinations:

【SCRLL】【SCRLL】【NUM】、【CTRL】【CTRL】【NUM】、【ALT】【ALT】【NUM】、【SHIFT】【SHIFT】【NUM】You can use the keyboard 【↑】 【↓】 to move cursor to select, and then press 【Enter】key to save. The default is to use【SCRLL】【SCRLL】【NUM】 as the OSD menu start hotkey.

【NUM】 is the numeric keypad of the keyboard. The valid numeric range is 【1】 - 【16】.

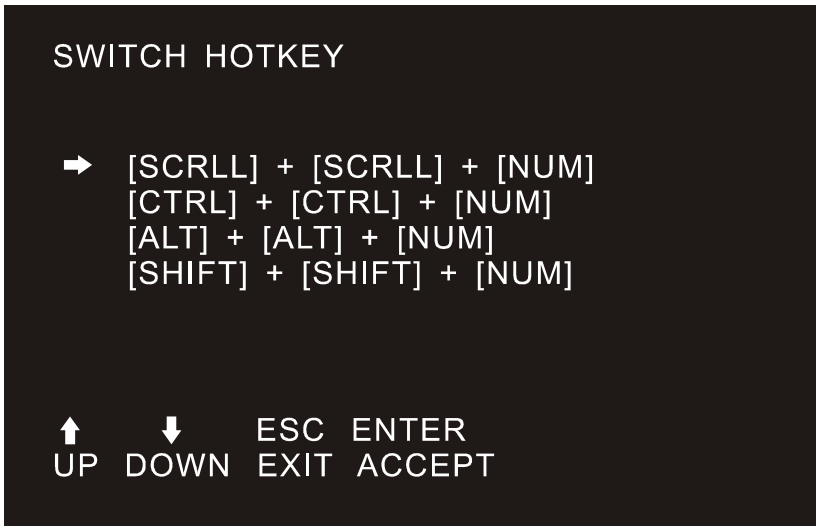

SCAN DURATION

Duration for scanning one port.
Options are 3 seconds, 5 seconds, 10 seconds, 15 seconds, 20 seconds, 30 seconds, 40 seconds, 60 seconds. Move the highlight bar to an option and press [Enter] to select it.

SET PASSWORD

Set new password.
First enter old password, then enter new password and confirm it. The new password is set. If error occurs, the screen will remind users.

SET SUPER PASSWORD

When setting the administrator password, you need to enter the correct password. Before new password is updated, input the previous password twice, the new password to take effect

CLEAR THE NAME LIST

This function clears the name of a port in the OSD menu. If you use this function, all the port names will be emptied, so please do it carefully. When doing this, you need to verify the password of the administrator, input 【Y】key, then press【Enter】 to confirm the operation. To cancel this operation, input【N】key, and then press【Enter】to confirm the cancel operation, or keyboard input 【Esc】directly back.

RESTORE DEFAULT VALUE

Restore settings to default value. This setting will make all the OSD menu options to restore the initial settings, so please be careful to do this. When doing this, you need to verify the password of the administrator, input 【Y】key, then press【Enter】 to confirm the operation. To cancel this operation, input【N】key, and then press【Enter】to confirm the cancel operation, or keyboard input 【Esc】directly back.

LOCK CONSOLE

You cannot switch or scan after you lock the console (including switch by push button on the panel or OSD). You need to enter password to set.
Note: After Locking the console, you can also unlock the console by this option. It also needs password verification.

（**Descriptions of the OSDMenu functions may vary. Refer to the description of each interface KVM switch manual for details.**）

Appendix

Safety Instruction

In General

- This product is for indoor use only.
- Please read all the instructions for future reference.
- Follow all the warnings and instructions on the device.
- Do not place this equipment on any unstable surface (such as cart, stand, table, etc.). If this equipment falls, it will cause serious damage.
- Do not use this equipment near water.
- Do not place this equipment near or over the radiator or heating equipment.
- The enclosure is provided with slots for heat dissipation and ventilation. To prevent overheating during operation, do not block or cover the openings.
- Do not place the device on a soft surface (such as a bed, sofa, blanket, etc.). This will block the fan opening and can not be placed in a sealed environment unless proper ventilation is provided.
- Do not spray any liquid on the device.
- Before cleaning, please unplug the power from the wall socket. Do not use any liquid or foam cleaner. Use a damp cloth to clean it.
- Please use this equipment according to the type of power supply on the label. If you are not sure whether the power supply type is available, please contact your dealer or your local power company.
- This equipment is designed for IT distribution system with 100V ~ 230V phase-to-phase voltage.
- To prevent damage to your device, it is important that all equipment be properly grounded
- Do not place anything on the power cord or cable, and route the power cord and cable routing to avoid tripping over it.
- If the equipment uses an extension cord, make sure that the total capacity of all products using the line does not exceed the current carrying capacity of the line. Ensure that the total current of all products plugged into the wall outlet does not exceed 15A.
- Use a surge suppressor, regulator, or uninterruptible power supply (UPS) to help protect your system from sudden, transient, and reduced power.
- Please fix the system cable and power cord properly, and make sure nothing is pressing on the cable.
- Do not insert objects into the machine through the slots of the housing. There is a risk of exposure to dangerous voltage points or short-circuiting of parts resulting in fire or electric shock.
- Do not attempt to repair the equipment by yourself. Please consult a qualified service person for support.
- If any of the following conditions occur, unplug the unit from the wall outlet and return it to a qualified service representative for repair.
  - The power cord or plug is damaged or worn
  - Liquid is spilled into the unit
  - The device is exposed to rain and water
  - The device has been dropped or the housing has been damaged

- The function of the device is obviously changed
- The machine can't be operated normally as instructed by the operating instructions.

◆ Adjustment only for the control functions covered by the operating instructions, and other inappropriate operations may cause damage, requiring more qualified personnel to perform repairs

Cabinet Installation

◆ Before cabinet installation, make sure that the fixing device is securely fastened to the rack and extended to the ground. The weight of the whole rack can be dispersed on the floor. Mount the front and side securing devices in a single rack or the front-end fixtures in combination with multiple racks before starting rack work.

◆ Install from the bottom to up in the cabinet, and install the heaviest things first.

◆ When extending the equipment from the rack, make sure that the rack is stable and stable.

◆ Be careful when releasing the latch by pressing the device rails and sliding the unit into the rack. The track of the slide rail may clip to your finger.

◆ After mounting the device to the rack, carefully spread the rails to the locked position, and then slide the unit into the rack.

◆ Do not overload the AC supply branch circuit that supplies power to the rack. The total load capacity of the rack should not exceed 80% of the branch circuit.

◆ Make sure that all equipment used on the rack - including electrical outlets and other power connectors - is properly grounded.

◆ Make sure you have provided proper airflow for the equipment on the rack.

◆ Make sure that the operating temperature of the rack environment does not exceed the maximum operating temperature set by the manufacturer.

◆ Do not stand on or stand on any other equipment while you are servicing other equipment on the rack.

WARNING: Slide / rail (LCD / KVM) mounting equipment can not be used with support brackets or work areas.

Specification

VGA Series LCD KVM Switch Specification

Type			1 Port	4 Port	8 Port	16 Port
Model			AS-7100ULS	AS-7104ULS	AS-7108ULS	AS-7116ULS
Computer Connection	Direct Connects		1	4	8	16
	Maximum Connects		1	64	128	256
CPU Port Selection			/	OSD Menu, Front panel buttons, Hot Key, IP Remote Control (Optional)		
Connectors	Console Connector		DB 37PIN			
	PC Connector	Monitor, Keyboard/Mouse Switch Module	1 x VGA DB15, USB/PS.2	4 x VGA DB15, Female Blue	8 x VGA DB15, Female Blue	16 x VGA DB15, Female Blue
	Power		1 x DC Jack			
	Network Port		/	1 x RJ45		
Switch	Connection Port Selection		/	KVM Operation Panel Digital keys		
	KVM Reset		KVM Operation Panel Function Keys			
	IP Module Reset		/	1 x semi-embedded key		
	IP Module Default		/	1 x semi-embedded key		
LED's	Selected		/	Nixie Tube Display		
	Online		/	4 x Red	8 x Red	16 x Red
	IP Network		/	1 x Green, 1 x Orange		
Analog Mode	Keyboard/Mouse		USB, PS/2			
Resolution (Max)			1920 x 1200 @ 60HZ Local & Remote			
Scan time interval			3, 5, 10, 15, 20, 30, 40, 60s (3s by default)			
Operating Environment	Operating temperature		-10-50˚C			
	Storage temperature		-20-60˚C			
	Humidity		0-80%RH, No Condensation			
PhysicalProperties	Housing		Plastic	Metal		
	Dimension		50*77*24.5mm	148.4*445*45mm		
	Weight		0.18kg	2.7kg	3.32kg	4.96kg

CAT5 Series LCD KVM Switch Specification

Type			4 Port	8 Port	16 Port
Model			AS-7104TLS	AS-7108TLS	AS-7116TLS
Computer Connection	Direct Connects		4	8	16
	Maximum Connects		64	128	256
CPU Port Selection			OSD Menu, Front panel buttons, Hot Key, IP Remote Control (Optional)		
Connectors	Console Connector		DB 37PIN		
	PC Connector	Monitor, Keyboard/Mouse Switch Module	4 x VGA DB15 Female Blue, 4 x USB OR 4 x PS/2	8 x VGA DB15 Female Blue, 8 x USB OR 8 x PS/2	16 x VGA DB15 Female Blue, 16 x USB OR 16 x PS/2
		Switch Module Port	4 x RJ45	8 x RJ45	16 x RJ45
	Power		1 x DC Jack		
	Network Port		1 x RJ45		
Switch	Connection Port Selection		KVM Operation Panel Digital keys		
	KVM Reset		KVM Operation Panel Function Keys		
	IP Module Reset		1 x semi-embedded key		
	IP Module Default		1 x semi-embedded key		
LED's	Selected		Nixie Tube LED Display		
	Online		4 x Red	8 x Red	16 x Red
	IP Network		1 x Green, 1 x Orange		
Analog Mode	Keyboard/Mouse		USB, PS/2		
Resolution (Max)			1920 x 1200 @ 60HZ Local & Remote		
Scan time interval			3, 5, 10, 15, 20, 30, 40, 60s (3s by default)		
Operating Environment	Operating temperature		-10-50˚C		
	Storage temperature		-20-60˚C		
	Humidity		0-80%RH, No Condensation		
PhysicalProperties	Housing		Metal		
	Dimension		148.4*445*45mm		
	Weight		2.25kg	2.74kg	3.80kg

DVI Series LCD KVM Switch Specification

Type			1 Port	4 Port	8 Port
Model			AS-7100DLS	AS-7104DLS	AS-7108DLS
Computer Connection	Direct Connects		1	4	8
CPU Port Selection			/	OSD Menu, Front panel buttons, Hot Key	
Connectors	Console Connector		DB 37PIN		
	PC Connector	Expansion Interface	/	1 x USB Type A Female (Front expansion Keyboard, Mouse Interface)	
		Microphone	/	4 x Mini Stereo Female (Pink)	8 x Mini Stereo Female (Pink)
		Audio Speaker	/	4 x Mini Stereo Female (Green)	8 x Mini Stereo Female (Green)
		Mouse/Keyboard	1 x USB Type B Female	4 x USB Type B Female	8 x USB Type B Female
		Monitor	1 X DVI-1	4 x DVI-I	8 x DVI-I
		Mixed Audio Connector	1 x Mini Stereo Female (Black)	4 x Mini Stereo Female (Black)	8 x Mini Stereo Female (Black)
	Power		1 x DC Jack		
Switch	Connection Port Selection		/	KVM Operation Panel Digital keys	
	KVM Reset		/	KVM Operation Panel Function Keys	
LED's	Selected		/	Nixie Tube LED Display	
	Online		/	4 x Red	8 x Red
Analog Mode	Keyboard/Mouse		USB, PS/2		
Resolution (Max)			1920 x 1200 @ 60HZ Local & Remote		
Scan time interval			3, 5, 10, 15, 20, 30, 40, 60s (3s by default)		
Operating Environment	Operating temperature		-10-50˚C		
	Storage temperature		-20-60˚C		
	Humidity		0-80%RH, No Condensation		
PhysicalProperties	Housing		Plastic	Metal	
	Dimension		50*77*24.5mm	148.4*445*45mm	
	Weight		0.3kg	3.69kg	4.97kg

LCD Module Specifications

Function		17inchLCD module	19inchLCD module	19inchwide-screen LCD module
LCD Display Assembly	LCD Screen Size Ratio	17inch4:3	19inch4:3	19inch16:9
	LCD Screen Type	SXGA TFT-LCD		Wide AHVA TFT-LCD
	Viewing Area	337.920(H) × 270.336(V)	376.32 (H) x 301.056 (V)	408.96(H) x 230.04(V)
	Resolution	1280*1024@60HZ		1980*1080@60HZ
	Support color	16.7M color（RGB 6 bit + Hi_FRC）		16.7Mcolor,True 8 bit
	Contrast	1000 : 1 (Typ)		
	Backlight	LED		
	Pixel spacing	0.264x0.297mm	0.294x0.294mm	300*300um
	LEDService life	100,000Hours		
	Nominal Input Voltage	+5.0V		
Keyboard	Keyboard Layout	Ultra-thin US100 key,Stand alone Removable keyboard. (Keyboard language format optional)		
	Compatible	Microsoft Windows9、Me/NT/2000/XP、WIN7、Server2003、 WIN8、WIN10		
	Port	Standard PS/2;USB （Chocolate keyboard）		
	Service life	>1,000,000 times		
Mouse	Mouse Type	Touch Mouse		
	Port	Standard PS/2		
	X/Y resolution	〉1000 point/inch,（40x40/mm)		
	Service life	>1,000,000 times		

Warranty Conditions

The Company shall not be liable for damages up to the amount paid by the Customer for the Products. In addition, the Company does not assume any direct, indirect, special, incidental or consequential damages resulting from the use of this product or the enclosed CD-ROM, documentation, etc…; The Company makes no warranty, express, implied or statutory, regarding the content and use of this document and specifically disclaims any implied warranties of merchantability, fitness for a particular purpose, suitability or fitness for a particular purpose.

NOTE: This equipment has been tested and found to comply with the limits for a Class A digital device, pursuant to part 15 of the FCC Rules. These limits are designed to provide reasonable protection against harmful interference when the equipment is operated in a commercial environment. This equipment generates, uses, and can radiate radio frequency energy and, if not installed and used in accordance with the instruction manual, may cause harmful interference to radio communications. Operation of this equipment in a residential area is likely to cause harmful interference in which case the user will be required to correct the interference at his own expense.

This device complies with Part 15 of the FCC Rules. Operation is subject to the following two conditions:(1)this device may not cause harmful interference, and (2) this device must accept any interference received, including interference that may cause undesired operation.

The manufacturer is not responsible for any radio or TV interference caused by unauthorized modifications to this equipment. Such modifications could void the user's authority to operate the equipment.