Jiangyin SINBON Electronics Co., Ltd.
288 Chengjiang Middle Rd.,
Jiangyin, Jiangsu, China
Tel: +86-510-86404098
Fax: +86-510-86404940

Product Specification

NACS Charging Cable Assembly, Final
80A @ 240VAC

JUL 13 ,2023

PROPRIETARY DOCUMENT

The purpose of this specification is to define the scope of supply offered by SINBON. This document may not, in whole or in part, be duplicated or disclosed without the written permission of the SINBON Product Specification author.

Jiangyin SINBON Electronics Co., Ltd.
288 Chengjiang Middle Rd.,
Jiangyin, Jiangsu, China
Tel: +86-510-86404098
Fax: +86-510-86404940

Table of Contents

1. Product Overview

2. Applicable Standard

3. Product Feature

4. Technical Data

5. Service Terms

Jiangyin SINBON Electronics Co., Ltd.
288 Chengjiang Middle Rd.,
Jiangyin, Jiangsu, China
Tel: +86-510-86404098
Fax: +86-510-86404940

Product Overview

SINBON NACS Charging cable assembly with Vehicle connector and open cable end for charging electric vehicle and plug-in hybrid electric vehicle with alternating current by Tesla vehicle charging inlets, for installation at electric vehicle supply equipment, in accordance with NACS.

The NACS 32A/40A/50A/65A/80A charging connector provides Level 2 or 3 charging solution for NACS vehicles. The connector is manufactured with a built-in temperature sensor for ver-temperature protection and a RF transmitter to remotely open charge port doors. The transmitter is available in two frequencies for regional compliance.

Jiangyin SINBON Electronics Co., Ltd.
288 Chengjiang Middle Rd.,
Jiangyin, Jiangsu, China
Tel: +86-510-86404098
Fax: +86-510-86404940

Applicable Standard

TS-0023666

North American Charging Standard

IEC 62196

Plugs, socket-outlets, vehicle connectors and vehicle inlets – Conductive charging of electric vehicles

IEC 61851

Electric vehicle conductive charging system

Product Feature

- Safe and Stable
- Ergonomic
- High-structure Strength
- Highly Waterproof
- Low Heat Productivity
- UV-resistant
- Built-in Temperature Sensor
- Flame Retardant

Jiangyin SINBON Electronics Co., Ltd.
288 Chengjiang Middle Rd.,
Jiangyin, Jiangsu, China
Tel: +86-510-86404098
Fax: +86-510-86404940

Technical Data

PERFORMANCE SPECIFICATION

Model Number	A9604566
Product Type	Charging Connector Assembly
Compatibility	AC
Rated Voltage (Nominal)	240 VAC
Rated Current	80A
Power Conductor Connection Method	Customized
Insulation Resistance	≥ 500 MΩ
Rated Drop Resistance	100 drops（Room temperature 1m）
Insertion / Withdrawal Force	＜ 90N
Flammability Rating	VW-1 For Cable V-0 for All Plastic Parts

ENVIRONMENTAL SPECIFICATION

Ambient Temperature	-40°C to +85°C
Operating Temperature	-40°C to +50°C
Maximum Elevation	3,000 m
Operating Humidity	95%@50°C, non-condensing
Protection Degree	IP67
UV Resistance	F1 per UL 746C

Jiangyin SINBON Electronics Co., Ltd.
288 Chengjiang Middle Rd.,
Jiangyin, Jiangsu, China
Tel: +86-510-86404098
Fax: +86-510-86404940

ELECTRICAL SPECIFICATION

Low Voltage Electrical Connector	Customized
Low Voltage Electrical Terminal	Customized
Temperature Sensor Type	NTC or PT1000
Temperature Sensor Threshold	Customized
RF Transmitter Frequency	315MHz

MECHANIAL SPECIFICATION

Dimensions (Overall)	46.5mm×72.1mm×213.9mm
Cable Diameter	19.5mm
Cable Length	5m, Others(Customized)

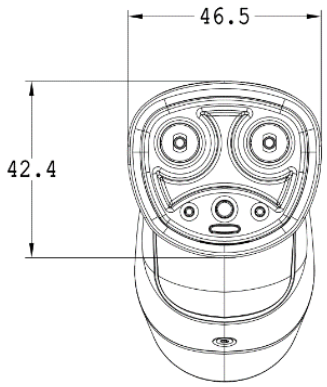

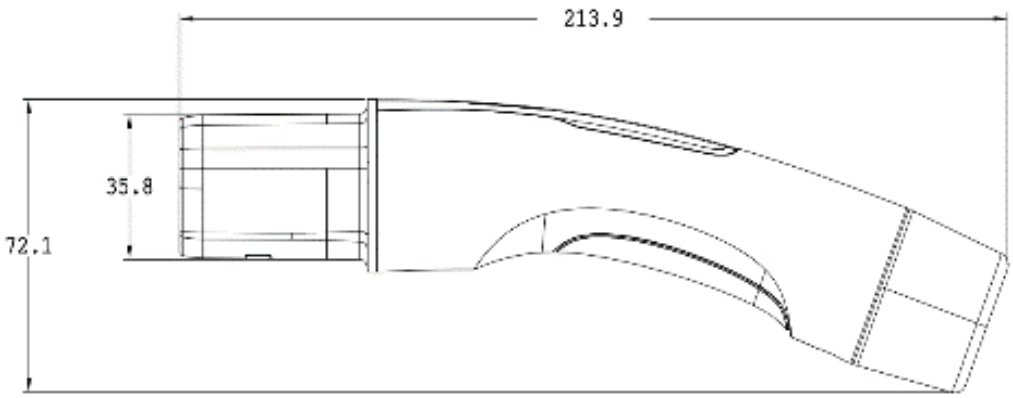

Jiangyin SINBON Electronics Co., Ltd.
288 Chengjiang Middle Rd.,
Jiangyin, Jiangsu, China
Tel: +86-510-86404098
Fax: +86-510-86404940

INSTALLATION INSTRUCTION

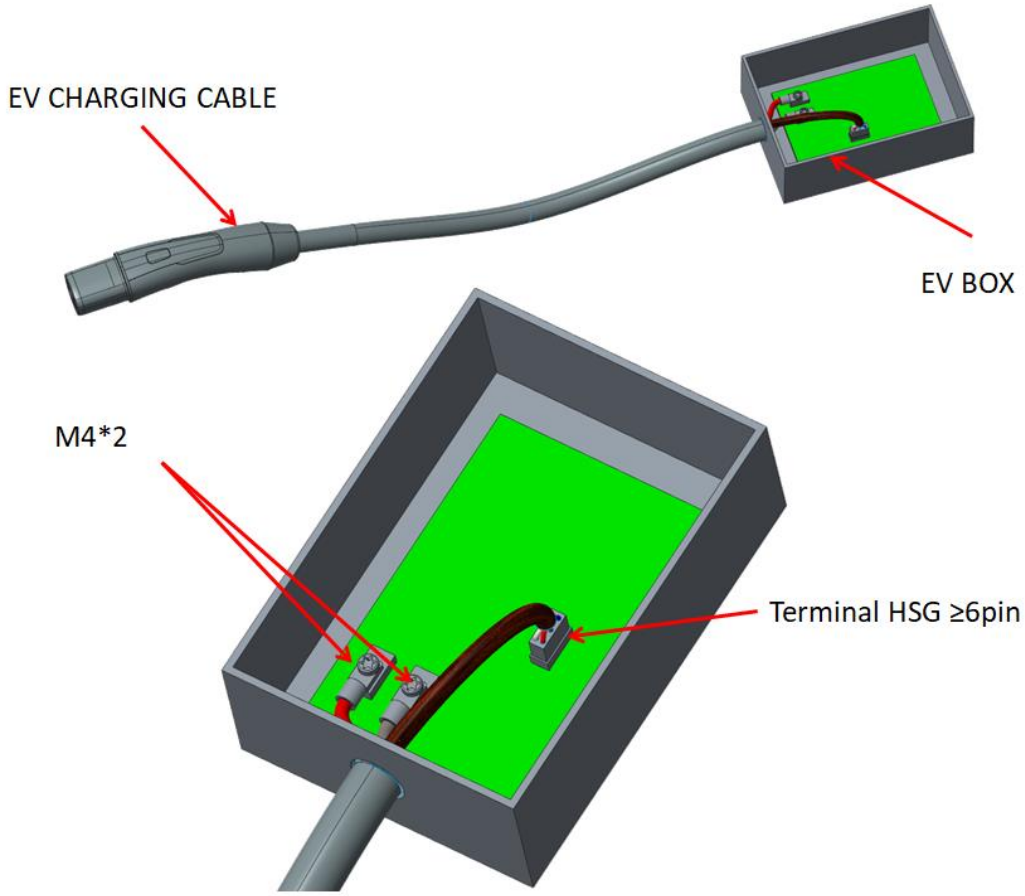

TWISTED PAIRS
(BLK & WHT)
(RED & BRN)

CSM CONNECTOR 12-002531-01 TERMINAL 12-002529-01				
Cavity	Circuit	Color	Type	To
2	PP	BLUE	18 AWG	NACS PP
5	T1+	BLK	18 AWG	PT1000
3	T1-/T2-	WHT	18 AWG	PT COMMON
17	T2+	RED	18 AWG	PT1000
11	CP	YEL	18 AWG	NACS CP
12	GND	GRN	18 AWG	SPLICE
9	5V VCC	BRN	18 AWG	PCBA

Jiangyin SINBON Electronics Co., Ltd.
288 Chengjiang Middle Rd.,
Jiangyin, Jiangsu, China
Tel: +86-510-86404098
Fax: +86-510-86404940

Service Terms

Whole Solution

SINBON could provide customers and cooperative partners with a whole solution of technical support, training, maintenance service, etc.

One-stop Service

SINBON could provide customers and cooperative partners with one-stop service. All charging related products purchased from SINBON are offered professional and guaranteed service for any problem caused due to product usage and quality.

Warranty

Two years from shipment / Accumulation 10000 charging cycles after initial use.

During the warranty period, products must be carried out on-site technical service due to product faults or quality defects (caused by abnormal or improper usage is not included), SINBON will promptly dispatch technical engineer to solve product malfunction for free.

Jiangyin SINBON Electronics Co., Ltd.
288 Chengjiang Middle Rd.,
Jiangyin, Jiangsu, China
Tel: +86-510-86404098
Fax: +86-510-86404940

FCC Statement
Any Changes or modifications not expressly approved by the party responsible for compliance could void the user's authority to operate the equipment.
This device complies with part 15 of the FCC Rules. Operation is subject to the following two conditions:
(1) This device may not cause harmful interference, and
(2) This device must accept any interference received, including interference that may cause undesired operation.

ISED RSS Warning:
This device complies with Innovation, Science and Economic Development Canada licence-exempt RSS standard(s). Operation is subject to the following two conditions: (1) this device may not cause interference, and (2) this device must accept any interference, including interference that may cause undesired operation of the device.
Le présent appareil est conforme aux CNR d'ISED applicables aux appareils radio exempts de licence. L'exploitation est autorisée aux deux conditions suivantes:

(1) l'appareil ne doit pas produire de brouillage, et
(2) l'utilisateur de l'appareil doit accepter tout brouillage radioélectrique subi, même si le brouillage est susceptible d'en compromettre le fonctionnement.

Note : This equipment has been tested and found to comply with the limits for a Class B digital device, pursuant to part 15 of the FCC Rules. These limits are designed to provide reasonable protection against harmful interference in a residential installation. This equipment generates,uses and can radiate radio frequency energy and, if not installed and used in accordance with the instructions, may cause harmful interference to radio communications. However, there is no guarantee that interference will not occur in a particular installation. If this equipment does cause harmful interference to radio or television reception, which can be determined by turning the equipment off and on, the user is encouraged to try to correct the interference by one or more of the following measures:
—Reorient or relocate the receiving antenna.
—Increase the separation between the equipment and receiver.
—Connect the equipment into an outlet on a circuit different from that to which the receiver is connected.
—Consult the dealer or an experienced radio/TV technician for help.

FCC Radiation Exposure Statement:
This equipment complies with FCC radiation exposure limits set forth for an uncontrolled environment .This device has been assessed to be in compliance with SAR and/or RF field strength limits. The device can be used in the exposure condition without restriction.

ISED RF exposure statement:
This equipment complies with ISED radiation exposure limits set forth for used on the car. The device has been evaluated to meet general RF exposure requirement.

Le matériel est conforme aux limites de dose d'exposition aux rayonnements énoncés pour fac un autre environnement.ce dispositif a été évalué à satisfaire l'exigence générale de l'exposition aux rf.

On a évalué que ce dispositif était conforme aux limites d'intensité du das et/ou du champ RF. L'appareil peut être utilisé dans les conditions d'exposition sans restriction.