2.1.11 POD-H-STM-8x4

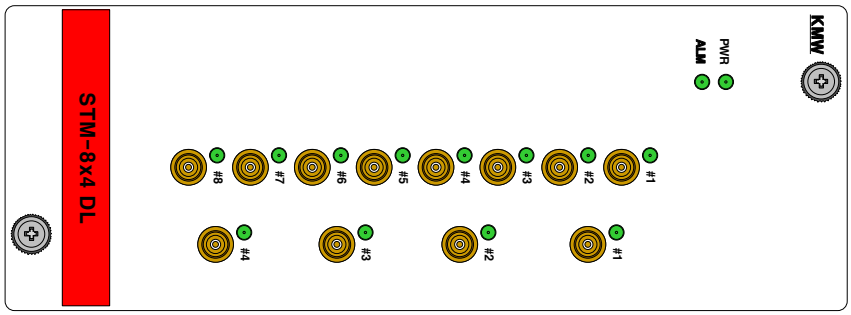

Figure 2-41 POD-H-STM-8x4-DL

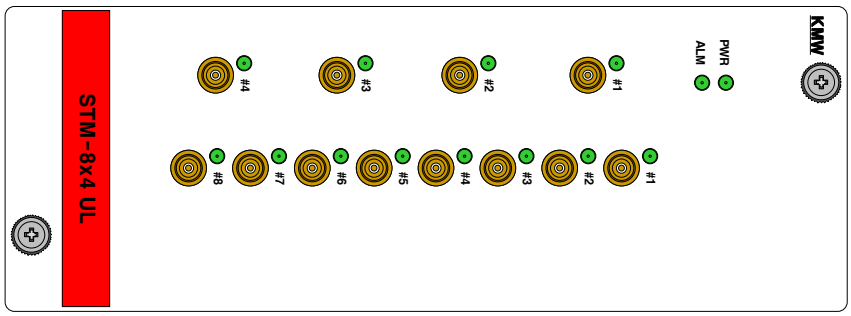

Figure 2-42 POD-H-STM-8x4-UL

2.1.11.1 Functions and features

- Programmable sectorization can be supported by using H-STM-8x4.
- Based on programmed sector definition, DL output signals received from H-FEM are combined by each sector and transferred to H-DTM, or H-HOM.
- Based on programmed sector definition, received UL signals from H-DTM, or H-HOM are distributed and transferred to H-FEM.
- For each sector, controls Power Ratio for multiple H-FEM with same frequency band to share DL output power at Remote Unit
- ALC function for DL/UL Path
- To minimize negative effects by unused input/output ports such as the degradation of VSWR or isolation between ports, the unused ports can be switched into 50 ohm termination by user.
- When any one sector consists of remote unit less than 4, H-STM-8x4 can be connected to H-HOM-L directly without H-DTM.
  - > In this case, the attenuator in the common path of H-STM-8x8 should add 15dB attenuation using web based GUI to compensate the loss of H-DTM.

2.1.11.2 Specifications

- Frequency range: 600~2700MHz
- Maximum RF Power: -10dBm@DL, 25dBm@UL
- Size, weight, and power consumption : refer to Table 2-1

2.1.11.3 RF port and LED

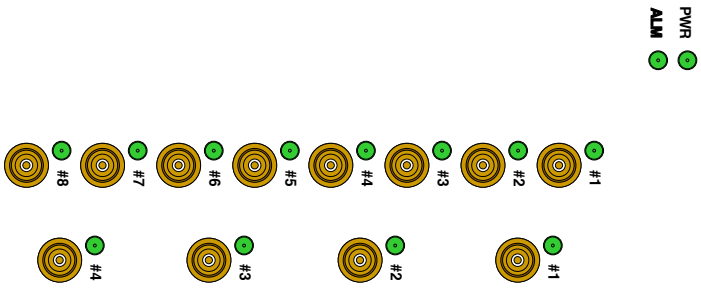

Figure 2-43 POD-H-STM-8x4-DL RF port and LED

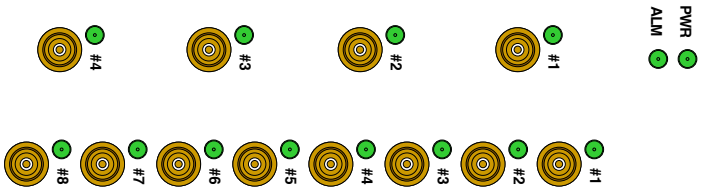

Figure 2-44 POD-H-STM-8x4-UL RF port and LED

- RF port
  - POD-H-STM-8x4-DL
    - > DL IN #1 ~ #8
      - Receives downlink signal from up to 8 H-FEM
      - Connected to DL output port of H-FEM
      - Connector Type: SMB-L Female
    - > DL OUT #1 ~ #4
      - Combines inputted downlink signals and outputs to H-DTM or H-HOM by each sector
      - Connected to DL input port of H-DTM, or H-HOM for each sector
      - Connector Type: SMB-L Female
  - POD-H-STM-8x4-UL
    - > UL IN #1 ~ #8
      - Receives uplink signals from H-DTM, or H-HOM for each sector
      - Connected to UL output port of H-DTM, or H-HOM for each sector
      - Connector Type: SMB-L Female
    - > UL OUT #1 ~ #4
      - Distributes uplink signals inputted from UL IN #1~#8 port by each sector and outputs to H-FEM
      - Connected to UL input port of H-FEM
      - Connector Type: SMB-L Female

- LED

Table 2-25 POD-H-STM-8x4 LED Operation

		Specifications
PWR	Solid Green	When power is on.
	Off	When power is off.
ALM	Off	When POD-H-STM-8x4-DL (UL) has no alarms.
	Solid Yellow	When POD-H-STM-8x4-DL (UL) has minor alarm.
	Solid Red	When POD-H-STM-8x4-DL (UL) has major alarm.
DL IN #1 ~ #8	Blink Green	At the cable connection guide, green led blinks to indicate which RF ports should be connected to.
DL OUT #1 ~ #4	Blink Green	
UL IN #1 ~ #8	Blink Green	
UL OUT #1 ~ #4	Blink Green	

2.1.11.4 Communication port

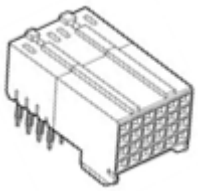

Figure 2-45 Communication Port

- This port provides communication path between H-STM and H-SCM through backboard of H-SRU.
- +24V DC is provided through this communication port from backboard of H-SRU.
- H-STM acquires ID information such as Rack ID, Sub rack ID and Slot ID through this communication port. The IP address of H-STM is assigned automatically using the acquired ID information.

2.1.11.5 Alarms

Table 2-26 POD-H-STM-8x8 - Alarms

Alarm Name	Description	Remedy	Alarm Severity	LED color
High Temperature	Temperature too high	Check environment	Major	Red
	Temperature high		Minor	Yellow
Low Temperature	Temperature too low		Minor	Yellow
Link	Communication fail	Check pin of communication port/ assigned IP address	Major	Yellow
Downlink ALC Activation	ALC activation	Check H-STM downlink input level/ attenuator configuration	Warning	Yellow

2.1.12 POD-H-PSU-x

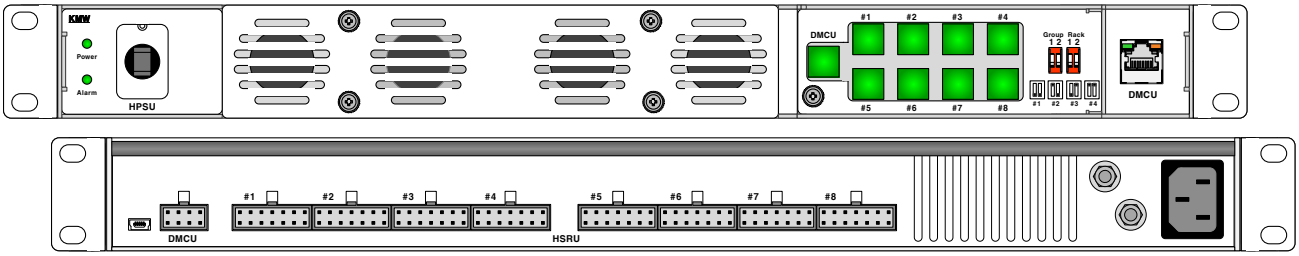

Figure 2-46 POD-H-PSU-x

2.1.12.1 Functions and features

- Distributes +24Vdc to DMCU and up to 8 H-SRUs
- Turn on or off each DC output individually in a local or remote site
- Set Rack ID

2.1.12.2 Specifications

- AC input Range: AC 100~240V (47~63Hz)
- Size, weight, and power consumption : refer to Table 2-1

2.1.12.3 LED

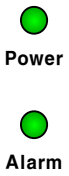

Figure 2-47 POD-H-PSU-x LED

Table 2-27 POD-H-PSU-x LED Operation

		Specifications
PWR	Solid Green	When power is on.
	Off	When power is off.
ALM	Off	When POD-H-PSU-x has no alarms.
	Solid Yellow	When POD-H-PSU-x has minor alarm.
	Solid Red	When POD-H-PSU-x has major alarm.

2.1.12.4 Ethernet Port

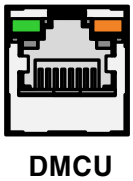

Figure 2-48 Ethernet Port

- DMCU port
  - Connected to H-DMCU so that H-DMCU can monitor and control H-PSU

2.1.12.5 AC input on/off Switch & DC output on/off switch

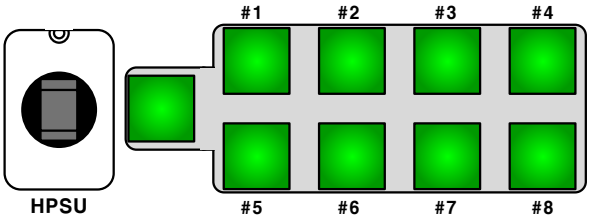

Figure 2-49 AC input on/off Switch & DC output on/off switch

- AC input on/off switch
  - Be able to turn AC input on (off) manually by using AC input on/off switch
- DC output on/off switch
  - Be able to turn each DC output on (off) separately
  - Toggle type
    > When you press DC output on/off switch, the LED light of DC output on/off switch and 24V DC output turn on, and when you press it again, LED light and 24V DC output turn off.
  - DC output on/off switch can be turned on (off) in local and remote site

2.1.12.6 AC input port & DC output port

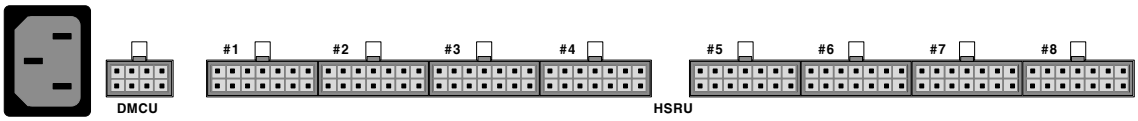

Figure 2-50 AC input port & DC output port

- AC input port
  - Use 3 wire AC code (Line, Neutral, GND)
- DC output port
  - One DC output port for H-DMCU
    > DC output connector contains +24V DC, Rack ID, and insert pin.
  - Eight DC output port for H-SRU
    > Each DC output connector contains +24V DC, Rack ID, and insert pin.

2.1.12.7 Rack ID

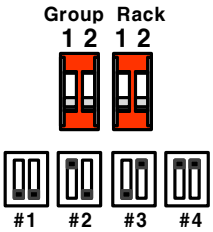

Figure 2-51 Rack ID

- Group is not used
- Rack ID
  - Rack ID can be set from 1 to 4.
  - One H-DMCU can support up to 4 racks, and one H-DMCU needs maximum 4 H-PSU because one H-PSU can supply 24V DC power to **only one rack** that can be composed of up to 8 H-SRUs and one DMCU.
  - H-DMCU and each H-SCM in H-SRU can identify its own rack ID through the cable connection with H-PSU.

- CAUTION) **The rack ID connected to H-DMCU must be set as 1.**

Table 2-28 Rack ID

DIP Switch Setting	Group 1	Group 2	Rack 1	Rack 2
Rack ID #1	X	X	OFF	OFF
Rack ID #2	X	X	ON	OFF
Rack ID #3	X	X	OFF	ON
Rack ID #4	X	X	ON	ON

2.1.12.8 Ground port

- Refer to section 3.2.2

2.1.12.9 Alarms

Table 2-29 POD-H-PSU - Alarms

Alarm Name	Description	Remedy	Alarm Severity	LED color
High Temperature	Temperature too high	Check environment	Major	Red
	Temperature high		Minor	Yellow
Low Temperature	Temperature too low		Minor	Yellow
Voltage	High Voltage	Check if High voltage alarm occurs again after reset.	Major	Red
Current	High Current	Check if current alarm occurs again after reset.	Major	Red
Low Voltage	Low Voltage	Check if low voltage alarm occurs again after reset.	Major	Yellow

© KMW USA Inc.
1818 E. Orangethrope Ave, Fullerton, CA 92831
Tel. +1 (714) 515-1100
www.kmwcomm.com

2.1.13 POD-H-CDU

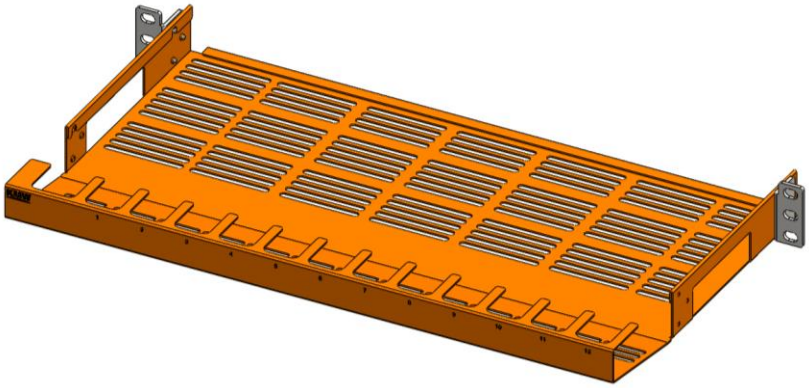

Figure 2-52 POD-H-CDU

2.1.13.1 Functions and features

- Provides cable routing space when RF, optic, DC power, and Ethernet cables are connected between the modules or units in POD DAS system.
- Has good space efficiency since H-FAU can be installed behind H-CDU

2.1.14 POD-H-FAU

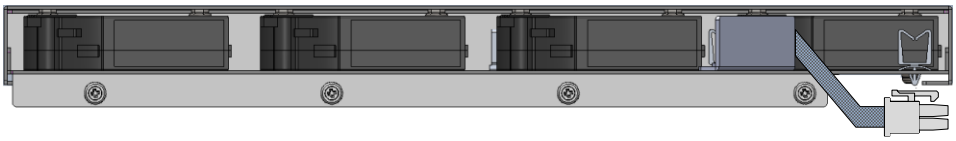

Figure 2-53 POD-H-FAU

2.1.14.1 Functions and features

- Installed right above the H-SRU for dissipating heat comes from the modules installed in POD-H-SRU.
- Good space efficiency since H-FAU can be installed behind H-CDU
- DC Power is provided from FAN port located in the back side of H-SRU
- FAN speed control and FAN on/off is controlled automatically by H-SCM based on the temperature of modules installed in H-SRU.
- FAN fail alarm is monitored by H-SCM.

2.1.14.2 The rules for installing FAN unit

- When the number of module installed in a POD-H-SRU is less than 5, it doesn't need the installation of H-FAU.
- When the number of module installed in a POD-H-SRU is more than 6, It needs the installation of POD-H-FAU.
  - > We strongly recommend that each module should be installed every other slot in a POD-H-SRU.
- When POD-H-SRUs more than 2 are stacked in one rack, one POD-H-FAU per 2 POD-H-SRU should be installed regardless of the number of module installed in one POD-H-SRU.
  - > We strongly recommend that each module should be installed with sufficient gap as far as possible when the modules in a POD-H-SRU are not fully installed.

2.1.14.3 Port

- H-FAU must be connected with FAN port which is located in the back of H-SRU (refer to Figure 2-9) by provided signal cable.

- Control signal for FAN speed control, DC power and FAN alarm signal are transferred between H-FAU and H-SCM through this signal cable.

2.1.14.4 Alarms

Table 2-30 POD-H-FAU - Alarms

Alarm Name	Description	Remedy	Alarm Severity	LED color
FAN	FAN fail	Replace FAN	Minor	Yellow

2.2 Remote Unit

RU (Remote Unit) provides wireless service coverage to users by transmitting downlink signal through the service antenna.

- Remote units which is supported by KMW are as below.
  - 7/5/3 band RU for commercial band service (POD-R-7S8CPAWB-2730-AC/DC)
  - PS700/800 RU for public safety band service (POD-R-P78-27-AC/DC)
  - High power RU with 20/40W output power (POD-R-4346-AC/DC)

2.2.1 7/5/3 band RU for commercial band service (POD-R-7S8CPAWB-2730-AC/DC)

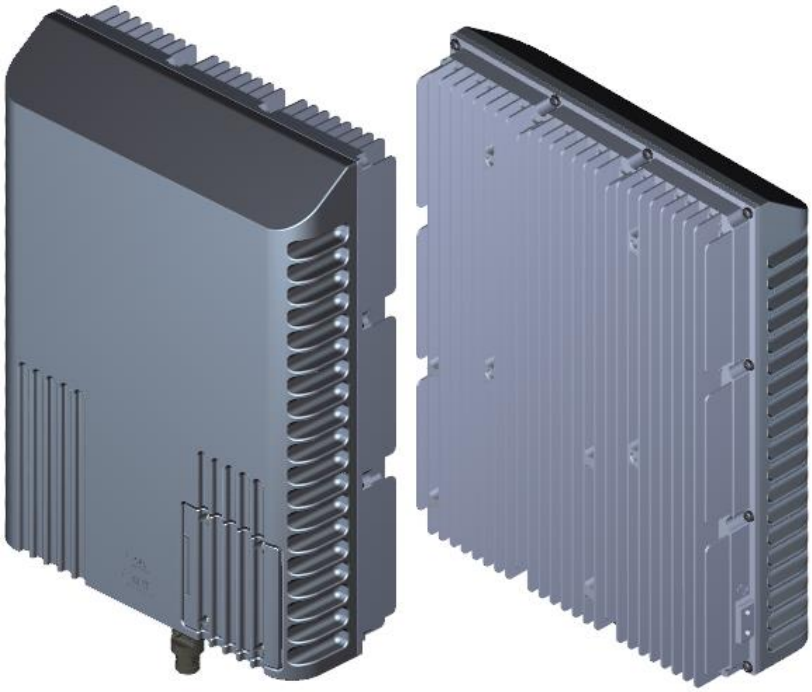

Figure 2-54 Remote Unit – 7/5/3 band

2.2.1.1 Functions and features

- Supported frequency band
  - > 3_band RU: SMR800, PCS, and 2.6G TDD
  - > 5_band RU: 700M, 850M, PCS, AWS, and WCS
  - > 7_band RU: 700M, SMR800+850M, PCS, AWS, WCS, and 2.6G TDD
- VSWR measurement function for checking VSWR of the connected service antenna
- Built-in Test tone generator in order to check uplink path verification
- Increase scalability by supporting expansion RU
  - > Expansion RU is connected with main RU through AUX DL/UL port by using RF cable
  - > Expansion RU can be added, when it needs additional frequency band other than frequency bands being used in main RU, or additional filter attenuation in the frequency band being used in main RU. In the latter case, the frequency band which needs additional filter attenuation must be off in main RU and replaced by the frequency band with strengthened filter attenuation in expansion RU.

2.2.1.2 Specifications

- Common Specifications
  - Operating Temperature: -40~55°C

- Input Power
  - > AC type: 110V, 50-60 Hz
  - > DC Type: -48V
- IP rating: IP65
- Cooling method: convection cooling
- Dimension: (WxHxD) 13 x 17.3 x 4.7 in (330 x 440 x 120mm)
- Weight: 37.5 lbs (17kg)
-

- 700M, SMR800 + 850M

Table 2-31 3/5/7 band RU - 700M, SMR800 + 850M Specifications

		700M		SMR800+850M
		Lower ABC	Upper C	
Frequency Band	Downlink	728.0M - 746.0M	746.0M - 756.0M	862.0M - 894.0M
	Uplink	698.0M - 716.0M	777.0M - 787.0M	817.0M - 849.0M
Bandwidth		18.0 MHz	10.0 MHz	32 MHz
Mean Gain	Downlink	36 ± 1.0 dB		36 ± 1.0 dB
	Uplink	37 ± 1.0 dB	37±1.0 dB	37 ± 1.0 dB
Maximum Gain	Downlink	42 dB		
	Uplink	37 dB		
Ripple(p-p)	Downlink	2.5 dB		2.0 dB
	Uplink	2.5 dB	4.0 dB @Full band 2.5dB@ 777~786M	2.0 dB
Maximum downlink output power		27 dBm		27 dBm
Uplink Noise Figure @center freq.		4.00 dB	4.00 dB	4.00 dB
VSWR		< 1:1.7		
Delay		< 5.00 us		
EVM		< 5.0 % @E-TM 3.1		
Operating band unwanted emissions		Meet FCC, 3GPP WCDMA/LTE Repeater Spec., 3GPP2 CDMA spec.		
Out of band emission		Meet FCC, 3GPP WCDMA/LTE Repeater Spec., 3GPP2 CDMA spec.		

- PCS, AWS

Table 2-32 3/5/7 band RU – PCS, AWS Specifications

		PCS	AWS
Frequency Band	Downlink	1930.0M - 1995.0M	2110.0M - 2180.0M
	Uplink	1850.0M-1915.0M	1710.0M-1780.0M (1710~1755 M for BDA application)
Bandwidth		65.0 MHz	70.0 MHz
Mean Gain	Downlink	39 ± 1.0 dB	39 ± 1.0 dB
	Uplink	40 ± 1.0 dB	40 ± 1.0 dB
Maximum Gain	Downlink	45 dB	
	Uplink	40 dB	
Ripple(p-p)	Downlink	3.5 dB@ Full band 2.5dB (excluding band edge)	2.0 dB
	Uplink	3.5 dB 2.5dB (excluding band edge)	2.0 dB
Maximum downlink output power		30 dBm	30 dBm

	PCS	AWS
Uplink Noise Figure @center freq.	4.00 dB	4.00 dB
VSWR	< 1:1.7	
Delay	< 5.00 us	
EVM	< 5.0 % @E-TM 3.1	
Operating band unwanted emissions	Meet FCC, 3GPP WCDMA/LTE Repeater Spec., 3GPP2 CDMA spec.	
Out of band emission	Meet FCC, 3GPP WCDMA/LTE Repeater Spec., 3GPP2 CDMA spec.	

- WCS, 2.65G

Table 2-33 3/5/7 band RU – WCS, 2.6G Specifications

		WCS	2.6G
Frequency Band	Downlink	2350.0M - 2360.0M	2496.0M - 2690.0M
	Uplink	2305.0M-2315.0M	2496.0M-2690.0M
Bandwidth		10.0 MHz	194.0 MHz
Mean Gain	Downlink	39 ± 1.0 dB	39 ± 1.0 dB
	Uplink	40 ± 1.0 dB	40 ± 1.0 dB
Maximum Gain	Downlink	45 dB	
	Uplink	40 dB	
Ripple(p-p)	Downlink	2.5 dB	3.5 dB
	Uplink	1.75 dB	3.5 dB
Maximum downlink output power		30 dBm	30 dBm
Uplink Noise Figure @center freq.		5.00 dB	4.00 dB
VSWR		< 1:1.7	
Delay		< 5.00 us	< 2.00 us
EVM		< 5.0 % @E-TM 3.1	
Operating band unwanted emissions		Meet FCC, 3GPP WCDMA/LTE Repeater Spec.	
Out of band emission		Meet FCC, 3GPP WCDMA/LTE Repeater Spec.	

© KMW USA Inc.
1818 E. Orangethrope Ave, Fullerton, CA 92831
Tel. +1 (714) 515-1100
www.kmwcomm.com

2.2.1.3 RF ports and LED

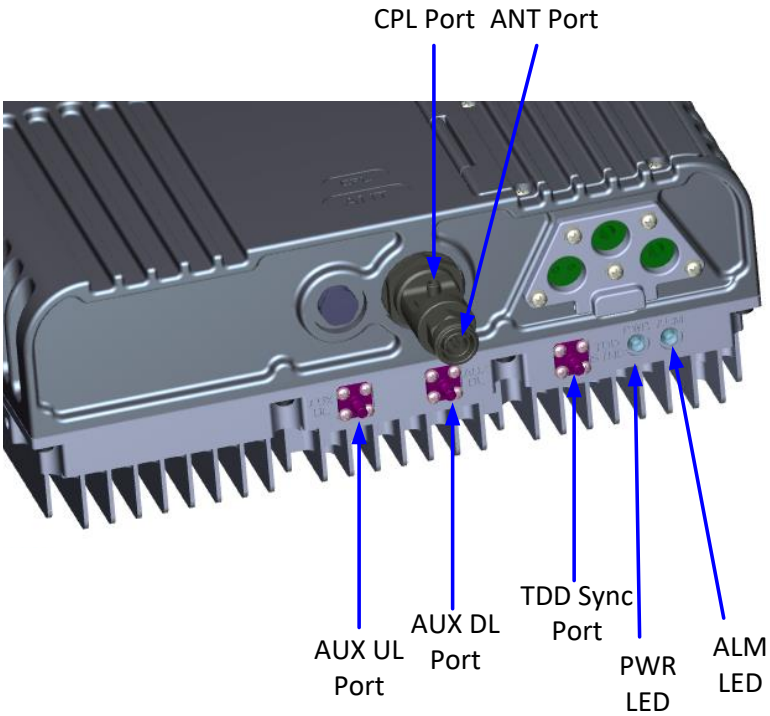

Figure 2-55 Remote Unit External Interfaces

- RF port
  - ANT port
    - > Connected to Service antenna
    - > Mini DIN, female type
  - CPL port
    - > Can be connected to spectrum analyzer to monitor downlink spectrum without interrupting wireless service
    - > SMA female type
  - AUX UL & DL
    - > Connected to expansion remote unit
    - > QMA female type
  - TDD sync port
    - > Provides TDD sync signal which can be used to synchronize with TDD signal measuring equipment such as spectrum analyzer.
    - > QMA female type
- LED

Table 2-34 7/5/3 band RU LED Operation

		Specifications
PWR	Solid Green	When power is on.
	Off	When power is off.
ALM	Off	When 7/5/3 band RU has no alarms.
	Solid Yellow	When 7/5/3 band RU has minor alarm.
	Solid Red	When 7/5/3 band RU has major alarm.

2.2.1.4 Debug Window

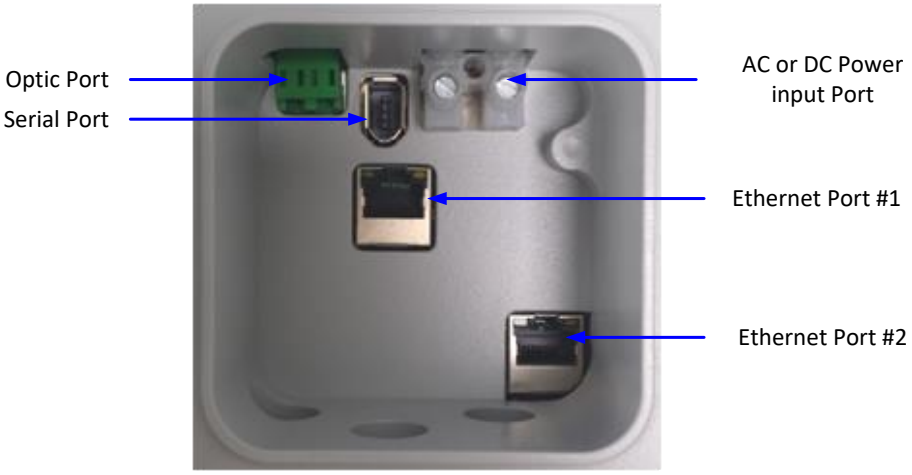

Figure 2-56 Debug Window

User can know the name for each port of RU by attached sticker on the cover of debug window when user opens debug window. User can verify whether RU is AC or DC type, and RU is main RU or expansion RU.

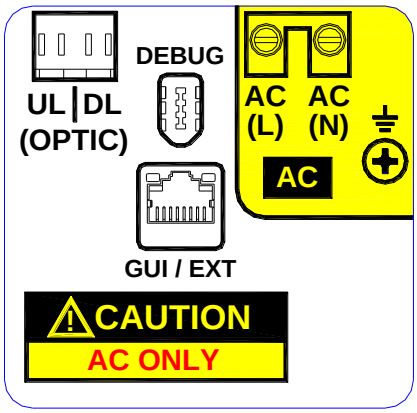

Main RU - AC type

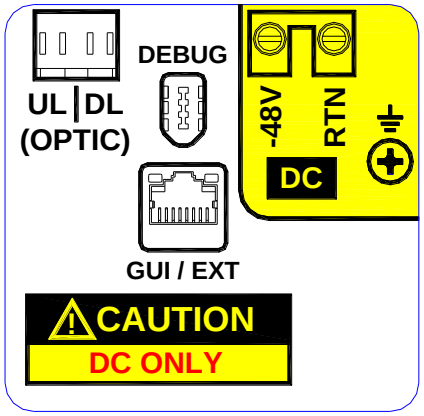

Main RU - DC type

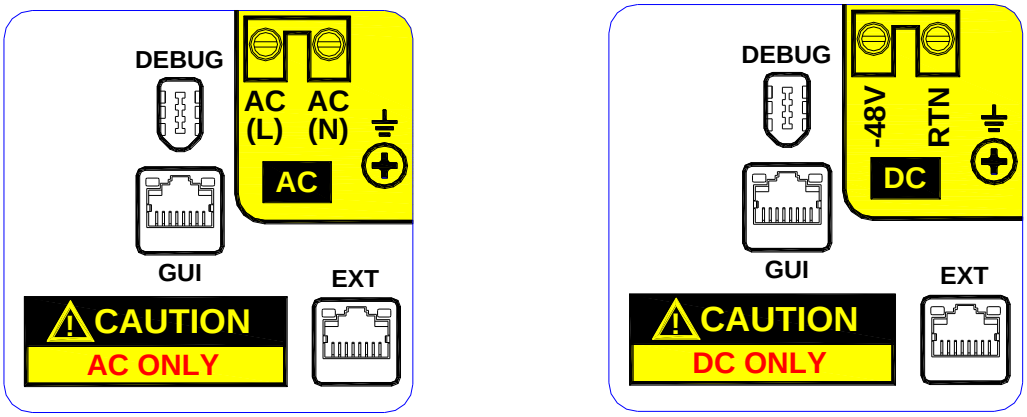

Expansion RU - AC type **Expansion RU - DC type**

Figure 2-57 Port name for each RU type

- Optic port
  - Connected to Head-end
  - Expansion RU doesn't need optic port because it is connected to main RU through RF cable.
  - LC/APC Female type
  - Wavelength: 1310nm for downlink, 1550nm for uplink
- Serial port (DEBUG): Used for internal debug
- AC or DC power input port
  - AC or DC power source is provided into Remote unit through this port.
    - > 110V AC, 50~60Hz or DC -48V

CAUTION

Make sure whether remote unit is AC or DC type before connecting input power to AC or DC input port

Because AC and DC input port uses same connector, user might be confused, so that the wrong connection of input power might cause severe damage of remote unit.

User can check easily whether remote unit is AC or DC type by checking the picture of sticker attached to the debug window cover when you open it. (refer to Figure 2-57)

- Ethernet Port
  - Ethernet Port #1
    - > Used as GUI Port to access web-based GUI when expansion RU is not connected
    - > Used for connecting to expansion RU when expansion RU is connected to main RU.
    - > Use GUI port in expansion RU to access web-based GUI when expansion RU is connected
  - Ethernet Port #2
    - > Used as GUI Port to access web-based GUI for only expansion RU

2.2.1.5 Alarms

Table 2-35 3/5/7 band RU – Alarms

Alarm Name	Description	Remedy	Alarm Severity	LED color
High Temperature	Temperature too high	Check environment	Major	Red
	Temperature high		Minor	Yellow
Low Temperature	Temperature too low		Minor	Yellow
Downlink High Output Power	RF signal too high	Check Head-end downlink input level/ attenuator configuration/ALC status	Major	Red
	RF signal high		Major	Yellow
Uplink High Input Power	RF signal too high	Check RU uplink input level/ attenuator configuration/ ALC status	Major	Red
	RF signal high		Major	Yellow
Downlink Low Output Power	RF signal too low	Check Head-end downlink input level/ attenuator configuration/ RF cabling	Minor	Yellow
Link	Communication fail	Check cable connection	Major	Yellow
Freeze	The final stage of Shutdown process	Check if shutdown process is going again after reset	Major	Red
Downlink ALC Activation	ALC activation	Check Head-end downlink input level/ attenuator configuration	Warning	Yellow
Uplink PLL Unlock	Uplink PLL unlock	Check if uplink PLL is still in unlocked status after resetting PLL frequency	Minor	Yellow
VSWR	Bad RF cable/mismatched service antenna	Check cable between RU and service antenna, VSWR of service antenna	Major	Yellow
Optic LD Fail	Uplink LD fail	Check if optic LD fail alarm occurs again after reset.	Major	Yellow
Optic PD Fail	Downlink PD fail	Check optic cable connection with H-HOM	Major	Yellow
Optic Loss	Excess permitted optic loss	Check optic cable connection with H-HOM / clean Optic connector and port	Minor	Yellow
High current	Power supply load too high	Check if current alarm occurs again after reset.	Major	Red
Sync fail	No TDD sync signal is acquired	Check optic cable connection with H-HOM and 2.6G downlink input signal	Major	Yellow

2.2.1.6 Grounding

- Refer to section 3.3.2

2.2.2 PS700/800 RU for public safety 700/800 frequency band service (POD-R-P78-27-AC/DC)

Figure 2-58 Remote Unit – PS700/800

2.2.2.1 Functions and features

- Supported frequency band: Public Safety 700M & 800M
- VSWR measurement function for checking VSWR of the connected service antenna
- Built-in Test tone generator in order to check uplink path verification
- Increase scalability by supporting expansion RU
  - > Connected between expansion RU and main RU through AUX DL/UL port by using RF cable
  - > Expansion RU can be added, when it needs additional frequency band other than frequency bands being used in main RU, or additional filter attenuation in the frequency band being used in main RU. In the latter case, the frequency band which needs additional filter attenuation must be off in main RU and replaced by the frequency band with strengthened filter attenuation in expansion RU.

2.2.2.2 Specifications

- Operating Temperature: -40~55°C
- Input Power
  - > AC type: 110V, 50-60 Hz
  - > DC Type: -48V
- Power Consumption: <55W
- IP rating: IP65
- Cooling method: convection cooling
- Dimension: (WxHxD) 13 x 12.2 x 3.9 in (330 x 310 x 100mm)
- Weight: 22.5 lbs (10.2kg)

© KMW USA Inc.

Table 2-36 PS700/800 RU - Specifications

		PS700	PS800
Frequency Band	Downlink	758.0M - 775.0M	851M - 869M
	Uplink	788.0M - 805.0M	806.0M - 824.0M
Bandwidth		17.0 MHz	18.0 MHz
Mean Gain	Downlink	36 ± 1.0 dB	36 ± 1.0 dB
	Uplink	37 ± 1.0 dB	37 ± 1.0 dB
Maximum Gain	Downlink	67 dB	
	Uplink	37 dB	
Ripple(p-p)	Downlink	3.5 dB @Full band 2.0 dB @759~774M	3.5 dB @Full band 2.0 dB @852~869M
	Uplink	5.3 dB @Full band 2.0 dB @789~804M	5.3 dB @Full band 2.0 dB @807~824M
Maximum downlink output power		27 dBm	27 dBm
Uplink Noise Figure @center freq.		4.00 dB	4.00 dB
VSWR		< 1:1.7	
Delay		< 5.00 us	
EVM		< 5.0 % @E-TM 3.1	
Operating band unwanted emissions		Meet FCC, LTE Repeater Spec.	
Out of band emission		Meet FCC, LTE Repeater Spec.	

2.2.2.3 RF ports and LED

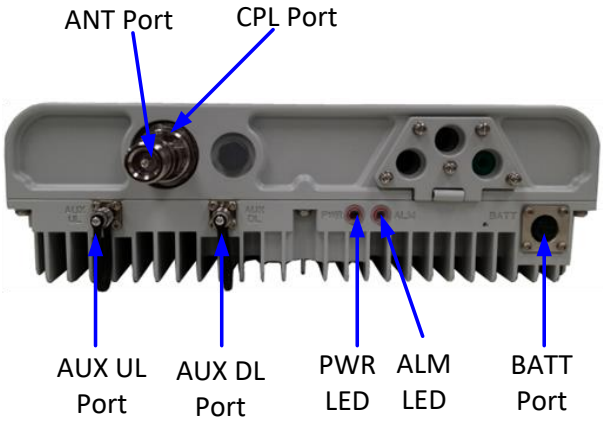

Figure 2-59 Remote Unit - PS700/800 External Interfaces

- RF port
  - ANT port
    - > Connected to Service antenna
    - > Mini DIN, female type
  - CPL port
    - > Can be connected to spectrum analyzer to monitor downlink spectrum without interrupting wireless service
    - > SMA female type
  - AUX UL & DL
    - > Connected to expansion remote unit
    - > QMA female type

- TDD sync port
  - > Provides TDD sync signal which can be used to synchronize with TDD signal measuring equipment such as spectrum analyzer.
  - > QMA female type

- LED

Table 2-37 7/5/3 band RU LED Operation

		Specifications
PWR	Solid Green	When power is on.
	Off	When power is off.
ALM	Off	When PS700/800 band RU has no alarms.
	Solid Yellow	When PS700/800 band RU has minor alarm.
	Solid Red	When PS700/800 band RU has major alarm.

2.2.2.4 Debug Window

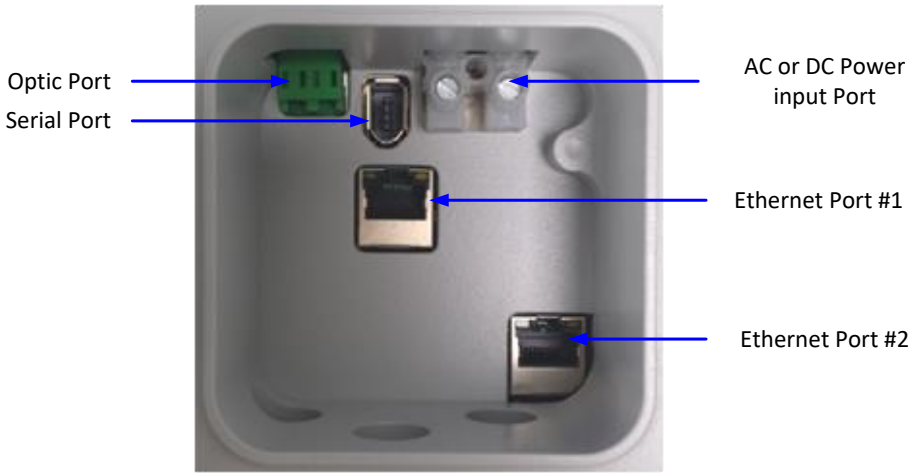

Figure 2-60 Debug Window

User can know the name for each port of RU by the sticker attached on the cover of debug window when user opens debug window. User can verify whether RU is AC or DC type, and RU is main RU or expansion RU.

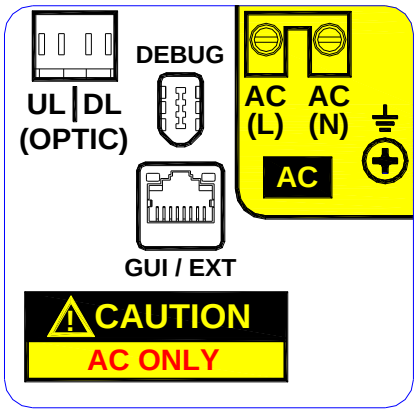

Main RU - AC type

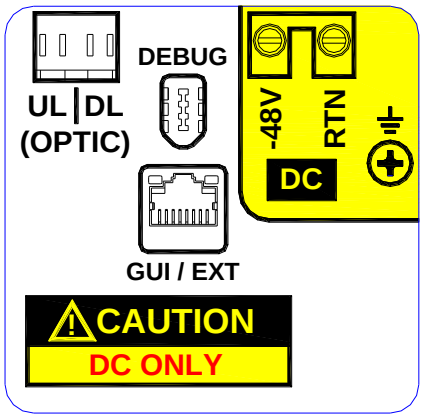

Main RU - DC type

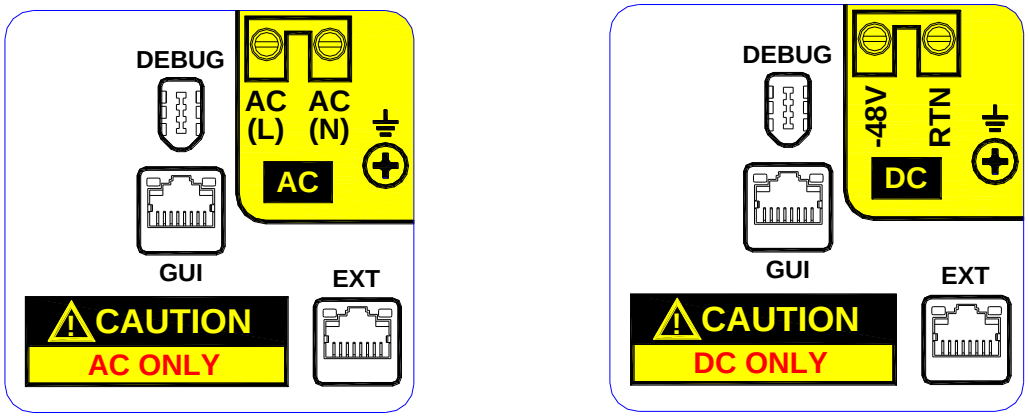

Expansion RU - AC type **Expansion RU - DC type**

Figure 2-61 Port name for each RU type

- Optic port
  - Connected to Head-end
  - Expansion RU doesn't need optic port because it is connected to main RU through RF cable.
  - LC/APC Female type
  - Wavelength: 1310nm for downlink, 1550nm for uplink
- Serial port (DEBUG): Used for internal debug
- AC or DC power input port
  - AC or DC power source is provided into Remote unit through this port.
    - > 110V AC, 50~60Hz or DC -48V

CAUTION

Must verify whether remote unit is AC or DC type before connecting input power to AC or DC input port because AC and DC power input port has same form factor.

It might cause severe damage of remote unit when user connects AC input to DC power input port of DC type RU or DC input to AC power input port of AC type RU in the wrong way.

User can verify easily whether remote unit is AC or DC type by checking the picture of sticker attached to the debug window cover when you open it. (refer to Figure 2-61)

- Ethernet Port
  - Ethernet Port #1
    - > Used as GUI Port to access web-based GUI when expansion RU is not connected
    - > Used for connecting to expansion RU when expansion RU is connected to main RU.
    - > Use GUI port in expansion RU to access web-based GUI when expansion RU is connected
  - Ethernet Port #2
    - > Used as GUI Port to access web-based GUI for only expansion RU

2.2.2.5 Battery Backup Port

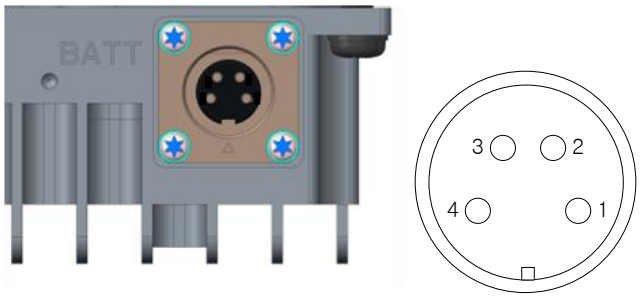

Figure 2-62 Battery backup port

- Connected to rechargeable battery

Table 2-38 Pin map - Battery Backup Port

Pin Assign		Specifications
1	DC	26V
2	DC	26V
3	GND	GND
4	GND	GND

2.2.2.6 Alarms

Table 2-39 PS700/800 band RU – Alarms

Alarm Name	Description	Remedy	Alarm Severity	LED color
High Temperature	Temperature too high	Check environment	Major	Red
	Temperature high		Minor	Yellow
Low Temperature	Temperature too low		Minor	Yellow
Downlink High Output Power	RF signal too high	Check Head-end downlink input level/ attenuator configuration/ ALC status	Major	Red
	RF signal high		Major	Yellow
Uplink High Input Power	RF signal too high	Check RU uplink input level/ attenuator configuration/ ALC status	Major	Red
	RF signal high		Major	Yellow
Downlink Low Output Power	RF signal too low	Check Head-end downlink input level/ attenuator configuration/ RF cabling	Minor	Yellow
Link	Communication fail	Check cable connection	Major	Yellow
Freeze	The final stage of Shutdown process	Check if shutdown process is going again after reset	Major	Red
Downlink ALC Activation	ALC activation	Check Head-end downlink input level/ attenuator configuration	Warning	Yellow
Uplink PLL Unlock	Uplink PLL unlock	Check if uplink PLL is still in unlocked status after resetting PLL frequency	Minor	Yellow
VSWR	Bad RF cable/mismatched service antenna	Check cable between RU and service antenna, VSWR of service antenna	Major	Yellow
Optic LD Fail	Uplink LD fail	Check if optic LD fail alarm occurs again after reset.	Major	Yellow

Optic PD Fail	Downlink PD fail	Check optic cable connection with H-HOM	Major	Yellow
Optic Loss	Excess permitted optic loss	Check optic cable connection with H-HOM / clean Optic connector and port	Minor	Yellow
High current	Power supply load too high	Check if current alarm occurs again after reset.	Critical	Red

2.2.2.7 Grounding

- Refer to section 3.3.2

3. EQUIPMENT INSTALLATION

3.1 Inspection before equipment installation

Please follow these procedures before installing KMW POD equipments:

- Verify the number of packages received against the packing list.
- Check all packages for external damage; report any external damage to the shipping carrier.
- Open and check each package against the packing list. If any items are missing, contact KMW customer service.

3.1.1 The Part list for each unit

3.1.1.1 Head-end Unit

3.1.1.1.1 POD-H-DMCU

	Q'ty	Length	Comments
H-DMCU	1		
H-CDU	1		Cable Duct Unit
Quick Installation Guide	1		
Rack mount bracket	1		
Power & signal cable between H-DMCU and H-PSU	1	30cm	Refer to section 4.1.1
Ethernet Cable for Web GUI or modem connection	1	2m	
GND Cable	1	1m	

3.1.1.1.2 POD-H-PSU

	Q'ty	Length	Comments
H-PSU	1		
Quick Installation Guide	1		
Rack mount bracket	1		
Power & signal cable between H-DMCU and H-PSU	1	2m	Refer to section 4.1.1
Ethernet Cable between H-DMCU and H-PSU	1	2m	
GND Cable	1	1m	
AC Cable (H-SPU-AC only)	1	2m	

3.1.1.1.3 POD-H-SRU

	Q'ty	Length	Comments
H-SRU	1		
H-FAU	1		FAN Unit
Quick Installation Guide	1		
Rack mount bracket	1		
Power & signal cable between H-PSU and H-SRU	1	2m	Refer to section 4.1.1
Power & signal cable between H-SRU and H-FAU	1	2m	
GND Cable	1	1m	

3.1.1.1.4 POD-H-SCM

	Q'ty	Length	Comments
H-SCM	1		
Ethernet Cable between H-DMCU and H-SCM, or between H-MCM and H-SCM	1	2m	Refer to section 4.1.1

3.1.1.1.5 POD-H-MCM

	Q'ty	Length	Comments
H-MCM	1		
Ethernet Cable between H-DMCU and H-MCM	1	2m	Refer to section 4.1.1

© KMW USA Inc.
1818 E. Orangethrope Ave, Fullerton, CA 92831
Tel. +1 (714) 515-1100
www.kmwcomm.com

3.1.1.2 Remote Unit

3.1.1.2.1 7/5/3 band RU, PS700/800 RU

	Q'ty	Length	Comments
7/5/3 band RU or PS700/800 RU	1		
Quick Installation Guide	1		
wall mount bracket	1		
AC or DC input power cable	1	2m	Refer to section 4.2.1.1
Ethernet Cable for Web GUI or modem connection	1	2m	
GND Cable	1	2m	

© KMW USA Inc.
1818 E. Orangethrope Ave, Fullerton, CA 92831
Tel. +1 (714) 515-1100
www.kmwcomm.com

3.2 Head-end Unit Equipment Installation

3.2.1 Installation Head-end Unit in a 19” rack

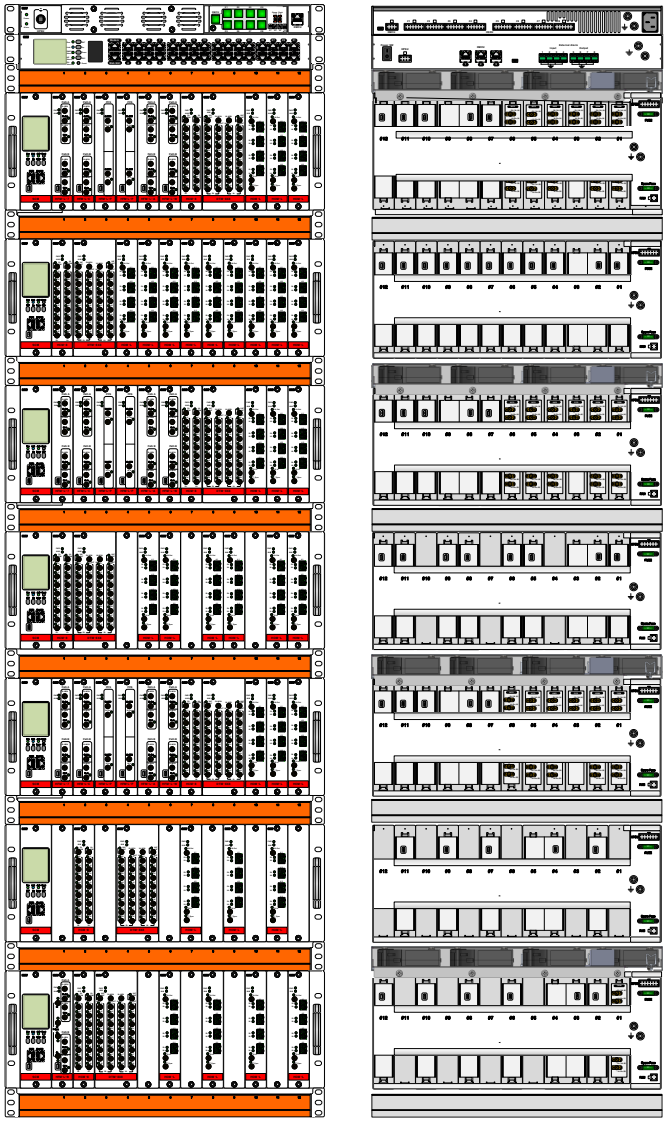

Figure 3-1 Head-end Unit Rack Mount (Front & Rear view)

- **CAUTIONS AND CONSIDERATIONS**
  - POD Head-end system should be installed inside building only and mounts in a standard 19” rack.
  - The rule for installing FAN unit: refer to section -
  - Allowed minimum clearance
    - > Front and Rear: 10” (254mm)
    - > Both sides:2” (51mm)
    - > Top and bottom: No clearance is required.

3.2.1.1 The sequence for mounting head-end unit

The sequence for mounting each head-end unit is as below.

- **(1)**H-PSU → **(2)**H-DMCU →**(3-1)**H-CDU #1 →**(4-1)**H-SRU #1 … **(3-7)**H-CDU #7 →**(4-7)**H-SRU #7 →**(5)**H-FAU
  - > H-PSU must be installed at the top of the rack.
  - > H-DMCU must be installed right below H-PSU on the rack.
  - > H-SRU must be installed below H-DMCU with skip 1U gap
  - > H-CDU must be installed between H-DMCU and H-SRU.
  - > H-FAU (FAN Unit) will be installed in the empty space from rear side of H-CDU (Cable duck Unit).
- Regarding FAN installation, refer to section -.

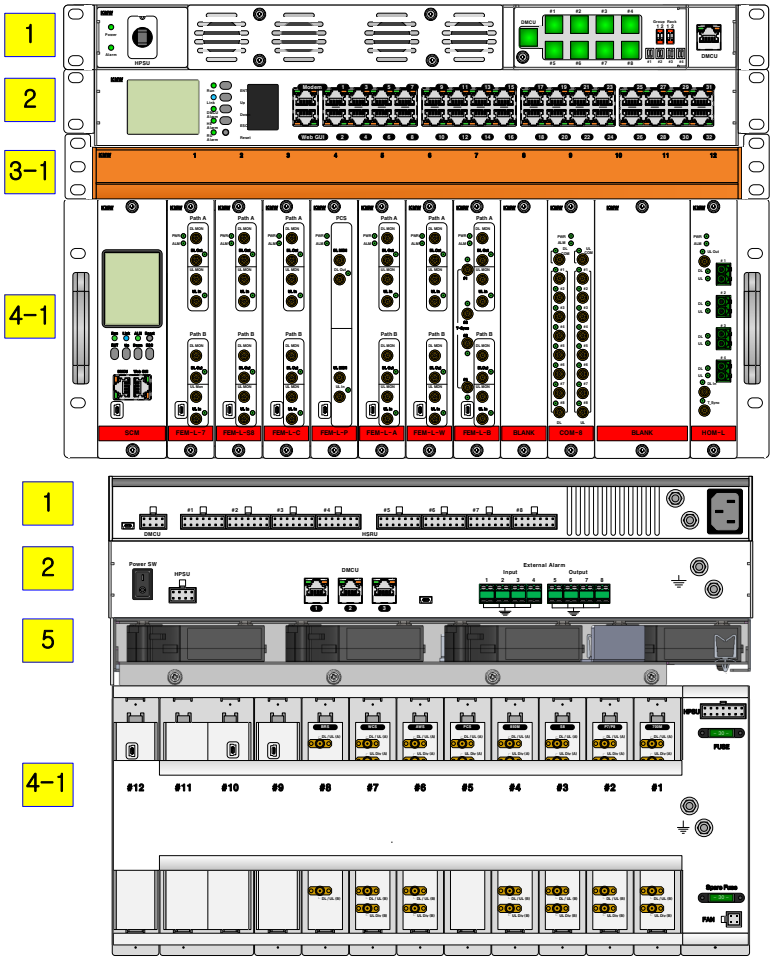

Figure 3-2 Head-end Unit - Rack Mount Sequence

3.2.2 Grounding

The grounding terminals are located at the rear of H-PSU, H-DMCU, and H-SRU. They must be grounded properly before powering on the equipment.

Figure 3-10 Head-end units Grounding

3.2.3 Optic port Cleaning

- We recommend that optic connector should be cleaned using a dry optical cleaning swab or tissue in a dry environment before connecting optic cable. Also, if the expected optic loss is 1.5dB higher than the loss reported in the Web-GUI, the optic loss should be minimized through cleaning optic connectors.(Figure 3-3)
- The unused optic ports are should be covered with a protective dust cap. (Figure 3-4)

Figure 3-3 Optic Connector Cleaning (left) and Optic Port Cleaning (right)

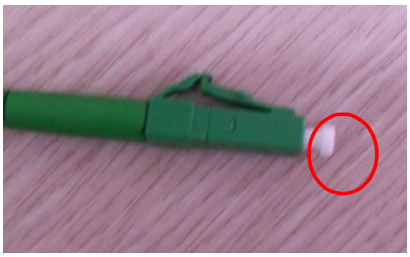

Figure 3-4 LC/APC Optic Connector Dust Cap

3.3 Remote Unit

3.3.1 Wall Mount for 3/5/7 band RU and PS700/800 RU

- Wall mounting procedure
  - Check the suitability of the wall-mounting kit and the wall based on Figure 3-5

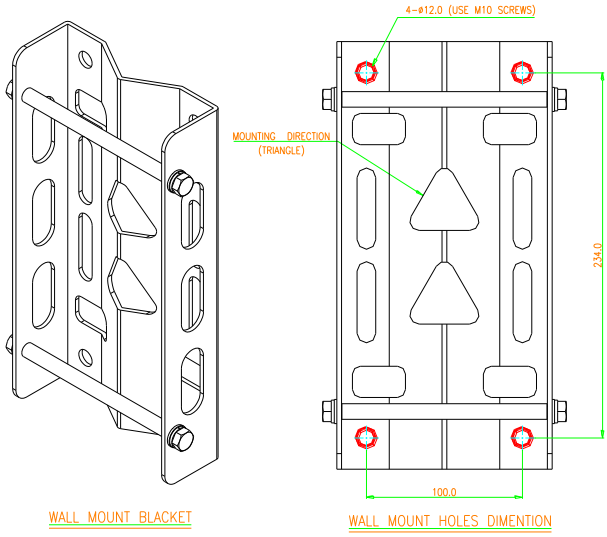

Figure 3-5 3/5/7 band RU, PS700/800 RU – wall mount bracket

- Install the wall-mounting bracket using 4 x M10 screw anchors **(not included**)** according to the drilling layout. Confirm that the bracket is securely fastened to the wall.
  > ** The M10 screw anchors are not included as part of the RU delivery because the suitable type depends on the on-site conditions such as wall structure and materials. Therefore, use screw anchors that are appropriate for the mounting surface.
- Install the Remote Unit on the wall-mounting bracket by lifting the RU into place and lowering it down onto the bracket. **The M6 pins must align with the slots in the bracket to support the RU**.

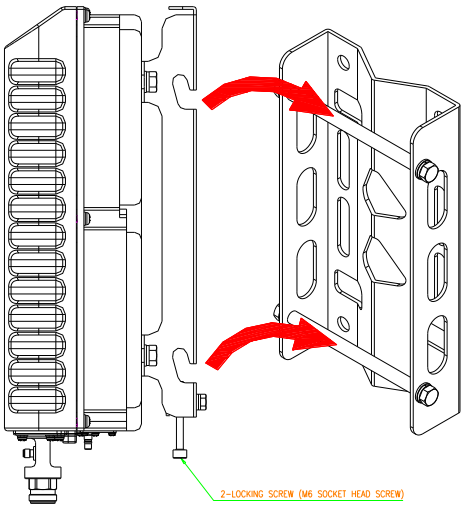

Figure 3-6 3/5/7 band RU, PS700/800 RU – Install RU into wall mount bracket

- Fasten the lower section of the Remote Unit to the bracket using a washer and 2 x M6 screws (on both sides). Slide a washer over each screw and then insert the screw and tighten it securely.

- Confirm that all screws have been fastened and the unit is securely mounted to the wall.

Figure 3-7 3/5/7 band RU, PS700/800 RU – RU installed on the wall

3.3.2 Grounding

3.3.2.1 3/5/7 band RU, PS700/800 RU

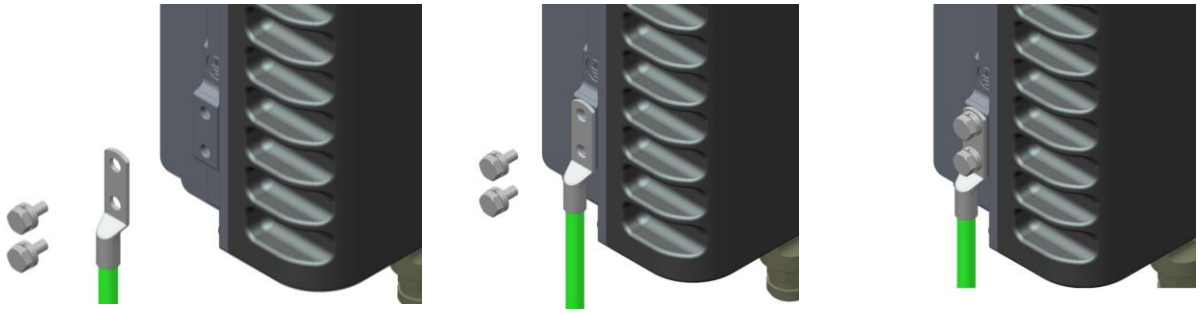

Step A **Step B** **Step C**

Figure 3-8 3/5/7 band RU grounding

- Connect an earth-bonding cable to the grounding bolt connection provided on the outside of the remote unit (Left-side) as shown in Figure 3-8. Do not use earth-bonding cable to connect other external devices.
  > loosen the two hex bolts attached to remote unit as illustrated in Figure 3-8, Step A
  > Connect the earth-bonding cable to remote unit as illustrated in Figure 3-8, Step B
  > Then, fasten all parts again by tightening the hex bolts as illustrated in Figure 3-8, Step C
- Connect the other end of the ground wire to a suitable permanent ground following local electrical code practices.

4. CABLE CONNECTION

4.1 Head-end Unit Cable Connection

4.1.1 Cable

- RF Cable
  - Between modules in H-SRU or between H-SRUs
    - > **Downlink**
      - Connector: SMB-L, female
      - Cable Color**: Blue Jacket**
    - > **Uplink**
      - Connector: SMB-L, female
      - Cable Color**: Yellow Jacket**
  - CAUTION) RF cable with 35” length will be provided normally. 60” and 90” RF cable can be provided by user’s special order.
- Ethernet cable
  - Between H-DMCU and H-SCM or H-PSU
    - Connector: RJ45, female
    - Length: 2m
- Power & Signal cable
  - Between H-DMCU and H-PSU
    - > Length: 30cm
  - Between H-SRU and H-PSU
    - > Length: 2m
  - Between H-SRU and H-FAU
    - > Length: 40cm
  - AC Power Cable
    - > Length: 2m
- GND Cable
  - H-DMCU, H-PSU, H-SRU
    - > Length: 1m

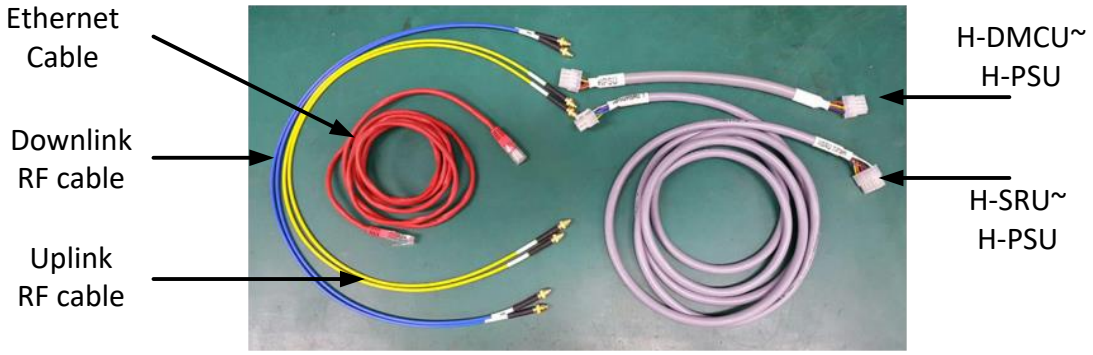

Figure 4-1 Head-end - cables

4.1.2 Cable Connection Example for frequency bands with FDD type

- POD DAS System configuration
  - H-DMCU : 1ea
  - H-PSU: 1ea
  - H-SRU: 1ea (H-SCM, H-FAU, H-CDU)
  - H-FEM: 5ea (FEM-L-7, FEM-L-C, FEM-L-P, FEM-L-A, FEM-L-W)
  - H-COM: 1ea
  - H-DTM: 1ea
  - H-HOM-L: 4ea

Figure 4-2 shows cable connection example for frequency bands with FDD type.

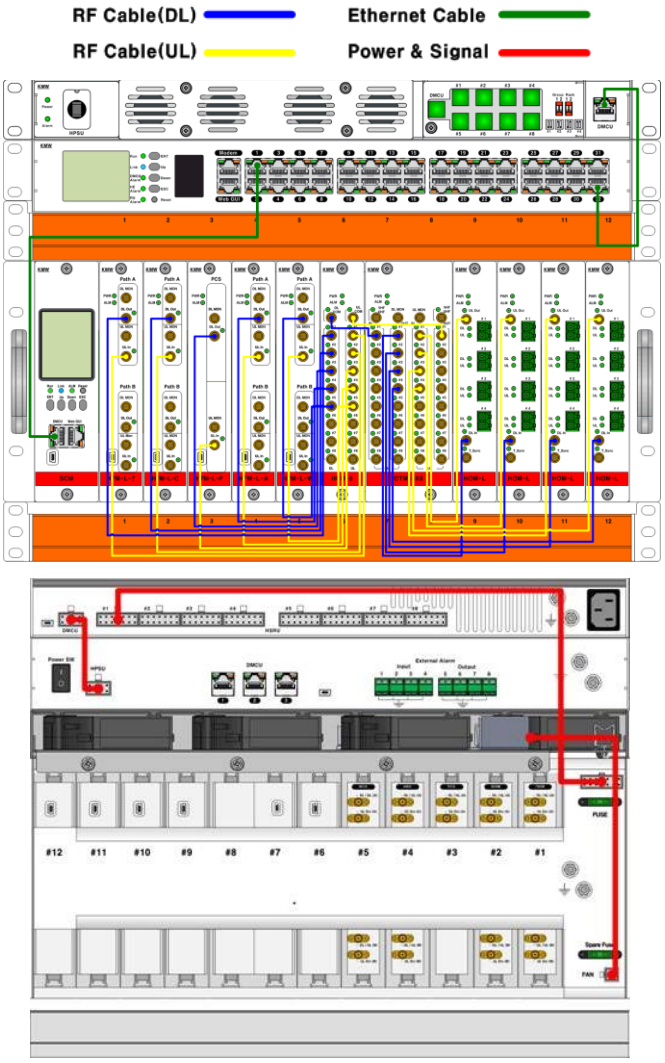

Figure 4-2 Cable Connection Example for frequency bands with FDD type

- RF cable connection
  - The RF ports for BTS connection are located in the back of H-SRU.
  - All RF ports for the connection between modules installed in H-SRU are located in the front of H-SRU.
- Optic cable connection
  - The optic ports for the connection with Remote units are located in the front panel of H-HOM-L.
- Ethernet cable connection

	From	To	Comments
Ethernet cable	H-DMCU	H-SCM	
	H-DMCU	H-PSU	

- Power & signal cable connection

	From	To	Comments
Power & Signal cable	H-PSU	H-DMCU	
	H-PSU	H-SRU	
	H-SRU	H-FAU	

© KMW USA Inc.
1818 E. Orangethrope Ave, Fullerton, CA 92831
Tel. +1 (714) 515-1100
www.kmwcomm.com

4.1.3 Cable Connection for TDD 2.6G frequency band

- POD DAS System configuration
  - H-DMCU : 1ea
  - H-PSU: 1ea
  - H-SRU: 1ea (H-SCM, H-FAU, H-CDU)
  - H-FEM: 1ea (FEM-L-B)
  - H-COM: 1ea
  - H-DTM: 1ea
  - H-HOM-L: 4ea

Figure 4-3 shows cable connection example for TDD 2.6G frequency band.

In case of 2.6G supporting TDD system, TDD sync signal generated from H-FEM-L-B should be transferred to RU to synchronize TDD timing in overall POD DAS system. H-FEM-L-B has 4 TDD sync output port and each TDD sync port is connected to TS sync port of H-HOM-L to transfer TDD signal over optic cable.

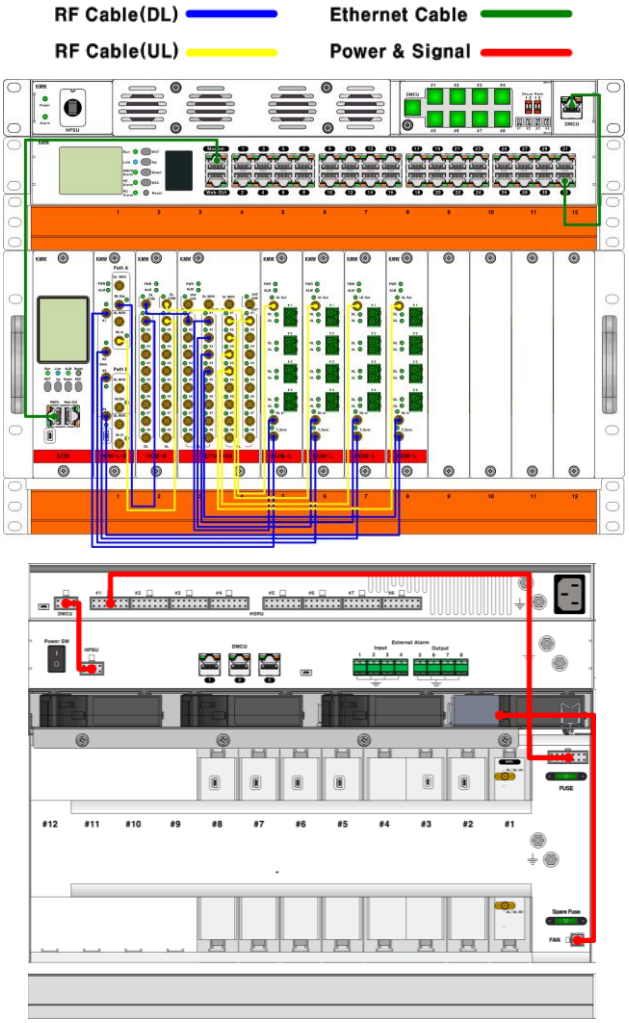

Figure 4-3 Cable Connection Example #1 for TDD 2.6G frequency band

- RF cable connection
  - The RF ports for BTS connection are located in the back of H-SRU.
  - All RF ports for the connection between modules installed in H-SRU are located in the front of H-SRU.
- RF cable connection for TDD sync signal transfer

	From		To	
	Module	**port**	**Module**	**port**
RF cable	H-FEM-L(H)-B	T-Sync #1~#4	H-HOM	T_Sync

- Optic cable connection
  - The optic ports for the connection with Remote units are located in the front panel of H-HOM-L.
- Ethernet cable connection

	From	To	Comments
Ethernet cable	H-DMCU	H-SCM	
	H-DMCU	H-PSU	

- Power & signal cable connection

	From	To	Comments
Power & Signal cable	H-PSU	H-DMCU	
	H-PSU	H-SRU	
	H-SRU	H-FAU	

© KMW USA Inc.
1818 E. Orangethrope Ave, Fullerton, CA 92831
Tel. +1 (714) 515-1100
www.kmwcomm.com

4.1.4 Cable Connection Example for Public Safety 700/800 band

- POD DAS System configuration
  - H-MCM : 1ea (or H-DMCU)
  - H-PSM-OI: 1ea (or H-PSU)
  - H-SRU: 1ea (H-SCM, H-FAU, H-CDU)
  - H-FEM: 1ea (FEM-L-P7/P8)
  - H-COM: 1ea
  - H-DTM: 1ea
  - H-HOM-L: 2ea

Figure 4-4 shows cable connection example for Public Safety 700/800 band.

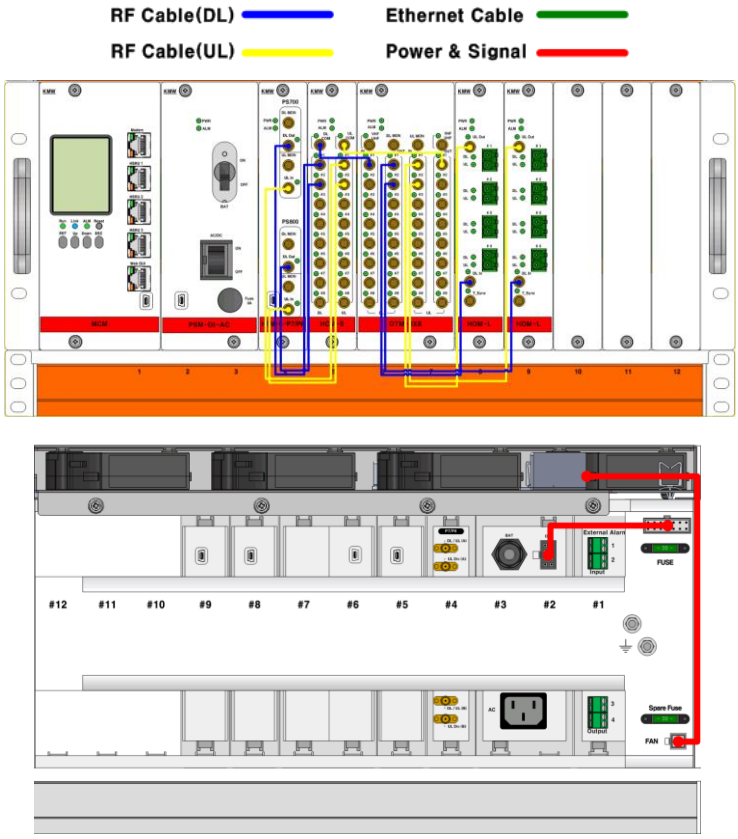

Figure 4-4 Cable Connection Example for Public Safety 700/800 band

- RF cable connection
  - The RF ports for BTS connection are located in the back of H-SRU.
  - All RF ports for the connection between modules installed in H-SRU are located in the front of H-SRU.
- Optic cable connection
  - The optic ports for the connection with Remote units are located in the front panel of H-HOM-L.
- Power & signal cable connection

	From	To	Comments
Power & Signal cable	H-PSM	H-SRU	
	H-SRU	H-FAU	

4.1.5 Cable Connection Example for MIMO configuration

- POD DAS System configuration
  - H-DMCU : 1ea
  - H-PSU: 1ea
  - H-SRU: 2ea (H-SCM, H-FAU, H-CDU)
  - H-FEM: 6ea (H-FEM-L-7, H-FEM-L-C, H-FEM-L-P x2, H-FEM-L-A, H-FEM-L-W)
    - > H-FEM-L-7, H-FEM-L-C, H-FEM-L-A, and H-FEM-L-W can support MIMO configuration by using one H-FEM-L module because they have two paths in one module.
    - > H-FEM-L-P supports only one path in one module. 2 H-FEM-L-P are needed to support MIMO configuration for PCS frequency band.
  - H-COM: 1ea
  - H-DTM: 1ea
  - H-HOM-L: 3ea

Figure 4-5 shows cable connection example for MIMO configuration.

- MIMO #1
  - H-FEM-L-x in H-SRU #1
  - H-COM, H-DTM, and H-HOM-L in H-SRU #1
- MIMO #2
  - H-FEM-L-x in H-SRU #1
  - H-COM, H-DTM, and H-HOM-L in H-SRU #2

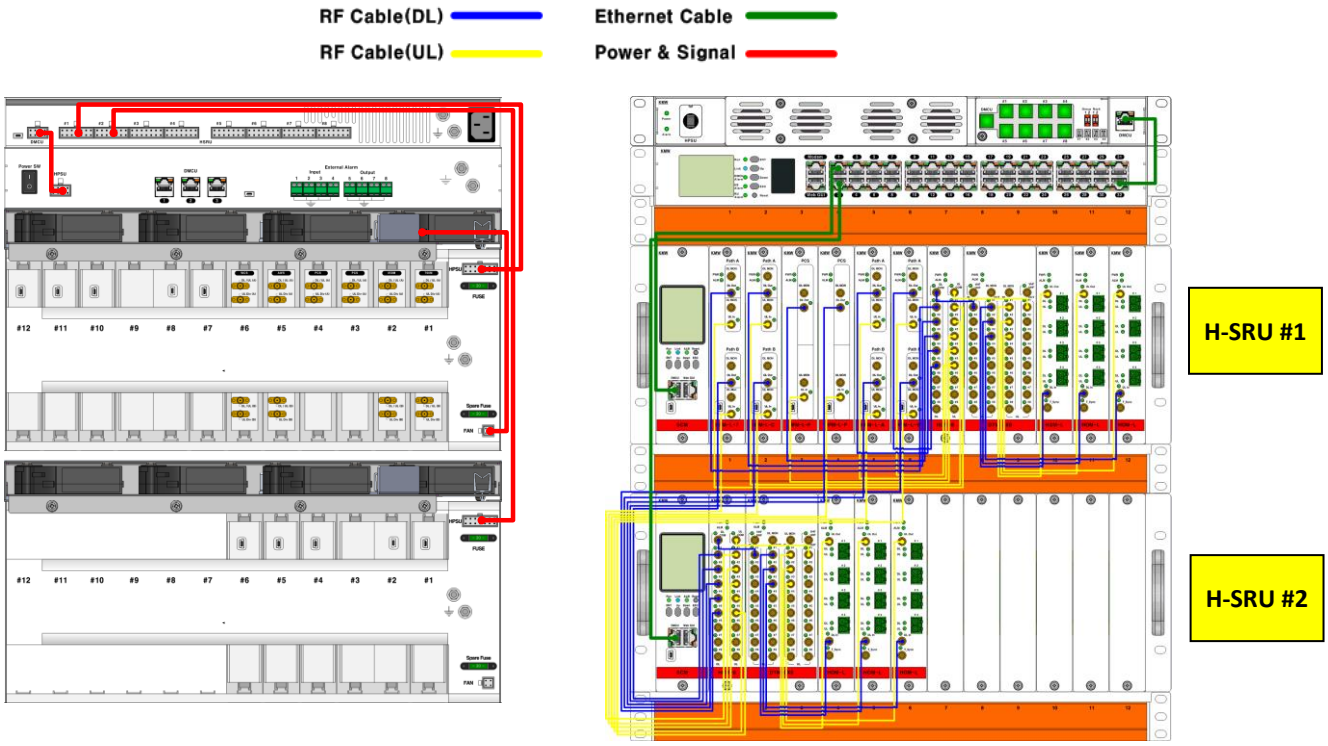

Figure 4-5 Cable Connection for FDD frequency band (MIMO) support

- RF cable connection
  - The RF ports for BTS connection are located in the back of H-SRU.
  - All RF ports for the connection between modules installed in H-SRU are located in the front of H-SRU.
  - RF cable connection For MIMO #1
    - H-FEM-L-x in H-SRU #1 ←→ H-COM in H-SRU #1 ←→ H-DTM in H-SRU #1 ←→ H-HOM-L in H-SRU #1
  - RF cable connection For MIMO #2
    - H-FEM-L-x in H-SRU #1 ←→ H-COM in H-SRU #2 ←→ H-DTM in H-SRU #2 ←→ H-HOM-L in H-SRU #2
- Optic cable connection
  - The optic ports for the connection with Remote units are located in the front panel of H-HOM-L.
- Ethernet cable connection

	From	To	Comments
Ethernet cable	H-DMCU	H-SCM in H-SRU #1	
	H-DMCU	H-SCM in H-SRU #2	
	H-DMCU	H-PSU	

- Power & signal cable connection

	From	To	Comments
Power & Signal cable	H-PSU	H-DMCU	
	H-PSU	H-SRU #1	
	H-PSU	H-SRU #2	
	H-SRU	H-FAU in H-SRU #1	

© KMW USA Inc.
1818 E. Orangethrope Ave, Fullerton, CA 92831
Tel. +1 (714) 515-1100
www.kmwcomm.com

4.1.6 Cable connection between multiple Racks

Figure 4-6 shows how to connect cable and set rack ID for IP setting.

- One H-DMCU is able to control and monitor maximum up to 4 racks and one rack can be composed of maximum 7 H-SRUs and one H-DMCU. All H-PSU, H-SCM, and H-MCM are connected to H-DMCU through 32 Ethernet ports located in front side of H-DMCU.
- Rack ID can be set by dip switch in H-PSU.
  - Refer to section 2.1.12.7 to figure out how to set Rack ID.
- It might need longer RF cable than RF cable with 35”length included in the packaged box for the connection between racks. In this case, user needs to buy extra cable with longer length in advance. For your information, RF cable with 60”, and 90” length can be provided by user’s special order.

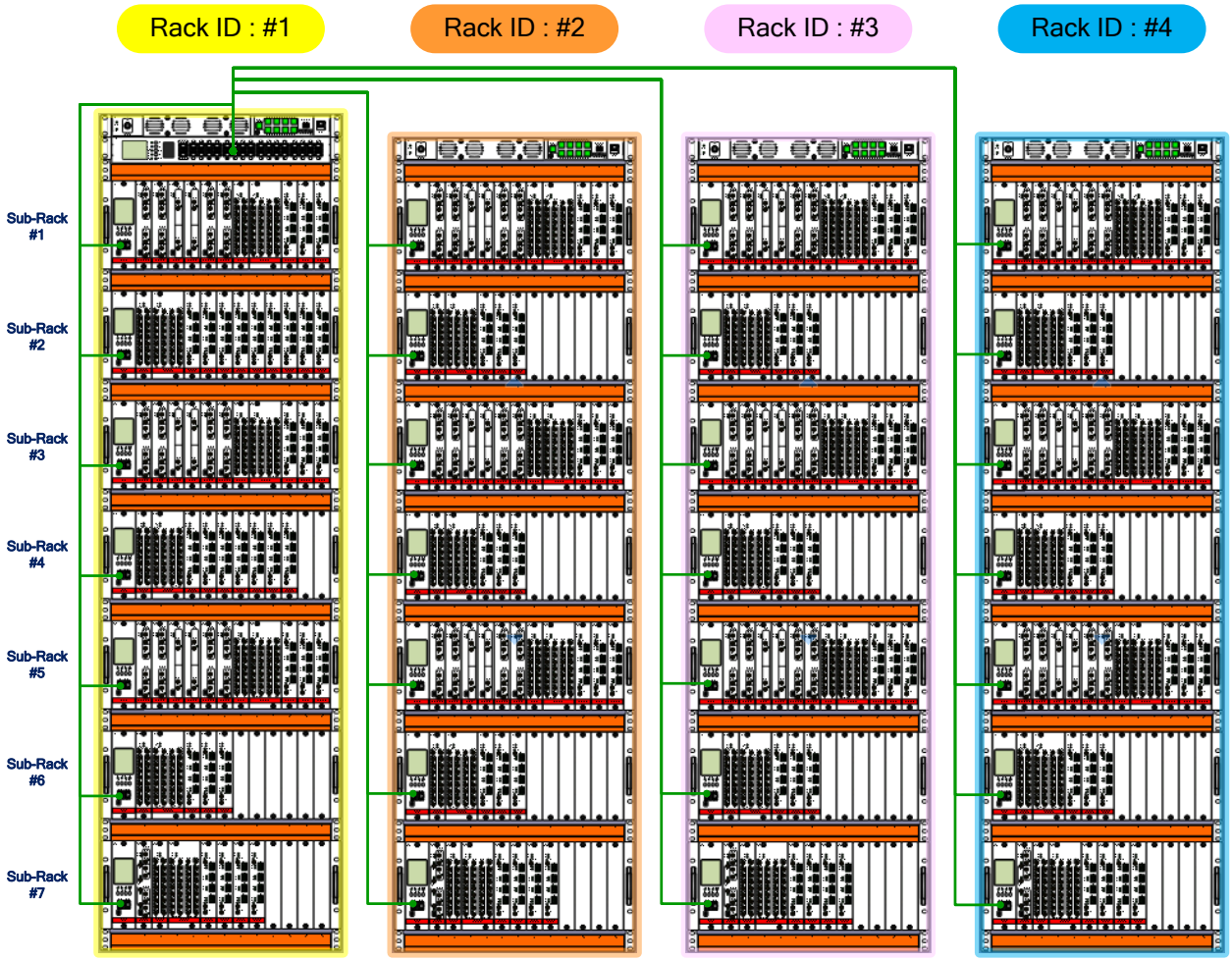

Figure 4-6 Connection Diagram for Rack Inter Connection

4.2 Remote Unit Cable Connection

4.2.1 7/5/3 band & PS700/800 RU

4.2.1.1 Cable

- Ethernet cable
  - For web GUI connection or connection with expansion RU
    - Connector: RJ45, female
    - Length: 2m
- AC or DC Power cable
  - Length: 2m
- GND Cable
  - Length: 2m

© KMW USA Inc.
1818 E. Orangethrope Ave, Fullerton, CA 92831
Tel. +1 (714) 515-1100
www.kmwcomm.com

4.2.1.2 Optic cable connection

- After loosening 4x SECURITY SCREWS (M4), open the door for debug window.

- After loosening 5x SECURITY SCREWS (M4), open front door.

- After taking out of gasket from optic cable entrance located in left side, pass optic cable through this entrance.

- Connect optic cable to optic port located on the left top side in debug window.

- Replace gasket into optic cable entrance.

- Continue in section 4.2.1.3.

4.2.1.3 AC or DC power cable connection

- After taking out of gasket from power cable entrance located in right side, pass power cable through this entrance.

- Connect power cable to AC (or DC) power terminal. In case of AC power cable, fasten ground cable by using GND SCREW to GND position located on the right top side in debug window.

- Replace gasket into power cable entrance.

- If there is no expansion RU connected main RU, close/fasten the door for debug window and front door by using SECURITY SCREWS (M4) and allowed Torque: 12.0 Kgf•cm.
- If there is an expansion RU connected main RU, continue in section 4.2.1.4.

4.2.1.4 Ethernet cable connection for connecting with Expansion RU

If there is an expansion RU connected main RU, connect Ethernet cable with expansion RU before closing the door for debug window and front door.

- After taking out of gasket from Ethernet cable entrance located in the middle, pass Ethernet cable through this entrance.

- Connect Ethernet cable to EXT port (RJ 45).

- Replace gasket into Ethernet cable entrance.

- Close/fasten the door for debug window and front door by using SECURITY SCREWS (M4) and allowed Torque: 12.0 Kgf•cm.

- Connect the other side of Ethernet cable to EXT pot of expansion RU based on section 4.2.1.4.

CAUTION) *The location of EXT pot in expansion RU is different from the location of EXT port in main RU. Make sure where the location of EXT port in expansion RU is (refer to Figure 2-57) before connecting Ethernet cable to expansion RU*.

5. SPECIFICATION

5.1 Electrical Specifications (Low power HFM – Low power RU)

Table 5-1 POD DAS 2-Band RU Electrical Specifications (POD-R-P78-27-AC/DC)

Parameter		Specifications		Remark
		PS 700	PS 800	
Frequency	DL	758 - 775M	851 - 869M	
	UL	788 - 805M	806 - 824M	
Input	DL	-40 ~ 20dBm		
	UL	-42dBm	-42dBm	
Maximum Output	DL	27dBm		@all temperature range
	UL	-5dBm		@all temperature range
Gain Range	DL	7dB to 67dB		
	UL	-8dB to 37dB		
Noise Figure @Max Gain		< 6 dB		@1 RU, optic loss: 0dB
Input/output Impedance		50 ohm		
VSWR		< 1:1.7		
System Delay		< 2us @2.6G, < 5us @other bands		
Permitted optic loss		HOM-L: ~7.5dBo, HOM-H/OEM/OIM: ~10.5dBo		
Frequency Error & EVM (LTE)		Frequency Error: <±0.01ppm, EVM: < 5%		
Frequency Error & Rho (CDMA)		Frequency Error: <±0.05ppm, Rho: >0.912		
Out of Band Emission		-13dBm/1KHz @9KHz – 150KHz		
		-13dBm/10KHz @150KHz – 30MHz		
		-13dBm/100KHz @30MHz – 1GHz		
		-13dBm/1MHz @1GHz – 12.75GHz		
Operating Band Unwanted Emissions	CDMA	-45dBc/30KHz @±885KHz, -45dBc/30KHz @±1.125MHz -50dBc/30KHz @±1.98MHz, <-13dBm/30KHz @±2.25MHz, <-13dBm/1MHz @±4.0MHz		
	WCDMA/LTE	Meet 3GPP WCDMA/LTE Repeater Spec.		
2 tone CW Test		Downlink: > 40dBc, Uplink: > 50dBc @two CW tone 1MHz separation		
Operating Temperature	Head-end	-10 ~ +50°C		
	RU	-40 ~ +55°C		
Operating Humidity		≤ 95%, non-condensing		
RU Enclosure		Meet IP65, NEMA4X		

Table 5-2 POD DAS 7-Band RU Electrical Specifications (POD-R-7S8CPAWB-2730-AC/DC)

Parameter		Specifications						Remark
		700M	SMR 800 + 850M	PCS	AWS	WCS	2.5G	
Frequency	DL	728-756M	862 - 894M	1930-1995M	2110-2180M	2350-2360M	2496-2690M	
	UL	698-716M 777-787M	817 - 849M	1850-1915M	1710-1780M (1710-1755M[1])	2305-2315M	2496-2690M	Note 1: when only it has BDA connection at Head-End)
Input	DL	-15 ~ 20dBm						
	UL	-42dBm		-45dBm				
Maximum Output	DL	27dBm		30dBm				@all temperature range
	UL	-5dBm						@all temperature range
Gain Range	DL	7dB to 42dB		10dB to 45dB				
	UL	-8dB to 37dB		-5dB to 40dB				
Noise Figure @Max Gain		< 6 dB						@1 RU, optic loss: 0dB
Input/output Impedance		50 ohm						
VSWR		< 1:1.7						
System Delay		< 2us @2.6G, < 5us @other bands						
Permitted optic loss		HOM-L: ~7.5dBo, HOM-H/OEM/OIM: ~10.5dBo						
Frequency Error & EVM (LTE)		Frequency Error: <±0.01ppm, EVM: < 5%						
Frequency Error & Rho (CDMA)		Frequency Error: <±0.05ppm, Rho: >0.912						
Out of Band Emission		-13dBm/1KHz @9KHz – 150KHz						
		-13dBm/10KHz @150KHz – 30MHz						
		-13dBm/100KHz @30MHz – 1GHz						
		-13dBm/1MHz @1GHz – 12.75GHz						
Operating Band Unwanted Emissions	CDMA	-45dBc/30KHz @±885KHz, -45dBc/30KHz @±1.125MHz, -50dBc/30KHz @±1.98MHz <-13dBm/30KHz @±2.25MHz, <-13dBm/1MHz @±4.0MHz						
	WCDMA/LTE	Meet 3GPP WCDMA/LTE Repeater Spec.						
2 tone CW Test		Downlink: > 40dBc, Uplink: > 50dBc @two CW tone 1MHz separation						
Operating Temperature	Head-end	-10 ~ +50°C						
	RU	-40 ~ +55°C						
Operating Humidity		≤ 95%, non-condensing						
RU Enclosure		Meet IP65, NEMA4X						

© KMW USA Inc.
1818 E. Orangethrope Ave, Fullerton, CA 92831
Tel. +1 (714) 515-1100
www.kmwcomm.com

5.2 Additional Model Names

Each 2-Band and 7-Band RU has several additional models from the basic model. They are identical to basic model except only with blocked RF band(s) by Factory loaded software and without hardware changing. So Basic model supports up to specified number of bands and additional models supports less number of bands with several blocked RF band(s).

The table shown in below shows the basic model and additional models which are derived from the basic model.

Table 5-3 Basic Model and Additional Models on 2-Band Remote Unit

Basic Model	Additional Model	Activated RF Band	Blocked RF band
POD-R-P78-27-AC	-	PS 700M, PS 800M	N/A
	POD-R-P7-27-AC	PS 700M	PS 800M
	POD-R-P8-27-AC	PS 800M	PS 700M

Table 5-4 Basic Model and Additional Models on 7-Band Remote Unit

Basic Model	Additional Model	Activated RF Band	Blocked RF band
POD-R-7S8CPAWB-2730-AC	-	LTE 700M, SMR 800M, Cellular 850M, PCS 1.9G, AWS 2.1G, WCS 2.3G, BRS 2.5G	N/A
	POD-R-7S8CPAW-2730-AC	LTE 700M, SMR 800M, Cellular 850M, PCS 1.9G, AWS 2.1G, WCS 2.3G	BRS 2.5G
	POD-R-7CPAWB-2730-AC	LTE 700M, Cellular 850M, PCS 1.9G, AWS 2.1G, WCS 2.3G, BRS 2.5G	SMR 800M
	POD-R-7CPAW-2730-AC	LTE 700M, Cellular 850M, PCS 1.9G, AWS 2.1G, WCS 2.3G	SMR 800M, BRS 2.5G
	POD-R-7CPA-2730-AC	LTE 700M, Cellular 850M, PCS 1.9G, AWS 2.1G,	SMR 800M, WCS 2.3G, BRS 2.5G
	POD-R-7PA-2730-AC	LTE 700M, PCS 1.9G, AWS 2.1G	SMR 800M, Cellular 850M, WCS 2.3G, BRS 2.5G
	POD-R-CPA-2730-AC	Cellular 850M, PCS 1.9G, AWS 2.1G	LTE 700M, SMR 800M, WCS 2.3G, BRS 2.5G
	POD-R-7CP-2730-AC	LTE 700M, Cellular 850M, PCS 1.9G	SMR 800M, AWS 2.1G, WCS 2.3G, BRS 2.5G
	POD-R-S8PB-2730-AC	SMR 800M, PCS 1.9G, BRS 2.5G	LTE 700M, Cellular 850M, AWS 2.1G, WCS 2.3G,

© KMW USA Inc.
1818 E. Orangethrope Ave, Fullerton, CA 92831
Tel. +1 (714) 515-1100
www.kmwcomm.com