FCC 47 CFR PART 15 SUBPART C

for

SBM-U-BW, WBUW

Model: SLP-B211BWUXWW, WBUW

Brand: SAMSUNG, WiSilica

Test Report Number:

C180509Z10-RP1-1

Issued for

TCL Technoly Electronics (Huizhou) Co., Ltd.
Section 37, Zhongkai High-tech development Zone Huizhou City Guangdong Province China 516006.

Issued by:

Compliance Certification Services (Shenzhen) Inc.
No.10-1, Mingkeda Logistics Park, No.18 Huanguan South Rd.,
Guan Lan Town, Baoan District, Shenzhen, China
TEL: 86-755-28055000
FAX: 86-755-28055221
E-Mail: service@ccssz.com

Issued Date: June 1, 2018

ACCREDITED
Certificate Number: 2861.01

Note: *This report shall not be reproduced except in full, without the written approval of Compliance Certification Services (Shenzhen) Inc. This document may be altered or revised by Compliance Certification Services (Shenzhen) Inc. personnel only, and shall be noted in the revision section of the document. The client should not use it to claim product endorsement by TAF, A2LA, NVLAP, NIST, CNAS or any government agencies. The test results in the report only apply to the tested sample.*

Revision History

Rev.	Issue Data	Revisions	Effect Page	Revised By
00	June 1, 2018	Initial Issue	ALL	Amzula Chen

This report shall not be reproduced except in full, without the written approval of Compliance Certification Services (Shenzhen) Inc.

TABLE OF CONTENTS

1 TEST CERTIFICATION 4
2 TEST RESULT SUMMARY 5
3 EUT DESCRIPTION 6
4 TEST METHODOLOGY 7
4.1. DESCRIPTION OF TEST MODES 7
5 SETUP OF EQUIPMENT UNDER TEST 8
5.1. DESCRIPTION OF SUPPORT UNITS 8
5.2. CONFIGURATION OF SYSTEM UNDER TEST 8
6 FACILITIES AND ACCREDITATIONS 9
6.1. FACILITIES 11
6.2. ACCREDITATIONS 11
6.3. MEASUREMENT UNCERTAINTY 12
7 FCC PART 15.247 REQUIREMENTS 13
7.1. POWER LINE CONDUCTED EMISSIONS MEASUREMENT 13
7.2. SPURIOUS EMISSIONS MEASUREMENT 17
7.3. 6dB BANDWIDTH MEASUREMENT 34
7.4. ANTENNA GAIN 37
7.5. PEAK OUTPUT POWER 38
7.6. BAND EDGES MEASUREMENT 40
7.7. PEAK POWER SPECTRAL DENSITY MEASUREMENT 41

This report shall not be reproduced except in full, without the written approval of Compliance Certification Services (Shenzhen) Inc.

1 TEST CERTIFICATION

Product	SBM-U-BW, WBUW
Model	SLP-B211BWUXWW, WBUW
Brand	SAMSUNG, WiSilica
Tested	May 9~May 31, 2018
Applicant	**TCL Technoly Electronics (Huizhou) Co., Ltd.** Section 37, Zhongkai High-tech development Zone Huizhou City Guangdong Province China 516006.
Manufacturer	**TCL Technoly Electronics (Huizhou) Co., Ltd.** Section 37, Zhongkai High-tech development Zone Huizhou City Guangdong Province China 516006.

APPLICABLE STANDARDS			
Standard	**Test Type**	**Standard**	**Test Type**
15.207(a)	Power Line Conducted Emissions	15.247(d) 15.209(a)	● Spurious Emissions ● Conducted Measurement ● Radiated Emissions
15.247(a)(2)	6dB Bandwidth Measurement	15.247(b)(3) 15.247(b)(4)	Peak Power Measurement
15.247(d)	Band Edges Measurement	15.247(e)	Peak Power Spectral Density

We hereby certify that:

The above equipment was tested by Compliance Certification Services (Shenzhen) Inc. The test data, data evaluation, test procedures, and equipment configurations shown in this report were made in accordance with the procedures given in **ANSI C63.10: 2013** and the energy emitted by the sample EUT tested as described in this report is in compliance with the requirements of FCC Rules Part 15.207, 15.209, 15.247.

The test results of this report relate only to the tested sample EUT identified in this report.

Approved by:

Eve. Wang

Eve Wang
Supervisor of EMC Dept.
Compliance Certification Services (Shenzhen) Inc.

Reviewed by:

Nancy Fu

Nancy Fu
Supervisor of Report Dept.
Compliance Certification Services (Shenzhen) Inc.

This report shall not be reproduced except in full, without the written approval of Compliance Certification Services (Shenzhen) Inc.

2 TEST RESULT SUMMARY

APPLICABLE STANDARDS			
Standard	**Test Type**	**Result**	**Remark**
15.247(a)(2)	6dB Bandwidth Measurement	Pass	Meet the requirement of limit.
15.247(b)(3) 15.247(b)(4)	Peak Power Measurement	Pass	Meet the requirement of limit.
15.247(d)	Band Edges Measurement	Pass	Meet the requirement of limit.
15.247(e)	Peak Power Spectral Density	Pass	Meet the requirement of limit.
15.247(d) 15.209(a)	● Spurious Emissions ● Conducted Measurement ● Radiated Emissions	Pass	Meet the requirement of limit.
15.207(a)	Power line Conducted Emissions	Pass	Meet the requirement of limit.

Note: 1. The statements of test result on the above are decided by the request of test standard only; the measurement uncertainties are not factored into this compliance determination.
2. The information of measurement uncertainty is available upon the customer's request.

This report shall not be reproduced except in full, without the written approval of Compliance Certification Services (Shenzhen) Inc.

3 EUT DESCRIPTION

Product	SBM-U-BW, WBUW
Model	SLP-B211BWUXWW, WBUW
Brand	SAMSUNG, WiSilica
Discrepancy	They are identical to each other except for model name, product name and brand. **Model Name** / **Product Name** / **Brand** SLP-B211BWUXWW / SBM-U-BW / SAMSUNG WBUW / WBUW / WiSilica
Identify Number	C180509Z10-RP1-1
Received Date	May 9 ,2018
Power Supply	DC power supplied by Notebook
Frequency Range	2402MHz ~2480MHz
Transmit Power	4.60dBm
Modulation Technique	GFSK for 1Mbps
Number of Channels	40 Channels
Antenna Specification	Internal Antenna with 2.0dBi gain (Max)
Temperature Range	-20°C ~ +50°C
Hardware Version	2.1
Software Version	2.1.64

Note: *1. The sample selected for test was engineering sample that approximated to production product and was provided by manufacturer.*

2. This submittal(s) (test report) is intended for FCC ID:ZVA-IOT-S-SBM-U-B filing to comply with Section 15.207, 15.209 and 15.247of the FCC Part 15, Subpart C Rules.

This report shall not be reproduced except in full, without the written approval of Compliance Certification Services (Shenzhen) Inc.

4 TEST METHODOLOGY

4.1. DESCRIPTION OF TEST MODES

The EUT has been tested under operating condition.

Used the “EngineerMode”software to control the EUT for staying in continuous transmitting and receiving mode is programmed.

Test Item	Test mode	Worse mode
Conducted Emission	Mode 1: Normal	☒
Radiated Emission	Mode 1: Continuously Transmitting	☒

After verification, all tests were carried out with the worst case test modes as shown below except radiated spurious emission below 1GHz, which worst case was in normal link mode only.

This report shall not be reproduced except in full, without the written approval of Compliance Certification Services (Shenzhen) Inc.

5 SETUP OF EQUIPMENT UNDER TEST

5.1. DESCRIPTION OF SUPPORT UNITS

The EUT has been tested as an independent unit together with other necessary accessories or support units. The following support units or accessories were used to form a representative test configuration during the tests.

No	Equipment	Model	Serial No.	FCC ID	Brand	Data Cable	Power Cord
1	Notebook	Thinkpad S2	SL10K92342	DoC	LENOVO	N/A	Unshielded 1.00m (AC Cable) Shielded 1.80m (DC Cable)
2	mobile phone	MN3Q2CH/A	FCGV204CHFM2	DoC	Apple	N/A	N/A

Note:

Grounding was established in accordance with the manufacturer's requirements and conditions for the intended use.

5.2. CONFIGURATION OF SYSTEM UNDER TEST

See test photographs attached in Appendix II for the actual connections between EUT and support equipment.

This report shall not be reproduced except in full, without the written approval of Compliance Certification Services (Shenzhen) Inc.

5.3. TEST INSTRUMENTS

Conducted Emission Test Site					
Name of Equipment	**Manufacturer**	**Model Number**	**Serial Number**	**Last Calibration**	**Due Calibration**
EMI TEST RECEIVER	ROHDE&SCHWARZ	ESCI	100783	01/27/2018	01/26/2019
LISN(EUT)	ROHDE&SCHWARZ	ENV216	101543-WX	01/27/2018	01/26/2019
LISN	EMCO	3825/2	8901-1459	01/27/2018	01/26/2019
Temp. / Humidity Meter	VICTOR	HTC-1	N/A	01/29/2018	01/28/2019
Test S/W	FARAD	EZ-EMC/ CCS-3A1-CE			

Radiated Emission Test Site 966 (2)					
Name of Equipment	**Manufacturer**	**Model Number**	**Serial Number**	**Last Calibration**	**Due Calibration**
Spectrum Analyzer	Agilent	N9010A	MY52221469	01/27/2018	01/26/2019
EMI TEST RECEIVER	ROHDE&SCHWARZ	ESCI	100783	01/27/2018	01/26/2019
Amplifier	EMEC	EM330	060661	01/27/2018	01/26/2019
High Noise Amplifier	Agilent	8449B	3008A01838	01/27/2018	01/26/2019
Loop Antenna	COM-POWER	AL-130	121044	01/30/2018	01/29/2019
Bilog Antenna	SCHAFFNER	CBL6143	5082	02/21/2018	02/20/2019
Horn Antenna	SCHWARZBECK	BBHA9120	D286	01/27/2018	01/26/2019
Board-Band Horn Antenna	Schwarzbeck	BBHA 9170	9170-497	01/24/2018	01/23/2019
Turn Table	N/A	N/A	N/A	N.C.R	N.C.R
Antenna Tower	SUNOL	TLT2	N/A	N.C.R	N.C.R
Controller	Sunol Sciences	SC104V	022310-1	N.C.R	N.C.R
Controller	CT	N/A	N/A	N.C.R	N.C.R
Temp. / Humidity Meter	Anymetre	JR913	N/A	01/29/2018	01/28/2019
Test S/W	FARAD	LZ-RF / CCS-SZ-3A2			

Antenna Conducted Spurious Emission					
Name of Equipment	**Manufacturer**	**Model Number**	**Serial Number**	**Last Calibration**	**Due Calibration**
Spectrum Analyzer	Agilent	N9010A	MY52221469	01/27/2018	01/26/2019

6dB Bandwidth					
Name of Equipment	**Manufacturer**	**Model Number**	**Serial Number**	**Last Calibration**	**Due Calibration**
Spectrum Analyzer	Agilent	N9010A	MY52221469	01/27/2018	01/26/2019

This report shall not be reproduced except in full, without the written approval of Compliance Certification Services (Shenzhen) Inc.

Antenna Gain					
Name of Equipment	**Manufacturer**	**Model Number**	**Serial Number**	**Last Calibration**	**Due Calibration**
Spectrum Analyzer	Agilent	N9010A	MY52221469	01/27/2018	01/26/2019

Peak Output Power					
Name of Equipment	**Manufacturer**	**Model Number**	**Serial Number**	**Last Calibration**	**Due Calibration**
Power Meter	Anritsu	ML2495A	1204003	01/27/2018	01/26/2019
Power Sensor	Anritsu	MA2411B	1126150	01/27/2018	01/26/2019

Band edges					
Name of Equipment	**Manufacturer**	**Model Number**	**Serial Number**	**Last Calibration**	**Due Calibration**
Spectrum Analyzer	Agilent	N9010A	MY52221469	01/27/2018	01/26/2019

Peak Power Spectral Density					
Name of Equipment	**Manufacturer**	**Model Number**	**Serial Number**	**Last Calibration**	**Due Calibration**
Spectrum Analyzer	Agilent	N9010A	MY52221469	01/27/2018	01/26/2019

Note: 1. The calibration interval of the above test instruments is 12 months and the calibrations are traceable to NML/ROC and NIST/USA.

2. N.C.R = No Calibration Request.

This report shall not be reproduced except in full, without the written approval of Compliance Certification Services (Shenzhen) Inc.

6 FACILITIES AND ACCREDITATIONS

6.1. FACILITIES

All measurement facilities used to collect the measurement data are located at
No. 10-1, Mingkeda Logistics Park, No.18 Huanguan South RD. Guan Lan Town, Baoan District, Shenzhen China

The sites are constructed in conformance with the requirements of ANSI C63.10, ANSI C63.7 and CISPR Publication 22. All receiving equipment conforms to CISPR Publication 16-1, "Radio Interference Measuring Apparatus and Measurement Methods."

6.2. ACCREDITATIONS

Our laboratories are accredited and approved by the following accreditation body according to ISO/IEC 17025.

USA	**A2LA**
China	**CNAS**

The measuring facility of laboratories has been authorized or registered by the following approval agencies.

USA	**FCC**
Japan	**VCCI(C-4815, R-4320, T-2317, G-10624)**
Canada	**INDUSTRY CANADA**

Copies of granted accreditation certificates are available for downloading from our web site, http://www.ccssz.com

This report shall not be reproduced except in full, without the written approval of Compliance Certification Services (Shenzhen) Inc.

6.3. MEASUREMENT UNCERTAINTY

Where relevant, the following measurement uncertainty levels have been estimated for tests performed on the EUT as specified in CISPR 16-4-2:

Parameter	Uncertainty
Radiated Emission, 30 to 200 MHz Test Site : 966(2)	+/-3.6880dB
Radiated Emission, 200 to 1000 MHz Test Site : 966(2)	+/-3.6695dB
Radiated Emission, 1 to 8 GHz	+/-5.1782dB
Radiated Emission, 8 to 18 GHz	+/-5.2173dB
Conducted Emissions	+/-3.6836dB
Band Width	178kHz
Peak Output Power MU	+/-1.906dB
Band Edge MU	+/-0.182dB
Channel Separation MU	416.178Hz
Duty Cycle MU	0.054ms
Frequency Stability MU	226Hz

This uncertainty represents an expanded uncertainty expressed at approximately the 95% confidence level using a coverage factor of k=2.

The measured result is above (below) the specification limit by a margin less than the measurement uncertainty; it is therefore not possible to state compliance based on the 95% level of confidence. However, the result indicates that compliance (non-compliance) is more probable than non-compliance) with the specification limit.

This report shall not be reproduced except in full, without the written approval of Compliance Certification Services (Shenzhen) Inc.

7 FCC PART 15.247 REQUIREMENTS

7.1. POWER LINE CONDUCTED EMISSIONS MEASUREMENT

7.1.1. LIMITS OF CONDUCTED EMISSIONS MEASUREMENT

According to §15.207(a), except as shown in paragraphs (b) and (c) of this section, for an intentional radiator that is designed to be connected to the public utility (AC) power line, the radio frequency voltage that is conducted back onto the AC power line on any frequency or frequencies within the band 150 kHz to 30 MHz shall not exceed the limits in the following table, as measured using a 50 µH/50 ohms line impedance stabilization network (LISN). Compliance with the provisions of this paragraph shall be based on the measurement of the radio frequency voltage between each power line and ground at the power terminal. The lower limit applies at the boundary between the frequency ranges.

Frequency Range (MHz)	Limits (dBµV)	
	Quasi-peak	Average
0.15 to 0.50	66 to 56*	56 to 46*
0.50 to 5	56	46
5 to 30	60	50

NOTE:

(1) The lower limit shall apply at the transition frequencies.
(2) The limit decreases in line with the logarithm of the frequency in the range of 0.15 to 0.50 MHz.
(3) All emanations from a class A/B digital device or system, including any network of conductors and apparatus connected thereto, shall not exceed the level of field strengths specified above.

7.1.2. TEST PROCEDURES (please refer to measurement standard)

- The EUT and Support equipment, if needed, was placed on a non-conducted table, which is 0.8m above the ground plane and 0.4m away from the conducted wall.
- The test equipment EUT installed received AC main power, through a Line Impedance Stabilization Network (LISN), which supplied power source and was grounded to the ground plane. All support equipment power received from a second LISN. The two LISNs provide 50 ohm/ 50uH of coupling impedance for the measuring instrument.
- The EUT test program was started. Emissions were measured on each current carrying line of the EUT using an EMI Test Receiver connected to the LISN powering the EUT.
- The frequency range from 150 kHz to 30 MHz was searched. The test data of the worst-case condition(s) was recorded. Emission levels under limit 20dB were not recorded.

This report shall not be reproduced except in full, without the written approval of Compliance Certification Services (Shenzhen) Inc.

7.1.3. TEST SETUP

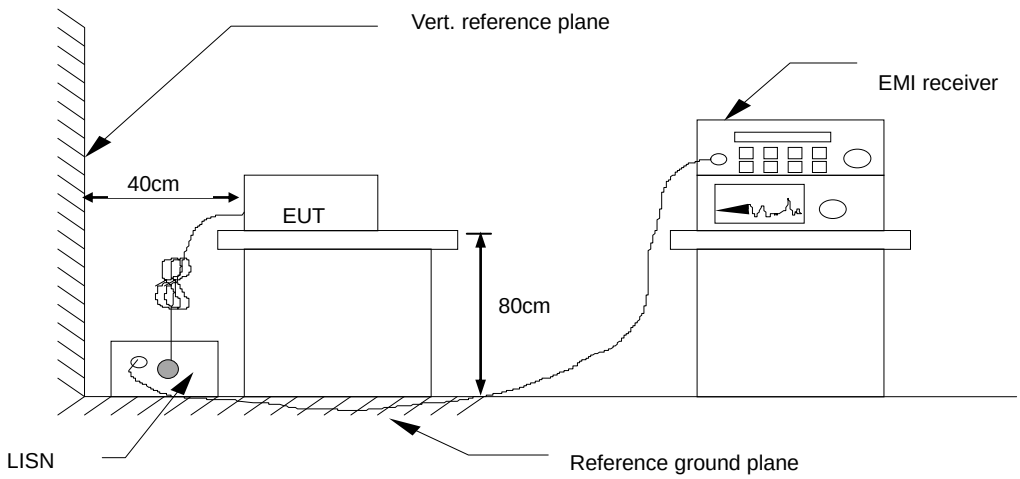

For the actual test configuration, please refer to the related item – Photographs of the Test Configuration.

7.1.4. DATA SAMPLE

Frequency (MHz)	QuasiPeak Reading (dBuV)	Average Reading (dBuV)	Correction Factor (dB)	QuasiPeak Result (dBuV)	Average Result (dBuV)	QuasiPeak Limit (dBuV)	Average Limit (dBuV)	QuasiPeak Margin (dB)	Average Margin (dB)	Remark (Pass/Fail)
X.XXXX	34.99	19.33	10.15	45.14	29.48	65.99	56.00	-20.85	-26.52	Pass

Factor = Insertion loss of LISN + Cable Loss
Result = Quasi-peak Reading/ Average Reading + Factor
Limit = Limit stated in standard
Margin = Result (dBuV) – Limit (dBuV)

This report shall not be reproduced except in full, without the written approval of Compliance Certification Services (Shenzhen) Inc.

7.1.5. TEST RESULTS

Test Data

Model No.	SLP-B211BWUXWW	**RBW,VBW**	9 kHz
Environmental Conditions	22°C, 45% RH	**Test Mode**	Mode 1
Tested by	Evan Ai	**Line**	L1
Test Date	May 10, 2018	**Test Voltage**	AC 120V/60Hz

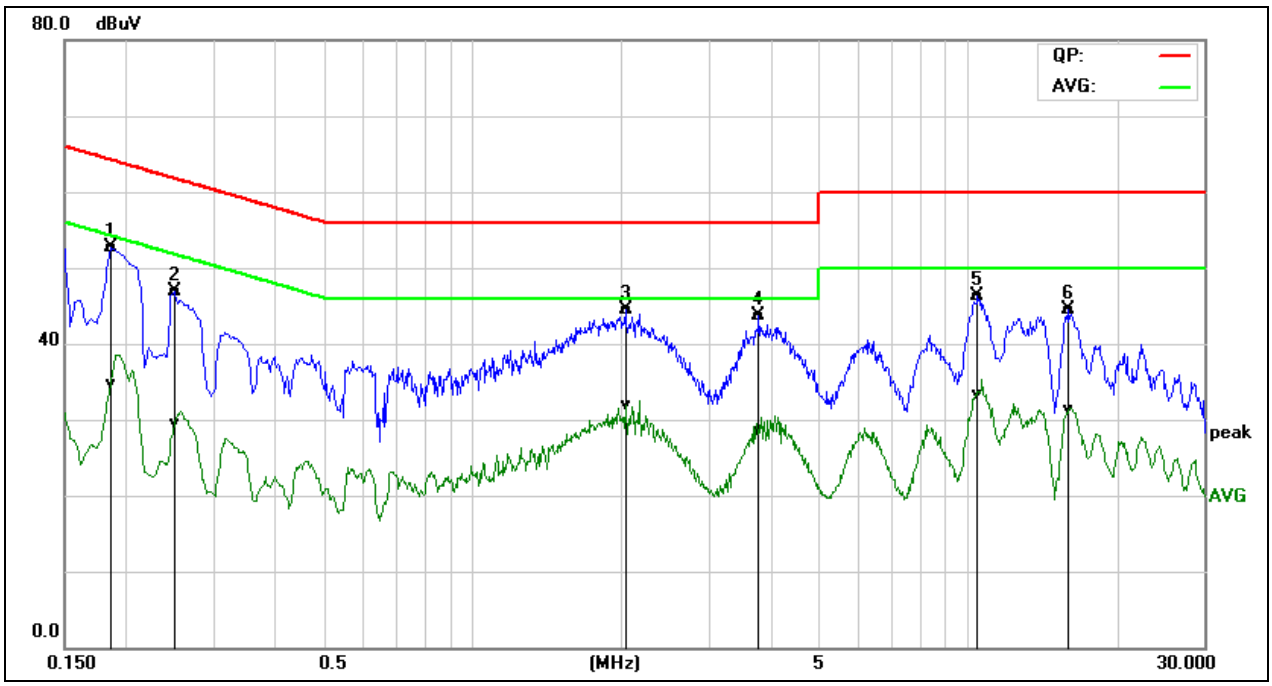

Frequency (MHz)	QuasiPeak Reading (dBuV)	Average Reading (dBuV)	Correction Factor (dB)	QuasiPeak Result (dBuV)	Average Result (dBuV)	QuasiPeak Limit (dBuV)	Average Limit (dBuV)	QuasiPeak Margin (dB)	Average Margin (dB)	Remark (Pass/Fail)
0.1860	33.17	15.14	19.63	52.80	34.77	64.21	54.21	-11.41	-19.44	Pass
0.2500	27.32	9.80	19.62	46.94	29.42	61.75	51.76	-14.81	-22.34	Pass
2.0380	24.70	12.21	19.72	44.42	31.93	56.00	46.00	-11.58	-14.07	Pass
3.7980	23.98	8.86	19.73	43.71	28.59	56.00	46.00	-12.29	-17.41	Pass
10.5020	26.07	13.12	20.14	46.21	33.26	60.00	50.00	-13.79	-16.74	Pass
16.0419	24.41	11.19	20.07	44.48	31.26	60.00	50.00	-15.52	-18.74	Pass

REMARKS: *L1 = Line One (Live Line)*

This report shall not be reproduced except in full, without the written approval of Compliance Certification Services (Shenzhen) Inc.

Model No.	SLP-B211BWUXWW	**RBW,VBW**	9 kHz
Environmental Conditions	22°C, 45% RH	**Test Mode**	Mode 1
Tested by	Evan Ai	**Line**	L2
Test Date	May 10, 2018	**Test Voltage**	AC 120V/60Hz

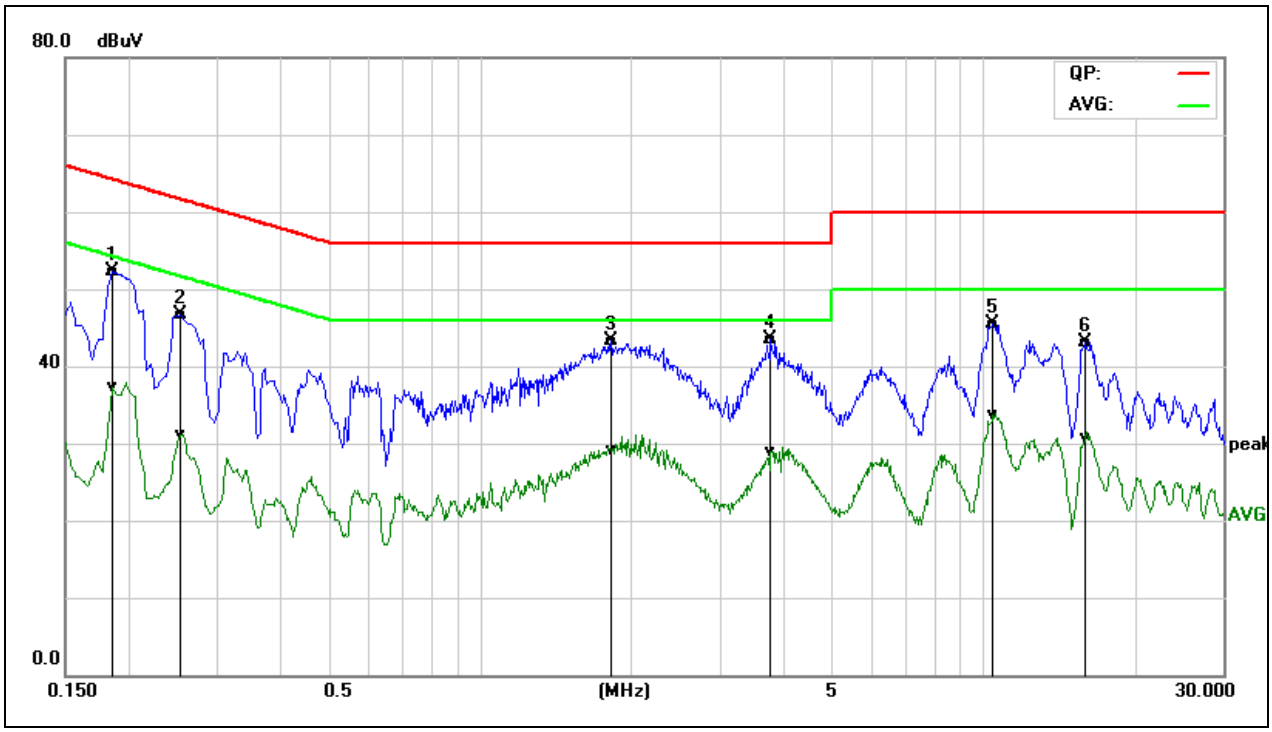

Frequency (MHz)	QuasiPeak Reading (dBuV)	Average Reading (dBuV)	Correction Factor (dB)	QuasiPeak Result (dBuV)	Average Result (dBuV)	QuasiPeak Limit (dBuV)	Average Limit (dBuV)	QuasiPeak Margin (dB)	Average Margin (dB)	Remark (Pass/Fail)
0.1860	32.71	17.75	19.53	52.24	37.28	64.21	54.21	-11.97	-16.93	Pass
0.2540	27.09	11.62	19.54	46.63	31.16	61.62	51.63	-14.99	-20.47	Pass
1.8220	23.53	9.41	19.69	43.22	29.10	56.00	46.00	-12.78	-16.90	Pass
3.7940	23.76	9.12	19.79	43.55	28.91	56.00	46.00	-12.45	-17.09	Pass
10.4860	25.44	13.56	20.14	45.58	33.70	60.00	50.00	-14.42	-16.30	Pass
16.0540	23.05	10.68	20.05	43.10	30.73	60.00	50.00	-16.90	-19.27	Pass

REMARKS: *L2 = Line Two (Neutral Line)*

This report shall not be reproduced except in full, without the written approval of Compliance Certification Services (Shenzhen) Inc.

7.2. SPURIOUS EMISSIONS MEASUREMENT

7.2.1. CONDUCTED EMISSIONS MEASUREMENT

7.2.1.1. LIMITS OF CONDUCTED EMISSIONS MEASUREMENT

According to §15.247(d), in any 100 kHz bandwidth outside the frequency bands in which the spread spectrum intentional radiator in operating, the radio frequency power that is produced by the intentional radiator shall be at least 20 dB below that in the 100 kHz bandwidth within the band that contains the highest level of the desired power, based on either an RF conducted or a radiated measurement, provided the transmitter demonstrates compliance with the peak conducted power limits. In addition, radiated emissions which fall in the restricted bands, as defined in §15.205(a), must also comply with the radiated emission limits specified in 15.209(a) (see Section 15.205(c)).

7.2.1.2. TEST PROCEDURE (please refer to measurement standard)

Conducted RF measurements of the transmitter output were made to confirm that the EUT antenna port conducted emissions meet the specified limit and to identify any spurious signals that require further investigation or measurements on the radiated emissions site.
The transmitter output is connected to the spectrum analyzer. The resolution bandwidth is set to 100 kHz. The video bandwidth is set to 300 kHz.
Measurements are made over the 9kHz to 26.5GHz range with the transmitter set to the lowest, middle, and highest channels. No emission found between lowest internal used/generated frequency to 10MHz，it is only recorded 10MHz to 26GHz.

This report shall not be reproduced except in full, without the written approval of Compliance Certification Services (Shenzhen) Inc.

7.2.1.3. TEST RESULTS

Test Plot

CH Low (10MHz ~26.5GHz)

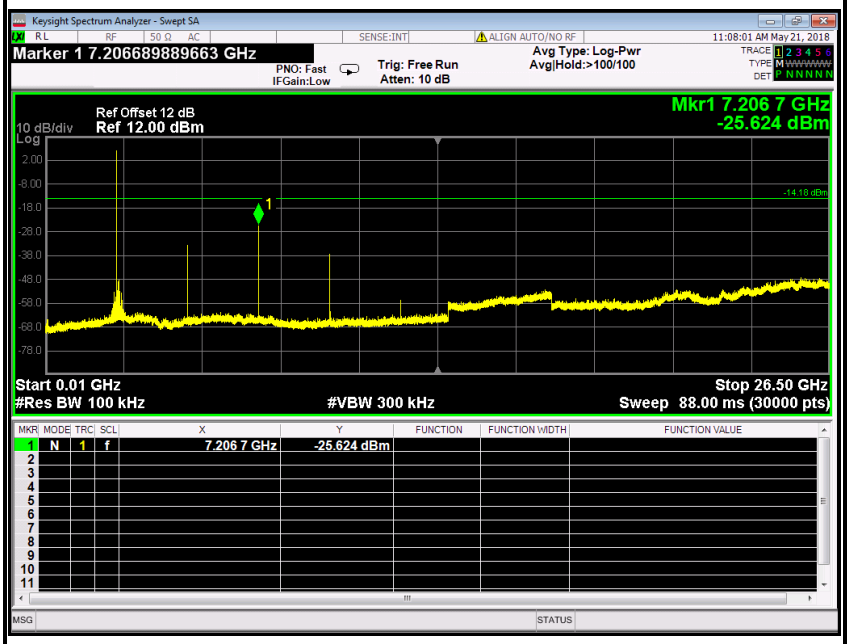

CH Low (2.31GHz ~2.41GHz)

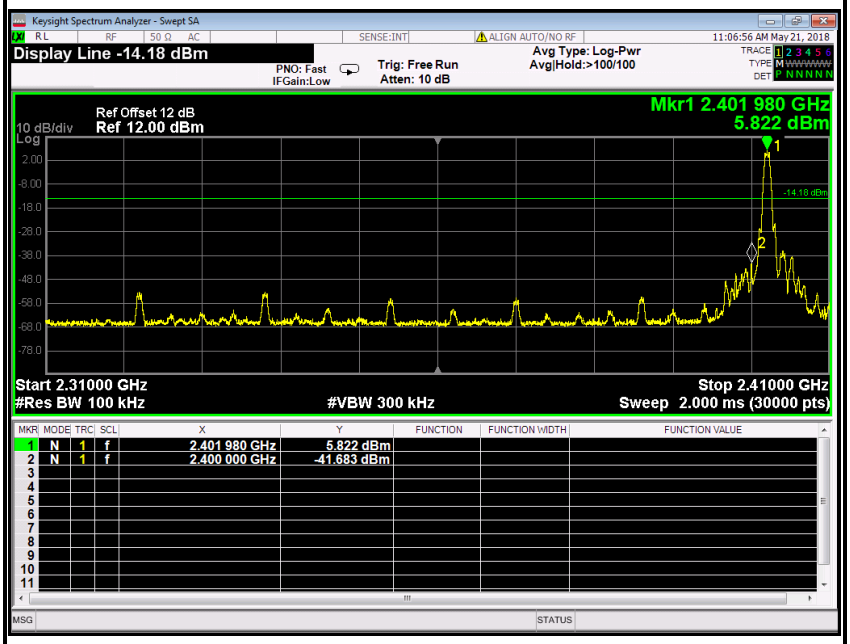

This report shall not be reproduced except in full, without the written approval of Compliance Certification Services (Shenzhen) Inc.

CH Mid (10MHz ~26.5GHz)

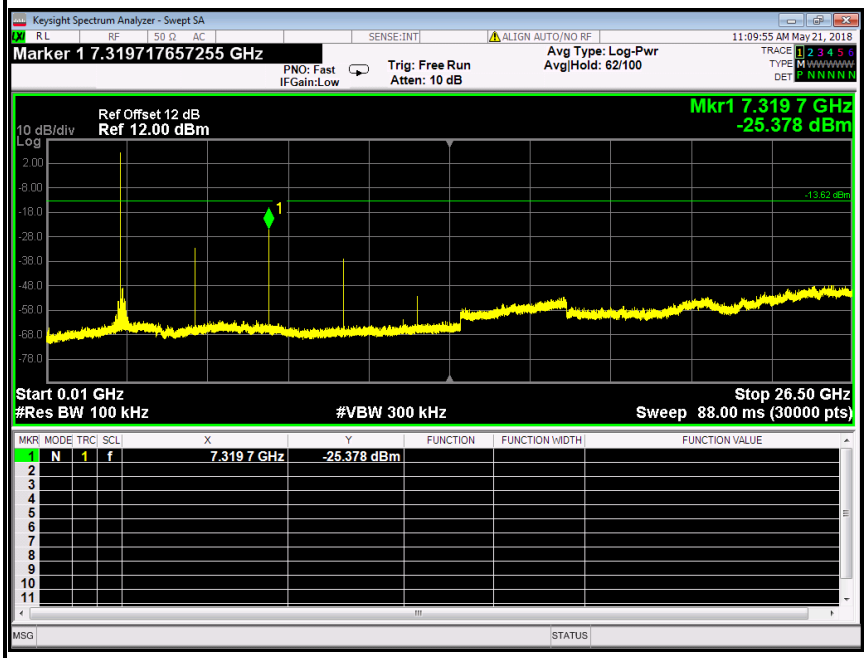

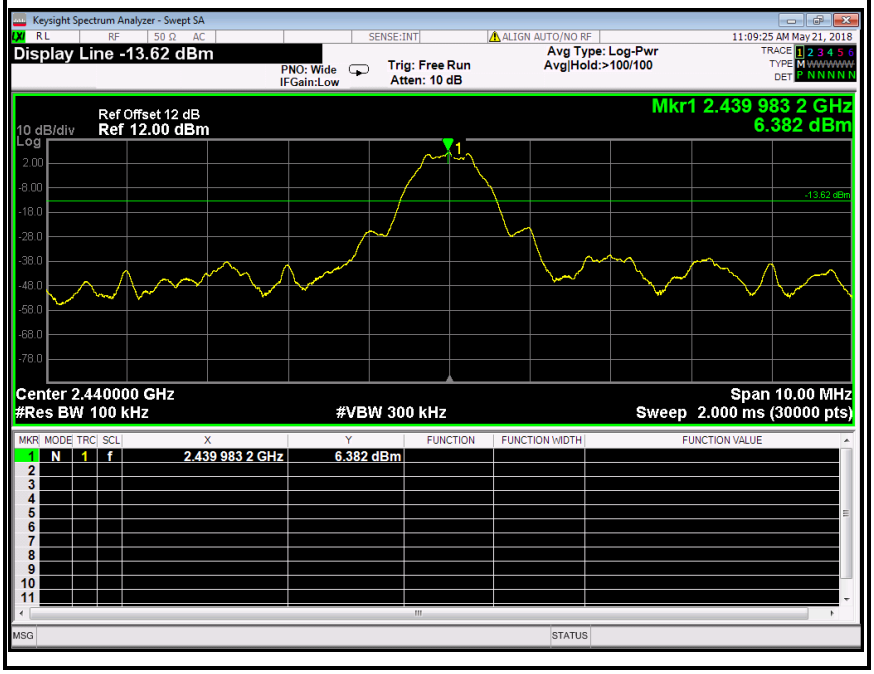

This report shall not be reproduced except in full, without the written approval of Compliance Certification Services (Shenzhen) Inc.

CH High (10MHz ~26.5GHz)

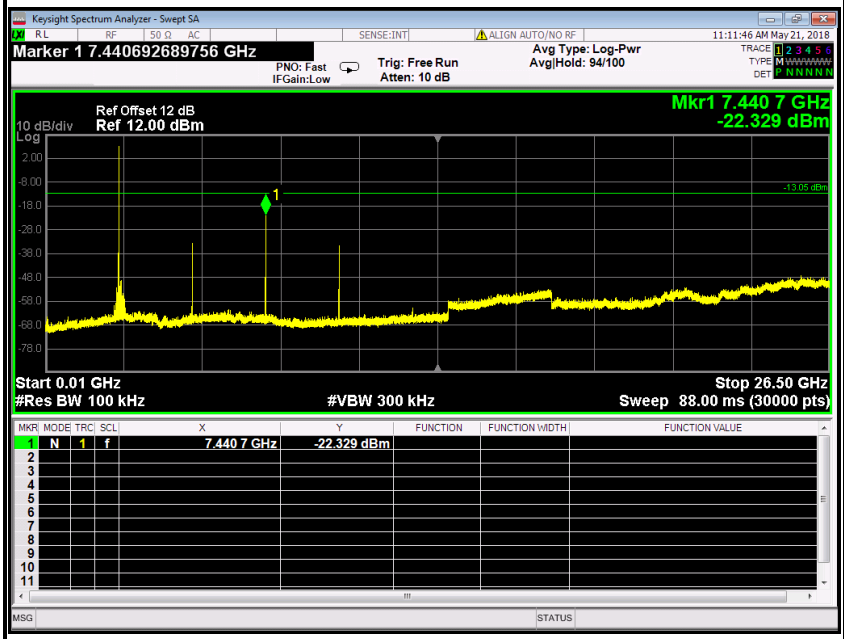

CH High(2.475GHz ~2.5GHz)

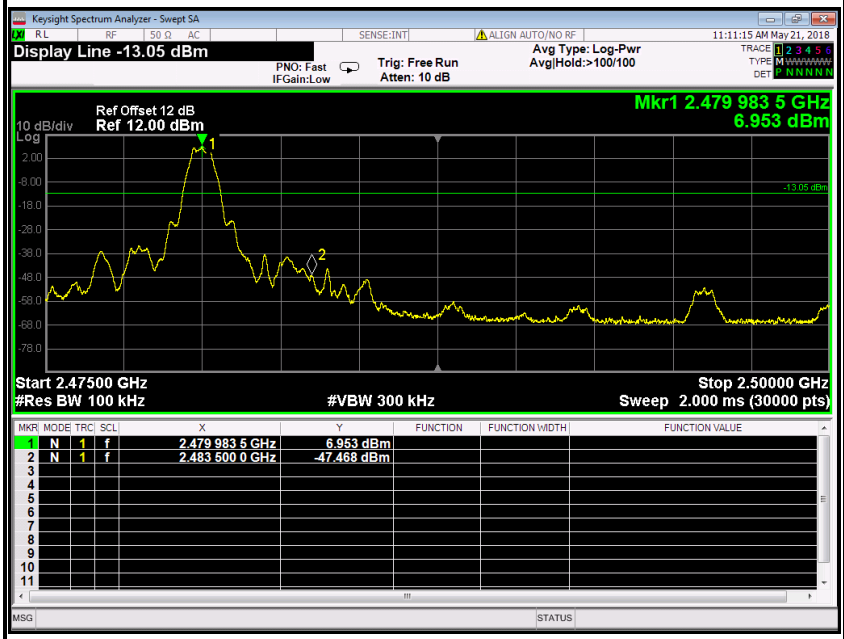

This report shall not be reproduced except in full, without the written approval of Compliance Certification Services (Shenzhen) Inc.

7.2.2. RADIATED EMISSIONS MEASUREMENT

7.2.2.1. LIMITS OF RADIATED EMISSIONS MEASUREMENT

According to §15.209(a), except as provided elsewhere in this Subpart, the emissions from an intentional radiator shall not exceed the field strength levels specified in the following table:

Frequency (MHz)	Field Strength (mV/m)	Measurement Distance (m)
0.009-0.490	2400/F(kHz)	300
0.490-1.705	24000/F(kHz)	30
1.705-30.0	30	30
30-88	100*	3
88-216	150*	3
216-960	200*	3
Above 960	500	3

Remark: Except as provided in paragraph (g), fundamental emissions from intentional radiators operating under this Section shall not be located in the frequency bands 54-72 MHz, 76-88 MHz, 174-216 MHz or 470-806 MHz. However, operation within these frequency bands is permitted under other sections of this Part, e.g., Sections 15.231 and 15.241.

1. In the emission table above, the tighter limit applies at the band edges.

Frequency (MHz)	Field Strength (μV/m at 3-meter)	Field Strength (dBμV/m at 3-meter)
30-88	100	40
88-216	150	43.5
216-960	200	46
Above 960	500	54

NOTE: (1) The lower limit shall apply at the transition frequencies.

(2) Emission level (dBuV/m) = 20 log Emission level (uV/m).

This report shall not be reproduced except in full, without the written approval of Compliance Certification Services (Shenzhen) Inc.

7.2.2.2. Measuring Instruments and Setting

The following table is the setting of spectrum analyzer and receiver.

Spectrum Parameter	Setting
Attenuation	Auto
Start Frequency	1000 MHz
Stop Frequency	10th carrier harmonic
RB / VB (Emission in restricted band)	1MHz / 1MHz for Peak, 1 MHz / 1/ T for Average
RB / VB (Emission in non-restricted band)	1MHz / 1MHz for Peak, 1 MHz / 1/ T for Average

Receiver Parameter	Setting
Attenuation	Auto
Start ~ Stop Frequency	9kHz~150kHz / RB 200Hz for QP/AVG
Start ~ Stop Frequency	150kHz~30MHz / RB 9kHz for QP/AVG
Start ~ Stop Frequency	30MHz~1000MHz / RB 100kHz for QP

7.2.2.3. TEST PROCEDURE (please refer to measurement standard)

1) Sequence of testing 9 kHz to 30 MHz

Setup:

--- The equipment was set up to simulate a typical usage like described in the user manual or described by manufacturer.

--- If the EUT is a tabletop system, a rotatable table with 0.8 m height is used.

--- If the EUT is a floor standing device, it is placed on the ground.

--- Auxiliary equipment and cables were positioned to simulate normal operation conditions.

--- The AC power port of the EUT (if available) is connected to a power outlet below the turntable.

--- The measurement distance is 3 meter.

--- The EUT was set into operation.

Pre measurement:

--- The turntable rotates from 0° to 315° using 45° steps.

--- The antenna height is 0.8 meter.

--- At each turntable position the analyzer sweeps with peak detection to find the

This report shall not be reproduced except in full, without the written approval of Compliance Certification Services (Shenzhen) Inc.

maximum of all emissions

Final measurement:

--- Identified emissions during the pre measurement the software maximizes by rotating the turntable position (0° to 360°) and by rotating the elevation axes (0° to 360°).

--- The final measurement will be done in the position (turntable and elevation) causing the highest emissions with QPK detector.

--- The final levels, frequency, measuring time, bandwidth, turntable position, correction factor, margin to the limit and limit will be recorded. Also a plot with the graph of the pre measurement and the limit will be stored.

2) Sequence of testing 30 MHz to 1 GHz

Setup:

--- The equipment was set up to simulate a typical usage like described in the user manual or described by manufacturer.

--- If the EUT is a tabletop system, a table with 0.8 m height is used, which is placed on the ground plane.

--- If the EUT is a floor standing device, it is placed on the ground plane with insulation between both.

--- Auxiliary equipment and cables were positioned to simulate normal operation conditions

--- The AC power port of the EUT (if available) is connected to a power outlet below the turntable.

--- The measurement distance is 3 meter.

--- The EUT was set into operation.

Pre measurement:

--- The turntable rotates from 0° to 315° using 45° steps.

--- The antenna is polarized vertical and horizontal.

--- The antenna height changes from 1 to 3 meter.

--- At each turntable position, antenna polarization and height the analyzer sweeps three times in peak to find the maximum of all emissions.

This report shall not be reproduced except in full, without the written approval of Compliance Certification Services (Shenzhen) Inc.

Final measurement:

--- The final measurement will be performed with minimum the six highest peaks.

--- According to the maximum antenna and turntable positions of premeasurement the software maximize the peaks by changing turntable position (± 45°) and antenna movement between 1 and 4 meter.

--- The final measurement will be done with QP detector with an EMI receiver.

--- The final levels, frequency, measuring time, bandwidth, antenna height, antenna polarization, turntable angle, correction factor, margin to the limit and limit will be recorded. Also a plot with the graph of the premeasurement with marked maximum final measurements and the limit will be stored.

3) Sequence of testing 1 GHz to 18 GHz

Setup:

--- The equipment was set up to simulate a typical usage like described in the user manual or described by manufacturer.

--- If the EUT is a tabletop system, a rotatable table with 1.5 m height is used.

--- If the EUT is a floor standing device, it is placed on the ground plane with insulation between both.

--- Auxiliary equipment and cables were positioned to simulate normal operation conditions

--- The AC power port of the EUT (if available) is connected to a power outlet below the turntable.

--- The measurement distance is 3 meter.

--- The EUT was set into operation.

Pre measurement:

--- The turntable rotates from 0° to 315° using 45° steps.

--- The antenna is polarized vertical and horizontal.

--- The antenna height scan range is 1 meter to 2.5 meter.

--- At each turntable position and antenna polarization the analyzer sweeps with peak detection to find the maximum of all emissions.

This report shall not be reproduced except in full, without the written approval of Compliance Certification Services (Shenzhen) Inc.

Final measurement:

--- The final measurement will be performed with minimum the six highest peaks.

--- According to the maximum antenna and turntable positions of premeasurement the software maximize the peaks by changing turntable position (± 45°) and antenna movement between 1 and 4 meter. This procedure is repeated for both antenna polarizations.

--- The final measurement will be done in the position (turntable, EUT-table and antenna polarization) causing the highest emissions with Peak and Average detector.

--- The final levels, frequency, measuring time, bandwidth, turntable position, EUT-table position, antenna polarization, correction factor, margin to the limit and limit will be recorded. Also a plot with the graph of the pre measurement with marked maximum final measurements and the limit will be stored.

4) Sequence of testing above 18 GHz
Setup:

--- The equipment was set up to simulate a typical usage like described in the user manual or described by manufacturer.

--- If the EUT is a tabletop system, a rotatable table with 1.5 m height is used.

--- If the EUT is a floor standing device, it is placed on the ground plane with insulation between both.

--- Auxiliary equipment and cables were positioned to simulate normal operation conditions

--- The AC power port of the EUT (if available) is connected to a power outlet below the turntable.

--- The measurement distance is 1 meter.

--- The EUT was set into operation.

Pre measurement:

--- The antenna is moved spherical over the EUT in different polarisations of the antenna.

Final measurement:

--- The final measurement will be performed at the position and antenna orientation for all detected emissions that were found during the premeasurements with Peak and Average detector.

--- The final levels, frequency, measuring time, bandwidth, correction factor, margin to the limit and limit will be recorded. Also a plot with the graph of the premeasurement and the limit will be stored.

This report shall not be reproduced except in full, without the written approval of Compliance Certification Services (Shenzhen) Inc.

7.2.2.4. TEST SETUP

Below 30MHz

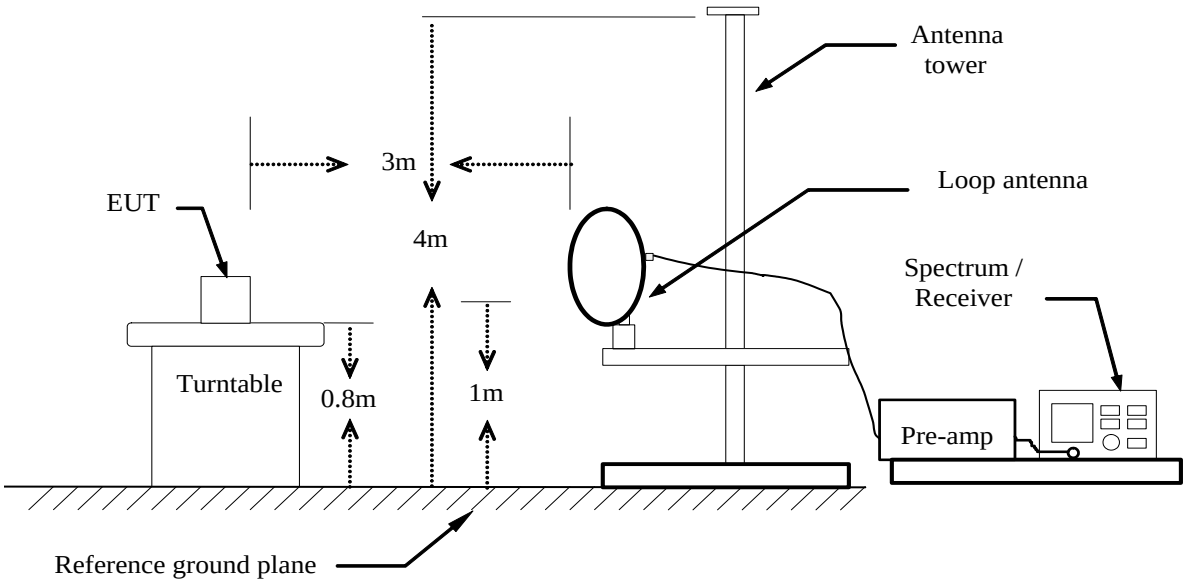

Below 1 GHz

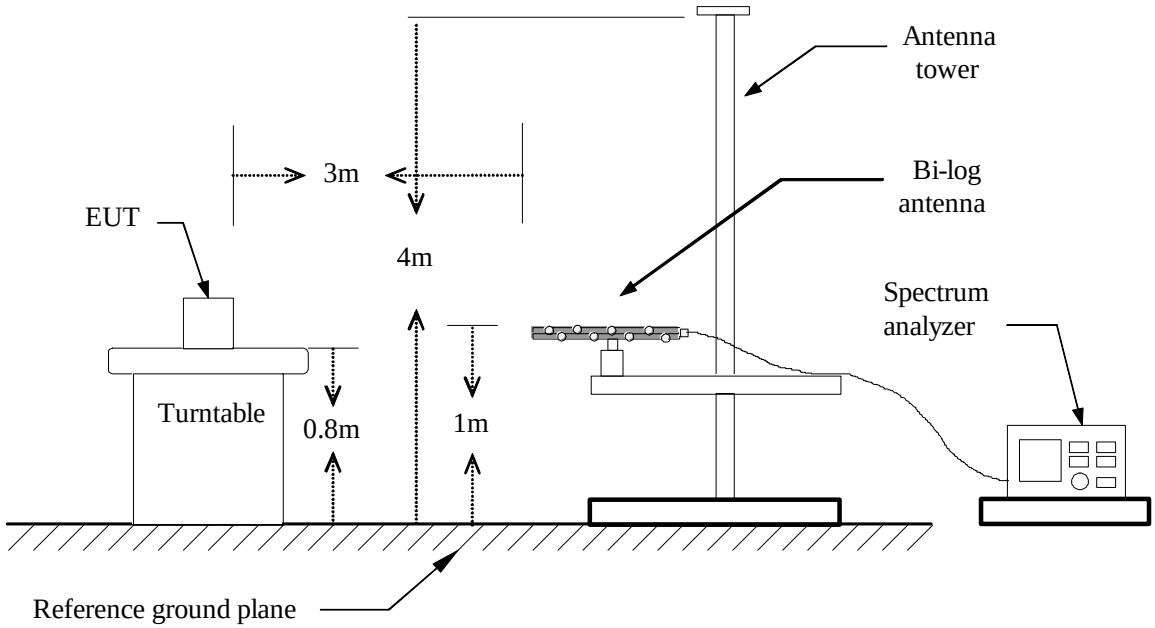

This report shall not be reproduced except in full, without the written approval of Compliance Certification Services (Shenzhen) Inc.

Above 1 GHz

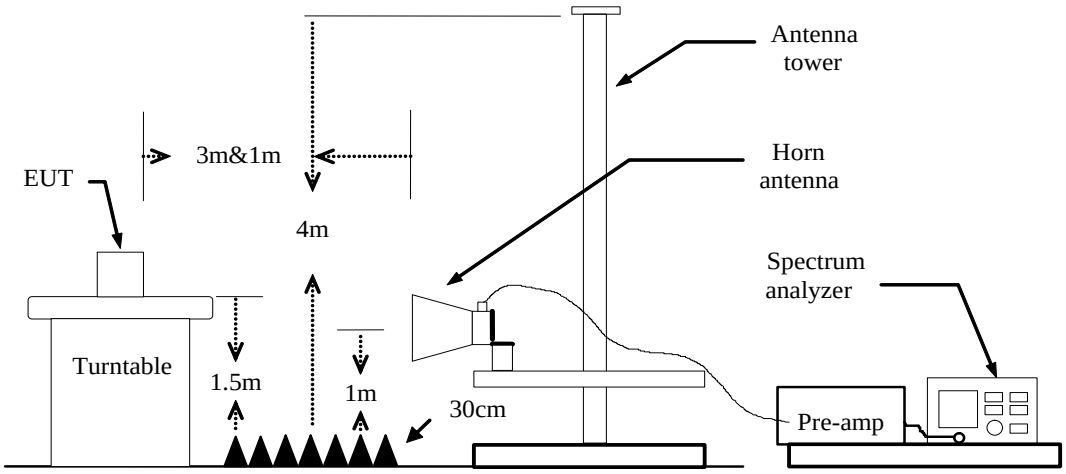

For the actual test configuration, please refer to the related item – Photographs of the Test Configuration.

This report shall not be reproduced except in full, without the written approval of Compliance Certification Services (Shenzhen) Inc.

7.2.2.5. DATA SAMPLE

Below 1GHz

Frequency (MHz)	Reading (dBuV)	Correct Factor (dB/m)	Result (dBuV/m)	Limit (dBuV/m)	Margin (dB)	Antenna Pole (V/H)	Remark
XXX.XXXX	53.41	-18.63	34.78	43.50	-8.72	V	QP

Frequency (MHz) = Emission frequency in MHz
Reading (dBuV) = Uncorrected Analyzer / Receiver reading
Correct Factor (dB/m) = Antenna factor + Cable loss – Amplifier gain
Result (dBuV/m) = Reading (dBuV) + Corr. Factor (dB/m)
Limit (dBuV/m) = Limit stated in standard
Margin (dB) = Result (dBuV/m) – Limit (dBuV/m)
Q.P. = Quasi-peak Reading

Above 1GHz

Frequency (MHz)	Reading (dBuV)	Correction Factor (dB/m)	Result (dBuV/m)	Limit (dBuV/m)	Margin (dB)	Antenna Pole (V/H)	Remark
XXXX.XXXX	62.09	-11.42	50.67	74.00	-23.33	V	Peak
XXXX.XXXX	49.78	-11.42	38.36	54.00	-15.64	V	AVG

Frequency (MHz) = Emission frequency in MHz
Reading (dBuV) = Uncorrected Analyzer / Receiver reading
Correction Factor (dB/m) = Antenna factor + Cable loss – Amplifier gain
Result (dBuV/m) = Reading (dBuV) + Corr. Factor (dB/m)
Limit (dBuV/m) = Limit stated in standard
Margin (dB) = Result (dBuV/m) – Limit (dBuV/m)
Peak = Peak Reading
AVG = Average Reading

Calculation Formula

Margin (dB) = Result (dBuV/m) – Limits (dBuV/m)
Result (dBuV/m) = Reading (dBuV) + Correction Factor

This report shall not be reproduced except in full, without the written approval of Compliance Certification Services (Shenzhen) Inc.

7.2.2.6. TEST RESULTS

Below 1 GHz

Test Mode: TX **Tested by:** Fade Zhong

Ambient temperature: 24°C **Relative humidity:** 52% RH **Date:** May 13, 2018

Frequency (MHz)	Reading (dBuV)	Correction Factor (dB/m)	Result (dBuV/m)	Limit (dBuV/m)	Margin (dB)	Antenna Pole (V/H)	Remark
92.0800	48.46	-24.52	23.94	43.50	-19.56	V	QP
192.9600	52.74	-22.82	29.92	43.50	-13.58	V	QP
245.3400	48.07	-21.28	26.79	46.00	-19.21	V	QP
485.9000	38.40	-14.36	24.04	46.00	-21.96	V	QP
572.2300	46.42	-13.04	33.38	46.00	-12.62	V	QP
708.0300	36.81	-11.91	24.90	46.00	-21.10	V	QP
192.9600	49.17	-22.82	26.35	43.50	-17.15	H	QP
263.7700	44.99	-20.13	24.86	46.00	-21.14	H	QP
412.1800	38.92	-15.57	23.35	46.00	-22.65	H	QP
486.8700	40.44	-14.36	26.08	46.00	-19.92	H	QP
579.9900	47.61	-13.11	34.50	46.00	-11.50	H	QP
721.6100	42.93	-11.82	31.11	46.00	-14.89	H	QP

Notes:

1. No emission found between lowest internal used/generated frequency to 30MHz.
2. Pre-scan all mode and recorded the worst case results in this report (BT LE (Low Channel)

Remark:

1. Radiated emissions measured in frequency range from 9 kHz to 1GHz were made with an instrument using Quasi-peak detector mode.
2. Data of measurement within this frequency range shown "---" in the table above means the reading of emissions are attenuated more than 20dB below the permissible limits or the field strength is too small to be measured.
3. The IF bandwidth of Receiver between 30MHz to 1GHz was 120 kHz.
4. Frequency (MHz). = Emission frequency in MHz
   Reading (dBμV/m) = Receiver reading
   Correction Factor (dB) = Antenna factor + Cable loss – Amplifier gain
   Limit (dBμV/m) = Limit stated in standard
   Margin (dB) = Measured (dBμV/m) – Limits (dBμV/m)
   Antenna Pol e (H/V) = Current carrying line of reading

This report shall not be reproduced except in full, without the written approval of Compliance Certification Services (Shenzhen) Inc.

Vertical

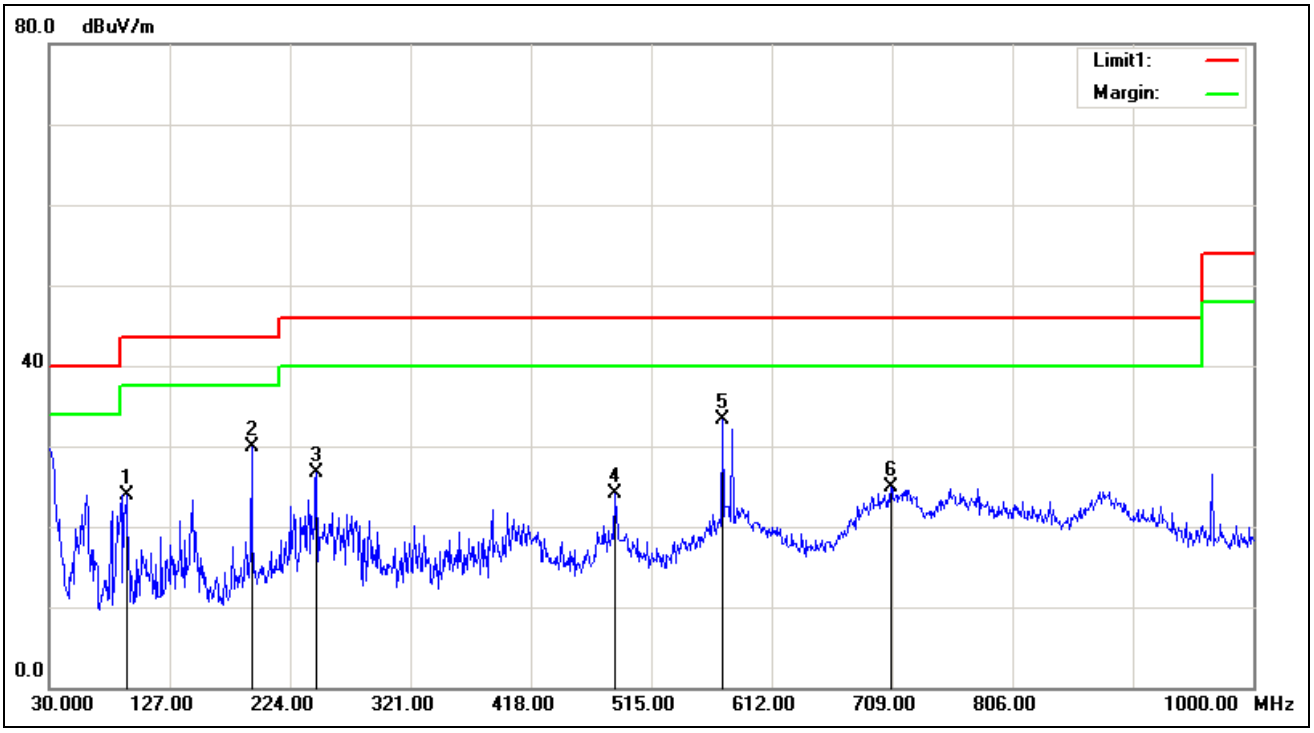

Horizontal

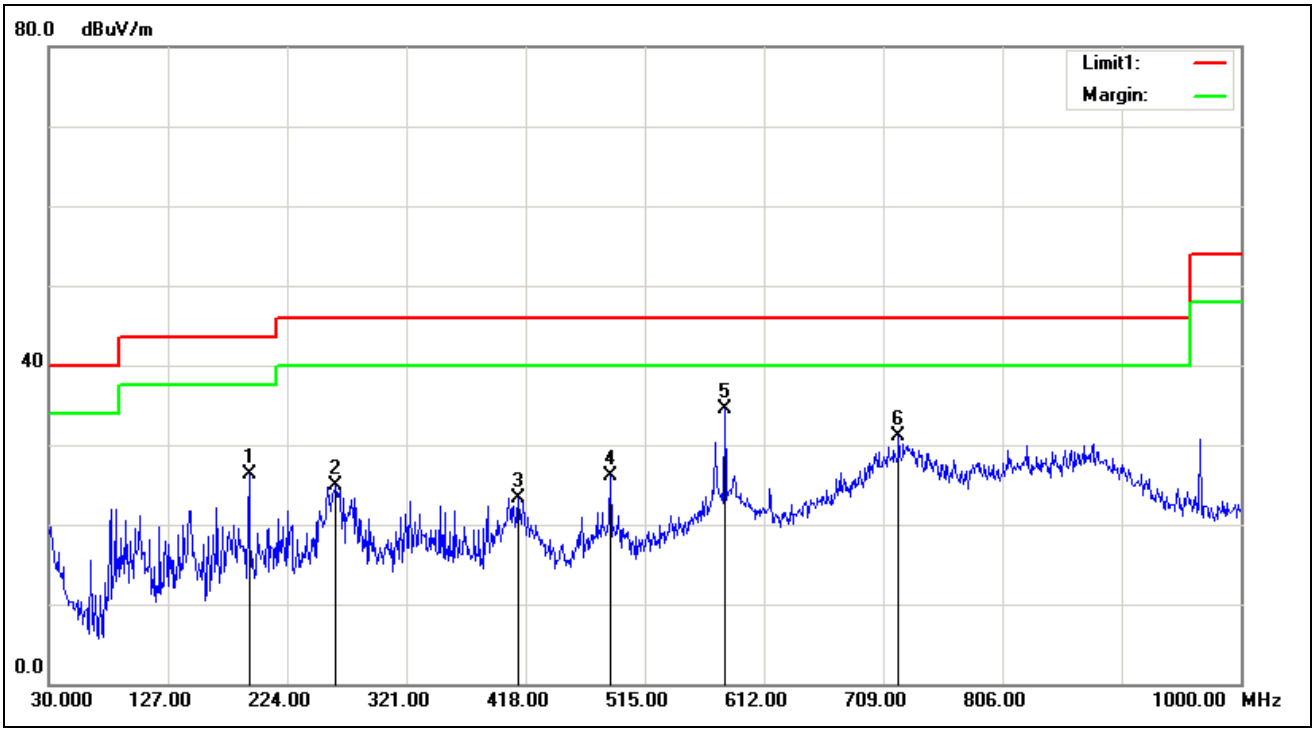

This report shall not be reproduced except in full, without the written approval of Compliance Certification Services (Shenzhen) Inc.

Above 1 GHz

Test Mode: GFSK (CH Low) **Tested by:** Fade Zhong

Ambient temperature: 24°C **Relative humidity:** 52% RH **Date:** May 13, 2018

Frequency (MHz)	Reading (dBμV)	Correction Factor (dB/m)	Result (dBμV/m)	Limit (dBμV/m)	Margin (dB)	Antenna Pole (V/H)	Remark
1792.000	48.41	-6.29	42.12	74.00	-31.88	V	peak
2629.000	45.78	-2.03	43.75	74.00	-30.25	V	peak
4303.000	43.46	2.66	46.12	74.00	-27.88	V	peak
4852.000	44.34	4.50	48.84	74.00	-25.16	V	peak
5707.000	42.33	5.96	48.29	74.00	-25.71	V	peak
7678.000	41.97	9.02	50.99	74.00	-23.01	V	peak
2665.000	46.88	-1.96	44.92	74.00	-29.08	H	peak
4132.000	42.57	2.05	44.62	74.00	-29.38	H	peak
4807.000	48.34	4.35	52.69	74.00	-21.31	H	peak
4915.000	47.20	4.70	51.90	74.00	-22.10	H	peak
6319.000	42.00	6.60	48.60	74.00	-25.40	H	peak
7273.000	41.41	8.23	49.64	74.00	-24.36	H	peak

Remark:

1. Measuring frequencies from 1 GHz to the 10th harmonic of highest fundamental frequency.
2. Radiated emissions measured in frequency above 1000MHz were made with an instrument using peak/average detector mode.
3. Average test would be performed if the peak result were greater than the average limit or as required by the applicant.
4. Data of measurement within this frequency range shown " --- " in the table above means the reading of emissions are attenuated more than 20dB below the permissible limits or the field strength is too small to be measured.
5. Measurements above show only up to 6 maximum emissions noted, or would be lesser, with " N/A " remark, if no specific emissions from the EUT are recorded (ie: margin>20dB from the applicable limit) and considered that's already beyond the background noise floor.
6. Margin (dB) = Remark result (dBuV/m) – Average limit (dBuV/m).

This report shall not be reproduced except in full, without the written approval of Compliance Certification Services (Shenzhen) Inc.

Test Mode: GFSK (CH Mid) **Tested by:** Fade Zhong

Ambient temperature: 24°C **Relative humidity:** 52% RH **Date:** May 13, 2018

Frequency (MHz)	Reading (dBμV)	Correction Factor (dB/m)	Result (dBμV/m)	Limit (dBμV/m)	Margin (dB)	Antenna Pole (V/H)	Remark
1603.000	50.79	-6.69	44.10	74.00	-29.90	V	peak
2665.000	46.06	-1.96	44.10	74.00	-29.90	V	peak
3718.000	43.65	0.40	44.05	74.00	-29.95	V	peak
4915.000	45.54	4.70	50.24	74.00	-23.76	V	peak
6724.000	42.47	7.25	49.72	74.00	-24.28	V	peak
8065.000	42.42	9.61	52.03	74.00	-21.97	V	peak
2251.000	45.20	-3.62	41.58	74.00	-32.42	H	peak
2629.000	46.04	-2.03	44.01	74.00	-29.99	H	peak
3844.000	43.12	0.93	44.05	74.00	-29.95	H	peak
4879.000	49.56	4.59	54.15	74.00	-19.85	H	peak
4879.000	46.98	4.59	51.57	54.00	-2.43	H	AVG
5581.000	42.54	5.90	48.44	74.00	-25.56	H	peak
7246.000	41.69	8.18	49.87	74.00	-24.13	H	peak

Remark:

1. Measuring frequencies from 1 GHz to the 10th harmonic of highest fundamental frequency.
2. Radiated emissions measured in frequency above 1000MHz were made with an instrument using peak/average detector mode.
3. Average test would be performed if the peak result were greater than the average limit or as required by the applicant.
4. Data of measurement within this frequency range shown " --- " in the table above means the reading of emissions are attenuated more than 20dB below the permissible limits or the field strength is too small to be measured.
5. Measurements above show only up to 6 maximum emissions noted, or would be lesser, with " N/A " remark, if no specific emissions from the EUT are recorded (ie: margin>20dB from the applicable limit) and considered that's already beyond the background noise floor.
6. Margin (dB) = Remark result (dBuV/m) – Average limit (dBuV/m).

This report shall not be reproduced except in full, without the written approval of Compliance Certification Services (Shenzhen) Inc.

Test Mode: GFSK (CH High) **Tested by:** Fade Zhong

Ambient temperature: 24°C **Relative humidity:** 52% RH **Date:** May 13, 2018

Frequency (MHz)	Reading (dBμV)	Correction Factor (dB/m)	Result (dBμV/m)	Limit (dBμV/m)	Margin (dB)	Antenna Pole (V/H)	Remark
1594.000	48.63	-6.71	41.92	74.00	-32.08	V	peak
2665.000	47.13	-1.96	45.17	74.00	-28.83	V	peak
4339.000	42.05	2.78	44.83	74.00	-29.17	V	peak
4852.000	43.69	4.50	48.19	74.00	-25.81	V	peak
5590.000	42.22	5.91	48.13	74.00	-25.87	V	peak
7372.000	44.82	8.43	53.25	74.00	-20.75	V	peak
7372.000	42.10	8.43	50.53	54.00	-3.47	V	AVG
2638.000	46.81	-2.01	44.80	74.00	-29.20	H	peak
3367.000	44.01	-0.74	43.27	74.00	-30.73	H	peak
4303.000	43.41	2.66	46.07	74.00	-27.93	H	peak
5617.000	41.77	5.92	47.69	74.00	-26.31	H	peak
6616.000	41.44	7.08	48.52	74.00	-25.48	H	peak
8281.000	41.57	9.50	51.07	74.00	-22.93	H	peak

Remark:

1. Measuring frequencies from 1 GHz to the 10th harmonic of highest fundamental frequency.
2. Radiated emissions measured in frequency above 1000MHz were made with an instrument using peak/average detector mode.
3. Average test would be performed if the peak result were greater than the average limit or as required by the applicant.
4. Data of measurement within this frequency range shown " --- " in the table above means the reading of emissions are attenuated more than 20dB below the permissible limits or the field strength is too small to be measured.
5. Measurements above show only up to 6 maximum emissions noted, or would be lesser, with " N/A " remark, if no specific emissions from the EUT are recorded (ie: margin>20dB from the applicable limit) and considered that's already beyond the background noise floor.
6. Margin (dB) = Remark result (dBuV/m) – Average limit (dBuV/m).

This report shall not be reproduced except in full, without the written approval of Compliance Certification Services (Shenzhen) Inc.

7.3. 6dB BANDWIDTH MEASUREMENT

7.3.1. LIMITS

According to §15.247(a)(2), systems using digital modulation techniques may operate in the 902 - 928 MHz, 2400 - 2483.5MHz. The minimum 6 dB bandwidth shall be at least 500 kHz.

7.3.2. TEST PROCEDURES (please refer to measurement standard)

8.1 Option 2:

The automatic bandwidth measurement capability of an instrument may be employed using the X dB bandwidth mode with X set to 6 dB, if the functionality described above (i.e., RBW = 100 kHz, VBW ≥ 3 RBW, peak detector with maximum hold) is implemented by the instrumentation function. When using this capability, care shall be taken so that the bandwidth measurement is not influenced by any intermediate power nulls in the fundamental emission that might be ≥ 6 dB.

7.3.3. TEST SETUP

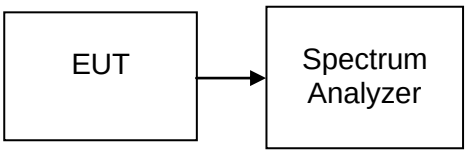

7.3.4. TEST RESULTS

No non-compliance noted

Test Data

Channel	Frequency (MHz)	Bandwidth (kHz)	Limit (kHz)	Margin (kHz)
Low	2402	685.3	>500	PASS
Mid	2440	679.7		PASS
High	2480	722.8		PASS

This report shall not be reproduced except in full, without the written approval of Compliance Certification Services (Shenzhen) Inc.

Test Plot

6dB Bandwidth (CH Low)

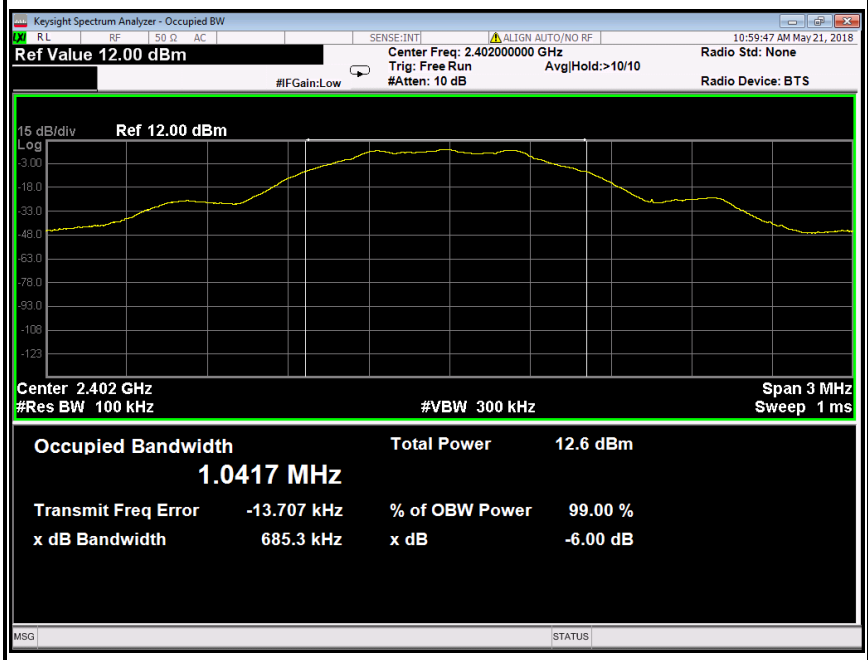

6dB Bandwidth (CH Mid)

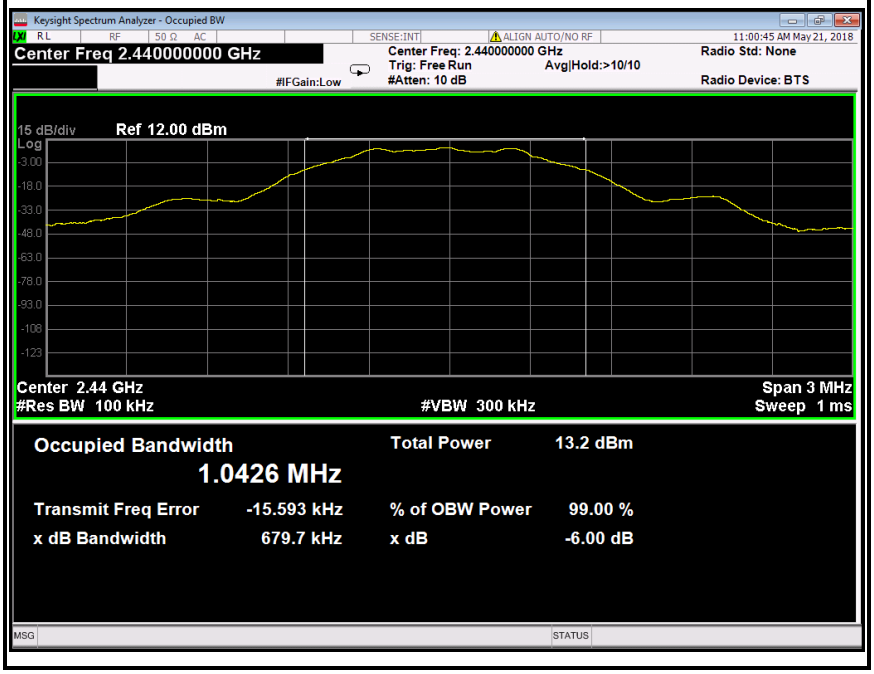

This report shall not be reproduced except in full, without the written approval of Compliance Certification Services (Shenzhen) Inc.

6dB Bandwidth (CH High)

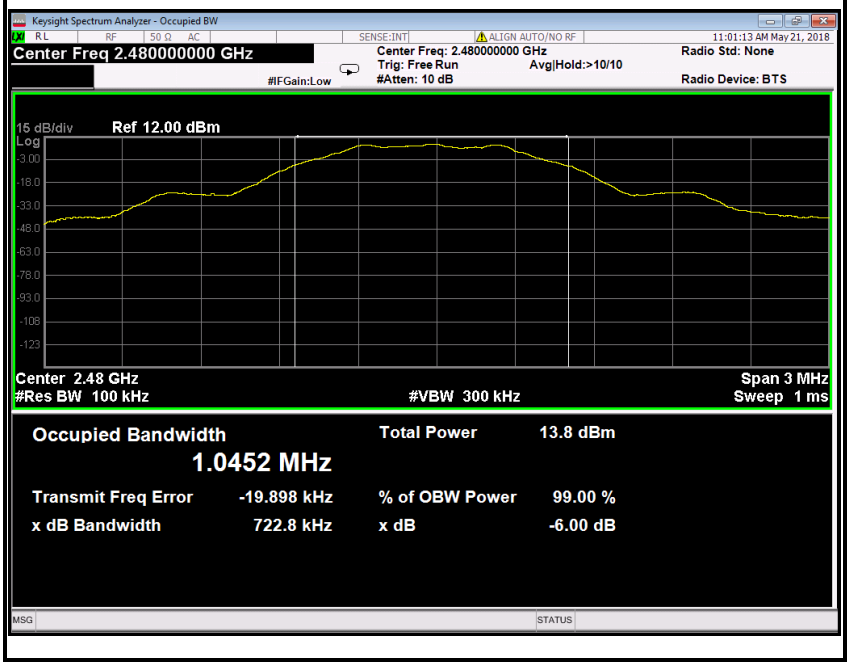

This report shall not be reproduced except in full, without the written approval of Compliance Certification Services (Shenzhen) Inc.

7.4. ANTENNA GAIN

MEASUREMENT

The antenna gain of the complete system is calculated by the difference of radiated power in EIRP and the conducted power of the module.

MEASUREMENT PARAMETERS

Measurement parameter	
Detector	Peak
Sweep time	Auto
Resolution bandwidth	3 MHz
Video bandwidth	3 MHz
Trace-Mode	Max hold

LIMITS

FCC	IC
Antenna Gain	
6 dBi	

TEST RESULTS

GFSK

T_{nom}	V_{nom}	Lowest channel 2402MHz	Middle channel 2440MHz	Highest channel 2480MHz
Conducted power [dBm] Measured with GFSK modulation		3.88	4.25	4.60
Radiated power [dBm] Measured with GFSK modulation		5.67	6.08	6.49
Gain [dBi] Calculated		1.79	1.83	1.89
Measurement uncertainty		± 1.5 dB (cond.) / ± 3 dB (rad.)		

This report shall not be reproduced except in full, without the written approval of Compliance Certification Services (Shenzhen) Inc.

7.5. PEAK OUTPUT POWER

7.5.1. LIMITS

The maximum peak output power of the intentional radiator shall not exceed the following:

1. According to §15.247(b)(3), for systems using digital modulation in the bands of 902-928 MHz, 2400-2483.5 MHz: 1 Watt.
2. According to §15.247(b)(4), the conducted output power limit specified in paragraph (b) of this section is based on the use of antennas with directional gains that do not exceed 6 dBi. Except as shown in paragraph (c) of this section, if transmitting antennas of directional gain greater than 6 dBi are used, the conducted output power from the intentional radiator shall be reduced below the stated values in paragraphs (b)(1), (b)(2), and (b)(3) of this section, as appropriate, by the amount in dB that the directional gain of the antenna exceeds 6 dBi.

7.5.2. TEST PROCEDURES (please refer to measurement standard)

9.1.1 RBW ≥ *DTS bandwidth*

This procedure shall be used when the measurement instrument has available a resolution bandwidth that is greater than the *DTS bandwidth*.
a) Set the RBW ≥ *DTS bandwidth*.
b) Set VBW ≥ 3 RBW.
c) Set span ≥ 3 x RBW
d) Sweep time = auto couple.
e) Detector = peak.
f) Trace mode = max hold.
g) Allow trace to fully stabilize.
h) Use peak marker function to determine the peak amplitude level.

9.1.2 PKPM1 Peak power meter method

The maximum peak conducted output power may be measured using a broadband peak RF power meter. The power meter shall have a video bandwidth that is greater than or equal to the DTS bandwidth and shall utilize a fast-responding diode detector.

This report shall not be reproduced except in full, without the written approval of Compliance Certification Services (Shenzhen) Inc.

7.5.3. TEST SETUP

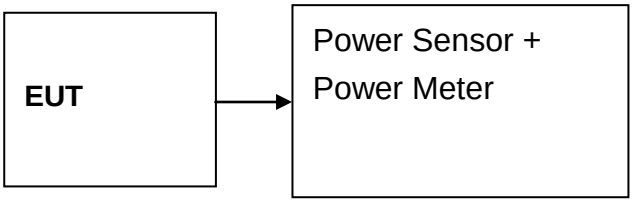

7.5.4. TEST RESULTS

No non-compliance noted

Test Data

Channel	Frequency (MHz)	Output Power (dBm)	Output Power (W)	Limit (W)	Peak /AVG	Result
Low	2402	3.88	0.00244	1	peak	PASS
Mid	2440	4.25	0.00266			PASS
High	2480	4.60	0.00288			PASS
Low	2402	3.65	0.00232	1	AVG	PASS
Mid	2440	4.06	0.00255			PASS
High	2480	4.45	0.00279			PASS

This report shall not be reproduced except in full, without the written approval of Compliance Certification Services (Shenzhen) Inc.

7.6. BAND EDGES MEASUREMENT

7.6.1. LIMITS

According to §15.247(d), in any 100 kHz bandwidth outside the frequency bands in which the spread spectrum intentional radiator in operating, the radio frequency power that is produced by the intentional radiator shall be at least 20 dB below that in the 100 kHz bandwidth within the band that contains the highest level of the desired power, based on either an RF conducted or a radiated measurement, provided the transmitter demonstrates compliance with the peak conducted power limits. In addition, radiated emissions which fall in the restricted bands, as defined in §15.205(a), must also comply with the radiated emission limits specified in 15.209(a) (see Section 15.205(c)).

7.6.2. TEST PROCEDURES (please refer to measurement standard)

1. The EUT is placed on a turntable, which is 0.8m above the ground plane.
2. The turntable shall be rotated for 360 degrees to determine the position of maximum emission level.
3. EUT is set 3m away from the receiving antenna, which is varied from 1m to 4m to find out the highest emission.
4. Set the spectrum analyzer in the following setting in order to capture the lower and upper band-edges of the emission:
   (a) PEAK: RBW=1MHz / VBW=3MHz / Sweep=AUTO
   (b) AVERAGE: RBW=1MHz / VBW=1/T / Sweep=AUTO
5. Repeat the procedures until all the PEAK and AVERAGE versus POLARIZATION are measured.

7.6.3. TEST SETUP

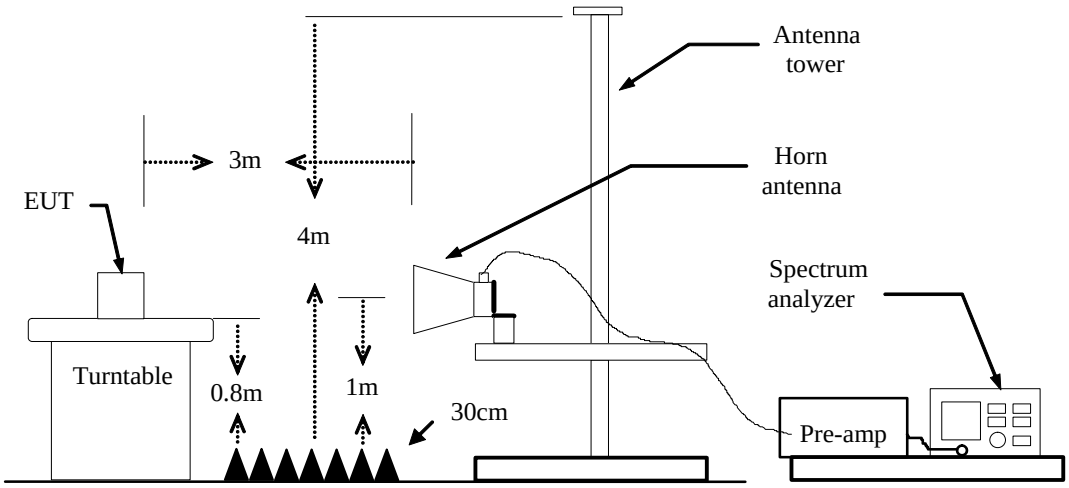

This report shall not be reproduced except in full, without the written approval of Compliance Certification Services (Shenzhen) Inc.

7.6.4. TEST RESULTS

Test Plot

Band Edges (CH Low)

Detector mode: Peak **Polarity: Vertical**

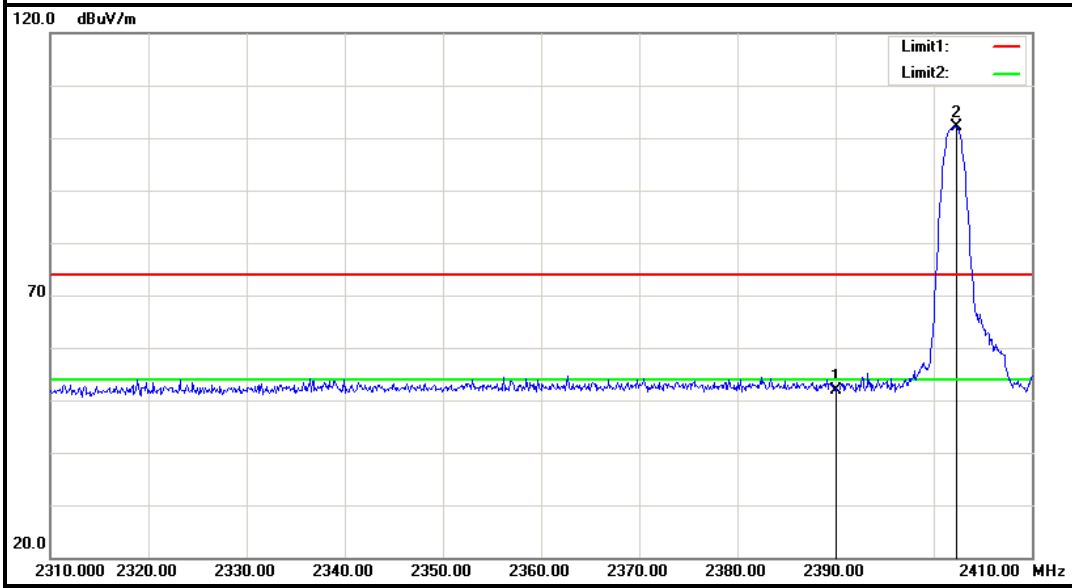

Detector mode: Average **Polarity: Vertical**

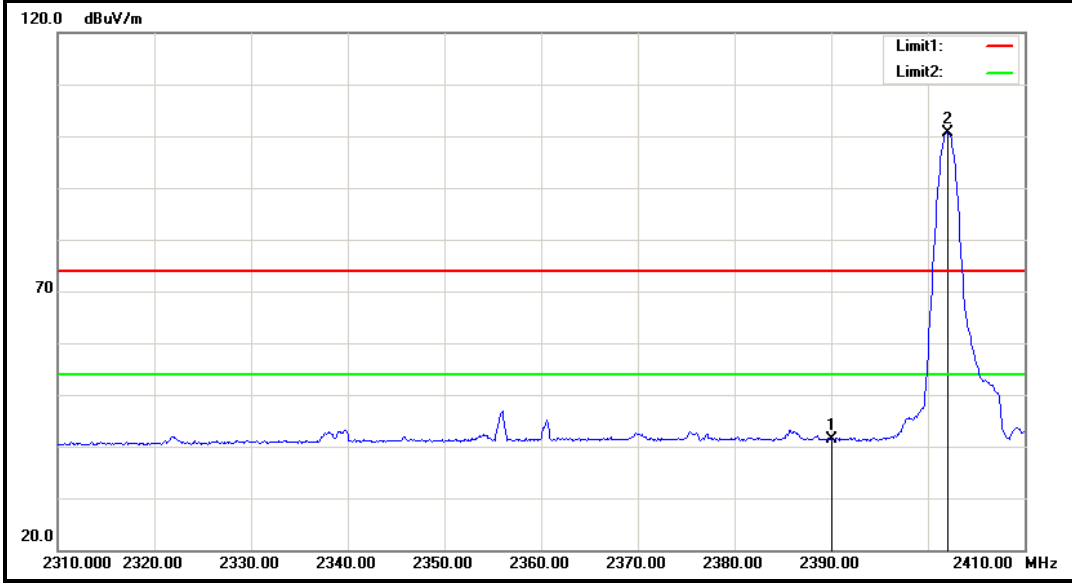

No.	Frequency (MHz)	Reading (dB)	Factor (dB/m)	Result (dB/m)	Limit (dB/m)	Margin (dB)	Remark	Antenna Polar
1	2390.000	54.72	-2.86	51.86	74.00	-22.14	Peak	Vertical
2	2402.300	105.00	-2.80	102.20	---	---	Peak	Vertical
1	2390.000	44.21	-2.86	41.35	54.00	-12.65	Average	Vertical
2	2402.000	103.52	-2.80	100.72	---	---	Average	Vertical

This report shall not be reproduced except in full, without the written approval of Compliance Certification Services (Shenzhen) Inc.

Detector mode: Peak **Polarity: Horizontal**

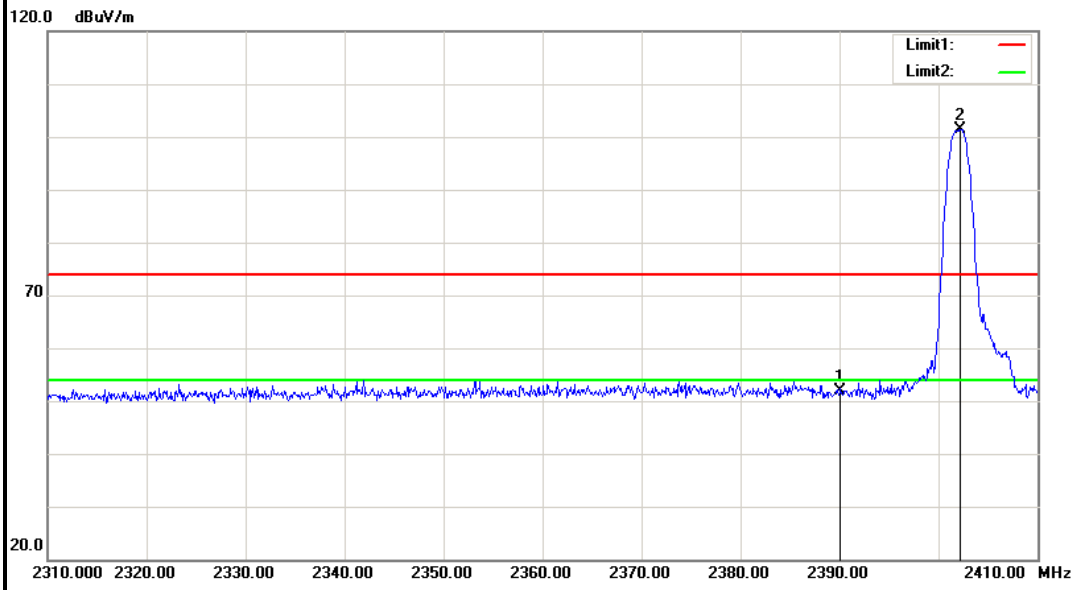

Detector mode: Average **Polarity: Horizontal**

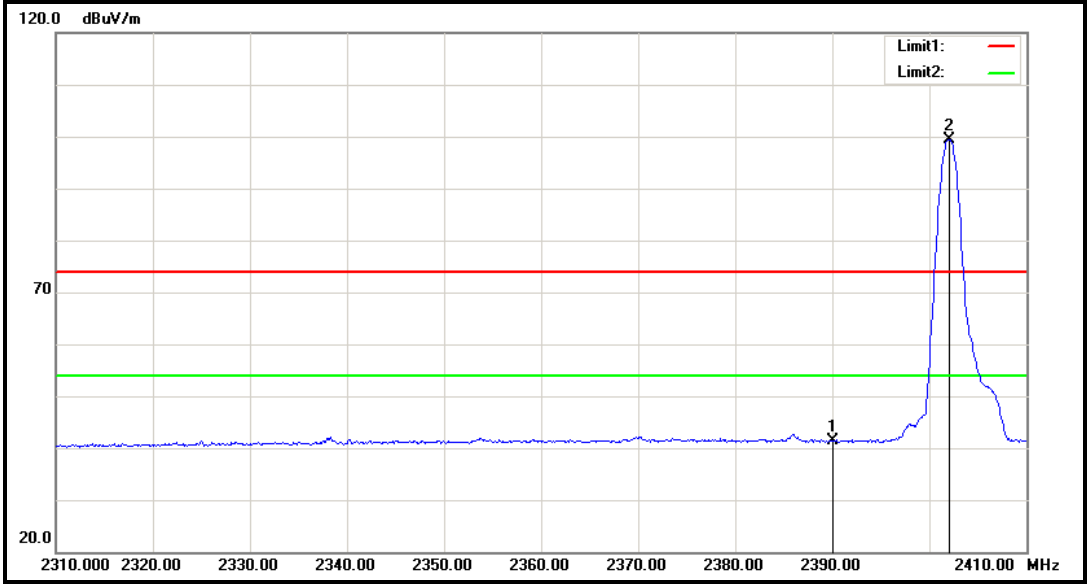

No.	Frequency (MHz)	Reading (dB)	Factor (dB/m)	Result (dB/m)	Limit (dB/m)	Margin (dB)	Remark	Antenna Polar
1	2390.000	54.68	-2.86	51.82	74.00	-22.18	Peak	Horizontal
2	2402.200	104.25	-2.80	101.45	---	---	Peak	Horizontal
1	2390.000	44.29	-2.86	41.43	54.00	-12.57	Average	Horizontal
2	2402.000	102.27	-2.80	99.47	---	---	Average	Horizontal

This report shall not be reproduced except in full, without the written approval of Compliance Certification Services (Shenzhen) Inc.

Band Edges (CH-High)

Detector mode: Peak **Polarity: Vertical**

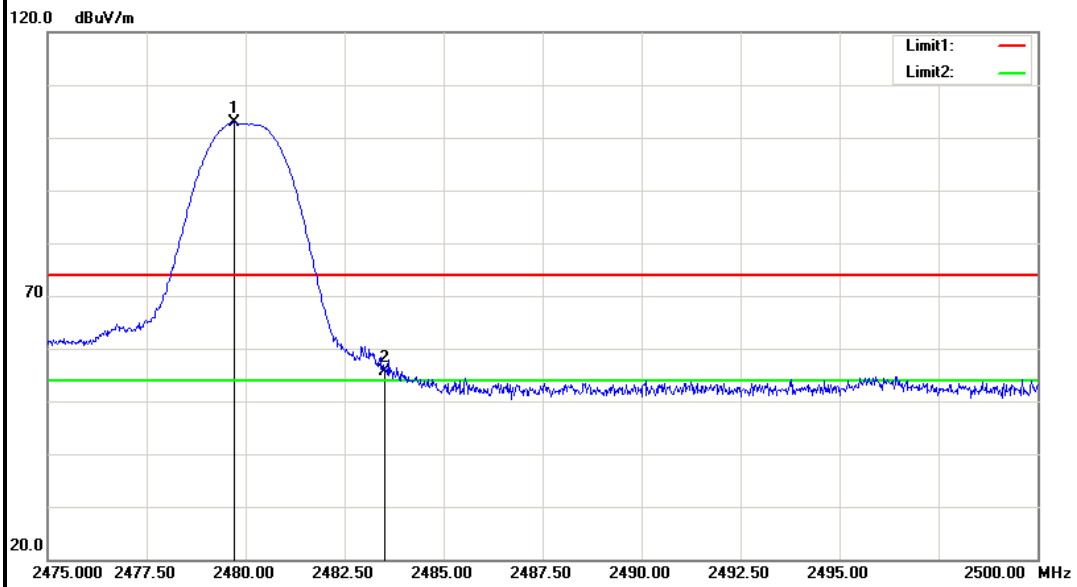

Detector mode: Average **Polarity: Vertical**

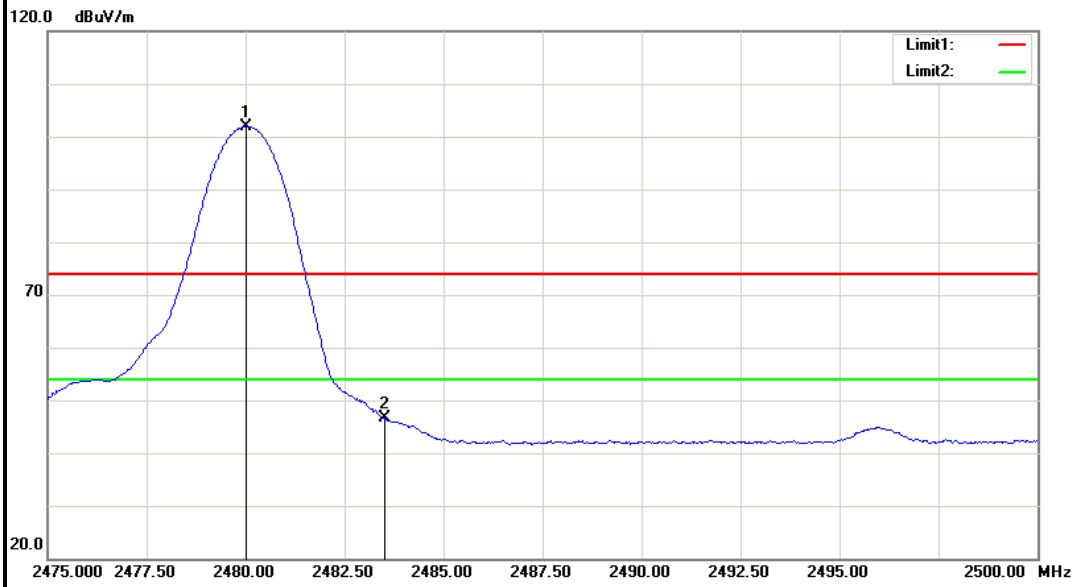

No.	Frequency (MHz)	Reading (dB)	Factor (dB/m)	Result (dB/m)	Limit (dB/m)	Margin (dB)	Remark	Antenna Polar
1.	2479.725	105.15	-2.37	102.78	---	---	Peak	Vertical
2.	2483.500	58.08	-2.35	55.73	74.00	-18.27	Peak	Vertical
1.	2480.025	104.35	-2.37	101.98	---	---	Average	Vertical
2.	2483.500	48.90	-2.35	46.55	54.00	-7.45	Average	Vertical

This report shall not be reproduced except in full, without the written approval of Compliance Certification Services (Shenzhen) Inc.

Detector mode: Peak **Polarity: Horizontal**

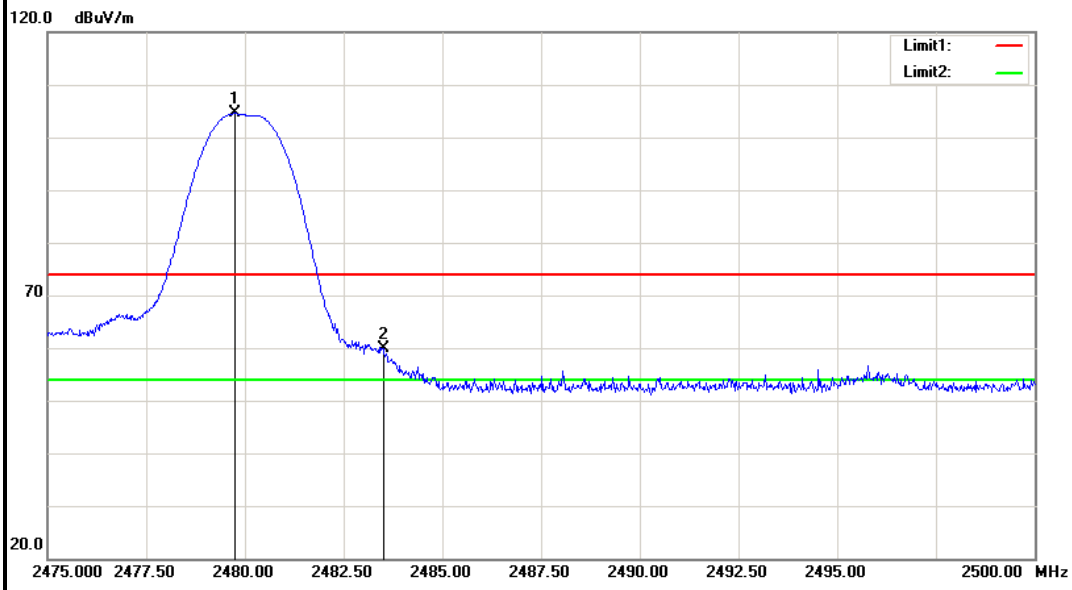

Detector mode: Average **Polarity: Horizontal**

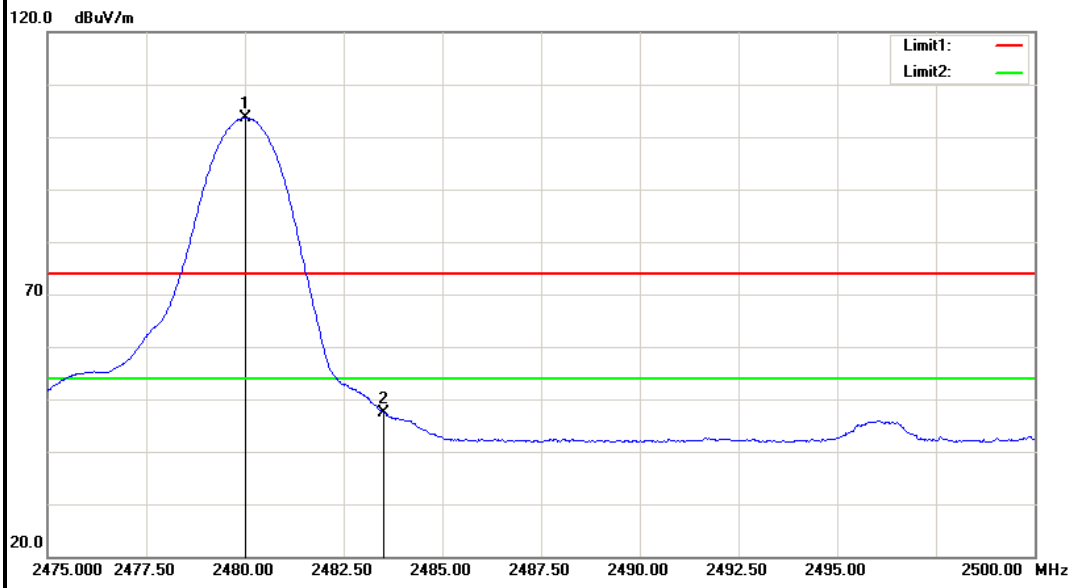

No.	Frequency (MHz)	Reading (dB)	Factor (dB/m)	Result (dB/m)	Limit (dB/m)	Margin (dB)	Remark	Antenna Polar
1	2479.750	106.89	-2.37	104.52	---	---	Peak	Horizontal
2	2483.500	62.17	-2.35	59.82	74.00	-14.18	Peak	Horizontal
1	2480.000	106.01	-2.37	103.64	---	---	Average	Horizontal
2	2483.500	49.83	-2.35	47.48	54.00	-6.52	Average	Horizontal

This report shall not be reproduced except in full, without the written approval of Compliance Certification Services (Shenzhen) Inc.

7.7. PEAK POWER SPECTRAL DENSITY MEASUREMENT

7.7.1. LIMITS

According to §15.247(e), for digitally modulated systems, the power spectral density conducted from the intentional radiator to the antenna shall not be greater than 8 dBm in any 3 kHz band during any time interval of continuous transmission.

According to §15.247(f), the digital modulation operation of the hybrid system, with the frequency hopping turned off, shall comply with the power density requirements of paragraph (d) of this section.

7.7.2. TEST PROCEDURES (please refer to measurement standard)

1. Set analyzer center frequency to DTS channel center frequency.
2. Set the span to 1.5 times the DTS bandwidth.
3. Set the RBW to: 3 kHz ≤ RBW ≤ 100 kHz.
4. Set the VBW ≥ 3 RBW.
5. Detector = peak.
6. Sweep time = auto couple.
7. Trace mode = max hold.
8. Allow trace to fully stabilize.
9. Use the peak marker function to determine the maximum amplitude level within the RBW.
10. If measured value exceeds limit, reduce RBW (no less than 3 kHz) and repeat.

7.7.3. TEST SETUP

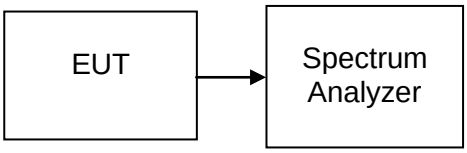

This report shall not be reproduced except in full, without the written approval of Compliance Certification Services (Shenzhen) Inc.

7.7.4. TEST RESULTS

No non-compliance noted

Test Data

Channel	Frequency (MHz)	PPSD (dBm)	Limit (dBm)	Test Result
Low	2402	-9.285	8.00	PASS
Mid	2440	-8.278		PASS
High	2480	-7.725		PASS

This report shall not be reproduced except in full, without the written approval of Compliance Certification Services (Shenzhen) Inc.

Test Plot

PPSD (CH Low)

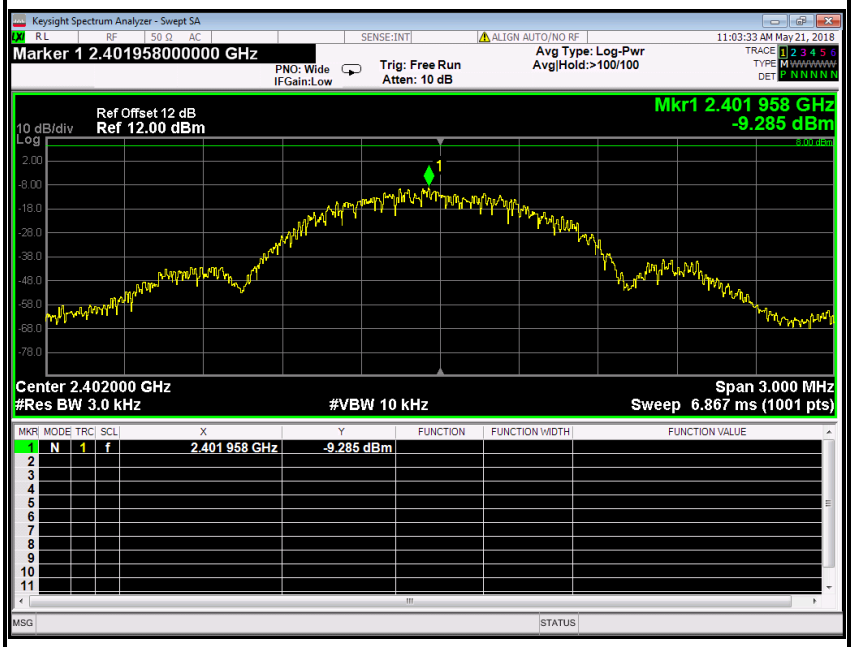

PPSD (CH Mid)

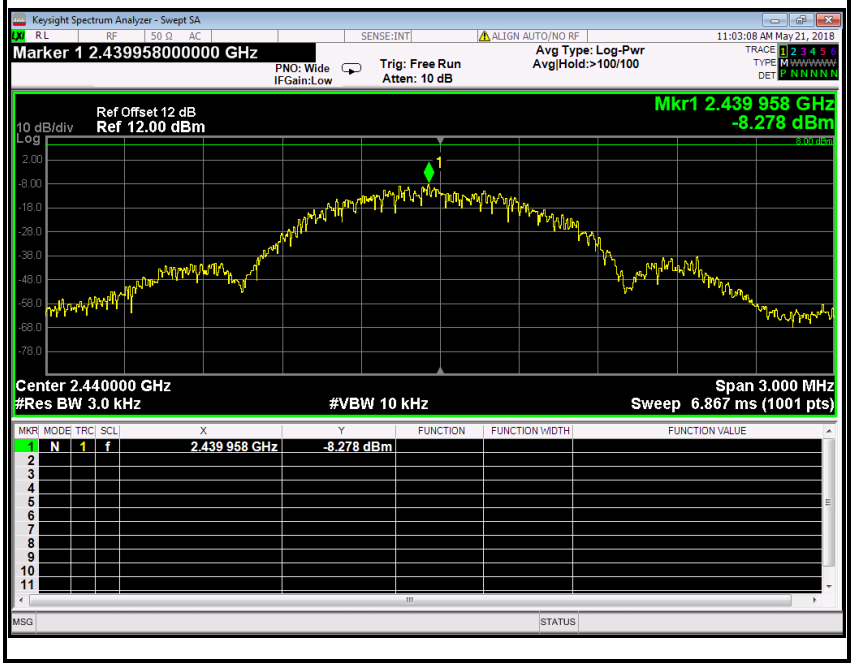

This report shall not be reproduced except in full, without the written approval of Compliance Certification Services (Shenzhen) Inc.

PPSD (CH High)

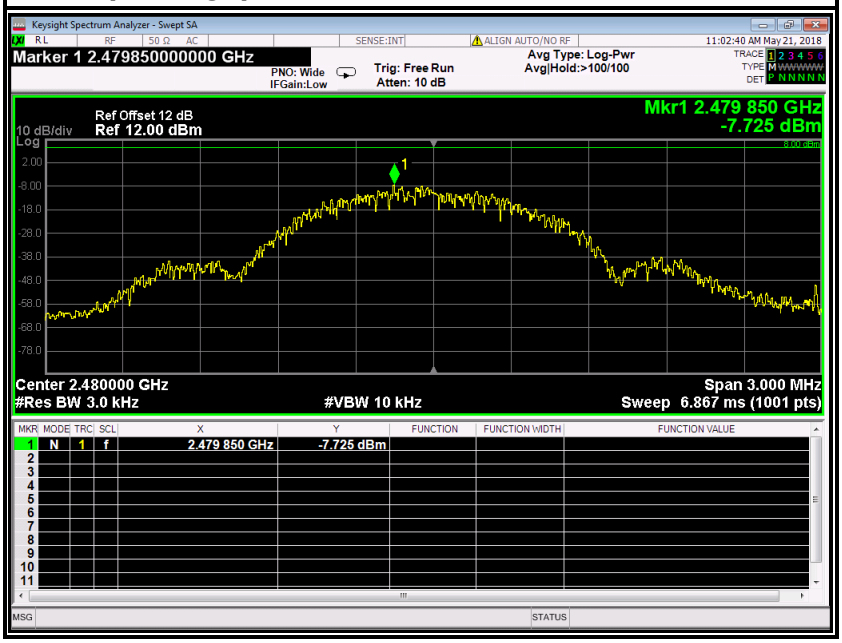

This report shall not be reproduced except in full, without the written approval of Compliance Certification Services (Shenzhen) Inc.