TCL 创意感动生活 The Creative Life

TONLY

TBM-CBC5

DATA SHEET

Monday, 29 September 2014

Version 1.1

Datasheet by Peter.huang

Revision History

Date	Version	Description	Author
2013-10-21	V1.0	n First Release	
2014-09-29	V1.1	n Correct 8DQPSK to 8DPSK	

DESCRIPTION:

TBM–CBC5 is first generation of TCL Bluetooth modules.It provides highest level of integration with integrated 2.4GHz radio, DSP, battery charger, stereo codec mono and stereo audio applications.TBM–CBC5 is also ready to support the lates Bluetooth 3.0 standard

The embedded DSP core allows enhancement of the product with features such as advanced audio decoding (MP3, AAC, AAC+), echo cancellation, noise reduction, and data manipulation.

TCL's TONLY flexible firmware enables device manufacturers to easily add wireless, secure, and standard- based Bluetooth connectivity into new or existing applications with very limited development and manufacturing effort.

APPLICATIONS:

- High quality wireless stereo headsets
- Wireless mono headsets
- Wireless speakers
- USB multimedia dongles
- MP3 players
- VoIP handsets
- Hands-free car kits

FEATURES:

- TBM–CBC5 Bluetooth module Solution For mono and Stereo Audio Solutions
- Integrated DSP, Stereo Codec, and Battery Charger
- Bluetooth 3.0 + EDR Compliant
- Class 2 - Range up to 30 Meters
- Temperature range from -30C to +85C
- Low Power Consumption
- TCL TONLY Firmware for Controlling Connections and Configuring Settings
- Supported Bluetooth Profiles: A2DP, AVRCP, HFP, HFP-AG, SPP, OPP, FTP, HSP, DUN, PBAP and HID ect...

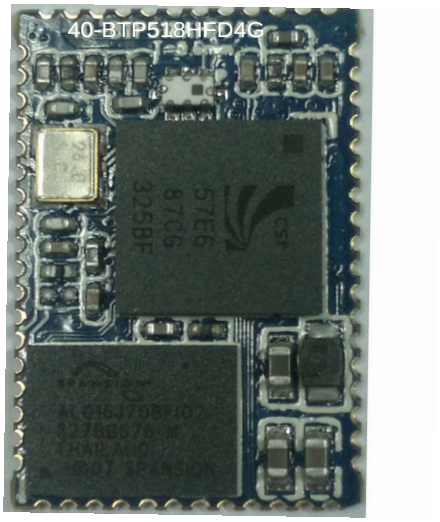

Size: 13.5*21 mm

2 Block Diagram and Descriptions

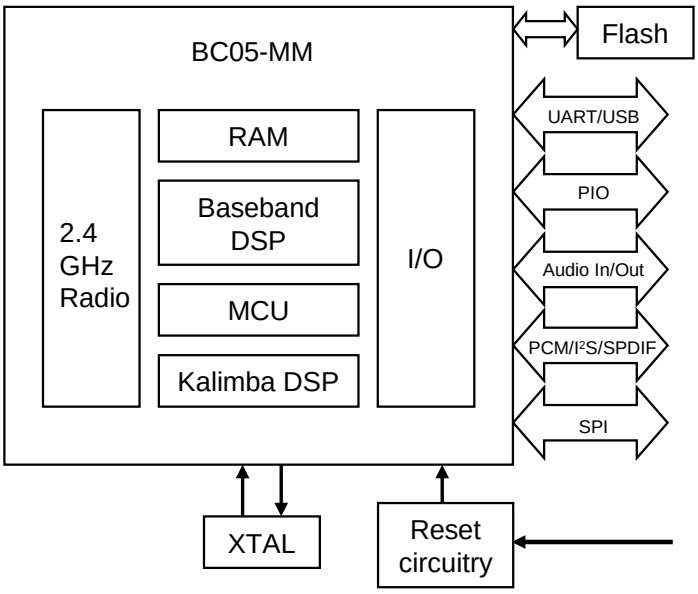

Figure 1: Block diagram of TBM–CBC5

BC05-MM

The BlueCore05-MM is a single-chip radio and baseband IC for Bluetooth 2.4GHz systems. It provides a fully compliant Bluetooth system to v3.0+EDR of the specification for data and voice.

BlueCore05-MM contains the Kalimba DSP co-processor with double the MIPS of BlueCore03-MM, supporting enhanced audio applications. BlueCore05-MM integrates a 16-bit stereo codec and it has a fully differential audio interface with a low noise microphone bias.

Crystal

The crystal oscillates at 26MHz.

Flash

Flash memory is used for storing the Bluetooth protocol stack and Virtual Machine applications. It can also be used as an optional external RAM for memory-intensive applications.

Balanced Filter

Combined balun and filter changes the balanced input/output signal of the module to unbalanced signal of the antenna. The filter is a band pass filter (ISM band).

Antenna

TBM–CBC5 uses ceramic chip antenna with high dielectric constant, which makes the antenna very insensitive to surrounding environment and thus gives high design freedom around the antenna.

USB

The USB interface is a full speed Universal Serial Bus (USB) interface for communicating with other compatible digital devices.TBM–CBC5 acts as a USB peripheral, responding to requests from a Master host controller such as a Personal Computer (PC).

Synchronous Serial Interface

This interface is a synchronous serial port interface (SPI) for interfacing with other digital devices. The SPI port can be used for system debugging. It can also be used for programming the Flash memory.

UART

This interface is a standard Universal Asynchronous Receiver Transmitter (UART) interface for communicating with other serial devices.

PCM / I^2S / SPDIF Interface

This interface is a bi-directional serial programmable audio interface supporting PCM, I2S and SPDIF formats.

Audio Interface

The audio interface of TBM–CBC5 has fully differential inputs and outputs and a microphone bias output. A high-quality stereo audio Bluetooth application can be implemented with minimum amount of external components.

Programmable I/O

BTP518B has a total of 10 digital programmable I/O terminals. These are controlled by the firmware running on the device.

Reset

TBM–CBC5 has a reset circuitry that is used to reset the module in the startup to ensure proper operation of the flash memory. Alternatively, the reset can be externally driven by using a TBM–CBC5 reset pin.

802.11 Coexistence Interface

Dedicated hardware is provided to implement a variety of coexistence schemes. Channel skipping AFH (Adaptive Frequency Hopping), priority signaling, channel signaling, and host passing of channel instructions are all supported. The features are configured in firmware. Since the details of some methods are proprietary (e.g. Intel WCS)

3 Electrical Characteristics

Absolute maximum ratings

	Min	Max	Unit
Storage temperature	-40	85	°C
Operating temperature	-30	85	°C
VDD_IO	-0.4	3.6	V
VDD_BAT	-0.4	4.4	V
VDD_CHG	-0.4	6.5	V
Terminal voltages	-0.4	Vdd + 0,4	V

The module should not continuously run under these conditions. Exposure to absolute maximum rating conditions for extended periods of time may affect reliability and cause permanent damage to the device.

Table 1: Absolute maximum ratings

Recommended operating conditions

	Min	Max	Unit
Operating temperature	-40	85	°C
VDD_IO	1.7	3.6	V
VDD_BAT	2.5	4.4	V
VDD_CHG	0	6.5	V
Terminal voltages	0	VDD	V

Table 2: Recommended operating conditions

Terminal characteristics

	Min	Typ	Max	Unit
I/O voltage levels				
V_{IL} input logic level low	-0.4	-	0.25xVDD	V
V_{IH} input logic level high	0.625xVDD	-	Vdd + 0.3	V
V_{OL} output logic level low	0	-	0.125	V
V_{OH} output logic level high	0.75xVDD	-	VDD	V
Reset terminal				
$V_{TH,res}$ threshold voltage	0.64	0.85	1.5	V
R_{IRES} input resistance		220		kΩ
C_{IRES} input capacitance		220		nF
Input and tri-state current with				
Strong pull-up	-100	-40	-10	µA
Strong pull-down	10	40	100	µA
Weak pull-up	-5	-1	-0.2	µA
Weak pull-down	0.2	1	5	µA
I/O pad leakage current	-1	0	1	µA
LED driver pad				
Off current	-	1	2	µA
On resistance (V_{PAD} < 0.5 V)	-	20	33	Ω
On resistance, pad enabled by battery charger (V_{PAD} < 0.5 V)	-	20	50	Ω

Table 3: Terminal characteristics

Battery charger

Battery charger		Min	Typ	Max	Unit
VDD_CHG		4.5	-	6.5	V
Charging mode (VDD_BAT rising to 4.2 V)					
Supply current [a]		-	4.5	6	mA
Battery trickle charge current [b] [c]	Maximum setting	-	14	-	mA
	Minimum setting	-	4	-	mA
Maximum battery fast charge current [d] [c]	Headroom > 0.7 V [e]	-	140	-	mA
	Headroom = 0.3 V	-	120	-	mA
Minimum battery fast charge current [d] [c]	Headroom > 0.7 V	-	40	-	mA
	Headroom = 0.3 V	-	35	-	mA
Trickle charge voltage threshold		-	2.9	-	V
Float voltage (with correct trim value set), V_{FLOAT} [f]		4.17	4.2	4.23	V
Float voltage trim step size [f]		-	50	-	mV
Battery charge termination current, as a percentage of the fast charge current		5	10	20	%
Standby Mode (BAT_P falling from 4.2V)					
Supply current [a]		-	1.5	2	mA
Battery current		-	-5	-	µA
Battery recharge hysteresis [g]		100	-	200	mV
Shutdown Mode (VDD_CHG too low or disabled by firmware)					
VDD_CHG under-voltage threshold	VDD_CHG rising	-	3.9	-	V
	VDD_CHG falling	-	3.7	-	V
VDD_CHG - BAT_P lockout threshold	VDD_CHG rising	-	0.22	-	V
	VDD_CHG falling	-	0.17	-	V
Supply current		-	1.5	2	mA
Battery current		-1	-	0	µA

[a] Current into VDD_CHG - does not include current delivered to battery (I VDD_CHG - I BAT_P)

[b] BAT_P < Float voltage

[c] Charge current can be set in 16 equally spaced steps

[d] Trickle charge threshold < BAT_P < Float voltage

[e] Where headroom = VDD_CHG - BAT_P

[f] Float voltage can be adjusted in 15 steps. Trim setting is determined in production test and must be loaded into the battery charger by firmware during boot-up sequence

[g] Hysteresis of (VFLOAT - BAT_P) for charging to restart

Table 4: Battery charger characteristics

Stereo CODEC Analogue to Digital Converter						
Parameter	**Conditions**		**Min**	**Typ**	**Max**	**Unit**
Resolution			-	-	16	Bits
Input Sample Rate, F_{sample}			8	-	44.1	kHz
Signal to Noise Ratio, SNR	fin = 1kHz B/W = 20Hz→20kHz A-Weighted THD+N < 1% 150mVpk-pk input	F_{sample}				
		8 kHz	-	82	-	dB
		11.025 kHz	-	81	-	dB
		16 kHz	-	80	-	dB
		22.050 kHz	-	79	-	dB
		32 kHz	-	79	-	dB
		44.1 kHz	-	78	-	dB
Digital Gain	Digital Gain Resolution = 1/32dB		-24	-	21.5	dB
Analogue Gain	Analogue Gain Resolution = 3dB		-3	-	42	dB
Input full scale at maximum gain (differential)			-	4	-	mV rms
Input full scale at minimum gain (differential)			-	800	-	mV rms
3dB Bandwidth			-	20	-	kHz
Microphone mode input impedance			-	6.0	-	kΩ
THD+N (microphone input) @ 30mV rms input			-	0.04	-	%

Table 5: Stereo CODEC ADC characteristics

Stereo CODEC Digital to Analog Converter						
Parameter	**Conditions**		**Min**	**Typ**	**Max**	**Unit**
Resolution			-	-	16	Bits
Input Sample Rate, F_{sample}			8	-	48	kHz
Signal to Noise Ratio, SNR	fin = 1kHz B/W = 20Hz→20kHz A-Weighted THD+N < 1% 150mVpk-pk input	F_{sample}				
		8 kHz	-	95	-	dB
		11.025 kHz	-	95	-	dB
		16 kHz	-	95	-	dB
		22.050 kHz	-	95	-	dB
		32 kHz	-	95	-	dB
		44.1 kHz	-	95	-	dB
Digital Gain	Digital Gain Resolution = 1/32dB		-24	-	21.5	dB
Analogue Gain	Analogue Gain Resolution = 3dB		0	-	-21	dB
Output voltage full scale swing (differential)			-	750	-	mV rms
Allowed Load		Resistive	16(8)	-	OC	Ω
		Capacitive	-	-	500	pF
THD+N 100kΩ load			-	-	0.01	%
THD+N 16Ω load			-	-	0.1	%
SNR (Load = 16Ω, 0dBFS input relative to digital silence)			-	95	-	dB

Table 6: Stereo CODEC DAC characteristics

Radio characteristics and general specifications

	Specification		Note
Operating frequency range	(2400 ... 2483,5) MHz		ISM Band
Lower quard band	2 MHz		
Upper quard band	3,5 MHz		
Carrier frequency	2402 MHz ... 2480 MHz		f = 2402 + k, k = 0...78
Modulation method	GFSK (1 Mbps) ∏/4 DQPSK (2Mbps) 8DPSK (3Mbps)		
Hopping	1600 hops/s, 1 MHz channel space		
Maximum data rate	GFSK:	Asynchronous, 723.2 kbps / 57.6 kbps Synchronous: 433.9 kbps / 433.9 kbps	
	∏/4 DQPSK:	Asynchronous, 1448.5 kbps / 115.2 kbps Synchronous: 869.7 kbps / 869.7 kbps	
	8DPSK:	Asynchronous, 2178.1 kbps / 177.2 kbps Synchronous: 1306.9 kbps / 1306.9 kbps	
Receiving signal range	TBD		Typical condition
Receiver IF frequency	1.5 MHz		Center frequency
Transmission power	Min	TBD	
	Max	TBD	
RF input impedance	50 Ω		
Compliance	Bluetooth specification, version 2.1 + EDR		
USB specification	USB specification, version 1.1 (USB 2.0 compliant)		

TRM/CA/01/C (Output Power)

Packet Length Tested: DH5				
Hopping ON	Low	Med	High	Limits
Average Power	1.81 dBm	1.98 dBm	1.91 dBm	
Max Power	1.82 dBm	2.00 dBm	1.92 dBm	< 20.00 dBm
Min Power	1.80 dBm	1.98 dBm	1.90 dBm	> -6.00 dBm
Peak Power	1.96 dBm	2.15 dBm	2.10 dBm	< 23.00 dBm

RCV/CA/01/C (Single Sensitivity)

Power Level: -87.5 dBm, Dirty Tx Status: ON		
Hopping ON	Any	Limits
Overall BER	0.03%	<= 0.1%
Overall FER	5.67%	<= 100%

Table 7: Radio characteristics and general specifications

4 TBM–CBC5 Pin Description

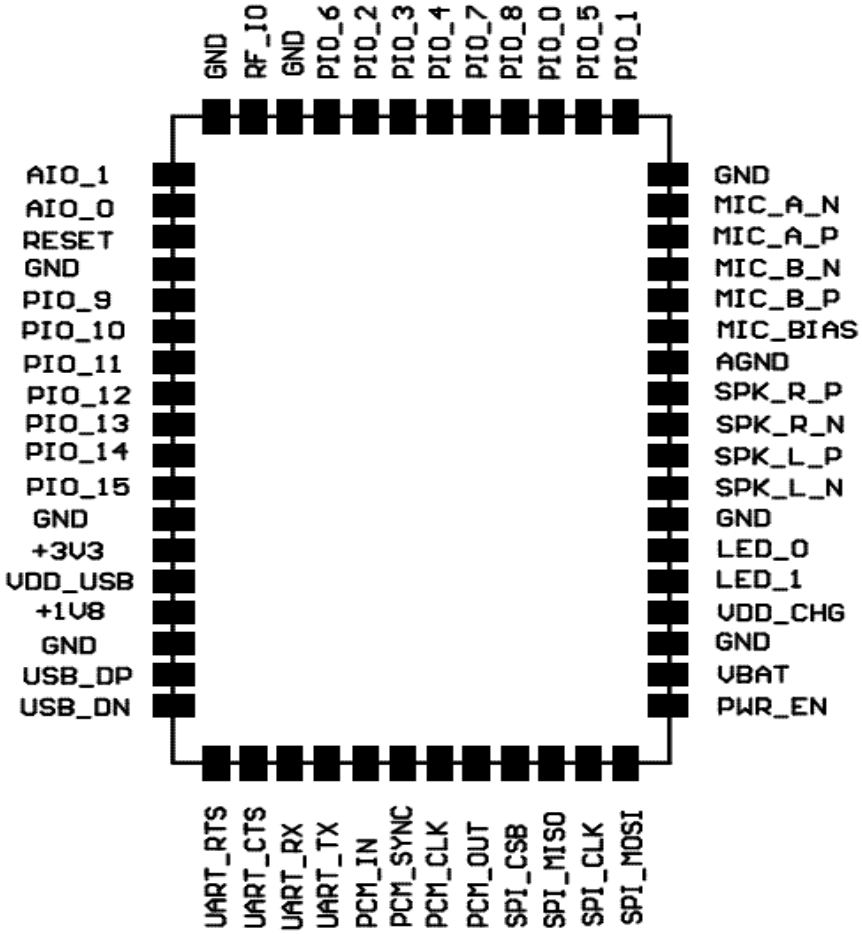

Figure 2: TBM–CBC5 connection diagram (top view)

NOTE: VREG_ENA pin is only available with the production version of the module. With engineering samples the VREG_ENA is internally connected to VDD_BAT.

4.1 Device Terminal Functions

DGND

Connect digital GND pins to the ground plane of the PCB.

VDD_IO

Supply voltage connection for the digital I/Os of the module. Supply voltage at this pin can vary between 1.8 V and 3.3 V. Output voltage swing at the digital terminals ofTBM–CBC5 2 is 0 to VDD_IO.

VDD_BAT

Input for an internal 1.8 V switched mode regulator combined with output of the internal battery charger. See chapter 5.3 for detailed description for the charger. When not powered from a battery, VDD_IO and VDD_BAT can be combined to a single 3.3 V supply voltage.

VREG_ENA

Enable pin for the internal 1,8 V regulator. This pin is only available with production version. With the engineering samples VREG_ENA is internally connected to VDD_BAT.

VDD_CHG

Charger input voltage. The charger will start operating when voltage to this pin is applied. When the charger is not used, this pin should be left floating. See chapter 5.3 for detailed description of the

RES

The RESET pin is an active high reset and is internally filtered using the internal low frequency clock oscillator. A reset will be performed between 1.5 and 4.0ms following RESET being active. It is recommended that RESET be applied for a period greater than 5ms.

PIO0 – PIO15

Programmable digital I/O lines. All PIO lines can be configured through software to have either weak or strong pull-ups or pull-downs. Configuration for each PIO line depends on the application. See section 16 “I/O parallel ports” for detailed descriptions for each terminal. Default conf iguration for all of the PIO lines is input with weak internal pull-up.

AIO0 – AIO1

AIOs can be used to monitor analogue voltages such as a temperature sensor for the battery charger. AIOs can also be configured to be used as digital I/Os. The voltage level at these pins is 0 V to 1,5 V.

UART_NRTS

A CMOS output with a weak internal pull-up. This pin can be used to implement RS232 hardware flow control where RTS (request to send) is an active low indicator. The UART interface requires an external RS232 transceiver chip.

UART_NCTS

A CMOS input with a weak internal pull-down. This pin can be used to implement RS232 hardware flow control where CTS (clear to send) is an active low indicator. The UART interface requires an external RS232 transceiver chip.

UART_RXD

A CMOS input with a weak internal pull-down. RXD is used to implement UART data transfer from another device to TBM–CBC5.The UART interface requires an external RS232 transceiver chip.

UART_TXD

A CMOS output with a weak internal pull-up. TXD is used to implement UART data transfer from T BM–CBC5 to another device. The UART interface requires external RS232 transceiver chip.

PCM_OUT

A CMOS output with a weak internal pull-down. Used in the PCM (pulse code modulation) interface to transmit digitized audio. The PCM interface is shared with the I^2S interface.

PCM_IN

A CMOS input with a weak internal pull-down. Used in the PCM interface to receive digitized audio. The PCM interface is shared with the I^2S interface.

PCM_CLK

A bi-directional synchronous data clock signal pin with a weak internal pull-down. PCMC is used in the PCM interface to transmit or receive the CLK signal. When configured as a master, WT32 generates the clock signal for the PCM interface. When configured as a slave, the PCMC is an input and receives the clock signal from another device. The PCM interface is shared with the I^2S interface.

PCM_SYNC

A bi-directional synchronous data strobe with a weak internal pull-down. When configured as a master, TBM–CBC5 generates the SYNC signal for the PCM interface. When configured as a slave, the PCMS is an input and receives the SYNC signal from another device.The PCM interface is shared with the I^2S interface.

USB_D+

A bi-directional USB data line with a selectable internal 1.5 kΩ pull-up implemented as a current source (compliant with USB specification v1.2) An external series resistor is required to match the connection to the characteristic impedance of the USB cable.

USB_D-

A bi -directional USB data line. An external series resistor is required to match the connection to the characteristic impedance of the USB cable.

SPI_NCSB

A CMOS input with a weak internal pull-down. Active low chip select for SPI (serial peripheral interface).

SPI_CLK

A CMOS input for the SPI clock signal with a weak internal pull-down. TBM–CBC5 is the slave and receives the clock signal from the device operating as a master.

SPI_MISO

An SPI data output with a weak internal pull-down.

SPI_MOSI

An SPI data input with a weak internal pull-down.

RF

This pin can be used when not using a chip antenna or w.fl connector of the module.

AUDIO_IN_P_RIGHT and AUDIO_IN_N_RIGHT

Right channel audio inputs. This dual audio input can be configured to be either single-ended or fully differential and programmed for either microphone or line input. Route differential pairs close to each other and use a solid dedicated audio ground plane for the audio signals.

AUDIO_IN_P_LEFT and AUDIO_IN_N_LEFT

Left channel audio input. ESD protection and layout considerations similar to right channel audio should be used.

AUDIO_OUT_P_RIGHT and AUDIO_OUT_N_RIGHT

Right channel audio output. The audio output lines should be routed differentially to either the speakers or to the output amplifier, depending on whether or not a single-ended signal is required. Use low impedance ground plane dedicated for the audio signals.

AUDIO_OUT_P_LEFT and AUDIO_OUT_N_LEFT

Left channel audio output. The same guidelines apply to this section as discussed previously.

MIC_BIAS

Bias voltage output for a microphone. Use the same layout guidelines as discussed previously with other audio signals.

LED0

TBM–CBC5 includes a pad dedicated to driving LED indicators. This terminal may be controlled by firmware and it can also be set by the battery charger. The terminal is an open-drain output, so the LED must be connected from a positive supply rail to the pad in series with a current limiting resistor.

It is recommended that the LED pad is operated with a pad voltage below 0.5V. In this case, the pad can be thought of as a resistor, RON. The resistance together with the external series resistor will set the current, ILED, in the LED. Value for the external series resistance can be calculated from the Equation 1

$$R_{LED} = \frac{VDD - V_F}{I_{LED}} - R_{ON}$$

Equation 1: LED series resistor

Where V_F is the forward voltage drop of the LED, I_{LED} is the forward current of the LED and R_{ON} is the on resistance (typically 20 Ω) of the LED driver.

5. TBM–CBC5 Physical Dimensions

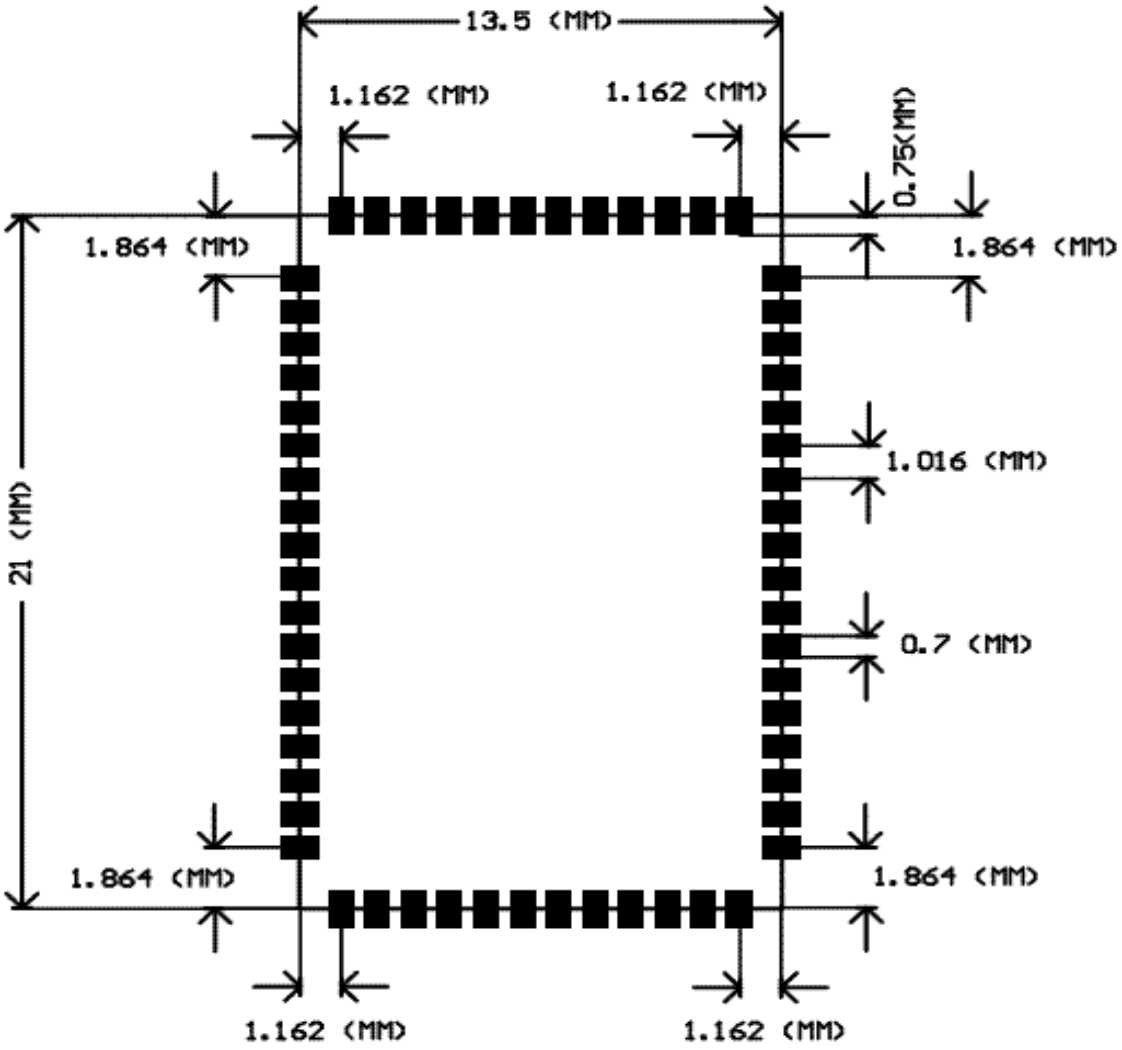

Recommended PCB land pattern for TBM–CBC5

Internal Photo

Sony Corporation
Personal Audio System
[Model : SRS-X3]

Internal Photo

Sony Corporation
Personal Audio System
[Model : SRS-X3]

Internal Photo

Sony Corporation
Personal Audio System
[Model : SRS-X3]

Antenna

Antenna Type:PCB Layout Inverted-F Antenna;
Gain:2.12dBi;

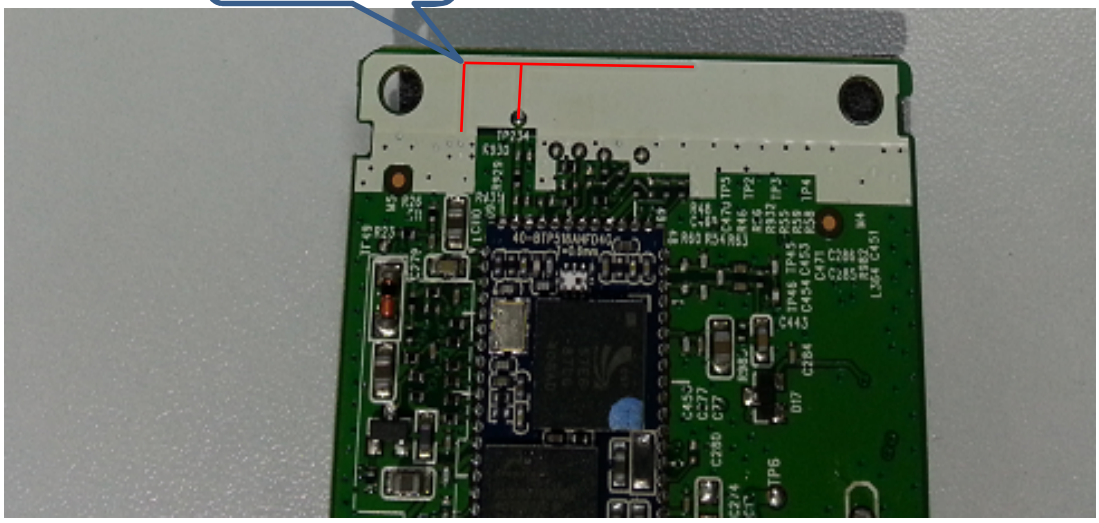

Internal Photo

Sony Corporation
Personal Audio System
[Model : SRS-X3]

Main board photo

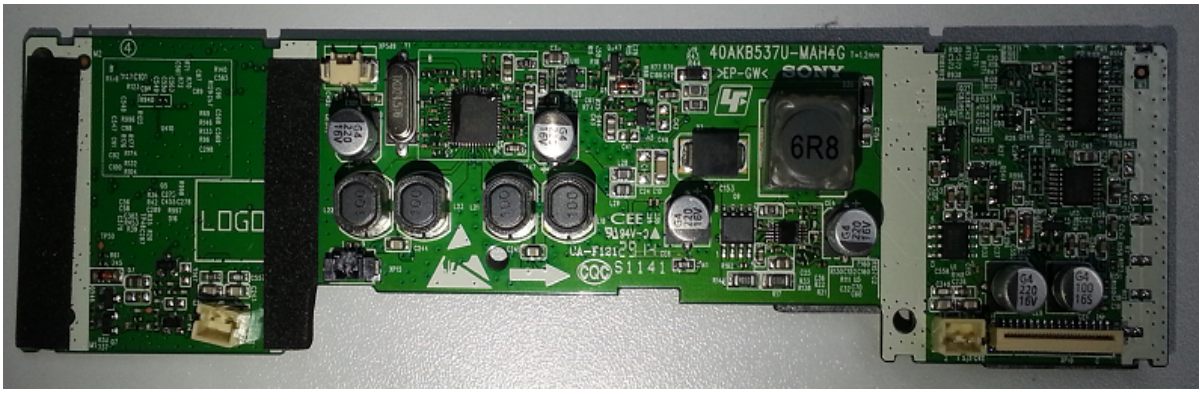

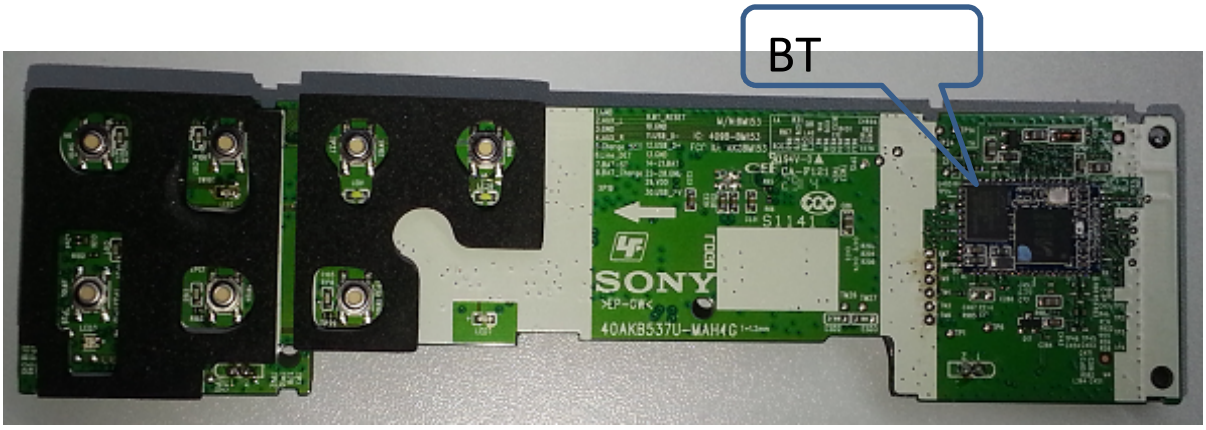

Internal Photo

Sony Corporation
Personal Audio System
[Model : SRS-X3]

CN board photo

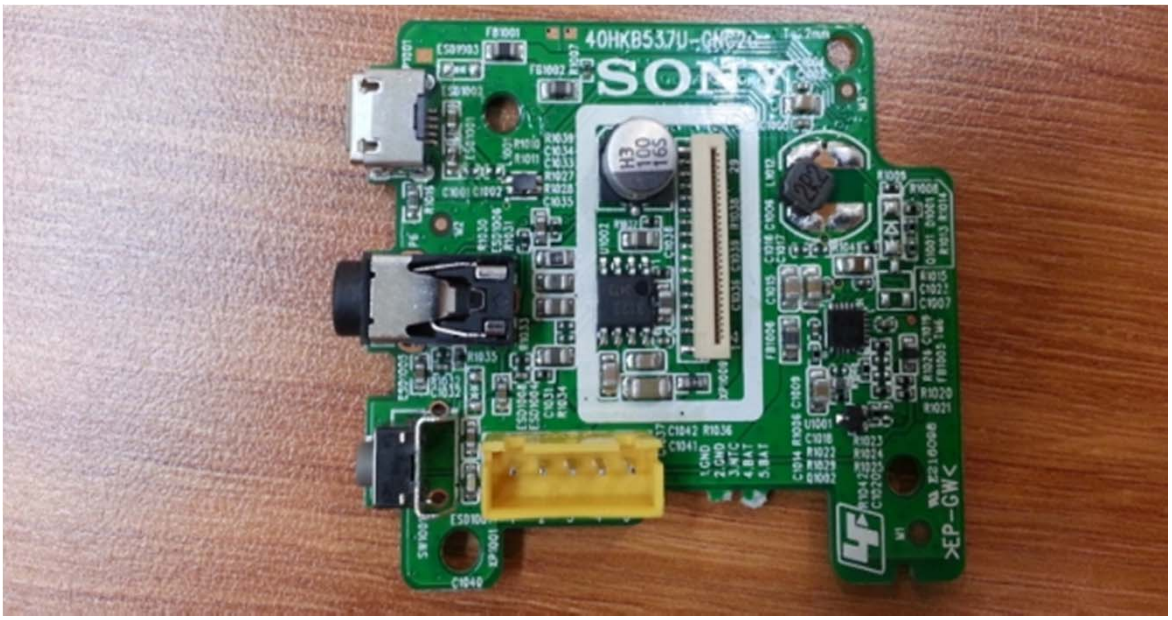

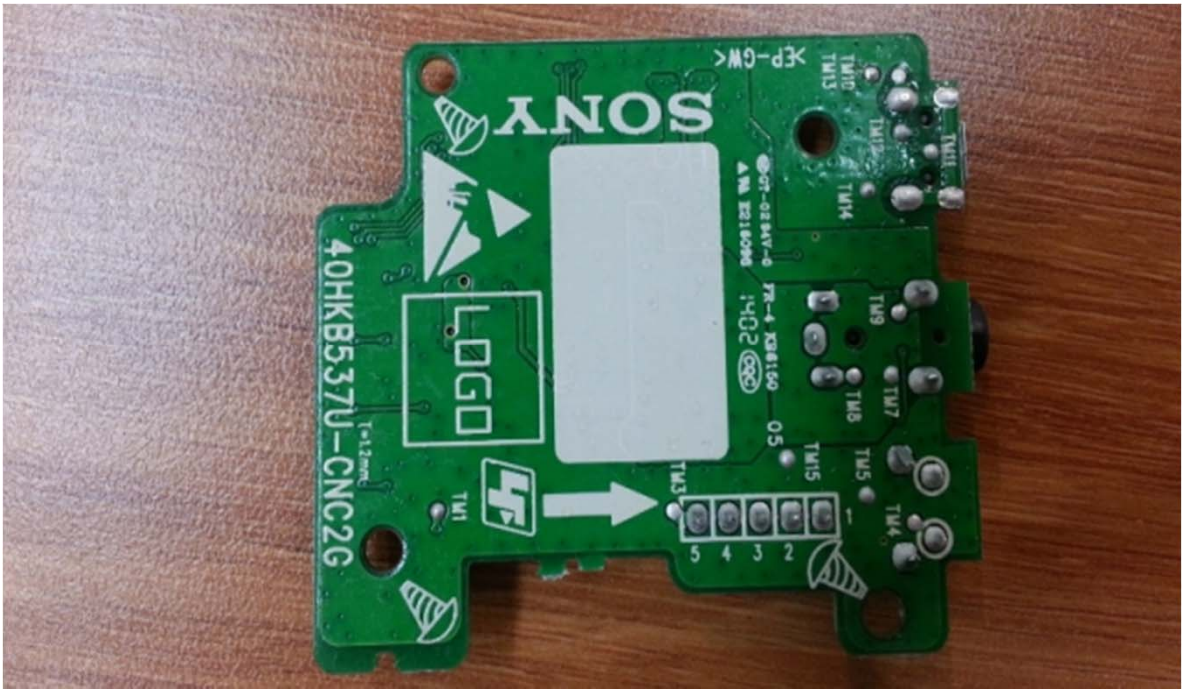

How to fixed the module to SRS-X3.

When the PCBA Main board, CN board and others is OK.
Insert FFC cable into Jack XP19 on Main board, insert the speaker cable into Jack XS1, XS2 on Main board, as follow photo:

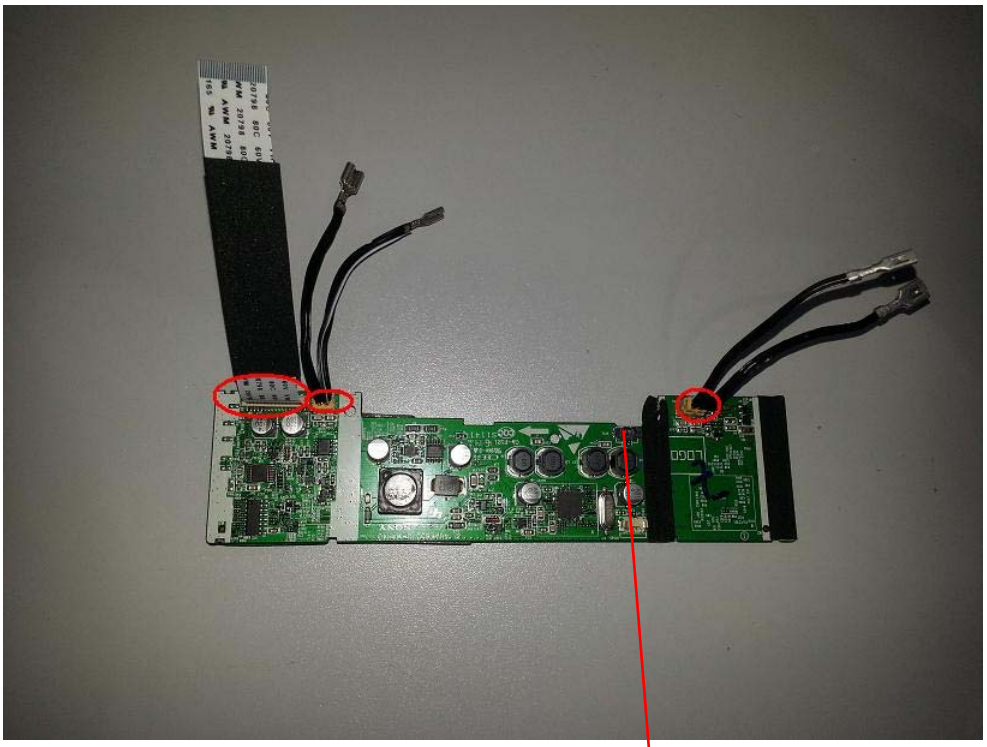

Insert NFC cable into Jack XP15 on Main board, and insert the Main board to plastic case, as follow photo

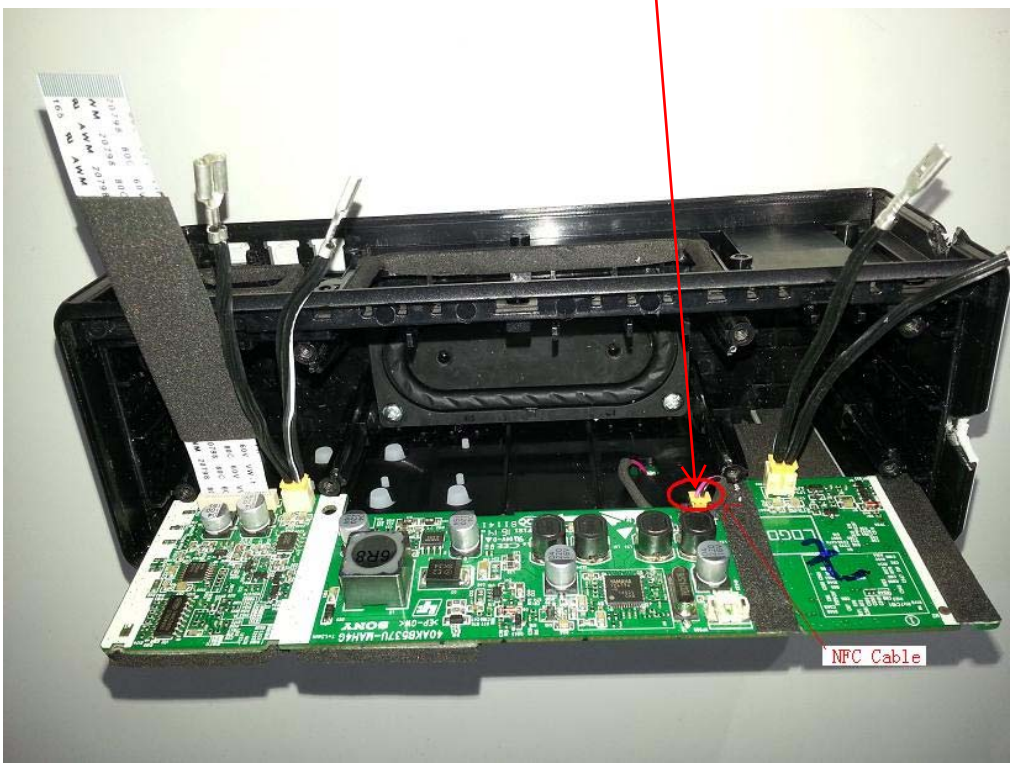

Connect the Main board to cn board with the FFC cable, insert the battery cable into Jack XP1001 on the CN board, insert the MIC cable into Jack XP589 on the Main board, as follow photo;

Connect the speaker cable to speaker and fix the speaker on the plastic case, as follow photo;

Fix the Front panel on the plastic case, as follow photo;

Fix the MIC on the plastic case, as follow photo;

Fix the Iron nets on the plastic case, as follow photo;

Fix the bottom cover on the plastic case, as follow photo;

Now, one of SRS-X3 is fixed OK, as follow photo;

Front View

Back View

FCC Statement

Changes or modifications not expressly approved by the party responsible for compliance could void the user's authority to operate the equipment

This device complies with Part 15 of the FCC Rules. Operation is subject to the following two conditions: (1) this device may not cause harmful interference, and (2) this device must accept any interference received, including interference that may cause undesired operation.

IC Statement

This device complies with Industry Canada licence-exempt RSS standard(s). Operation is subject to the following two conditions: (1) this device may not cause interference, and (2) this device must accept any interference, including interference that may cause undesired operation of the device.

Le présent appareil est conforme aux CNR d'Industrie Canada applicables aux appareils radio exempts de licence. L'exploitation est autorisée aux deux conditions suivantes : (1) l'appareil ne doit pas produire de brouillage, et (2) l'utilisateur de l'appareil doit accepter tout brouillage radioélectrique subi, même si le brouillage est susceptible d'en compromettre le fonctionnement.

The end host device should bear the label which indicate""Contains FCC ID:ZVAPS000015".or "Contains IC:9976A-PS000015".