F:\HT-CZ1-11_UC\4559026111\4559026111HTCT180UC\01GB-HTCT180UC\010COV.fm
masterpage: Right
010COV.book Page 1 Thursday, September 18, 2014 5:01 PM

SONY

Sound Bar

Operating Instructions	GB
Guide de référence	FR
Manual de instrucciones	ES

HT-CT180

HT-CT180
4-559-026-**11**(1)

H-1001-0001

Owner's Record
The model and serial numbers are located on the bottom of the Bar Speaker. Record serial numbers in the space provided below. Refer to them whenever you call upon your Sony dealer regarding this product.
Model No. HT-CT180
Serial No._____

A-1015-0001

WARNING

To reduce the risk of fire or electric shock, do not expose this apparatus to rain or moisture.

A-1021-0001

The unit is not disconnected from the mains as long as it is connected to the AC outlet, even if the unit itself has been turned off.

A-1022-0002

To reduce the risk of fire, do not cover the ventilation opening of the appliance with newspapers, tablecloths, curtains, etc.
Do not expose the appliance to naked flame sources (for example, lighted candles).

A-1016-0005

To reduce the risk of fire or electric shock, do not expose this appliance to dripping or splashing, and do not place objects filled with liquids, such as vases, on the appliance.

A-1020-0001

As the main plug is used to disconnect the unit from the mains, connect the unit to an easily accessible AC outlet. Should you notice an abnormality in the unit, disconnect the main plug from the AC outlet immediately.

A-1018-0001

Do not install the appliance in a confined space, such as a bookcase or built-in cabinet.

A-1025-0002

Do not expose batteries or appliances with battery-installed to excessive heat, such as sunshine and fire.

Indoor use only.

For the customers in the U.S.A.

A-1017-0002

The Caution Marking is put on the Bottom Enclosure (For the Bar Speaker).

A-1017-0001

This symbol is intended to alert the user to the presence of uninsulated "dangerous voltage" within the product's enclosure that may be of sufficient magnitude to constitute a risk of electric shock to persons.

This symbol is intended to alert the user to the presence of important operating and maintenance (servicing) instructions in the literature accompanying the appliance.

A-1024-0001

For the Bar Speaker
The nameplate and the date of manufacture marking are located on the bottom.

A-1110-0001

Important Safety Instructions

1) Read these instructions.
2) Keep these instructions.
3) Heed all warnings.
4) Follow all instructions.
5) Do not use this apparatus near water.
6) Clean only with dry cloth.
7) Do not block any ventilation openings. Install in accordance with the manufacturer's instructions.
8) Do not install near any heat sources such as radiators, heat registers,

A-1110-0001
つづき

stoves, or other apparatus (including amplifiers) that produce heat.

9) Do not defeat the safety purpose of the polarized or grounding-type plug. A polarized plug has two blades with one wider than the other. A grounding type plug has two blades and a third grounding prong. The wide blade or the third prong are provided for your safety. If the provided plug does not fit into your outlet, consult an electrician for replacement of the obsolete outlet.
10) Protect the power cord from being walked on or pinched particularly at plugs, convenience receptacles, and the point where they exit from the apparatus.
11) Only use attachments/accessories specified by the manufacturer.
12) Use only with the cart, stand, tripod, bracket, or table specified by the manufacturer, or sold with the apparatus. When a cart is used, use caution when moving the cart/apparatus combination to avoid injury from tip-over.

13) Unplug this apparatus during lightning storms or when unused for long periods of time.
14) Refer all servicing to qualified service personnel. Servicing is required when the apparatus has been damaged in any way, such as power-supply cord or plug is damaged, liquid has been spilled or objects have fallen into the apparatus, the apparatus has been exposed to rain or moisture, does not operate normally, or has been dropped.

A-1002-0001

The following FCC statement applies only to the version of this model manufactured for sale in the U.S.A.

Other versions may not comply with FCC technical regulations.

GB

A-1004-0001

NOTE:
This equipment has been tested and found to comply with the limits for a Class B digital device, pursuant to Part 15 of the FCC Rules. These limits are designed to provide reasonable protection against harmful interference in a residential installation. This equipment generates, uses, and can radiate radio frequency energy and, if not installed and used in accordance with the instructions, may cause harmful interference to radio communications.
However, there is no guarantee that interference will not occur in a particular installation. If this equipment does cause harmful interference to radio or television reception, which can be determined by turning the equipment off and on, the user is encouraged to try to correct the interference by one or more of the following measures:
– Reorient or relocate the receiving antenna (aerial).
– Increase the separation between the equipment and receiver.
– Connect the equipment into an outlet on a circuit different from that to which the receiver is connected.
– Consult the dealer or an experienced radio/TV technician for help.

CAUTION

A-1003-0001

You are cautioned that any changes or modifications not expressly approved in this manual could void your authority to operate this equipment.

A-1008-0001

This equipment must not be co-located or operated in conjunction with any other antenna or transmitter.

A-1009-0001

This equipment complies with FCC radiation exposure limits set forth for an uncontrolled environment and meets

A-1009-0001
つづき

the FCC radio frequency (RF) Exposure Guidelines. This equipment has very low levels of RF energy that it deemed to comply without maximum permissive exposure evaluation (MPE). But it is desirable that it should be installed and operated keeping the radiator at least 20cm or more away from person's body (excluding extremities: hands, wrists, feet and ankles).

For the customers in Canada

A-1011-0001

This device complies with Industry Canada licence-exempt RSS standard(s).
Operation is subject to the following two conditions:
(1) this device may not cause interference, and (2) this device must accept any interference, including interference that may cause undesired operation of the device.

A-1012-0001

This equipment complies with IC radiation exposure limits set forth for an uncontrolled environment and meets RSS-102 of the IC radio frequency (RF) Exposure rules.

This equipment has very low levels of RF energy that it deemed to comply without maximum permissive exposure evaluation (MPE). But it is desirable that it should be installed and operated keeping the radiator at least 20cm or more away from person's body (excluding extremities: hands, wrists, feet and ankles).

Copyrights and Trademarks

This system incorporates Dolby* Digital Surround System.

L-0010-0002

* Manufactured under license from Dolby Laboratories.
Dolby, and the double-D symbol are trademarks of Dolby Laboratories.

L-0040-0002

The BLUETOOTH® word mark and logos are registered trademarks owned by Bluetooth SIG, Inc. and any use of such marks by Sony Corporation is under license.

L-0053-0002

The N Mark is a trademark or registered trademark of NFC Forum, Inc. in the United States and in other countries.

LP-1200-0001

Android is a trademark of Google Inc.

"ClearAudio+" is a trademark of Sony Corporation.

Other trademarks and trade names are those of their respective owners.

About these operating instructions

- The instructions in these Operating Instructions describe the controls on the remote control. You can also use the controls on the main unit if they have the same or similar names as those on the remote control.
- Some illustrations are presented as conceptual drawings, and may be different from the actual products.

Table of Contents

Connecting ➡ Startup Guide (separate document)

About these operating instructions 5

Listening

Listening to sound from a TV, Blu-ray Disc player, cable/satellite box, etc. 7
Listening to music from a BLUETOOTH device 7

Sound Adjustment

Enjoying sound effects 8

BLUETOOTH Functions

Listening to music from a BLUETOOTH device 9
Turning on or off the BLUETOOTH function 10
Setting the BLUETOOTH standby mode 10

Other Functions

Enabling the Secure Link function 11
Mounting the Bar Speaker on a wall 11

Additional Information

Precautions 13
Troubleshooting 14
Guide to parts and controls 18
Playable types of files 21
Supported audio formats 21
Specifications 22
On BLUETOOTH communication 24

Listening to sound from a TV, Blu-ray Disc player, cable/satellite box, etc.

Press the input button of the jack to which you connected the device you want to listen.
The indicator of the selected device lights up.

OPTICAL button	TV that is connected to the OPTICAL jack
ANALOG button	Analog device that is connected to the ANALOG jack
(BLUETOOTH) button	BLUETOOTH device that supports A2DP

Tip

- If you press INPUT on the Bar Speaker, the device changes cyclically as follows.
  OPTICAL → ANALOG → BLUETOOTH

Listening to music from a BLUETOOTH device

Refer to "BLUETOOTH Functions" (page 9).

Sound Adjustment

Enjoying sound effects

To set sound effects, press one of the sound effects buttons on the remote control.

Selecting the sound effects

Press SURROUND repeatedly during playback.
The surround effects change cyclically as follows.
CLEARAUDIO+ → SURROUND On → SURROUND Off

CLEARAUDIO+
The suitable sound setting is automatically selected for the sound source. The CLEARAUDIO+ and SURROUND indicators light up.

SURROUND On
Sounds are played back with surround effects. The SURROUND indicator lights up.

SURROUND Off
The input source is down-mixed for 2 channels. The CLEARAUDIO+ and SURROUND indicators turn off.

Setting the Night mode

Sound is output ~~at low volume~~ with minimum loss of fidelity and clarity of dialog.

Press NIGHT.
The ANALOG indicator flashes twice.
To inactivate the Night mode, press NIGHT again.

Setting the Voice mode

The Voice mode helps make dialogs clearer.

Press VOICE.
The ANALOG indicator flashes twice.
To inactivate the Voice mode, press VOICE again.

Selecting multiplex broadcast sound (Dual Mono)

You can enjoy multiplex broadcast sound when the system receives a Dolby Digital multiplex broadcast signal.

Press AUDIO repeatedly.
The channel changes cyclically as follows.
Main → Sub → Main/Sub

Main
Outputs only the main channel. The OPTICAL indicator flashes twice.

Sub
Outputs only the sub channel. The ANALOG indicator flashes twice.

Main/Sub
Main sound is output from the left speaker and sub sound is output from the right speaker. The OPTICAL and ANALOG indicators flash twice.

Setting Dolby DRC (Dynamic Range Control)

Useful for enjoying movies at low sound volume. DRC applies to Dolby Digital sources.

Hold AUDIO and VOICE down simultaneously for 5 seconds to turn on or off Dolby DRC.

On
Compresses sound in accordance with the information contained in the content. The ANALOG indicator flashes twice.

Off
Sound is not compressed. The OPTICAL indicator flashes twice.

Listening to music from a BLUETOOTH device

Pairing this system with a BLUETOOTH device

1 Press PAIRING on the system.
The BLUETOOTH indicator (blue) flashes.

2 Set the BLUETOOTH device in pairing mode and select "HT-CT180."
If a Passkey is requested, enter "0000."

3 Make sure that the BLUETOOTH indicator (blue) lights up.

Note

- You can pair up to 8 BLUETOOTH devices. If the 9th BLUETOOTH device is paired, the least recently connected device will be replaced by the new one.

4 Press (BLUETOOTH).
The BLUETOOTH indicator (blue) lights up.

5 Start playback on the BLUETOOTH device.

Connecting to a BLUETOOTH device by One-touch Function (NFC)

By holding an NFC-compatible remote device near to the N-Mark on the system, the system and remote device proceed to complete pairing and the BLUETOOTH connection automatically.

Compatible remote devices
Remote devices with a built-in NFC function
(OS: Android™ 2.3.3 – 4.x.x excluding Android 3.x)

1 Download, install, and start the "NFC Easy Connect" application.

Note

- The application may not be available in some countries/regions.

2 Hold the remote device near to the N-Mark on the system until the remote device vibrates.

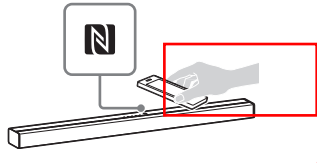

3 Make sure that the BLUETOOTH indicator (blue) lights up.
Connection has been established.

コメント:アラヤ>
手のイラストが見にくいです。

Note

- For some remote devices, this function may be available without downloading "NFC Easy Connect". In this case, the operation and specifications of the remote device may differ from the description in this manual.

Tip

- If pairing and the BLUETOOTH connection fail, do the following.
  - Relaunch "NFC Easy Connect" and move the remote device slowly over the N-Mark.
  - Remove the case from the remote device if using a commercially available remote device case.

Turning on or off the BLUETOOTH function

Hold SURROUND and CLEARAUDIO+ down simultaneously for 5 seconds.
On: The ANALOG indicator flashes twice.
Off: The OPTICAL indicator flashes twice.

Setting the BLUETOOTH standby mode

When the system has pairing information, the system is in BLUETOOTH standby mode even when it is turned off.

Hold STANDBY down for 5 seconds.
On: The ANALOG indicator flashes twice.
Off: The OPTICAL indicator flashes twice.

Notes

- If the system does not have pairing information, BLUETOOTH standby mode cannot be set.
- During BLUETOOTH standby mode, standby power consumption increases.

Enabling the Secure Link function

You can specify the wireless connection to link the Bar Speaker to the subwoofer using the Secure Link function. This function can help prevent interference if you use multiple wireless products or your neighbors use wireless products.

1 **Press LINK on the rear of the subwoofer with a pointed object, such as a pen.**

You will hear beeps from the subwoofer.

2 **Hold down PAIRING on the Bar Speaker for 5 seconds, then VOL– for 5 seconds.**

The OPTICAL and ANALOG indicators flash alternately.
When the Bar Speaker is linked to the subwoofer, the indicators stop flashing.
If it failed, the indicators light up for 5 seconds. Try again the above operation.

Mounting the Bar Speaker on a wall

You can mount the Bar Speaker on a wall.

Notes

- Prepare screws (not supplied) that are suitable for the wall material and strength. As a plasterboard wall is especially fragile, attach the screws securely to two studs in the wall beam. Install the Bar Speaker horizontally, hung by screws in studs in a continuous flat section of the wall.
- Be sure to subcontract the installation to Sony dealers or licensed contractors and pay special attention to safety during the installation.
- Sony shall not be held responsible for accidents or damage caused by improper installation, insufficient wall strength, improper screw installation or natural calamity, etc.

1 **Prepare screws (not supplied) that are suitable for the holes on the rear of the Bar Speaker.**

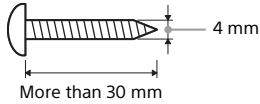

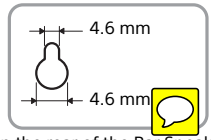

Hole on the rear of the Bar Speaker

2 **Fasten the screws to 2 studs in the wall.**

The screws should protrude by 8 mm to 9 mm.

数値をお願いします。

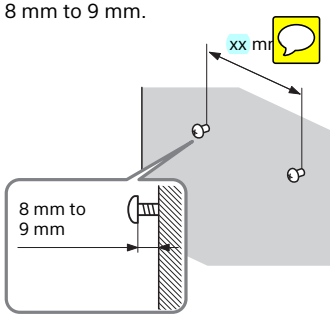

3 **Hang the Bar Speaker on the screws.**

Align the holes at the rear of the Bar Speaker with the screws, then hang the Bar Speaker on the two screws.

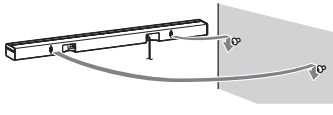

Precautions

On safety

- Should any solid object or liquid fall into the system, unplug the system and have it checked by qualified personnel before operating it any further.
- Do not climb on the Bar Speaker and subwoofer, as you may fall down and injure yourself, or system damage may result.

On power sources

- Before operating the system, check that the operating voltage is identical to your local power supply. The operating voltage is indicated on the nameplate on the bottom of the Bar Speaker.
- If you are not going to use the system for a long time, be sure to disconnect the system from the wall outlet (mains). To disconnect the AC power cord (mains lead), grasp the plug itself; never pull the cord.
- One blade of the plug is wider than the other for the purpose of safety and will fit into the wall outlet (mains) only one way. If you are unable to insert the plug fully into the outlet, contact your dealer.
- AC power cord (mains lead) must be changed only at a qualified service shop.

On heat buildup

Although the system heats up during operation, this is not a malfunction.
If you continuously use this system at high volume, the system temperature at the rear and bottom rises considerably. To avoid burning yourself, do not touch the system.

On placement

- Place the system in a location with adequate ventilation to prevent heat buildup and prolong the life of the system.
- Do not place the system near heat sources or in a place subject to direct sunlight, excessive dust, or mechanical shock.
- Do not place anything at the rear of the Bar Speaker and subwoofer that might block the ventilation holes and cause malfunctions.
- If the system is being used in combination with a TV, VCR, or tape deck, noise may result and picture quality may suffer. In such a case, place the system away from the TV, VCR, or tape deck.
- Use caution when placing the system on a surface that has been specially treated (with wax, oil, polish, etc.), as staining or discoloration of the surface may result.
- Take care to avoid any possible injury from the corners of the Bar Speaker and subwoofer.

On operation

Before connecting other equipment, be sure to turn off and unplug the system.

If you encounter color irregularity on a nearby TV screen

Color irregularities may be observed on certain types of TV.

- If color irregularity is observed...
  Turn off the TV, then turn it on again after 15 to 30 minutes.
- If color irregularity is observed again...
  Place the system further away from the TV.

On cleaning

Clean the system with a soft, dry cloth. Do not use any type of abrasive pad, scouring powder, or solvent such as alcohol or benzine.

If you have any question or problem concerning your system, please consult your nearest Sony dealer.

Troubleshooting

If you experience any of the following difficulties while using the system, use this troubleshooting guide to help remedy the problem before requesting repairs. Should any problem persist, consult your nearest Sony dealer.

General

The power does not turn on.

→ Check that the AC power cord (mains lead) is connected securely.

The system does not work normally.

→ Disconnect the AC power cord (mains lead) from the wall outlet (mains), then reconnect after several minutes.

Sound

No TV sound is output from the system.

→ Press the input button of the jack to which you connected the TV (page 7).

→ Check the sound output of the TV. Refer to the operating instructions of the TV for the TV settings.

→ Increase the volume on the TV or cancel muting.

The sound is output from both the system and the TV.

→ Turn off the sound of the TV.

The TV sound from this system lags behind the image.

→ When you are watching movies, you may hear the sound with a slight delay from the image.

No sound or only a very low-level sound of the device connected to the Bar Speaker is heard from the Bar Speaker.

→ Press the ◿ + button on the remote control and check the volume level (page 18).

→ Press the 🔇 or ◿ + button on the remote control to cancel the muting function (page 18).

→ Make sure the input source is selected correctly. You should try other input sources by pressing a different input button on the remote control (page 7).

→ Check that all the cables and cords of the system and the connected device are firmly inserted.

No sound or only a very low-level sound is heard from the subwoofer.

→ Press the SW◿ + button on the remote control to increase the subwoofer volume (page 18).

→ Make sure that the on/standby indicator on the subwoofer is lit in green. If not, refer to “No sound is heard from the subwoofer.” in “Wireless sound” (page 15).

→ A subwoofer is for reproducing bass sound. In the case of input sources that contain very little bass sound components (i.e., a TV broadcast), the sound from the subwoofer may be difficult to hear.

→ When you play content compatible with copyright protection technology (HDCP), it is not output from the subwoofer.

The surround effect cannot be obtained.

→ Depending on the input signal and the sound field setting, surround sound processing may not work effectively. The surround effect may be subtle, depending on the program or disc.

→ To play multi channel audio, check the digital audio output setting on the device connected to the system. For details, refer to the operating instructions supplied with the connected device.

BLUETOOTH device

BLUETOOTH connection cannot be completed.

→ Make sure that the BLUETOOTH indicator (blue) is lit (page 18).

System status	BLUETOOTH indicator (blue)
During BLUETOOTH pairing	Flashes quickly
The system is attempting to connect with a BLUETOOTH device	Flashes
The system has established connection with a BLUETOOTH device	Lit
The system is in BLUETOOTH standby mode (when the system is off)	Unlit

→ Make sure the BLUETOOTH device to be connected is turned on and the BLUETOOTH function is enabled.
→ Bring this system and the BLUETOOTH device closer together.
→ Pair this system and the BLUETOOTH device again. You may need to cancel the pairing with this system using your BLUETOOTH device first.
→ If the BLUETOOTH function is turned off, turn it on (page 10).

Pairing cannot be achieved.

→ Bring this system and the BLUETOOTH device closer together.
→ Make sure this system is not receiving interference from a wireless LAN equipment, other 2.4 GHz wireless devices, or a microwave oven. If a device that generates electromagnetic radiation is nearby, move the device away from this system.

No sound is output from the connected BLUETOOTH device.

→ Make sure that the BLUETOOTH indicator (blue) is lit (page 18).
→ Bring this system and the BLUETOOTH device closer together.
→ If a device that generates electromagnetic radiation, such as a wireless LAN equipment, other BLUETOOTH devices, or a microwave oven is nearby, move the device away from this system.
→ Remove any obstacle between this system and the BLUETOOTH device or move this system away from the obstacle.
→ Reposition the connected BLUETOOTH device.
→ Try changing the wireless frequency of the Wi-Fi router, computer, etc. to 5 GHz band.
→ Increase the volume on the connected BLUETOOTH device.

The sound is not in sync with the image.

→ When you are watching movies, you may hear the sound with a slight delay from the image.

Wireless sound

No sound is heard from the subwoofer. SGの参照先

→ Check that the AC power cord (mains lead) of the subwoofer is connected properly. (Refer to the supplied Startup Guide.)

→ The on/standby indicator does not light.
  – Check that the AC power cord (mains lead) of the subwoofer is connected properly.
  – Press the I/⏻ (on/standby) button of the subwoofer to turn on the power.
→ The on/standby indicator flashes slowly in green or lights in red.
  – Move the subwoofer to a location near the Bar Speaker so that the on/standby indicator lights in green.
  – Follow the steps in "Enabling the Secure Link function" (page 11).
→ The on/standby indicator flashes quickly in green.
  – Consult your nearest Sony dealer.
→ The on/standby indicator flashes in red.
  – Press the I/⏻ (on/standby) button of the subwoofer to turn off the power and check whether the ventilation opening of the subwoofer is blocked or not.
→ The subwoofer is designed for playback of bass sound. When the input source does not contain much of bass sound, as is the case with most TV programs, the bass sound may not be audible.
→ Press the SW ◿ + button on the remote control to increase the volume of the subwoofer (page 20).

Sound skips or has noise.
→ If there is a device nearby that generates electromagnetic waves like a wireless LAN or an electronic oven in use, locate the system apart from it.
→ If there is an obstacle between the Bar Speaker and the subwoofer, move or remove it.
→ Locate the Bar Speaker and the subwoofer as close as possible.
→ Switch the wireless LAN frequency of any nearby Wi-Fi router or personal computer to 5 GHz band.

Remote control

The remote control does not function.
→ Point the remote control at the center of the front panel (remote control sensor) of the system (page 18).
→ Remove any obstacles in the path between the remote control and the system.
→ Replace both batteries in the remote control with new ones, if they are weak.
→ Make sure you are pressing the correct button on the remote control.

Others

Sensors of the TV do not work properly.
→ The Bar Speaker may block some sensors (such as the brightness sensor) and the remote control receiver of your TV, or the "emitter for 3D glasses (infrared transmission)" of a 3D TV that supports the infrared 3D glass system. Move the Bar Speaker away from the TV within a range that allow those parts to operate properly. For the locations of the sensors and remote control receiver, refer to the operating instructions supplied with the TV.

Reset

If the system still does not operate properly, reset the system as follows:

1. **While pressing the I/⏻ (on/standby) button on the system, press the INPUT and VOL+ buttons simultaneously.**
   All 5 indicators on the Bar Speaker flash 3 times, and the settings return to their initial status.
2. **Disconnect the AC power cord (mains lead).**

Guide to parts and controls

For more information, refer to the pages indicated in parentheses.

Bar Speaker

裏面以外全部ですので、削除しました。

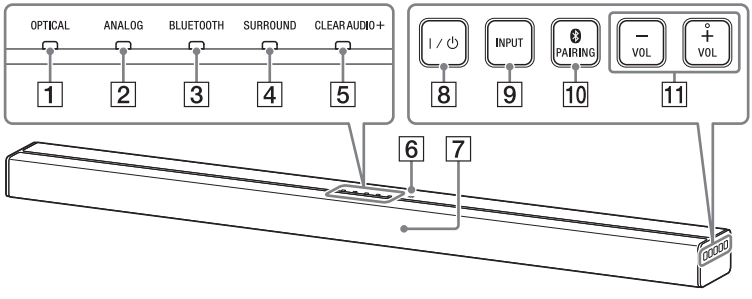

1 **OPTICAL indicator (page 7)**

2 **ANALOG indicator (page 7)**

3 **BLUETOOTH indicator (blue)**
BLUETOOTH status
– During BLUETOOTH pairing: Flashes quickly
– BLUETOOTH connection is being attempted: Flashes
– BLUETOOTH connection has been established: Lit
– BLUETOOTH standby mode (when the system is off): Unlit

4 **SURROUND indicator (page 8)**

5 **CLEARAUDIO+ indicator (page 8)**

6 **N-Mark (page 9)**
Position the NFC-compatible device near this indication to activate the NFC function.

7 **Remote control sensor**

8 **I/⏻ (on/standby) button**
Turns on the system, or sets it to standby mode.

9 **INPUT button (page 7)**

10 **PAIRING button (page 9, 11)**

11 **VOL (volume) +/– buttons**

Rear panel

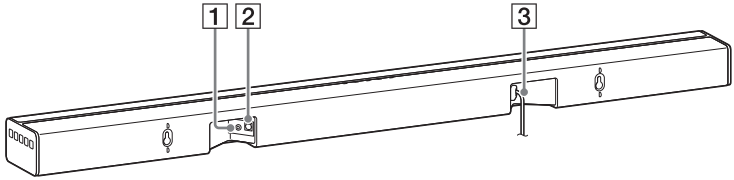

1 **ANALOG jack**
2 **OPTICAL jack**
3 **AC power cord (mains lead)**

Subwoofer

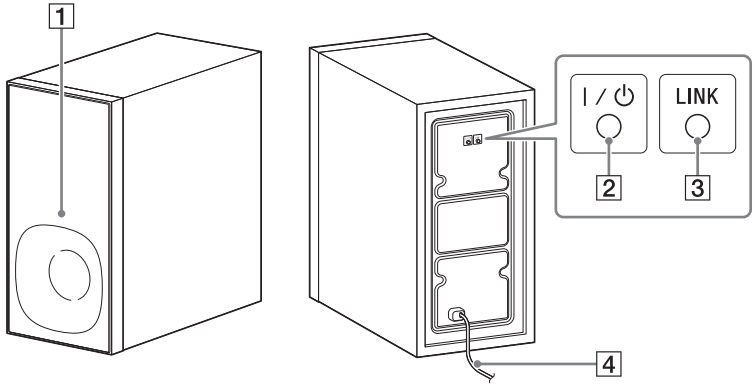

1 **On/standby indicator**
2 **I/⏻ (on/standby) button**
3 **LINK button (page 11)**
4 **AC power cord (mains lead)**

Remote control

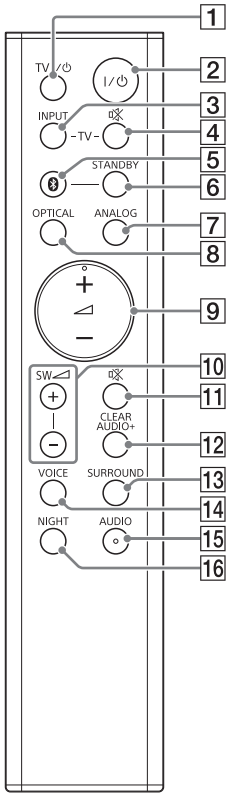

1 **TV I/⏻ (on/standby) button button**
2 **I/⏻ (on/standby) button**
3 **TV INPUT button**
4 **TV 🔇 (muting) button**
5 **ᛒ (BLUETOOTH) button (page 7)**
6 **STANDBY button (page 10)**
7 **ANALOG button (page 7)**
8 **OPTICAL button (page 7)**
9 **◿ (volume) +*/– buttons**
Adjusts the volume.
10 **SW ◿ (subwoofer volume) +/– buttons**
Adjusts the volume of bass sound.
11 **🔇 (muting) button**
Turns off the sound temporarily.
12 **CLEARAUDIO+ button**
Automatically selects the suitable sound setting for the sound source.
13 **SURROUND button (page 8)**
14 **VOICE button (page 8)**
15 **AUDIO* button (page 8)**
16 **NIGHT button (page 8)**

* The AUDIO and ◿ + buttons have a tactile dot. Use it as a guide during operation.

Controlling a connected TV

You can control a Sony TV connected to the system with the following buttons.

1 **TV I/⏻ (on/standby) button**
Turns on or off the TV.
3 **TV INPUT button**
Selects the input signal.
4 **TV 🔇 (muting) button**
Turns off the sound temporarily.

Playable types of files

Codec	Extension
MP3 (MPEG-1 Audio Layer III)	.mp3
AAC/HE-AAC	.m4a, .aac
WMA9 Standard	.wma
LPCM	.wav
FLAC	.flac, .fla
Dolby Digital	.ac3

Notes

- Some files edited on a PC may not play.
- Some files may not be able to perform fast forward or fast reverse function.
- The system does not play coded files such as DRM and Lossless.
- The system can recognize the following files or folders in USB devices:
  - up to folders in the 9th layer (including the root folder)
  - up to 500 files/folders in a single layer
- Some USB devices may not work with this system.
- The system can recognize Mass Storage Class (MSC) devices (such as flash memory or an HDD), Still Image Capture Devices (SICDs), and 101-key keyboards.

Supported audio formats

Audio formats supported by this system are as follows.

- Dolby Digital
- Dolby Digital Plus*
- Dolby TrueHD*
- Linear PCM 2ch 48 kHz or less
- Linear PCM Maximum 7.1ch 192 kHz or less*

* It is possible to input these formats only with HDMI connection.

項目、数値をお願いします。

Specifications

Bar Speaker

Amplifier section

U.S. models:
POWER OUTPUT AND TOTAL HARMONIC DISTORTION:
(FTC)
Front L + Front R:
With xx ohms loads, both channels driven, from xx Hz - xx Hz; rated xx Watts per channel minimum RMS power, with no more than 1% total harmonic distortion from 250 milliwatts to rated output.
POWER OUTPUT (reference)
Front L/Front R speaker:
xx Watts (per channel at xx ohms, 1 kHz)

Canadian models:
POWER OUTPUT (rated)
Front L + Front R:
xx W + xx W (at xx ohms, 1 kHz, 1% THD)
POWER OUTPUT (reference)
Front L/Front R speaker:
xx Watts (per channel at xx ohms, 1 kHz)

Inputs
OPTICAL
ANALOG

BLUETOOTH section

Communication system
BLUETOOTH Specification version 4.0
Output
BLUETOOTH Specification Power Class 2
Maximum communication range
Line of sight approx. 10 m (33 ft)[1)]
Maximum number of devices to be registered
8 devices
Frequency band
2.4 GHz band (2.4000 GHz - 2.4835 GHz)
Modulation method
FHSS (Freq Hopping Spread Spectrum)
Compatible BLUETOOTH profiles[2)]
Compatible BLUETOOTH profiles[2)]
A2DP (Advanced Audio Distribution Profile)
Supported Codecs[3)]
SBC[4)]
Transmission range (A2DP)
20 Hz - 20,000 Hz (Sampling frequency 44.1 kHz)

[1)] The actual range will vary depending on factors such as obstacles between devices, magnetic fields around a microwave oven, static electricity, cordless phone, reception sensitivity, operating system, software application, etc.
[2)] BLUETOOTH standard profiles indicate the purpose of BLUETOOTH communication between devices.
[3)] Codec: Audio signal compression and conversion format
[4)] Subband Codec

Speakers

Front L/Front R speaker section

Speaker system
2-way speaker system, Acoustic suspension
Speaker
Tweeter: xx mm - xx mm (xx in - xx in) balance drive
Woofer: xx mm × xx mm (xx in × xx in) cone type
~~Rated impedance~~
~~xx ohms~~

General

Power requirements
120 V AC, 60 Hz
Power consumption
On: xx W
Standby mode: xx W or less
BLUETOOTH Standby mode: xx W or less
Dimensions (approx.) (w/h/d)
xx mm × xx mm × xx mm
(xx in × xx in × x in)
Mass (approx.)
xx kg (xx lb × xx oz)

Subwoofer

POWER OUTPUT (reference)
xx W (per channel at 4 ohms, 100 Hz)
Speaker system
Subwoofer system, Bass reflex
Speaker
xx mm × xx mm (xx in × xx in) cone type
~~Rated impedance~~
~~xx ohms~~
Power requirements
120 V AC, 60 Hz
Power consumption
On: xx W
Standby mode: xx W or less
Dimensions (approx.) (w/h/d)
xx mm × xx mm × xx mm
(xx in × xx in × xx in)
Mass (approx.)
xx kg (xx lb × xx oz)

Design and specifications are subject to change without notice.

130mm(5 1/8 in) cone type

On BLUETOOTH communication

- BLUETOOTH devices should be used within approximately 10 meters (33 feet) (unobstructed distance) of each other. The effective communication range may become shorter under the following conditions.
  - When a person, metal object, wall or other obstruction is between the devices with a BLUETOOTH connection
  - Locations where a wireless LAN is installed
  - Around microwave ovens that are in use
  - Locations where other electromagnetic waves occur
- BLUETOOTH devices and wireless LAN (IEEE 802.11b/g) use the same frequency band (2.4 GHz). When using your BLUETOOTH device near a device with wireless LAN capability, electromagnetic interference may occur. This could result in lower data transfer rates, noise, or inability to connect. If this happens, try the following remedies:
  - Use this system at least 10 meters (33 feet) away from the wireless LAN device.
  - Turn off the power to the wireless LAN device when using your BLUETOOTH device within 10 meters (33 feet).
  - Install this system and BLUETOOTH device as closer to each other as possible.
- The radio waves broadcast by this system may interfere with the operation of some medical devices. Since this interference may result in malfunction, always turn off the power on this system and BLUETOOTH device in the following locations:
  - In hospitals, on trains, in airplanes, at gas stations, and any place where flammable gasses may be present
  - Near automatic doors or fire alarms
- This system supports security functions that comply with the BLUETOOTH specification to ensure secure connection during communication using BLUETOOTH technology. However, this security may be insufficient depending on the setting contents and other factors, so always be careful when performing communication using BLUETOOTH technology.
- Sony cannot be held liable in any way for damages or other loss resulting from information leaks during communication using BLUETOOTH technology.
- BLUETOOTH communication is not necessarily guaranteed with all BLUETOOTH devices that have the same profile as this system.
- BLUETOOTH devices connected with this system must comply with the BLUETOOTH specification prescribed by the Bluetooth SIG, Inc., and must be certified to comply. However, even when a device complies with the BLUETOOTH specification, there may be cases where the characteristics or specifications of the BLUETOOTH device make it impossible to connect, or may result in different control methods, display or operation.
- Noise may occur or the audio may cut off depending on the BLUETOOTH device connected with this system, the communications environment, or surrounding conditions.

If you have any questions or problems concerning your system, please consult your nearest Sony dealer.

http://www.sony.net/

* 4 5 5 9 0 2 6 1 1 * (1)

©2015 Sony Corporation Printed in China

4-559-026-**11**(1)