ACCESSNET®-T IP
DIB-R5 outdoor

Digital Integrated Base Station
Installation Manual

© 2021 Hytera Mobilfunk GmbH

90DIBR5outdoorIM02- 5.1

Hytera Mobilfunk GmbH
Fritz-Hahne-Strasse 7
31848 Bad Münder
Germany
Telephone: +49 5042 / 998-0
Fax: +49 5042 / 998-105
E-mail: info@hytera.de
Internet: www.hytera-mobilfunk.com

Read the instructions thoroughly prior to performing any tasks!

Keep these instructions for reference.

Subject to change without notice. Data without tolerance limits is not binding.

ACCESSNET is a registered trademark of Hytera Mobilfunk GmbH. HYT and Hytera are registered trademarks of Hytera Communications Corporation Limited.

Table of contents

1 Notes on the document ... **9**
1.1 Objectives of the document ... **9**
1.2 Intended audience of the document ... **9**
1.3 Qualification of personnel ... **10**
1.4 Reading and navigation aids in the document ... **10**
1.5 Figures and special notations used ... **10**
1.5.1 Figures used ... 10
1.5.2 Special notations ... 10
1.5.2.1 Operating procedures ... 11
1.5.2.2 Safety instructions used ... 11
1.5.2.3 General instructions used ... 12
1.5.2.4 Text formatting used ... 12
1.6 History of changes ... **13**
1.7 Further applicable documents ... **14**
1.8 Support information ... **15**
2 Safety regulations ... **17**
2.1 Safety instructions and declaration of conformity ... **17**
2.1.1 Safety instructions and declaration of conformity for Europe ... 17
2.1.2 Safety instructions and declaration of conformity for North America ... 19
2.2 Intended use ... **21**
2.3 RF Radiation Information ... **21**
2.3.1 RF Radiation Profile ... 21
2.3.2 RF Radiation Safety ... 21
2.4 Safety measures ... **22**
2.4.1 Authorized personnel ... 23
2.4.2 Electromagnetic compatibility ... 23
2.4.2.1 Electromagnetic compatibility for Europe ... 23
2.4.2.2 Electromagnetic compatibility for North America ... 24
2.4.3 Notes on the electrical system ... 24
2.4.4 Hazardous substances ... 25
2.4.4.1 Hazardous substances in Europe ... 25
2.4.4.2 Hazardous substances outside Europe ... 25
2.4.5 Product disposal ... 25
2.4.5.1 Product disposal in Europe ... 26

2.4.5.2 Product disposal outside Europe ... 26
2.5 Safety and responsibility ... 26
2.6 Safety markings ... 28
2.6.1 Safety markings on the product ... 28
2.6.2 Safety markings on transport boxes ... 28
2.6.2.1 Safety marking "Fragile" ... 29
2.6.2.2 Safety marking "Transport Upright" ... 29
2.6.2.3 Safety marking "Keep dry" ... 30
3 Product description ... 31
3.1 DIB-R5 outdoor ... 32
3.2 Connection board (slider unit) ... 36
3.2.1 Connection board IFB6 ... 36
3.2.2 Connection board IFB9 ... 38
3.3 Mounting bracket ... 41
3.4 Interfaces ... 43
3.5 Wiring ... 44
3.6 Overview of function blocks ... 45
3.6.1 Base Station Function (BSF) ... 46
3.6.2 Switching Controller Function (SCF) ... 46
3.6.3 TETRA Vocoder Function (TVF) ... 46
3.6.4 Application Gateway (AGW) ... 46
3.6.5 Packet Data Gateway (PGW) ... 47
3.6.6 Telephony Gateway (TGW) ... 47
3.7 Redundancy options ... 47
3.7.1 Redundant main control channel (MCCH) ... 48
3.7.2 Carrier redundancy ... 48
3.7.3 Controller redundancy ... 48
3.7.4 Fallback operation ... 48
3.8 Order information ... 49
4 Transport and storage ... 51
4.1 Safety measures and prerequisites ... 51
4.2 Tools, Aids and Materials ... 51
4.3 Transporting the product ... 51
4.3.1 Transporting the DIB-R5 outdoor ... 52
4.3.2 Carrying the DIB-R5 outdoor ... 52
4.4 Storage ... 52
5 Site requirements for the DIB-R5 outdoor ... 53

5.1 Mounting requirements ... **53**
5.2 General requirements ... **54**
5.3 Environment ... **54**
5.3.1 Contamination ... 55
5.4 Antennas ... **56**
5.4.1 Preparation of the antenna system ... 56
5.4.2 Requirements of the GNSS antenna (recommended) ... 57
5.5 Grounding ... **58**
5.6 Requirements for the electric system ... **58**
5.6.1 Overvoltage protection ... 59
5.6.1.1 Overvoltage protection of the product ... 59
5.6.1.2 Overvoltage protection of the power supply (V_{DC}) ... 59
5.6.1.3 Overvoltage protection of the supply lines ... 60
5.6.2 Cable requirements and cable specifications ... 61
5.6.2.1 General cable requirements ... 61
5.6.2.2 Cable specifications of power supply cables ... 62
5.6.2.3 Cable specifications for the data and RF cables ... 63
5.6.3 Power supply ... 63
5.6.3.1 Power supply (V_{DC}) ... 64
5.6.3.1.1 Power supply connector (V_{DC}) ... 64
5.6.3.1.2 Fuse protection (V_{DC}) ... 65
5.7 Requirements on IP transport networks ... **65**
6 Configuration ... **67**
6.1 Safety measures and prerequisites ... **67**
6.2 Configuring the DIB-R5 outdoor ... **68**
6.2.1 Work equipment ... 68
6.2.2 Preparatory measures ... 68
6.2.2.1 Connecting the service computer ... 69
6.2.2.2 Deleting the ARP buffer ... 69
6.2.3 Software download via platform image web client (initial configuration) ... 70
7 Setup and commissioning ... **71**
7.1 Safety measures and prerequisites ... **72**
7.2 Tools, Aids and Materials ... **72**
7.3 Installing the DIB-R5 outdoor ... **73**
7.3.1 Installing the mounting bracket ... 74
7.3.1.1 Installing the lock into the mounting bracket ... 74
7.3.1.2 Installing the mounting bracket to a wall ... 74

7.3.1.3 Installing the mounting bracket to a mast ... 76
7.3.2 Mounting and removing the DIB-R5 outdoor into/from the mounting bracket ... 78
7.3.3 Connecting the DIB-R5 outdoor to the grounding system ... 79
7.3.4 Wiring the connection board ... 80
7.3.4.1 Removing the connection board ... 80
7.3.4.2 Checking the mode of the unit ... 81
7.3.4.3 Connecting the V_{DC} power supply ... 81
7.3.4.3.1 Connection board IFB6 ... 81
7.3.4.3.2 Connection board IFB9 ... 82
7.3.4.4 Connecting external inputs ... 82
7.3.4.5 Connecting the network connections ... 83
7.3.4.5.1 Connection board IFB6 ... 83
7.3.4.5.2 Connection board IFB9 ... 84
7.3.4.6 Sliding the connection board into the housing ... 84
7.3.4.6.1 Connection board IFB6 ... 84
7.3.4.6.2 Connection board IFB9 ... 85
7.4 Connecting units ... 85
7.5 Installing the GNSS antenna ... 86
7.6 Connecting antennas (GNSS and TETRA) ... 87
7.7 Switching on the DIB-R5 outdoor ... 88
8 Service interruption ... 91
8.1 Switching off the DIB-R5 outdoor ... 91
8.2 Permanent service interruption ... 92
9 Maintenance ... 95
9.1 Maintenance tasks ... 95
9.2 Periodical visual inspections ... 95
10 Component replacement ... 97
10.1 Safety measures and prerequisites ... 97
10.2 Tools, Aids and Materials ... 97
10.3 Replacing the connection board (slider unit) ... 97
10.4 Replacing a DIB-R5 outdoor unit ... 98
11 System restore ... 99
11.1 Safety measures and prerequisites ... 99
11.2 Tools, Aids and Materials ... 99
11.3 System restore of a unit ... 100
11.3.1 Removing the SD card ... 100
11.3.2 Updating the SD card ... 101

11.3.3 Installing the SD card 101
11.4 Performing a download via the Network Element Manager 102
12 Function tests and operational monitoring 105
12.1 Work equipment for function tests 106
12.2 Checking the status of the DIB-R5 outdoor 107
12.2.1 Connection board IFB6 107
12.2.2 Connection board IFB9 107
12.3 Displaying states using the Network Element Manager 107
12.4 Checking the availability 108
12.5 Checking voice channels 109
12.6 Checking standby carriers – optional 111
12.7 Checking GNSS 111
12.7.1 Checking the installation site of the GNSS antenna 111
12.7.2 GNSS operational monitoring 112
12.7.3 Function tests and GNSS fault analysis 113
12.8 VSWR and reflected power sensors 114
13 Troubleshooting 115
14 Index 117

1 Notes on the document

This chapter provides information on using the document. In addition, it specifies requirements that are absolutely necessary when working with the product.

1.1 Objectives of the document

The present document describes the procedures that are required for the activities on and with the product:

- Transport
- Storage
- Setup at the site
- Commissioning
- Configuration
- Function tests
- Service interruption

In this context, it describes the relevant safety regulations as well as the components and operation of the product that is used in the ACCESSNET-T IP mobile radio system.

1.2 Intended audience of the document

The present document reverts to all the persons, who:

- operate an ACCESSNET-T IP TETRA mobile radio system
- transport and store the product,
- set up the product on site,
- connect the electrical system of the product on site,
- connect the antenna and all other connections to the product on site,
- commission the product,
- perform function tests,
- decommission the product.

Each person commissioned with performing the tasks mentioned above with or on the system must have read and understood the present document and the associated accompanying documentation.

1.3 Qualification of personnel

Only experts are permitted to perform the tasks described in the present document. The experts must be authorized to perform these tasks.

Experts are persons who:

- are trained and experienced in the corresponding field
- are familiar with the applicable standards, regulations and provisions associated with the corresponding task.

The experts must have the following training/qualification for the activities described:

- Electrician or
- comparable electrical training.

1.4 Reading and navigation aids in the document

As reading and navigation aids, overview tables have been provided at the beginning of the respective chapters in the present document. These are to provide the reader with an overview of the tasks to be performed. In addition, they indicate the order in which the tasks are to be performed. When you have completed a work step, always navigate to the next work step via the overview table to ensure that the tasks are performed in the correct order. The overview tables are useful for readers of the printed document (indication of the corresponding chapters) as well as for readers of a PDF document at the PC (via active cross-references to the corresponding chapters).

1.5 Figures and special notations used

Figures and symbols are used in the present document. They are used to illustrate the product and to emphasize particular pieces of information.

1.5.1 Figures used

The figures used in this document show the product, if necessary in a simplified form for clarity (e.g. technical drawings). They refer to different product designs. If not described otherwise, the respective figure relates to the standard product design.

1.5.2 Special notations

The special forms of notation described below are intended to make it easier to understand the information. They emphasize specific pieces of information, help you to recognize this information fast and take corresponding measures.

1.5.2.1 Operating procedures

The present document describes the tasks that have to be performed in the form of operating procedures. Standard operating procedures guide you step by step through a sequence of actions until you have reached the desired goal.

Example of a sequence of actions:

Goal of the actions

Preparation:

- List of the prerequisite(s) for an action
- ...

1. Description of the first of several work steps.

⇨ A possible result of the work step just performed.

2. Description of the second work step.

➔ Confirmation: Results of the entire sequence of actions.

1.5.2.2 Safety instructions used

Safety instructions in this document point to a hazard that may put persons or the product/system at risk.

Within a safety instruction, the following items are brought to your attention:

- Type of danger
- Source of danger
- Measures to be taken to avert the specified danger

Shown below are four security advice symbols which indicate the severity of the danger by means of different keywords (danger, warning, caution, attention). The symbols shown may vary depending on the nature and source of the danger.

⚠ DANGER

This symbol identifies security instructions

You are warned of an imminent danger for the life or health of persons.

➔ The arrow identifies a precautionary measure designed to avert this danger.

⚠ WARNING

This symbol identifies security instructions

You are warned of a potential danger for the life or health of persons.

➔ The arrow identifies a precautionary measure designed to avert this danger.

CAUTION

This symbol identifies security instructions

You are warned of a potentially dangerous situation for the life or health of persons.

➔ The arrow identifies a precautionary measure designed to avert this danger.

NOTICE

This symbol identifies security instructions.

You are warned of a danger for the product.

➔ The arrow identifies a precautionary measure designed to avert this danger.

1.5.2.3 General instructions used

General instructions provide supplementary and useful information.

Important Information

This symbol identifies information that may assist in handling and using the product. This includes references to further information.

1.5.2.4 Text formatting used

The following table provides an overview of the text formats used and describes the significance of these formats.

Table 1: Text formatting used

Text format examples	Description
■ *OK* button ■ *Settings* dialog	Designates components of the user interfaces of software components such as buttons and dialogs.
To do so, enter the following command: **Password**	Designates required inputs such as passwords and IP addresses.
The following output is displayed: `Get hytera sys info`	Designates output such as console output.
[F1] function key	Designates keys such as hardware keys and function keys.
"File ➔ Save as..."	Designates multilevel menu sequences.

Text format examples	Description
■ "firmware-update" script ■ "images/DIB-R5" directory	Designates file and directory names.
Document *ACCESSNET-T IP Release Notes*	Designates document titles.
Refer to *www.hytera-mobilfunk.com*	Designates links (Uniform Resource Locator, URL) such as those to websites.

1.6 History of changes

The following table identifies the changes made to a document.

Table 2: History of changes

Version	Date	Implemented changes	Refer to
5.1	2021-09-16	Updated	■ *Chapter 2.1.2 “Safety instructions and declaration of conformity for North America” on page 19* ■ *Chapter 2.3 “RF Radiation Information” on page 21* ■ *Chapter 3 “Product description” on page 31* ■ *Chapter 3.4 “Interfaces” on page 43* ■ *Chapter 3.5 “Wiring” on page 44* ■ *Chapter 3.7.1 “Redundant main control channel (MCCH)” on page 48* ■ *Chapter 3.7.3 “Controller redundancy” on page 48* ■ *Chapter 3.7.4 “Fallback operation” on page 48* ■ *Chapter 5.3 “Environment” on page 54* ■ *Chapter 5.6.1.1 “Overvoltage protection of the product” on page 59* ■ *Chapter 5.6.2.2 “Cable specifications of power supply cables” on page 62* ■ *Chapter 5.6.3 “Power supply” on page 63* ■ *Chapter 6 “Configuration” on page 67* ■ *Chapter 6.2.2.1 “Connecting the service computer” on page 69* ■ *Chapter 6.2.2.2 “Deleting the ARP buffer” on page 69* ■ *Chapter 11.4 “Performing a download via the Network Element Manager” on page 102* ■ *Chapter 12.3 “Displaying states using the Network Element Manager” on page 107* ■ *Chapter 12.4 “Checking the availability” on page 108*
		Added	■ *Chapter 2.4.2.2 “Electromagnetic compatibility for North America” on page 24* ■ *Chapter 2.4.4.1 “Hazardous substances in Europe” on page 25* ■ *Chapter 2.4.5.1 “Product disposal in Europe” on page 26*

1.7 Further applicable documents

Apart from the present documentation, the scope of delivery of the product includes additional documents. In addition to the contents of the present documentation, all the other documents associated with the product must always be taken into consideration. They are mandatory for the use of the product. If required, revert to Hytera Mobilfunk GmbH to request the other applicable documents.

These are:

- *DIB-R5 outdoor Technical Data*
  describe the technical properties of the product.
- *ACCESSNET-T IP Requirement Manual IP/VoIP*
  describes the requirements for securing the IP communication within ACCESSNET-T IP mobile radio networks as well as outside, e.g. via VoIP telephone systems (Voice-over-IP, VoIP).
- *ACCESSNET-T IP Installation Manual*
  describes the proper commissioning of the ACCESSNET-T IP.
- *Network Element Manager (NEM) User Manual*
  provides information required for proper operation of the Network Element Manager (NEM) and support troubleshooting.
- *Network Manager (NM) User Manual*
  provides information required for proper operation of the Network Manager (NM) and support troubleshooting.
- *Open Source Acknowledgement*
  contains information on the respective open source software the product comprises, including the information on the license(s) used and the related license agreements.
- *ACCESSNET-T IP Versions*
  contains information about all versions that are valid for the present PV, e.g. component versions of software components or document versions.
- Project-specific documents where applicable
  describe the implemented network and the associated properties and requirements.
- Third-party documents:
  – "UNI Split Gland® HD" cable glands *Assembly instructions* by PFLITSCH GmbH & Co. KG
    This document is attached to the present PDF file, refer to "AssemblyUNISplit-GlandHD.pdf"

Further applicable documents

Please also heed the documentation of the third-party devices connected to the product to prevent negative effects or problems with the product.

1.8 Support information

If you have any questions or proposals with regard to the products of Hytera Mobilfunk GmbH, please revert to your local service partner or directly to Hytera Mobilfunk GmbH.

For a fast and cost-effective solution of any technical problems that come up during the operation of your ACCESSNET-T IP mobile radio system, Hytera Mobilfunk GmbH offers support contracts upon request. For information on this topic, please also revert to your local service partner or directly to Hytera Mobilfunk GmbH.

Product training courses assist you in making use of the full scope of features and capabilities of your ACCESSNET-T IP mobile radio system. For information on the training program of Hytera Mobilfunk GmbH, please revert to our responsible service partner, to your local Hytera branch office or directly to Hytera Mobilfunk GmbH.

Support information

Manufacturer:
Hytera Mobilfunk GmbH
Fritz-Hahne-Straße 7
31848 Bad Münder
Germany
Telephone: +49 (0)5042 / 998-0
Fax: +49 (0)5042 / 998-105
E-mail: info@hytera.de
Internet: *www.hytera-mobilfunk.com*

2 Safety regulations

This chapter describes the safety regulations relevant for using the product DIB-R5 outdoor.

2.1 Safety instructions and declaration of conformity

The operation of the product is subject to the statutory provisions of the respective country, in which the product is used. For the operation, the required operating licenses must be requested from the responsible local authorities. Particularly the frequency range used must be reserved for the respective purpose in the country, in which the product is used. The product user is responsible for complying with the statutory provisions and the intended use.

2.1.1 Safety instructions and declaration of conformity for Europe

The product is in conformity with the basic requirements of the applicable European directives. This is confirmed by the marking (CE) of the installed components. The Declarations of Conformity of the installed components may be viewed upon request.

In Germany, the law that governs placing radio devices on the market (Funkanlagengesetz (FuAG)) applies, which implements the European Directive 2014/53/EU (Radio Equipment Directive (RED)). The product complies with the fundamental requirements and the other relevant provisions of this directive.

The product is assigned the equipment class code for radio equipment of class 2 (2.12) and is marked as follows.

Figure 1: Conformity: CE marking

Within the scope of the European Directive 2014/53/EU, the network operator must ensure that the health and safety of the product user and other persons (Article 3 (1)a of 2014/53/EU and 1999/519/EC) are guaranteed. With respect to the exposure of people to electromagnetic fields (110 MHz to 40 GHz), product standard EN 50385 must be applied.

The DIB-R5 is approved in Europe for the frequency ranges listed in the table below.

Table 3: Certified frequency ranges

Model Name	Frequency range (MHz)	Rating (W)
DIB-R5OUTDOOR400	380 to 470	20

Operating authorizations must exist to operate the product in the following member states of the European Union and further states, refer to the table below.

Table 4: States

Member states of the European Union			
BE	BG	CZ	DK
DE	EE	IE	EL
ES	FR	HR	IT
CY	LV	LT	LU
HU	MT	NL	AT
PL	PT	RO	SI
SK	FI	SE	UK
Further states			
CH	IS	LI	NO
TR	---	---	---

- The abbreviations for the member states of the European Union are as follows: Belgium (BE), Bulgaria (BG), Czech Republic (CZ), Denmark (DK), Germany (DE), Estonia (EE), Ireland (IE), Greece (EL), Spain (ES), France (FR), Croatia (HR), Italy (IT), Cyprus (CY), Latvia (LV), Lithuania (LT), Luxembourg (LU), Hungary (HU), Malta (MT), Netherlands (NL), Austria (AT), Poland (PL), Portugal (PT), Romania (RO), Slovenia (SI), Slovakia (SK), Finland (FI), Sweden (SE) and the United Kingdom (UK).
- The abbreviations for the further states are as follows: Switzerland (CH), Iceland (IS), Liechtenstein (LI), Norway (NO) and Turkey (TR).

The use of the respective frequency ranges may vary depending on the country of use. If you have any questions in this regard, please contact Hytera Mobilfunk GmbH.

The general security instructions and accident prevention regulations are described in the "Grundsätze der Prävention" (DGUV-V1) (Principles of Prevention) accident prevention regulations. Publisher of the Accident Prevention Guidelines is the Federation of German Industrial Trade Associations (HVBG), Sankt Augustin. For sources of supply, please revert to the responsible Accident Prevention and Insurance Association office. For work performed on electrical installations, the "Electrical installations and equipment" accident prevention regulation (DGUV-V3) must be heeded.

The product complies with the safety-related requirements of the European Low voltage directive (2014/35/EU, 2006/95/EC) due to application of the standard EN 62368-1. The requirements of this standard must not be violated when using the product.

The network operator is responsible for ensuring that:

- the product is used exclusively within the scope of the intended use,
- work on the electrical installation is performed only by experts that have been trained accordingly,
- special legal requirements that govern the operation of the product are complied with,

- Product modifications or expansions:
  - are performed only after having consulted Hytera Mobilfunk GmbH,
  - are only performed in compliance with the state of the art and scientific knowledge,
  - are performed taking into consideration the applicable national and international provisions,
  - are performed exclusively by trained experts who have been authorized accordingly.
- damage to the product and product defects are immediately remedied by experts that have been trained and authorized accordingly,
- appropriate measures are taken against radio interference,
- any defects in the operation room that come up later on are eliminated immediately,
- for subsequent modifications of the operation room, the requirements described in the present document are always taken into consideration,
- appropriate fire precautions are taken as required (e.g. the use of appropriate fire extinguishers),
- special legal requirements that control the operation and handling of batteries and battery systems, if used, are complied with and that appropriate security devices and measures are provided and taken as required.

Country-specific laws and provisions

All the stipulated laws and provisions of the respective country of use shall always apply. The network operator is responsible for the adherence to these laws and provisions.

2.1.2 Safety instructions and declaration of conformity for North America

The product complies with the requirements of the Federal Communications Commission (FCC).

This device complies with part 15, 22 and 90 of the FCC Rules. Operation is subject to the following two conditions:

- This device may not cause harmful interference, and
- this device must accept any interference received, including interference that may cause undesired operation.

Changes or modifications not expressly approved by the party responsible for compliance could void the user's authority to operate the equipment.

This equipment complies with IC RSS-102 radiation exposure limits set forth for an controlled environment Industry Canada (IC).

Le présent appareil est conforme aux CNR d'Industrie Canada applicables aux appareils radio exempts de licence. L'exploitation est autorisée aux deux conditions suivantes :

- l'appareil ne doit pas produire de brouillage, et
- l'utilisateur de l'appareil doit accepter tout brouillage radioélectrique subi, même si le brouillage est susceptible d'en compromettre le fonctionnement.

This device complies with Industry Canada license-exempt RSS standard(s). Operation is subject to the following two conditions:

- This device may not cause interference, and
- this device must accept any interference, including interference that may cause undesired operation of the device.

Operation of the product in North America

The product is certified for operation on the territory of the United States of America and of Canada by the Federal Communications Commission (FCC) as well as by Industry Canada (IC). It may only be operated in the certified frequency ranges and at the frequencies approved at the sites concerned.

The FCC has approved the DIB-R5 outdoor for the USA for the frequency ranges listed in the table below.

Table 5: Certified frequency ranges (FCC)

Model Name	FCC Identifier/Certification Number	Frequency range (MHz) Europe	Frequency range (MHz) USA
DIB-R5OUTDOOR800	ZW4R5OUTDOOR800	---	■ 806 to 825 ■ 851 to 870

The IC has approved the DIB-R5 outdoor for Canada for the frequency ranges listed in the table below.

Table 6: Certified frequency ranges (IC)

Model Name	IC Identifier/Certification Number	Frequency range (MHz) Europe	Frequency range (MHz) Canada
DIB-R5OUTDOOR400	4431B-OUTDOOR400	380 to 470	■ 406.1 to 430 ■ 450 to 470
DIB-R5OUTDOOR800	4431B-OUTDOOR800	806 to 870	■ 851 to 866 ■ 866 to 869

Further information on the certifications is available on the websites of the FCC and the IC:

- FCC: http://www.fcc.gov/
- IC: http://www.ic.gc.ca/

2.2 Intended use

The product is exclusively designed for being used as a professional TETRA base station. In this application it is used for the wireless communication between subscribers equipped with the corresponding terminals as well as for switching calls and transferring data between subscribers within a TETRA (Terrestrial Trunked Radio) network.

Intended use also includes that:

- the DIB-R5 outdoor is for use indoors and outdoors,
- all the security instructions set forth in the product documents are always heeded,
- all the maintenance tasks described are performed in the interval specified,
- the general, national and in-house safety regulations are heeded.

Any other use is impermissible.

The product is not used as intended, for example, if:

- the requirements described in the product documents haven't been met and instructions are disregarded,
- the product is modified structurally or technically without the approval of Hytera Mobilfunk GmbH,
- replacement parts are used that differ from the components installed by default.

The network operator of the product is responsible for damage to the product or damage caused by the product if the product was used beyond the intended application range and/or was not used as intended.

2.3 RF Radiation Information

This product must be restricted to operations in an Occupational/Controlled RF exposure Environments. Users must be fully aware of the hazards of the exposure and able to exercise control over their RF exposure to qualify for the higher exposure limits.

2.3.1 RF Radiation Profile

Radio Frequency (RF) is a frequency of electromagnetic radiation in the range at which radio signals are transmitted. RF technology is widely used in communication, medicine, food processing and other fields. It may generate radiation during use.

2.3.2 RF Radiation Safety

In order to ensure user health, experts from relevant industries including science, engineering, medicine and health work with international organizations to develop standards for safe exposure to RF radiation.

Used accessories

Use the accessories specified by Hytera only. If not, Hytera shall not be liable for any losses or damages arising out of use of unauthorized accessories.

This equipment complies with FCC radiation exposure limits set forth for an uncontrolled environment. This transmitter must not be co-located or operating in conjunction with any other antenna or transmitter. This equipment should be installed and operated with minimum distance 2.4 m between the radiator and your body.

This equipment complies with IC RSS-102 radiation exposure limits set forth for an controlled environment. This equipment should be installed and operated with minimum distance

- DIB-R5OUTDOOR400 : 1.5m
- DIB-R5OUTDOOR800 : 1.2m

between the radiator and your body.

Cet équipement est conforme aux limites d'exposition aux radiations IC CNR-102 établies pour un environnement contrôlé. Cet équipement doit être installé et utilisé avec une distance minimale de

- DIB-R5OUTDOOR400 : 1.5m
- DIB-R5OUTDOOR800 : 1.2m

entre le radiateur et votre corps.

2.4 Safety measures

All the regulations specified in the following must be adhered to without fail:

- If extension cables or multiple socket outlets are used, make sure that they are inspected for proper condition periodically.
- After any security-related parts have been replaced (e.g. power switch or circuit breakers) a security check must be performed (visual inspection, protective conductor load, leakage resistance, leakage current measurement, function test).
- Observe other task-related security measures and requirements in the standard operating procedures.

Heed the security labeling!

In addition to the safety notices described within the product documentation, all safety labels attached in and on the product must be observed. They point out potential hazardous areas and must neither be removed nor changed.

2.4.1 Authorized personnel

The product may only transported, set up/installed, connected, commissioned, operated and maintained by experts who know and follow the respective valid safety and installation regulations.

The experts must be authorized to perform the required tasks by the person responsible for the security in the enterprise of the network operator. This aspect includes ensuring that access to the site is safeguarded and instruction has been provided on all precautionary measures to be taken.

Experts are persons, who

- are trained and experienced in the corresponding field,
- are familiar with the relevant standards, regulations, provisions and security codes,
- have been instructed in the mode of operation and the operating conditions of the equipment components,
- can identify and avert dangers.

Depending on the tasks to be performed, the following user groups are distinguished:

- Operators: Persons who
  - operate the product,
  - monitor, interrupt, terminate and restore operation of the product.
- Service personnel: Persons who
  - set up the product,
  - prepare and restore the operational state,
  - adjust and/or parameterize the product,
  - monitor, interrupt, terminate and restore operation of the product,
  - maintain, care for, and repair the product.

2.4.2 Electromagnetic compatibility

For function-related reasons, increased electromagnetic radiation may occur with specific products, e.g. RF radio systems. Taking into consideration that unborn life is increasingly worthy of being protected, pregnant women should be protected through appropriate measures. People with personal medical devices such as cardiac pacemakers and hearing aids can also be endangered by electromagnetic radiation. The network operator is obliged to assess workplaces with a considerable risk of exposure to radiation and to avert any hazards.

2.4.2.1 Electromagnetic compatibility for Europe

In proper state and when operated properly, the product complies with all the requirements in respect of interference radiation according to ETSI EN 301 489-5. The connections conducting RF signals must neither be manipulated nor damaged.

When using the product with active typical transmitters, the requirements of EN 50385 in respect of the health and security of a user or any other person in high-frequency fields are met. Compliance with EN 50385 is achieved as of a minimum distance to the observation point of the antenna, refer to the following table. The maximum antenna gain is 7.5 dBi.

Table 7: Minimum distance

Frequency	Minimum distance
300 MHz	4.8 m
400 MHz	4.3 m
800 MHz	3.1 m

2.4.2.2 Electromagnetic compatibility for North America

This equipment has been tested and found to comply with the limits for a Class B digital device, pursuant to Part 15 of the FCC Rules. These limits are designed to provide reasonable protection against harmful interference in a residential installation. This equipment generates, uses and can radiate radio frequency energy and, if not installed and used in accordance with the instructions, may cause harmful interference to radio communications. However, there is no guarantee that interference will not occur in a particular installation.

If this equipment does cause harmful interference to radio or television reception, which can be determined by turning the equipment off and on, the user is encouraged to try to correct the interference by one or more of the following measures:

- Reorient or relocate the receiving antenna.
- Increase the separation between the equipment and receiver.
- Connect the equipment into an outlet on a circuit different from that to which the receiver is connected.
- Consult the dealer or an experienced radio/TV technician for help.

For compliance with the electromagnetic radiation and the limit values with regard to the security of the general population in high-frequency fields, the document "RF Exposure" must always be observed. For the proper operation of the product, the limit values specified in the document "RF Exposure" must always be complied with. For this purpose, site-specific calculations by the network operator may be required.

The document "RF Exposure Info" is available at the following URL as a PDF file: *https://apps.fcc.gov/oetcf/eas/reports/GenericSearch.cfm*.

For this purpose, the first three digits of the FCC Identifier must be entered on the form as "Grantee Code" (ZW4) and the remaining digits as "Product Code", refer to *Table "Certified frequency ranges (FCC)" on page 20*.

2.4.3 Notes on the electrical system

The product may be operated only in the operational states specified by the manufacturer without impairment of the ventilation.

Make sure that all the security measures on the equipment, on the connecting cables and on the load have been taken. Electrical connections may be made/disconnected only when neither voltage nor current is applied to the equipment. Voltage may still be present on the outputs of the equipment after the device has been switched off.

The base station has no integrated disconnect device so it need to be equipped with a disconnect device by installation.

- for PERMANENT CONNECTED EQUIPMENT, a readily accessible disconnect device shall be incorporated external to the equipment, e.g. in the power supply
- for PLUGGABLE EQUIPMENT, the socket-outlet shall be installed near to the equipment and shall be easily accessible, e.g. power supply source plug

The base station is equipped with an internal FUSE (F8002) Rated 125V/5A.

Only perform tasks on the product which are described in the present document or in a document mentioned in *Chapter 1.7 “Further applicable documents” on page 14*.

2.4.4 Hazardous substances

The following chapters contain information on hazardous substances.

2.4.4.1 Hazardous substances in Europe

The product does not contain any substances specified in the Ordinance on Hazardous Substances, published in BGBL.I p. 1782 (Gefahrstoffverordnung [Ordinance on Hazardous Substances], abbr. GefStoffV).

The product is RoHS-compliant (European RoHS Directive 2011/65/EU) and meets all the requirements of the Regulation for the restriction of the use of certain materials in electrical and electronic devices (Electrical and Electronic Devices Material Regulation – ElectroMatR).

2.4.4.2 Hazardous substances outside Europe

All the stipulated laws and provisions of the respective country of use shall always apply. The network operator is responsible for the adherence to these laws and provisions.

2.4.5 Product disposal

The following chapters contain information on product disposal.

2.4.5.1 Product disposal in Europe

The equipment rack as well as all components therein installed and, if applicable, marked with the symbol (refer to Figure 2) fall within the scope in Germany of the Electrical and Electronic Device Act (ElektroG). In Europe, the European directive 2012/19/EU (WEEE) applies for electrical and electronic equipment.

The respective products are marked with the attached symbol according to EN 50419, refer to the following figure:

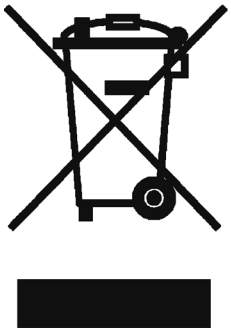

Figure 2: Marking the components according to EN 50419

Once the service life of a product has ended, the product must not be disposed of in the standard domestic refuse. Even disposal via the municipal collection points for electric and electronic wastes is not permitted.

For an environment-friendly disposal or return to the material cycle, Hytera Mobilfunk GmbH developed a disposal concept and assumes the complete obligation for the return and disposal with respect to the Electrical and Electronic Device Act (ElektroG).

Please revert to your local service representative or directly to Hytera Mobilfunk GmbH to dispose of the product.

2.4.5.2 Product disposal outside Europe

All the stipulated laws and provisions of the respective country of use shall always apply. The operator is responsible for compliance with these.

2.5 Safety and responsibility

The following chapter lists all relevant security notices for the safe handling of the product. The listed security notices must be followed for all operations on the product.

Observing the product documentation

The product documentation is part of the product and an important component in the security concept. Its non-observance can result in serious injuries or even death.

➔ Read the product documentation and always follow all described procedures and warning notices.

➔ Always keep the product documentation next to the product.

➔ Pass on the product documentation to all subsequent users.

Use suitable means of lifting and/or transportation

The product is very heavy. As a result, a risk of injury exists when lifting the product. In addition, the product may fall and be damaged when lifting.

➔ Use suitable means of lifting and/or transportation.

➔ Wear safety gloves.

➔ Lift the product only for a short period of time.

➔ Lift the product evenly.

➔ If necessary, ask an additional person to assist during lifting.

Danger from falling loads

If an unpacked product resting on a pallet is being lifted, e.g. with a fork lift, it could fall down. Persons located in the lifting area of the fork lift can receive life-threatening injuries.

➔ Transport the product exclusively while it is standing on a pallet in its packaging to prevent it from tipping over.

➔ Before any loading activity, check the load capacity of the fork lift.

➔ The fork length of the fork lift must be longer than the pallet. A fork length that is too short causes damages to the floor panels of the pallet or the product.

Risk of injury from scattered material

During setup and commissioning of the product, connecting cables and lines are connected and, if necessary, routed. This may lead to tripping sources for third parties and represent a significant risk of injury.

➔ Avoid tripping sources for third parties from scattered connecting cables and lines.

Wear safety gloves

The product features sharp edges on the inside. Risk of injury if you do not wear safety gloves.

➔ Always wear safety gloves when working on the product.

Risk of electric shock from energized components

The hardware components in the equipment or compact rack are energized. Touching energized parts can cause an electric shock.

➔ When working in and on the equipment or compact rack, ensure that the power source at the site is switched off. This must have been checked with a voltmeter.

➔ Deploy a switch interlock to ensure that a deactivated power source cannot be activated thoughtlessly by a third person.

Risk of electric shock from missing protective conductor

The risk of an electric shock and damage to the product exists if the live cores of the power supply cable are connected without grounding.

➔ First, connect the green-yellow protective conductor.

Risk of hot surface

The risk of a temperature over +35 °C on the surface of the product exists if the enviroment temperature is +60 °C.

➔ Do not touch the surface of the product.

➔ Always wear safety gloves when working on the product.

➔ Wait one-half hour after switching off the product before handling parts.

2.6 Safety markings

The following chapters describe security markings on the product and its packaging.

2.6.1 Safety markings on the product

The product is equipped with security markings. They serve as an indication to possible hazards and may not be deleted or modified (if necessary, marking in accordance with DIN 4844 BGV A8 [VBG 125]).

2.6.2 Safety markings on transport boxes

To protect against improper handling of the product during a transport, the transport boxes and the product itself are fitted with corresponding security markings to call attention to proper handling.

Transport inspection using impact indicators

To check whether a product was properly transported, the transport boxes are fitted with impact indicators. The impact indicator shows heavy impacts or vibrations that were caused by an improper transport.

The following chapters describe the used security markings and indicate that the corresponding instructions must be followed.

2.6.2.1 Safety marking "Fragile"

The security marking "Fragile" points to the necessary protection of the product against shock. Transport boxes with this marking must absolutely be protected against shock.

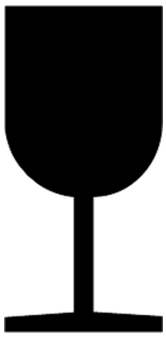

Figure 3: Safety marking "Fragile"

2.6.2.2 Safety marking "Transport Upright"

The security marking "Transport Upright" points to the cover of the transport box. Transport boxes with this marking must always be transported with the cover at the top.

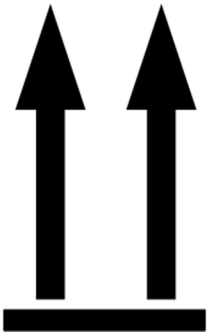

Figure 4: Safety marking "Transport Upright"

2.6.2.3 Safety marking "Keep dry"

The security marking "Keep dry" points to the necessary protection of the product against wetness (e.g. rain, high humidity during the transport in closed vehicles/containers and/or formation of condensate when covered with a tarpaulin). Transport boxes with this marking must absolutely be protected against any wet influences.

Figure 5: Safety marking "Keep dry"

3 Product description

The DIB-R5 outdoor is a base station suitable for outdoor and indoor operation. The DIB-R5 outdoor has been developed for outdoor operation under harsh conditions and can be flexibly mounted providing radio coverage exactly where it is needed. Thanks to the robust and compact housing the DIB-R5 outdoor can be easily mounted on walls, on top of antenna masts, in small niches or in tunnels.

One DIB-R5 outdoor unit offers one transceiver which provides one TETRA carrier. To handle a higher voice or data load, multiple DIB-R5 outdoor units can be combined to one high-capacity TETRA radio cell to provide the necessary radio channels. In this case each unit requires only one antenna.

The DIB-R5 outdoor supports dual diversity for optimal reception with highest sensitivity. This optimizes the radio characteristic of the base stations and reduces the number of base stations that are required for the coverage of a certain area. The DIB-R5 outdoor can be integrated in ACCESSNET-T IP seamlessly, be combined with DIB-R5 indoor base stations or used as a coverage extension for existing TETRA systems.

The integration in existing systems is independent from the existing system design, as the DIB-R5 outdoor supports distributed and centralized switching architectures. Furthermore, the DIB-R5 outdoor is prepared for local gateways e.g. to an external telephony system, API-connected applications as well as IP data systems.

The DIB-R5 outdoor is designed to operate in environments where power supply capacity is limited and passive cooling is a must. Lowest power consumption qualifies the DIB-R5 outdoor for battery-based transportable solutions (e.g. as "rapid deployment" base station), or power supply using solar panels.

For external synchronization, the DIB-R5 outdoor supports satellite-based synchronization, e.g. GPS (in general Global Navigation Satellite System, GNSS). Even without permanent GNSS reception the proper operation of the DIB-R5 outdoor is ensured for one year (depending on the environmental conditions). A GNSS signal had to be received before at least once.

DIB-R5 outdoor

Figure 6: DIB-R5 outdoor

3.1 DIB-R5 outdoor

The following figure shows the bottom view of the DIB-R5 outdoor. The table below describes the components in greater detail.

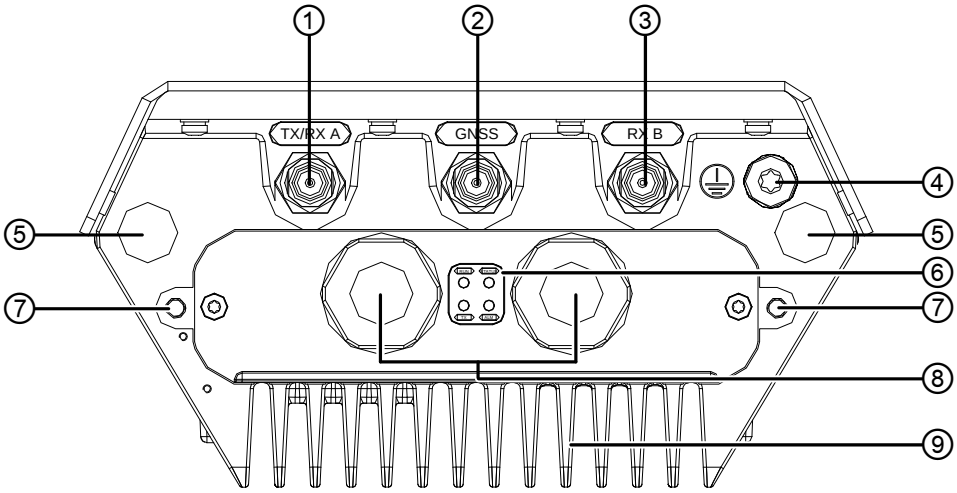

Figure 7: DIB-R5 outdoor (bottom view)

Table 8: Legend: DIB-R5 outdoor (bottom view)

No.	Component	Number	Description
1	TX/RX A	1	Antenna connector for a common receiving/transmitting antenna (Rx/Tx antenna).
2	GNSS	1	Antenna connector for a GNSS antenna (GPS or Glonass).
3	RX B	1	Antenna connector for an additional receiving antenna (Rx antenna) to use antenna diversity.
4	Screw socket	1	Screw socket for the grounding screw of the grounding cable. The grounding cable is connected to the grounding system at the site.
5	Fastening eye for transportation or lifting	2	Fastening eye for transportation/lifting materials, e.g. lifting straps.
6	Indicators (LEDs)	4	Status display, refer to *Table "Legend: Indicators (LEDs) of the connection board" on page 41* Only with connection board IFB9 or later.
7	Screw sockets	2	Screw sockets for fastening the housing to the mounting bracket.
8	Grommets	2	Grommets for all connections except antennas.
9	Heat sink	1	Heat sink for optimal heat dissipation.

DIB-R5 outdoor

The following figure shows the perspective view of the DIB-R5 outdoor. The table below describes the components in greater detail.

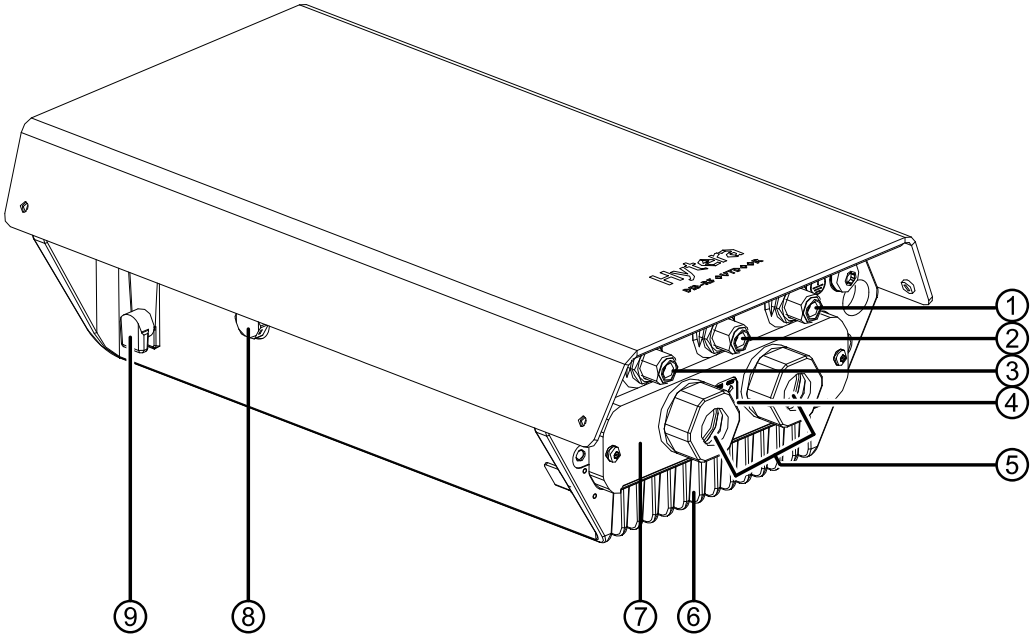

Figure 8: DIB-R5 outdoor (perspective view)

Table 9: Legend: DIB-R5 outdoor (perspective view)

No.	Component	Number	Description
1	RX B	1	Antenna connector for an additional receiving antenna (Rx antenna) to use antenna diversity.
2	GNSS	1	Antenna connector for a GNSS antenna (GPS or Glonass).
3	TX/RX A	1	Antenna connector for a common receiving/transmitting antenna (Rx/Tx antenna).
4	Indicators (LEDs)	4	Status display, only with connection board IFB9 or later.
5	Grommets	2	Grommets for all connections except antennas.
6	Heat sink	1	Heat sink for optimal heat dissipation.
7	Connection board (slider unit)	1	The external connections are described in *Table “Legend: Connection board (slider unit) (top view)” on page 37*.
8	Vent	1	Vent for pressure and humidity equalization.
9	Mounting hook	2	Mounting hook for fastening the housing to the mounting bracket.

The following figure shows the left side view of the DIB-R5 outdoor. The table below describes the components in greater detail.

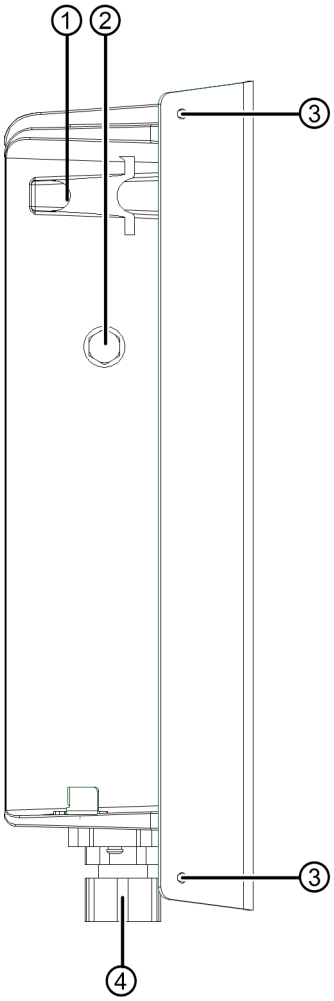

Figure 9: DIB-R5 outdoor (side view)

Table 10: Legend: DIB-R5 outdoor (side view)

No.	Component	Number	Description
1	Mounting hook	2	Mounting hook for fastening the housing to the mounting bracket.
2	Vent	1	Vent for pressure and humidity equalization.
3	Screw sockets	4	Screw sockets for fastening the sun protection (optional accessory).
4	Grommets	2	Grommets for all connections except antennas.

3.2 Connection board (slider unit)

The DIB-R5 outdoor features a detachable connection board (slider unit) for all connections except antennas and grounding. The connection board can be prepared with all cables and installed into the DIB-R5 outdoor in one step.

The connection board is located at the bottom of the DIB-R5 outdoor, refer to Figure 7. The slider unit is fastened with captive mounting screws. To prevent the connection board from falling down, the slider unit is secured by a spring mechanism. It also can be detached completely.

3.2.1 Connection board IFB6

This chapter describes the connection board IFB6 in detail.

The following figure shows the top view of the connection board (slider unit). The following table describes the components in greater detail.

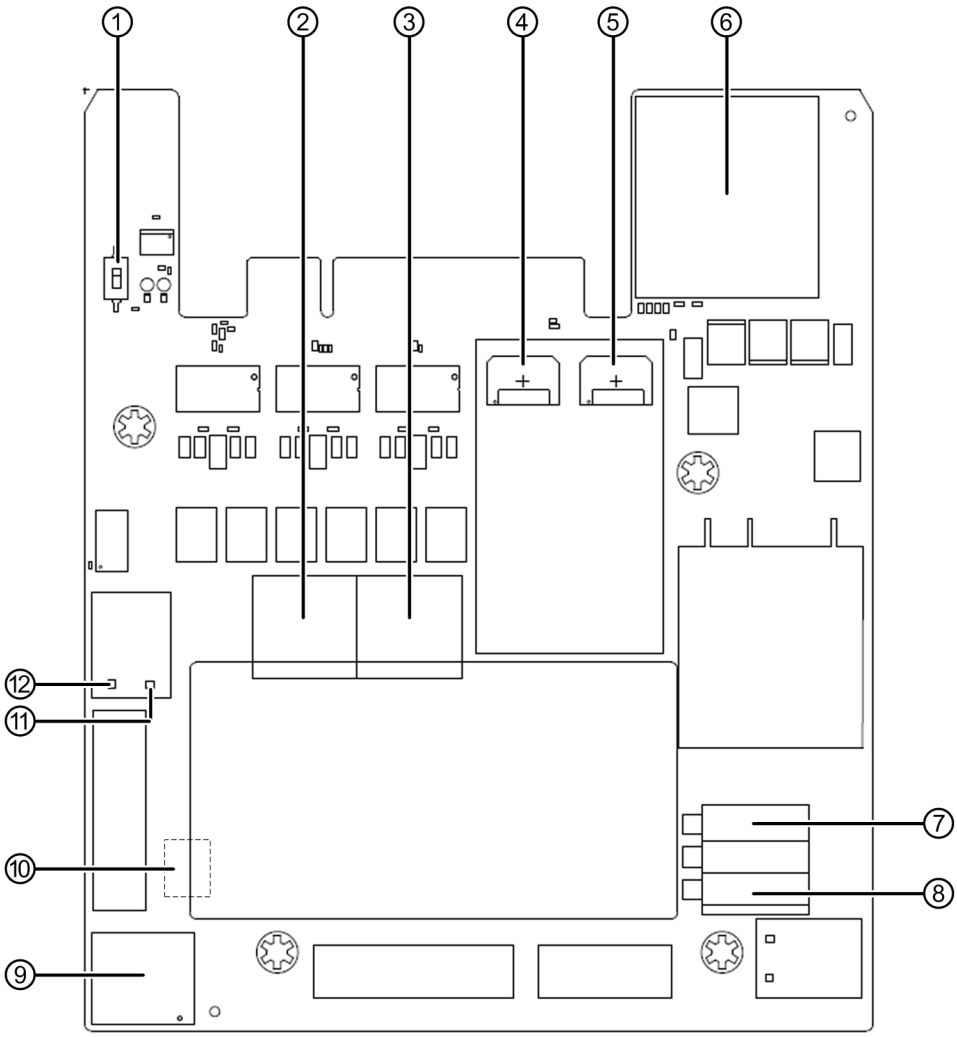

Figure 10: Connection board (slider unit) (top view)

Table 11: Legend: Connection board (slider unit) (top view)

No.	Component	Number	Description
1	DIP switch	1	Switch for setting the operation mode of an unit – only for base station configurations with multiple units. Switch positions: ■ Master (default) ■ Slave
2	ACN0	1	Ethernet connection for connecting the unit to the transport network.

No.	Component	Number	Description
3	INT0	1	■ Ethernet connection for interconnecting multiple units and connecting the service computer directly. ■ Interface for Digital Diversity (DDV)
4	SFP1	1	Optical connection for connecting the unit to the transport network.
5	SFP2	1	Optical connection for interconnecting multiple units.
6	SD card	1	Slot for the SD card.
7	+48 V	1	Connection for the positive voltage line (input voltage).
8	-48 V	1	Connection for the negative voltage line (input voltage).
9	Dongle	1	USB port (USB A) for the software license dongle.
10	Service	1	USB port (Micro-USB) – bottom side, for manufacturing purposes only.
11	E2	1	Input connector for wiring a potential-free switch.
12	E1	1	

3.2.2 Connection board IFB9

This chapter describes the connection board IFB9 in detail.

The following figure shows the top view of the connection board (slider unit). The following table describes the components in greater detail.

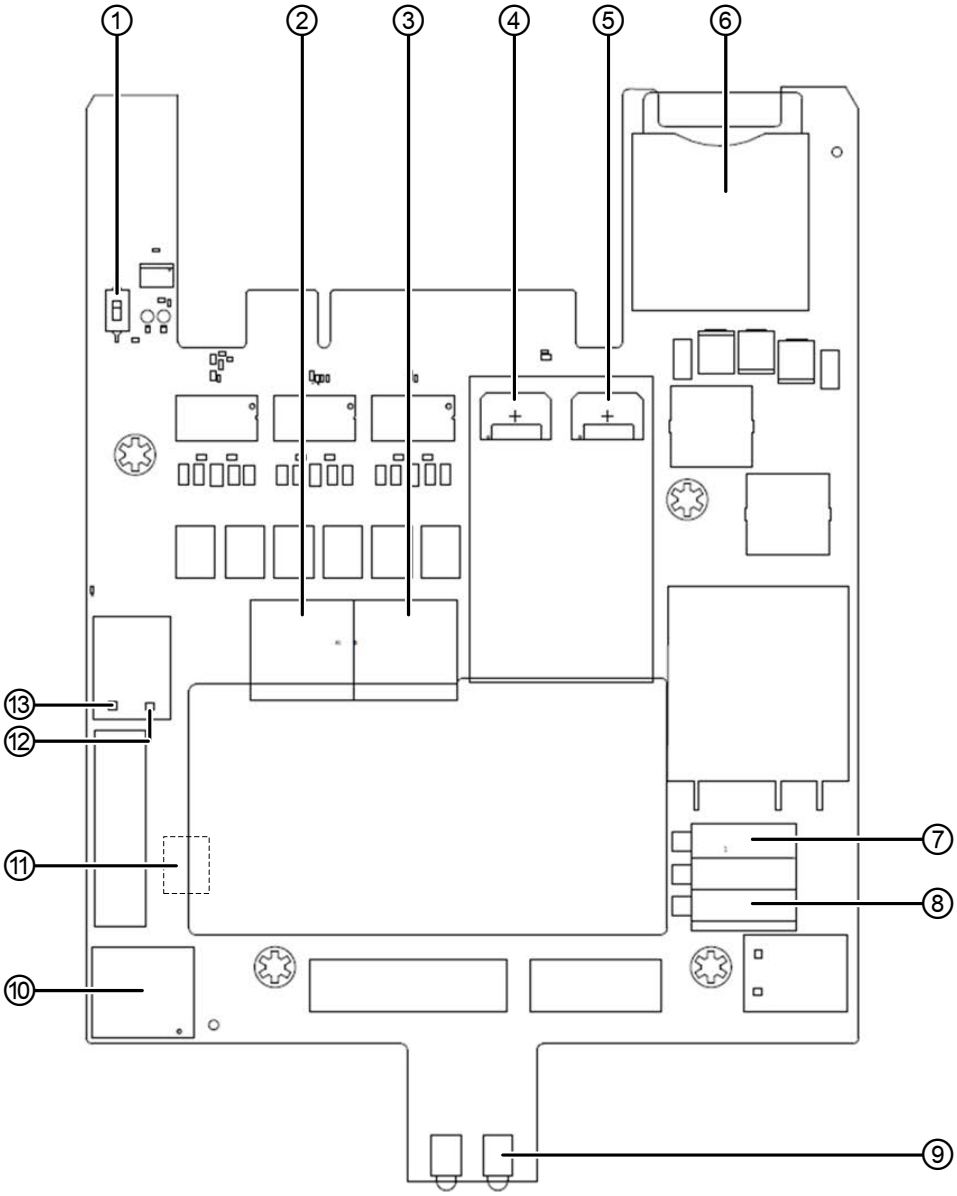

Figure 11: Connection board IFB9 (slider unit) (top view)

Table 12: Legend: Connection board IFB9 (slider unit) (top view)

No.	Component	Number	Description
1	DIP switch	1	Switch for setting the operation mode of an unit – only for base station configurations with multiple units. Switch positions: ■ Master (default) ■ Slave
2	ACN0	1	Ethernet connection for connecting the unit to the transport network.
3	INT0	1	■ Ethernet connection for interconnecting multiple units and connecting the service computer directly. ■ Interface for Digital Diversity (DDV)
4	SFP1	1	Optical connection for connecting the unit to the transport network.
5	SFP2	1	Optical connection for interconnecting multiple units.
6	SD card	1	Slot for the SD card.
7	+48 V	1	Connection for the positive voltage line (input voltage).
8	-48 V	1	Connection for the negative voltage line (input voltage).
9	Indicators (LEDs)	4	Status display, refer to *Table "Legend: Indicators (LEDs) of the connection board" on page 41*
10	Dongle	1	USB port (USB A) for the software license dongle.
11	Service	1	USB port (Micro-USB) – bottom side, for manufacturing purposes only.
12	E2	1	Input connector for wiring a potential-free switch.
13	E1	1	

The following figure shows the indicators (LEDs) of the connection board. The following table describes it in detail.

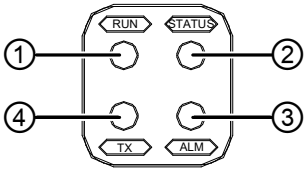

Figure 12: Indicators (LEDs) of the connection board

Table 13: Legend: Indicators (LEDs) of the connection board

No.	LED	Color	Description – Master	Description – Slave
1	RUN	green	Lights if the connection board is in operation	
		blue	Lights if the voltage is applied during boot process	
2	STATUS	green	■ Lights if master is synchronized ■ Off during boot process	Off
		blue	■ Master is not synchronized ■ Off during boot process	
		yellow	Off	Normal operation
		purple	Off	Lights during fallback operation without master
3	ALM	red	Lights in case of a failure	
4	TX	green	Lights if Tx is on	

3.3 Mounting bracket

The DIB-R5 outdoor can be mounted on different locations. For this purpose the mounting bracket is used, which is suitable for e.g.:

- mast-mounted installations
- wall-mounted installation

The mounting bracket features a fastening mechanism to easily attach the DIB-R5 outdoor unit. Once the mounting bracket is attached, the DIB-R5 outdoor unit is fixed securely. Additionally the DIB-R5 outdoor can be theft-protected by means of the built-in lock.

The following figure shows the front view of the mounting bracket. The table below describes the components in greater detail.

Mounting bracket

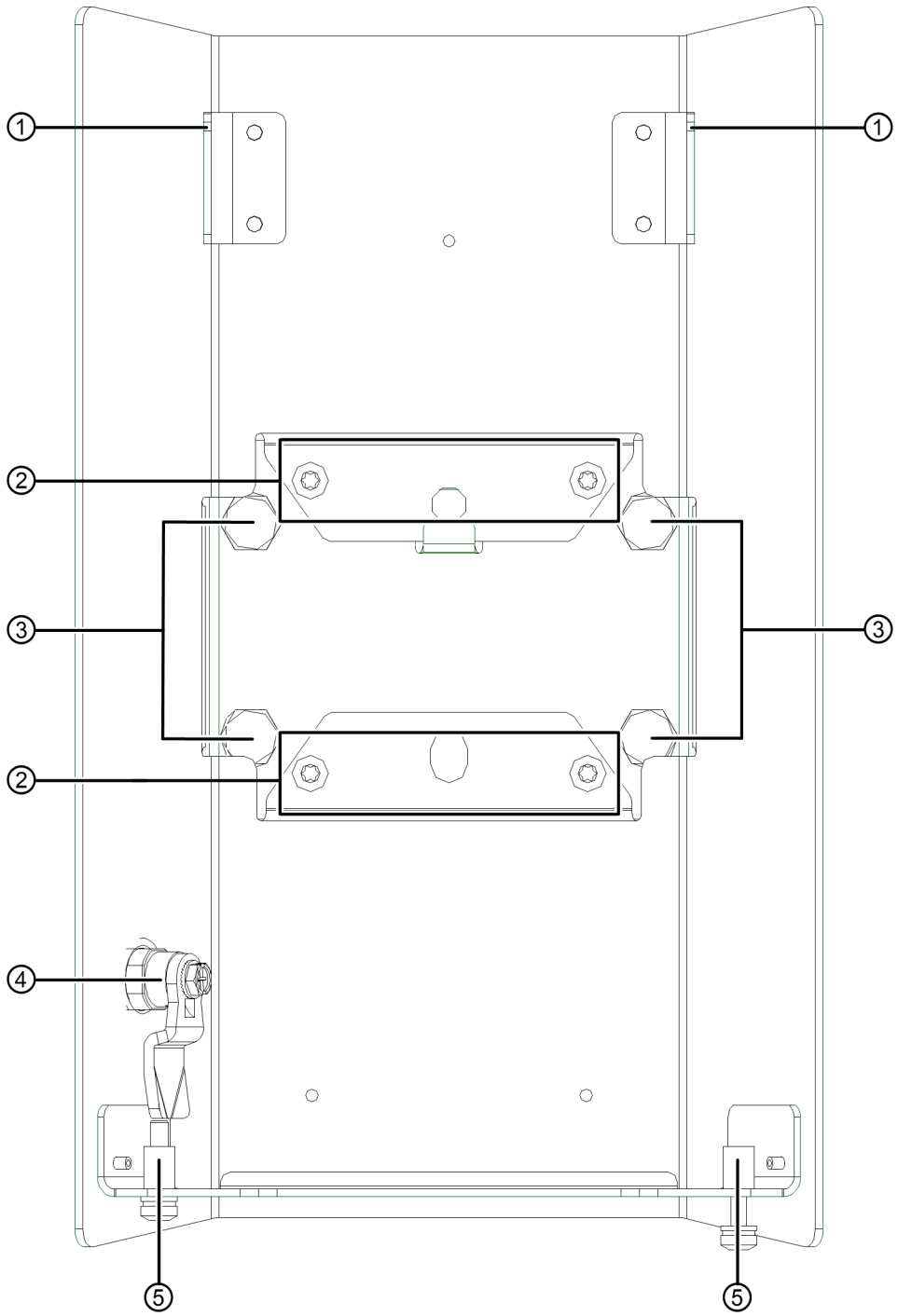

Figure 13: Mounting bracket (front view)

Table 14: Legend: Mounting bracket (front view)

No.	Component	Number	Description
1	Hook	2	Hook for hanging the unit into the mounting bracket.
2	Drillings	6	Drillings for ■ mounting the bracket to the mast bracket, ■ wall mounting.
3	Screws	4	Screws of the mast bracket.
4	Lock	1	Built-in lock for theft protection.
5	Captive screws	2	Captive screws for fastening the unit to the mounting bracket.

3.4 Interfaces

The following table provides an overview of the interfaces of DIB-R5 outdoor. The use of the interfaces is described in the corresponding chapters about the components of DIB-R5 outdoor.

Table 15: General interfaces (per unit)

RF interfaces	Number	■ Rx/Tx: 1 ■ Rx: 1
	Connection	N socket
GNSS antenna connection	Number	1
	Specification	50 Ω antenna input with 5 V_{DC} output for active antenna
	Connection	N socket
Ethernet ports	Number	2
	Specification	Ethernet, 10/100BaseT
	Connection	RJ45
Optical connection (alternative to Ethernet)	Structure	Fiber
	Number	2
	Connection	SFP socket (Small Form-factor Pluggable, SFP)
Power supply connector	Structure	Terminal
	Number	1
	Connection	Plug for cable cross sections (wire or stranded wire) from 0.2 to 1.5 mm^2 (24 to 16 AWG)

Input connector	Structure	Terminal, connected to optocoupler
	State (configurable)	■ "active-open" ■ "active-close"
	Number	1
	Connection	Plug for cable cross sections (wire or stranded wire) from 0.2 to 1.5 mm^2 (24 to 16 AWG)

3.5 Wiring

The following figure shows the wiring of a DIB-R5 outdoor consisting of one unit.

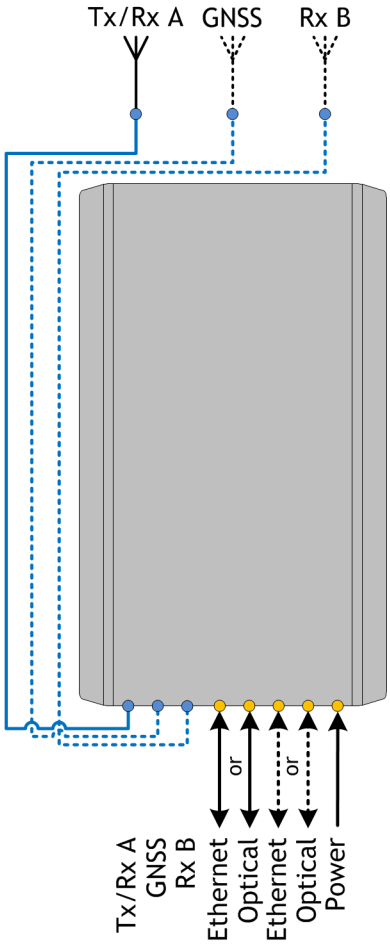

Figure 14: Wiring (one unit)

The following figure shows the wiring of a DIB-R5 outdoor consisting of two units.

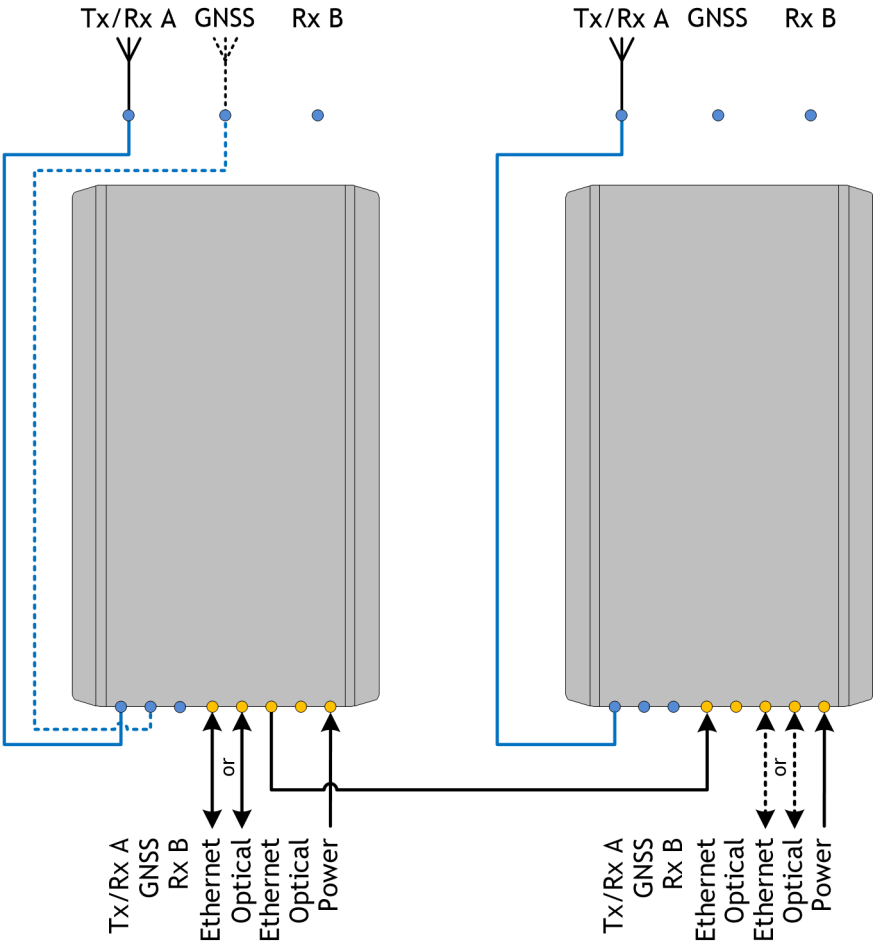

Figure 15: Wiring (two units)

The RF antenna of each unit is used mutually as diversity antenna for the other unit.

3.6 Overview of function blocks

In ACCESSNET-T IP, the available services and features are provided via so-called function blocks. The DIB-R5 outdoor can provide the following function blocks depending on the respective network configuration:

- *Base Station Function (BSF)*
- *Switching Controller Function (SCF)*
- *TETRA Vocoder Function (TVF)*
- *Application Gateway (AGW)*
- *Packet Data Gateway (PGW)*
- *Telephony Gateway (TGW)*

3.6.1 Base Station Function (BSF)

The Base Station Function (BSF) is a function block of the ACCESSNET-T IP and provides the air interface in compliance with the TETRA standard (Terrestrial Trunked Radio, TETRA).

The air interface facilitates the communication (voice and data) between terminals such as handheld radios, data radios (Remote Terminal Unit, RTU) and radio dispatcher workstations. The radio channels for this purpose are generated via transceivers of the base stations that are available in various frequency ranges. The Traffic and Packet Data channels are dynamically occupied. Signaling and short messages (SDS) are transmitted via statically configured control channels (MCCH and, if necessary, SCCH).

3.6.2 Switching Controller Function (SCF)

The Switching Controller Function (SCF) is a centralized function block of the ACCESSNET-T IP and ensures the IP-based routing functions between the network constituents of an ACCESSNET-T IP and the gateways (telephone network, application and packet data).

The SCF can be used flexibly on different network elements/platforms and combined with other function blocks.

3.6.3 TETRA Vocoder Function (TVF)

The TETRA Vocoder Function (TVF) serves as a converter (encoder/decoder) for voice streams between the TETRA system and an external system such as a telephone network. With the aid of the TVF, the voice between the TETRA format used (ACELP, Algebraic Code Excited Linear Prediction) and the G.711-format (A-law or µ-law) used in telephone networks is recoded. The TVF is required for the function block Telephone Gateway (TGW). The TVF is also required for the Application Gateway (AGW) function blocks if the voice connection of the application is to be implemented via G.711 instead of via the TETRA codecs.

3.6.4 Application Gateway (AGW)

The Application Gateway (AGW) facilitates the communication between the ACCESSNET-T IP and applications that use the services of the TETRA system such as dispatchers, positioning systems (AVL, GIS), voice and data recording as well as SCADA or SMART metering applications.

3.6.5 Packet Data Gateway (PGW)

The packet data service facilitates the efficient transmission of packet data between terminals within ACCESSNET-T IP and to connected IP networks. Possible application scenarios are e.g. database queries or the transmission of data to control systems (SCADA, Supervisory Control and Data Acquisition).

The Packet Data Gateway (PGW) provides the packet data service for terminals. This Packet Data Gateway provides access points for accessing connected IP networks of various user organizations.

3.6.6 Telephony Gateway (TGW)

The Telephony Gateway (TGW) provides an IP-based telephone gateway between the ACCESSNET-T IP and an appropriate VoIP private automatic branch exchange.

Within the ACCESSNET-T IP, the TGW is logically connected to the Switching Controller Function (SCF). The signaling of the TGW for the registration and call control with the telephone system is performed according to the SIP standard (Session Initiation Protocol). The Real-Time Transport Protocol (RTP) is used as transmission protocol for voice. The voice itself is encoded in the G.711 format (A-law or µ-law).

3.7 Redundancy options

The ACCESSNET-T IP provides numerous redundancy concepts to ensure the availability of services and features reliably even in exceptional situations. The concept of designing system functions, function blocks, network elements and connection routes redundantly, may be required to ensure site reliability and system reliability. Site and system reliability refers to the capability of the network to perpetuate the operation of the overall system, even if one site or route drops out completely or partially (due to technical failure, natural phenomena, acts of terrorism etc.).

The system technology allows flexible network structures and scalable redundancy solutions that account for the different requirements for availability and capacity within an complete network.

If the base station should be isolated from the rest of the network, it still provides most of its functions in isolated operation. Especially security-related features like authentication and air interface encryption are supported. Hence, the base station enables a fully functional fallback operation and full redundancy of the transceiver (carrier).

The following chapters describe the available redundancy options in conjunction with DIB-R5 outdoor:

- *Redundant main control channel (MCCH)*
- *Carrier redundancy*
- *Controller redundancy*
- *Fallback operation*

The redundancy options can be combined with each other.

3.7.1 Redundant main control channel (MCCH)

By redundant main control channels (MCCH) the operation of a base station is guaranteed even if the carrier with the MCCH drops out or should be disturbed.

If the carrier that provided the main control channel last drops out, an alternative carrier will take on this task. Hence, the MCCH is shifted, the same applies to all configured SCCHs (Secondary Control Channel). If also this carrier drops out and the base station is equipped with more than two carriers, the control channels are shifted to the next carrier available. In this case, the replacement carriers for the MCCH keep on sending on their original frequency, not on the frequency of the failed carrier. This frequency change is useful especially when interfering carriers affect the MCCH frequency that was being used up to that point such that the MCCH does not suffer further interference after the frequency change.

For redundant main control channel at least two DIB-R5 outdoor units are required.

3.7.2 Carrier redundancy

To increase the reliability of carriers or to ensure the radio coverage, redundant carriers can be used within a base station. These spare carrier ensure the radio coverage on the frequency of the failed carrier if a carrier drops out. Carrier redundancy is mostly used in cases, in which only a few frequencies are available.

For carrier redundancy at least two DIB-R5 outdoor units are required.

3.7.3 Controller redundancy

The controller required for operating a base station can be of redundant design. For this purpose two DIB-R5 outdoor units are used, where the controller software of one unit is in operation and the other is on standby. In the case of a failure of the active unit, the standby unit is automatically activated and takes on its function. In this way, the operation of the base station is always ensured.

For controller redundancy two DIB-R5 outdoor units are required.

3.7.4 Fallback operation

The connection to other network constituents is not possible in fallback operation, the following services and features, however, are available locally:

- Group calls
- Individual calls (semi-duplex and duplex calls)
- Transmission of SDS and status messages
- Class 2 and class 3 air interface encryption (encrypted voice and data communication)
- Authentication (with respect to the base station)
- Priority calls, emergency calls, pre-emptive priority calls
- Queue, depending on the priority level of the call

- Rejection of a call from/to an unknown subscriber
- Rejection with the reason "busy" if the subscriber is already making a call or the priority of the incoming call is minor
- Configurable call time limit
- Inactivity timer (ending semi-duplex calls after the configured inactivity time has expired)

3.8 Order information

For ordering a DIB-R5 outdoor the following should be considered:

- The DIB-R5 outdoor can be ordered for several frequency ranges.
  The frequency range is defined by the last two digits of the part number listed in the following table.
- For multiple-carrier configurations the required amount of DIB-R5 outdoor units has to be ordered.
  Ethernet or optical cables meeting the cable specifications can be used for interconnection.

Table 16: Order information

Designation	Part number
DIB-R5 outdoor including per unit: ■ **Connection board IFB6** 2 split cable glands for the grommets Connection thread: M25 ■ **Connection board IFB9** 2 cable glands for the grommets Connection thread: M25 ■ 1 standard sealing insert for power supply cable – Holes: 1 – Cable diameter: 9 to 11 mm ■ 1 standard sealing insert for ethernet cable(s) – Holes: 2 – Cable diameter: 6 mm If multiple units are ordered, an ethernet cable for interconnection is included (project-specific).	5550.0050.xx
Optional accessories	
Mounting bracket (mast mounting)	5550.1615.00
GPS or Glonass antenna	on request
xx is dependent on the frequency range.	

Order information

4 Transport and storage

This chapter describes the transport and storage of the product DIB-R5 outdoor as well as the security measures to be followed and prerequisites for the corresponding activities.

4.1 Safety measures and prerequisites

The following security measures and prerequisites must be followed for all activities described in this chapter:

- Devices are sold in the region of the Eurasian Economic Commission Customs Union [EECCU] in original packaging and in compliance with the national laws of the countries of the customs union.
- The safety regulations must be considered at all times, refer to *Chapter 2 “Safety regulations” on page 17*.
- Observe all other activity-based security measures and prerequisites in the activity descriptions in this chapter.
- The transport and storage of the product must always be performed in accordance with the safety regulations and temperature ranges, refer to *Table “Environmental conditions” on page 55*.
- The required tools, aids and materials must be available.

4.2 Tools, Aids and Materials

The following table provides an overview of the tools, aids and materials required for the work steps in this chapter.

Table 17: Overview of tools, aids and materials (transport and storage)

Tools, aids	Materials
At least one person, in case of uneven transport paths two persons	---

4.3 Transporting the product

This chapter describes the transport of the product for all transports to and from the operation room/site.

4.3.1 Transporting the DIB-R5 outdoor

The DIB-R5 outdoor must be transported in its original weather-resistant packaging, for example.

4.3.2 Carrying the DIB-R5 outdoor

The DIB-R5 outdoor can be carried with or without a mounting bracket.

⚠ CAUTION

Risk of injuries and damages due to heavy weight

The DIB-R5 outdoor weighs up to 10 kg. It could fall down while carrying it and injure persons or damage other components.

➔ Ensure that the DIB-R5 outdoor does not fall down while carrying it.

➔ Perform all procedures described below exclusively together to ensure that the precautions are taken.

➔ Select the transport route so that it does not pass through terrain that is difficult to cover.

4.4 Storage

The product must be stored in closed rooms that are dry and weatherproof. In addition, this room must meet the required environmental conditions, refer to *Table “Environmental conditions” on page 55*.

NOTICE

Storage of DIB-R5 outdoor

The DIB-R5 outdoor cannot be stored outside (e.g. mounted to a mast) without all cables including cable glands connected.

➔ Store the DIB-R5 outdoor only outside if all cables including the correct cable glands are connected.

5 Site requirements for the DIB-R5 outdoor

The present chapter describes the requirements that must always be ensured for the intended use and proper operation of the product.

Requirements may depend on the expansion stage

The requirements on the site may depend on the respective expansion stage of the product and can vary depending on the number of installed units. For this reason, the respective expansion stage must be known.

5.1 Mounting requirements

The DIB-R5 outdoor offers different mounting options:

- Mast
- Wall

The following requirements must be met:

- Free space around the DIB-R5 outdoor
  - Top: 1 m (39,4 in) for free airflow.
  - Bottom: Enough space for the required bending radius of the respective cables and free convection.
    Access to the connection board (slider unit) must always be granted for service and maintenance tasks.
  - Left and right: Recommended 100 mm (3,94 in).
  - Front: Enough space for mounting and installation including personnel and tools.
  - The DIB-R5 outdoor must be positioned upright to allow free airflow through the heat sink.

  The ventilation of the DIB-R5 outdoor uses the stack-effect. Therefore the airflow through the heat sink must not be blocked under any circumstances.
- The mast diameter for the DIB-R5 outdoor mounting bracket (mast mounting) should be 42 to 115 mm.
- The mast diameter for the GNSS antenna holding bracket (Part-No. 5500.8672.00) should be 25 to 55 mm.
- Wall and mast mounting
  - The wall or mast must be strong enough to carry the DIB-R5 outdoor, refer to *Table “Dimensions and weights of the product (per unit)” on page 54*.

- Outdoor mounting
  - The wall/mast must be strong enough to resist the wind load.
  - The installation site must be protected against extreme solar radiation by a sun protection (available optional accessory). In this case additional free space is required.
- Mounting of multiple units
  - Due to free airflow and cabling the units should be mounted besides each other.
  - The distance between the units must be considered for interconnection.

Table 18: Dimensions and weights of the product (per unit)

Width	250 mm (9.84 in)
Height	426 mm (16.77 in)
Depth	■ 167 mm (6.57 in) including mast mounting bracket ■ 135 mm (5.31 in) including wall mounting bracket
Weight	■ 400 MHz: 9.1 kg (20.06 lbs) ■ 800 MHz: 8.3 kg (18.3 lbs)

5.2 General requirements

The following requirements must be met for being able to operate the product as intended:

- It must be possible to lock the installation sites to protect the system technology against damage that could result in the open access to dangerous voltages.
  - Access is only allowed for SERVICE ENGINEERS and USERS who have been informed about the reasons for the restriction of the access to the site and about all precautionary measures to be taken, and
  - Access is to be secured using TOOLS, or using lock and key, or by other means and is monitored by the person responsible for the site
- There must be unhindered access to installation sites for the related personnel.
- Installation sites must be suitable for the professional installation of any required supply lines.

Scope of the site requirements

When the installation site is modified, the DIB-R5 outdoor site must still meet the site requirements.

5.3 Environment

This chapter describes the requirements for the environmental conditions of the site/operation room that must always be ensured for operating the product as intended.

The following table provides an overview of the environmental conditions that must ensured. The following chapters describe the environmental conditions in detail.

Solar radiation

Depending on the installation site the solar radiation must be considered.

If required, the installation site must be protected against direct sunlight by a sun protection (available optional accessory).

Table 19: Environmental conditions

Operation	Temperature range	-30 °C to +60 °C (-22 °F to +140 °F) Conditions for operation in temperature range -40 °C to +60 °C (-40 °F to +140 °F) available on request
	Relative humidity	5 % to 95 % (non-condensing)
	Degree of protection	IP65
	Altitude for operation (max. altitude of site)	max. 4700 m (15419 ft) From a height of 3000 m the temperature range or transmitting power are limited.
Transport	Temperature range	-40 °C to +85 °C (-40 °F to +185 °F)
	Conditions in compliance with	ETSI EN 300 019-1-2 class 2.2
Storage	Temperature range	-40 °C to +85 °C (-40 °F to +185 °F)
	Conditions in compliance with	ETSI EN 300 019-1-1 class 1.2

5.3.1 Contamination

The DIB-R5 outdoor is intended for outdoor usage. The housing with the connection board and antenna connectors are water- and dustproof with installed cable glands. Dust or water in the environment have no direct influence to the operation of the product.

The heat sink of the product has to be kept clean and free of any objects interfering with free airflow for cooling. This includes e.g. bird's nests or droppings.

5.4 Antennas

The following chapters describe the antenna-related requirements:

- *Preparation of the antenna system*
- *Requirements of the GNSS antenna (recommended)*

NOTICE

Surge arresters required

To protect the DIB-R5 outdoor against overvoltages, appropriate surge arresters must be used. The surge arresters must be mounted between antenna socket and antenna cable.

5.4.1 Preparation of the antenna system

The selection of the antenna system results from the network requirements.

Recommendations for reception

Corresponding to the requirements at the respective site, Hytera Mobilfunk GmbH recommends the use of diversity reception for optimum reception properties.

For this purpose, the antenna system can be expanded to dual diversity.

Depending on the number of units installed the required amount of antennas differs:

- 1 unit: 1 or 2 antennas may be connected
- 2 units: 1 antenna must be connected per unit

The wiring of the DIB-R5 outdoor is shown in *Chapter 3.5 “Wiring” on page 44*.

Depending on the operating mode, the respective (Tx/)Rx antennas must already be installed and the corresponding connecting cables must be available at the mounting position of the DIB-R5 outdoor unit(s).

For specifications on the cables required, please refer to *Chapter 5.6.2.3 “Cable specifications for the data and RF cables” on page 63*.

Responsibility for the installation, commissioning and maintenance of an antenna system

The network operator is responsible for the proper installation, commissioning and maintenance of a suitable antenna system unless this is an integral part of the contract with the Hytera Mobilfunk GmbH. An installer who may have been entrusted with the installation/commissioning and/or maintenance of the antenna system is responsible for complying with all the applicable requirements and for the metrological tests required afterwards. In addition, equipment for protecting the antenna cables against lightning must be provided.

5.4.2 Requirements of the GNSS antenna (recommended)

The GNSS antenna (Global Navigation Satellite System) is used for receiving the GNSS signal (e.g. GPS or Glonass).

Each unit of the DIB-R5 outdoor features a GNSS antenna connection. The number of required GNSS antennas depends on the network requirements. If synchronization is performed via GNSS, at least one GNSS antenna is required. The GNSS signal is distributed to interconnected DIB-R5 outdoor units, unless each unit has a separate GNSS antenna.

Mobile radio networks with time synchronization via ethernet – optional

In ACCESSNET-T IP the time synchronization of all network elements is possible via ethernet (Precision Time Protocol, PTP).

The site of the GNSS antenna must be selected so that the reception is not impaired by obstacles since satellites do not have geostationary positioning.

When using GNSS, the antenna is best installed on the roof of a building. It is also possible to install it on an upright pole. Irrespective of the installation method used, always ensure a good circumferential visibility (angle for unobstructed sight of the sky according to the recommendations of the manufacturer). The orientation of the GNSS antenna must ensure that at least four satellites are received.

Between the GNSS antenna and the Tx antenna(s), a space of at least 5 m must be maintained since the greatest possible isolation must be established. This is required because the harmonics of the transmitting signal could interfere with the GNSS signal.

For specifications on the cables required, please refer to *Chapter 5.6.2.3 “Cable specifications for the data and RF cables” on page 63*.

Responsibility for the installation, commissioning and maintenance of the GNSS antenna

The network operator is responsible for the proper installation, commissioning and maintenance of the GNSS antenna unless this is an integral part of the contract with the Hytera Mobilfunk GmbH.

The network operator is responsible for ensuring that:

- the installation site of the GNSS antenna is suitable for installing the antenna, e.g. the roof or the wall of a building or an antenna mast.
- if an antenna mast is used, it is installed including any required security devices as a protection against outside influences e.g. a storm.
- equipment for overvoltage protection and lightning protection of the GNSS antenna has been provided at the installation site. In this case, ensure that the amplifier integrated into the GNSS antenna is supplied V_{DC} voltage via the antenna cable.

5.5 Grounding

The following chapter describes the requirements of the installation site/operation room that must always be ensured for operating the product as intended. The country-specific regulations or the laws of the respective country of use shall apply to the grounding and the overvoltage protection.

Each DIB-R5 outdoor unit provides a grounding connector for connecting the protective conductor, which must be available at the installation site.

The protective conductors must comply with the requirements of DIN VDE 0100 Part 540 (IEC 60364-5-54). According to DIN EN 62305-1 (VDE0185-305-1), potential equalization must be installed between the lightning protection system and the electrical system.

Standards and provisions

Possible as the case may be required measures for the installation of grounding and bonding appliances of telecommunications equipment can be found in ETSI EN 300 253 V2.1.1.

All currently applicable laws and regulations of the respective country of use must always be applied.

5.6 Requirements for the electric system

The present chapter describes the requirements that must always be ensured for the intended use and proper operation of the product.

Requirements may depend on the expansion stage

The requirements on the site may depend on the respective expansion stage of the product and can vary depending on the number of installed units. For this reason, the respective expansion stage must be known.

5.6.1 Overvoltage protection

The following chapters describe the requirements for overvoltage protection:

- *Overvoltage protection of the product*
- *Overvoltage protection of the power supply (V_{DC})*
- *Overvoltage protection of the supply lines*

5.6.1.1 Overvoltage protection of the product

Every unit features a bipolar power supply connector for the isolated and floating 48 V_{DC} power supply. For grounding the DIB-R5 outdoor is equipped with a dedicated screw socket.

Responsibility for the installation, commissioning and maintenance of a grounding and overvoltage system

The network operator is responsible for the proper installation, commissioning and maintenance of a suitable grounding and overvoltage system, unless this is an integral part of the contract with Hytera Mobilfunk GmbH. We recommend seeking an expert opinion and implementing corresponding safety measures.

It must also be ensured that all interfaces of the product are secured against transient overvoltages. These short-term, inductive, capacitive or static overvoltages of a few milliseconds develop, e.g. by adjacent sources of interference and may thus interfere with power supply and signal supply lines.

5.6.1.2 Overvoltage protection of the power supply (V_{DC})

For V_{DC} power supply systems, ensure that the power source on site meets the following demands:

- The power supply circuit of the power source must not exceed 72 V_{DC}.
- The power source must be connected to a grounding system.

- Appropriate security measures must be taken to protect the power supply circuit of the power source against overvoltages.
- For each unit seperate power supply cables including appropriately dimensioned fuses must be available from the power source to the installation site.

Standards and provisions

Potential or required measures for establishing security measures against transient excess voltages with V_{DC} power supply are specified in the standard ETSI TR 100 283.

All currently applicable laws and regulations of the respective country of use must always be applied.

Responsibility for the installation, commissioning and maintenance of a grounding and overvoltage system

The network operator is responsible for the proper installation, commissioning and maintenance of a suitable grounding and overvoltage system unless this is an integral part of the contract with the Hytera Mobilfunk GmbH. It is advisable to obtain the opinion of an expert and to implement the security measures accordingly.

5.6.1.3 Overvoltage protection of the supply lines

All the supply lines (RF and data supply cables) must be grounded and fused.

The following requirements must be met for being able to operate the product as intended:

- All the RF supply lines must be grounded appropriately.
- The GNSS supply line(s) must be protected by means of appropriate overvoltage protection elements, refer to *Table "Requirements for the lightning surge protector" on page 60*.
- All the data supply lines must be protected via appropriate snubbers.

When using a GNSS antenna, the GNSS supply lines at the site must be secured against high overvoltages with a grounded GNSS overvoltage primary protection.

Table 20: Requirements for the lightning surge protector

Property	Requirement/Value
Overvoltage discharger	Gas discharge tube Depending on the manufacturer, the gas discharge tubes may have to be ordered separately and integrated into the overvoltage discharger.
Trigger voltage	90 V

Responsibility for implementing overvoltage protection measures

The responsibility for the proper execution of the overvoltage protection measures is determined project-specifically as required.

5.6.2 Cable requirements and cable specifications

The cable requirements and the related cable specifications that must be met for the correct operation of the product on the site are stated in the following chapters.

For comfortable handling the cable glands of the DIB-R5 outdoor are dimensioned to allow ready-for-use cables.

5.6.2.1 General cable requirements

All the supply lines must be identified or labeled according to their functions, e.g. the grounding cable with "grounding + the name of the network element".

For the operation of the DIB-R5 outdoor the following requirements must be met:

- For outdoor operation cables must be used, that are weatherproof and are conform to local legal requirements.
- All cables and cable glands must be equipped with appropriate sealing inserts and sealing plugs for weather proofing and strain relief.

Responsibility for the choice and installation of cables and sealing inserts

The network operator is responsible for the proper choice and installation of suitable cables and sealing inserts, unless this is an integral part of the contract with Hytera Mobilfunk GmbH. We recommend seeking an expert opinion and implementing corresponding measures.

All the supply lines must be laid or hung up such that:

- the operation of the device is not impaired,
- there are no trip hazards for the operator,
- the required minimum clearances are observed, refer to *Chapter 5.1 “Mounting requirements” on page 53*,
- the manufacturer's specification/information for the cables and connectors used are followed. If necessary, contact the respective manufacturer to obtain this information.

Required excess cable lengths

The excess cable lengths required are derived from the corresponding termination points inside the unit and from the position of the unit in the operation room/at the site. The cables must not be subject to any tensile stress whenever the unit has to be moved for service work (refer to *Chapter 5.1 "Mounting requirements" on page 53*). An excess cable length of at least 1.5 m is recommended.

5.6.2.2 Cable specifications of power supply cables

For the proper operation of the product, power supply cables

- dimensioned according to the respective power consumption of each unit must be available, refer to *Table "Power consumption" on page 63*.
- must meet additional requirements and cable specifications as necessary, refer to *Table "Requirements and cable specifications for power supply cable" on page 62*.

Table 21: Requirements and cable specifications for power supply cable

Required number of power supply cables	1 per unit
Recommended length of power supply cables	Depends on the installation site
Recommended cross-section of power supply cables	1.5 mm^2

The power supply connector is adequate for power supply cables up to a cable cross section of max. 1.5 mm^2.

Length and cross section of the power supply cable

The length and cross section of the cable must always be taken into account for the specification of the power supply cable. It must be ensured that the required voltage is present at the DIB-R5 outdoor.

5.6.2.3 Cable specifications for the data and RF cables

The following table describes all possible cable types with their specifications.

Table 22: Cable specifications for data and RF cables

Interfaces	Cable type	Connection type	Impedance
Input connector	No specific requirements, e.g. bell wire may be used 24 to 16 AWG	Plug for cable cross sections (wire or stranded wire) from 0.2 to 1.5 mm^2 (24 to 16 AWG)	—
Ethernet	CAT7	RJ45	100 Ω
Optical connection (optional)	Optical fiber appropriate to chosen SFP module	SFP socket (Small Form-factor Pluggable, SFP)	—
RF antenna	coaxial	N connector	50 Ω
GNSS antenna	coaxial (max. 10 dB attenuation at 1500 MHz)	N connector	50 Ω

Optical connections

For outdoor operation optical connections are recommended instead of ethernet connections. Optical connections are beneficial in terms of lightning protection and electromagnetic compatibility of the network connection.

5.6.3 Power supply

Every unit features a bipolar power supply connector for the isolated and floating 48 V_{DC} power supply. For grounding the DIB-R5 outdoor is equipped with a dedicated screw socket.

Table 23: Power supply

Power supply	48 V_{DC} (maximum voltage range: 44 to 55 V_{DC}) Positive and negative voltages possible

Table 24: Power consumption

Number of carriers	1	2
Maximum power consumption	< 55 W @ 10 W Tx ToC < 75 W @ 20 W Tx ToC	< 110 W @ 10 W Tx ToC < 150 W @ 20 W Tx ToC

The following table describes the required number of power supply connectors on site depending on the power supply.

Table 25: Required power supply connectors per equipment rack/compact rack

Power supply	Required power supply connectors
V_{DC}	1

The following chapters describe the requirements concerning the electrical system as a factor of the power supply

5.6.3.1 Power supply (V_{DC})

To ensure the proper operation of the product, the requirements concerning the following site components must be met:

- *Cable specifications of power supply cables*
- *Power supply connector (V_{DC})*
- *Fuse protection (V_{DC})*

5.6.3.1.1 Power supply connector (V_{DC})

For the proper operation of the product, the connection of the power supply cable to the power supply has to be performed heeding the safety regulations for the respective installation site.

Standards and provisions	The requirements to the power supply of telecommunications equipment with direct current (DC) can be found in ETSI EN 300 132-2 V2.1.2. All currently applicable laws and regulations of the respective country of use must always be applied.

To control voltage fluctuations and to protect the product against voltage failures, the use of an uninterruptible power supply (UPS) is advisable.

A UPS serves for ensuring uninterrupted power supply in the case of voltage fluctuations or a temporary failure of the primary power supply. The dimensioning of the UPS depends on the duration of the time that may have to be bridged as well as on the consumer power the UPS needs to provide security for.

When dimensioning the cross section of the connecting cable between the UPS and the product, be sure to keep the voltage loss of the connecting cable as low as possible. Otherwise the UPS may not be able to provide the desired power failure bridging time. The power failure bridging time with the help of the UPS cannot be achieved, e.g. if the discharge protection threshold of the UPS plus the voltage loss of the connecting cable is less than the lower power supply limit value of the product with battery supply.

Responsibility of the network operator

The use of an uninterruptible power supply (UPS) is advisable. The network operator is responsible for the proper installation and operation of an appropriate UPS.

5.6.3.1.2 Fuse protection (V_{DC})

Every unit features a bipolar power supply connector for the power supply. For grounding the DIB-R5 outdoor is equipped with a separate connector. The DIB-R5 outdoor is equipped with internal fuses.

Insufficient fuse protection of the power supply may impair the operation of the product. The dimensioning of circuit breakers depends on

- the power consumption of the product, refer to *Table "Power consumption" on page 63*,
- the properties of the required power supply cable as well as the cable length, refer to *Chapter 5.6.2.2 "Cable specifications of power supply cables" on page 62*.

Standards and provisions

Required measures for dimensioning circuit breaker are specified in the standard DIN EN 60950-1, Product image - Information technology equipment - Safety - Part 1: General requirements.

All currently applicable laws and regulations of the respective country of use must always be applied.

5.7 Requirements on IP transport networks

The IP transport network is subject to technical requirements that must be adhered to for the operation of a ACCESSNET-T IP.

The DIB-R5 outdoor is connected to the IP transport network via a switch or router available at the site.

Redundant switches/routers

To provide additional security against failures of the switch/routers, they can be implemented redundantly at the site.

The requirements on the IP transport network are described in the related product documents, refer to the following table.

Table 26: Required product documents

Product	Document type
ACCESSNET-T IP	Requirement Manual IP/VoIP

Requirements on IP transport networks

6 Configuration

These chapter describes the procedure for the proper configuration of the product. The product is already prepared for initial download in its delivery state.

Recommendation

The DIB-R5 outdoor should be configured before installing it. Especially the initial download should be performed beforehand, as it cannot be performed remotely.

The work steps listed in the following table must be performed for the configuration of the DIB-R5 outdoor.

Table 27: Overview of the work steps to be performed (Configuration)

Work steps			Described in
Switching on the DIB-R5 outdoor			*Chapter 7.7 “Switching on the DIB-R5 outdoor” on page 88*
Configuring the DIB-R5 outdoor	*Preparatory measures*	*Connecting the service computer*	*Chapter 6.2.2.1 “Connecting the service computer” on page 69*
		Deleting the ARP buffer	*Chapter 6.2.2.2 “Deleting the ARP buffer” on page 69*
	Software download via platform image web client (initial configuration)		*Chapter 6.2.3 “Software download via platform image web client (initial configuration)” on page 70*

6.1 Safety measures and prerequisites

The following security measures and prerequisites must be observed for all activities:

- The safety regulations must be considered at all times, refer to *Chapter 2 “Safety regulations” on page 17*.
- Observe all other activity-based security measures and prerequisites in the work steps in this chapter.
- The required tools and materials must be available, refer to *Chapter 6.2.1 “Work equipment” on page 68*.

6.2 Configuring the DIB-R5 outdoor

The work steps listed in the following table must be performed for the configuration of the DIB-R5 outdoor.

Table 28: Overview of the work steps to be performed (configuring the DIB-R5 outdoor)

Work steps		Described in
Preparatory measures	*Connecting the service computer*	*Chapter 6.2.2.1 "Connecting the service computer" on page 69*
	Deleting the ARP buffer	*Chapter 6.2.2.2 "Deleting the ARP buffer" on page 69*
Software download via platform image web client (initial configuration)		*Chapter 6.2.3 "Software download via platform image web client (initial configuration)" on page 70*

6.2.1 Work equipment

The following table provides an overview of the work equipment required for the steps in this chapter.

Table 29: Overview of work equipment (configuring the DIB-R5 outdoor)

Work step	Work equipment
Connecting the service computer	■ Configured ACCESSNET-T IP service computer ■ Straight through Ethernet cable ■ For base station configurations with multiple units only: – Additional two Ethernet cables – Switch with at least five ports

Service computers not included in the scope of delivery

Service computers are not part of the product's scope of supply and are available separately.

6.2.2 Preparatory measures

Configuring DIB-R5 outdoor requires that the preparatory measures listed in the following table must be performed.

Table 30: Overview of preparatory measures (configuring the DIB-R5 outdoor)

Work steps	Described in
Connecting the service computer	*Chapter 6.2.2.1 "Connecting the service computer" on page 69*
Deleting the ARP buffer	*Chapter 6.2.2.2 "Deleting the ARP buffer" on page 69*

6.2.2.1 Connecting the service computer

The service computer may be any computer that meets the system requirements and has been configured accordingly.

The system requirements for the service computer are described in the related product documents, refer to the following table.

Table 31: Required product documents

Product	Document type	Described in
ACCESSNET-T IP	Installation Manual	Chapter 3

The connection of the service computer depends on the number of units:

- One unit: Connected directly to the unit (Ethernet port "INT0")
- Multiple units: Connected via a switch (min. five ports)

Connecting the service computer

Preparation:

- The working equipment must be available, refer to *Chapter 6.2.1 "Work equipment" on page 68*
- The service computer must have been started.
- The DIB-R5 outdoor must be switched on.

→ Connect the service computer accordingly.

- One unit: Connect the Ethernet cable to the Ethernet port "INT0" of the service computer and the unit.
- Multiple units: Connect the Ethernet ports "INT0" and "ACN0" of all units to the switch, using the additional Ethernet cables.

➔ The task is finished.

6.2.2.2 Deleting the ARP buffer

The assignments of IP addresses to hardware addresses of network adapters (MAC address) are stored in the ARP (Address Resolution Protocol) buffer.

Deleting the ARP buffer

Preparation:

- The service computer must be connected.

1. Call up the command prompt via the *"Windows Start menu ➔ Programs ➔ Accessories ➔ Command prompt"*.

   ⇨ The command prompt is displayed.

2. Enter the command below to delete the ARP buffer:

   arp -d

3. If necessary, you can use the following command to display entries in the ARP buffer:

   arp -a

➔ The task is finished.

6.2.3 Software download via platform image web client (initial configuration)

The platform image provides a web-based user interface for initial configuration. The platform image web client can be reached via the browser on the service computer.

The procedures for this purpose are described in corresponding documents, refer to the following table.

Table 32: Required product documents

Product	Document type
ACCESSNET-T IP	Installation Manual

7 Setup and commissioning

This chapter describes the procedure for connecting the electrical system properly and for commissioning the product on site.

The individual steps listed in the following table must be executed for the commissioning of the product.

Table 33: Overview of the work steps to be performed (setup and commissioning)

Work steps		Described in
Installing the DIB-R5 outdoor	*Installing the mounting bracket*	*Chapter 7.3.1 "Installing the mounting bracket" on page 74*
	Mounting and removing the DIB-R5 outdoor into/ from the mounting bracket	*Chapter 7.3.2 "Mounting and removing the DIB-R5 outdoor into/from the mounting bracket" on page 78*
	Connecting the DIB-R5 outdoor to the grounding system	*Chapter 7.3.3 "Connecting the DIB-R5 outdoor to the grounding system" on page 79*
	Wiring the connection board	*Chapter 7.3.4 "Wiring the connection board" on page 80*
Connecting units		*Chapter 7.4 "Connecting units" on page 85*
Installing the GNSS antenna		*Chapter 7.5 "Installing the GNSS antenna" on page 86*
Connecting antennas (GNSS and TETRA)		*Chapter 7.6 "Connecting antennas (GNSS and TETRA)" on page 87*
Switching on the DIB-R5 outdoor		*Chapter 7.7 "Switching on the DIB-R5 outdoor" on page 88*

7.1 Safety measures and prerequisites

The following security measures and prerequisites must be observed for all activities:

- Devices are sold in the region of the Eurasian Economic Commission Customs Union [EECCU] in original packaging and in compliance with the national laws of the countries of the customs union.
- All the supply lines/cables must be passed or suspended in a way ensuring that
  - the operation of the device is not impaired,
  - there are no trip hazards for the operator or any other persons,
  - the required minimum distances and cable lengths are complied with.
- The site must be prepared in compliance with chapter *Chapter 5 “Site requirements for the DIB-R5 outdoor” on page 53*.
- The product must have been configured according to chapter *Chapter 6.2 “Configuring the DIB-R5 outdoor” on page 68*.
- The DIB-R5 outdoor may be set up and put into operation only if the required environmental conditions have been met at all times, refer to *Table “Environmental conditions” on page 55*.
- The safety regulations must be considered at all times, refer to *Chapter 2 “Safety regulations” on page 17*.
- Observe all other activity-based security measures and prerequisites in the work steps in this chapter.
- The required tools and materials must be available, refer to *Chapter 7.2 “Tools, Aids and Materials” on page 72*.

7.2 Tools, Aids and Materials

The following table provides an overview of the tools, aids and materials required for the work steps in this chapter.

Table 34: Overview of tools, aids and materials (setup and commissioning)

Work step	Tools, aids	Materials
Installing the lock into the mounting bracket	Wrench size 10 and 27 for the lock	---
Installing the mounting bracket to a wall	Tools depending on the screws used	Screws and wall plugs depending on the material of the wall
Installing the mounting bracket to a mast	■ Wrench size 17 for the mast bracket ■ Size TX30 Torx screwdriver for the mounting bracket	DIB-R5 outdoor mast bracket
Mounting the DIB-R5 outdoor to the mounting bracket	■ Key for the lock ■ Size TX30 Torx screwdriver	2 TX30 screws size M6
Connecting the DIB-R5 outdoor to the grounding system	Tools depending on the screws used	1 M8 screw

Work step	Tools, aids	Materials
Defining the reference potential – for V_{DC} power supply	depending on the power supply and electrical system used	
Removing/installing the connection board	Size TX20 Torx screwdriver	---
Electrical connection	■ Side cutting pliers ■ Cable stripper ■ Flat-bladed screwdriver size 3.5	■ Power supply cable (max. 1.5 mm^2 or 16 AWG) ■ Sealed cable glands with fitting inserts
Connecting external input	■ Side cutting pliers ■ Cable stripper ■ Flat-bladed screwdriver size 3.5	■ Cable (max. 1.5 mm^2 or 16 AWG) ■ Sealed cable glands with fitting inserts
Connecting the network connections	■ Side cutting pliers ■ Cable stripper ■ Crimping tool for RJ45 connector ■ Optical fiber splicing tool (optional)	■ Network cables according to chapter *Chapter 5 "Site requirements for the DIB-R5 outdoor" on page 53* ■ RJ45 connector (unless already fastened on the ethernet cable) ■ Optical fiber connector according to the optical fiber cable and the SFP module used ■ Fastening material (cable tie) ■ Sealed cable glands with fitting inserts
Installing the GNSS antenna	depending on the GNSS antenna used	depending on the GNSS antenna used
Connecting antennas (GNSS and TETRA)	The required tools depend on the antenna cable used and the related connector. The product is equipped with three (3) female N connectors 50 Ω for then antennas.	Antenna cable

7.3 Installing the DIB-R5 outdoor

The following chapters describe the procedures for installing the DIB-R5 outdoor on a site.

7.3.1 Installing the mounting bracket

The DIB-R5 outdoor is delivered with a mounting bracket for wall and mast installation.

7.3.1.1 Installing the lock into the mounting bracket

The lock of the DIB-R5 outdoor for theft protection has to be installed into the mounting bracket best before carrying the parts up a mast.

Installing the lock into the mounting bracket

Preparation:

- The tools, aids and materials specified must be available.

1. Remove the latch and nut from the lock.
2. Insert the lock into the mounting bracket from the outside.
3. Reinstall the nut and latch back onto the lock.

➔ The task is finished.

7.3.1.2 Installing the mounting bracket to a wall

A unit can be installed onto walls or plane surfaces. Screws and other installation material has to be chosen according to the material of the wall. The following graphic shows the mounting bracket in detail.

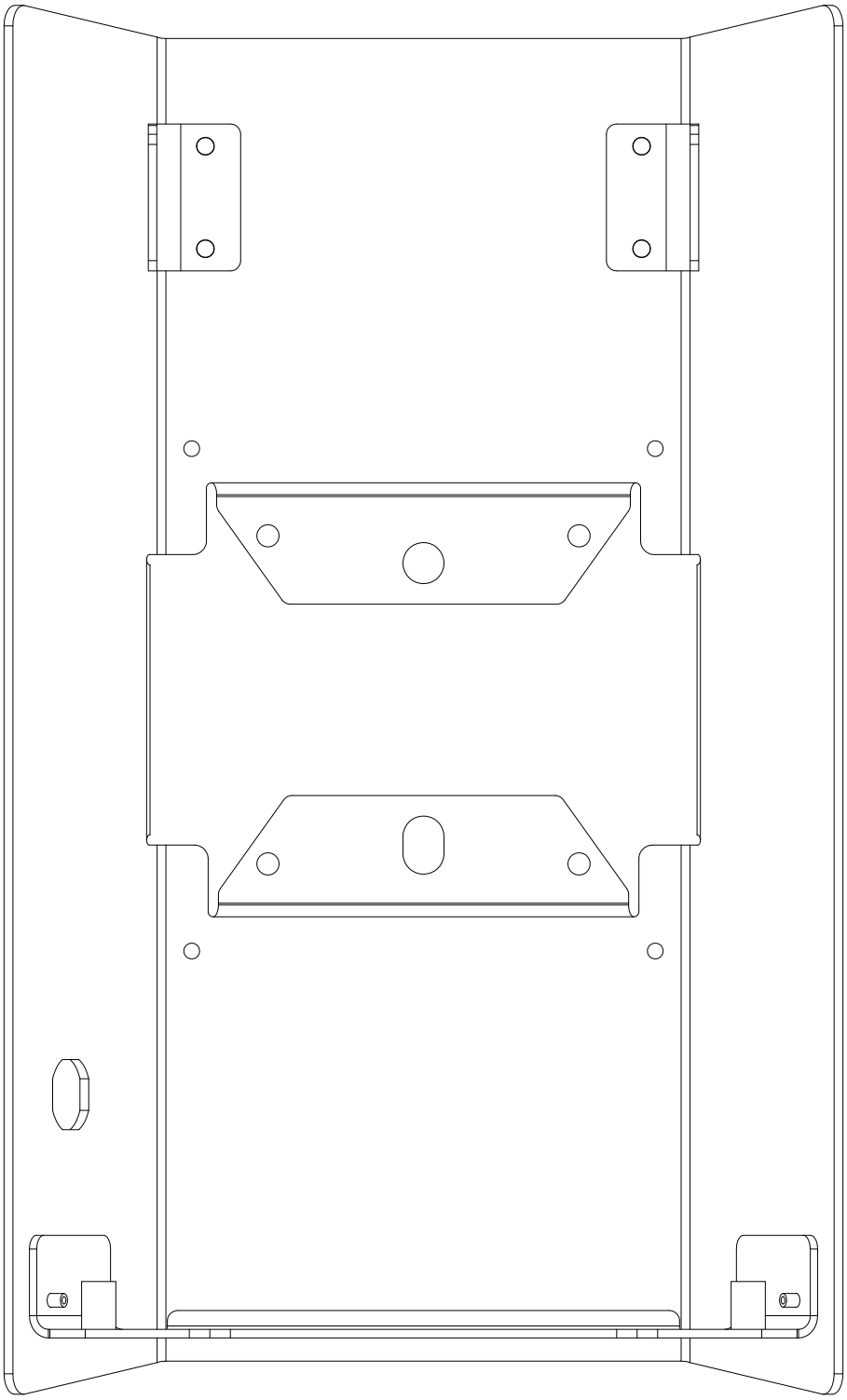

Figure 16: Mounting bracket

Installing the mounting bracket to a wall

Preparation:

- The installation material according to the present type of wall has to be available.

Site-specific installation

The installation of the mounting bracket is site-specific depending on e.g. the material of the wall.

→ Install the mounting bracket to the wall using the two large or four small drill holes in the mounting bracket, refer to *Chapter 5.1 “Mounting requirements” on page 53*.

➔ The task is finished.

7.3.1.3 Installing the mounting bracket to a mast

A unit can be installed onto antenna masts. The Hytera mast bracket, refer to *Chapter 3.8 “Order information” on page 49*, shall be used for this purpose. The mast bracket consists mainly of two metal brackets and corresponding screws, washers etc. The following graphic shows the mast bracket in detail.

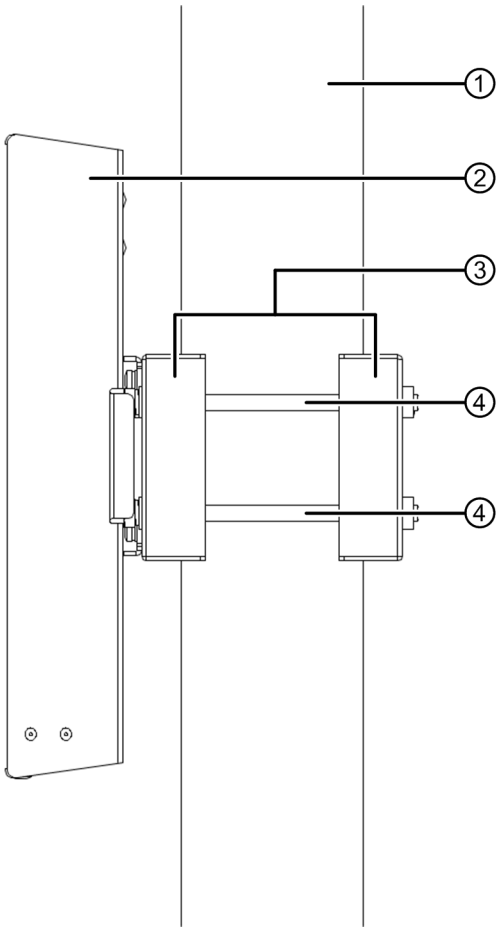

Figure 17: Mounted mast bracket with mounting bracket

Table 35: Legend: Mounted mast bracket with mounting bracket

No.	Description
1	Mast
2	Mounting bracket
3	Mast bracket (front and back part)
4	Screws (wrench size 17) for connecting front and back part of the mast bracket

DANGER

Danger through falling parts

Especially while installing the DIB-R5 outdoor to an antenna mast in greater heights falling parts, tools or materials can be a danger for personnel on the ground.

➔ Clear the ground area of the antenna mast of other people.

➔ Secure all material and the DIB-R5 outdoor unit itself against falling down.

DANGER

Heed personal safety

Installing equipment on antenna masts is done in great heights. Falling down can cause severe injuries.

➔ Always heed personal safety when working in great heights.

Installing the mounting bracket to a mast

Preparation:

- The tools, aids and materials specified must be available.

1. Slide the four screws (wrench size 17) screws through the washers in the following order:
   - 1 – Spring washer
   - 2 – Plain washer
2. **Site-specific installation**

   The installation of the mounting bracket is site-specific depending on e.g. the diameter of the mast or tube.

   Install the two metal brackets to the mast or tube using the four screws (wrench size 17), refer to *Chapter 5.1 "Mounting requirements" on page 53*.
3. Install the mounting bracket to the mast bracket using the four screws (size TX30).

➔ The task is finished.

7.3.2 Mounting and removing the DIB-R5 outdoor into/from the mounting bracket

The unit is mounted into the mounting bracket with the mounting hooks and can be replaced without removing the mounting bracket from the wall or mast. Steps 3 and 4 may have to be performed at a later point in time after connecting all cables.

Removing the DIB-R5 outdoor from the mounting bracket

The DIB-R5 outdoor is being removed from the mounting bracket in reverse order compared to the work steps described in this chapter.

Mounting the DIB-R5 outdoor into the mounting bracket

Preparation:

- The mounting bracket must already be installed.
- The cables have to be installed.
- The connection board has to be wired.
- The power source for the site must be switched off.
- Cable grommets according to the cables being used have to be available.
- The key for locking the unit has to be available.

1. Open the built-in lock.
2. Hang the unit into the mounting bracket using the mounting hooks on each side.

   ⇨ The unit is secured from falling down but can be swiveled forwards.
3. Swivel the bottom of the unit slightly forwards and slide the connection board into the housing, refer to *Chapter 7.3.4.6 “Sliding the connection board into the housing” on page 84*.
4. **First time mounting the unit into the mounting bracket**

   Before mounting the unit into the mounting bracket for the first time, the M6 TX30 screws have to be inserted into the mounting bracket. After that they cannot fall out by themselves.

   Secure the unit to the mounting bracket using the M6 TX30 screws, refer to Figure 7.
5. Lock the unit to the mounting bracket.

➔ The task is finished.

7.3.3 Connecting the DIB-R5 outdoor to the grounding system

A screw socket for grounding is located at the bottom of each unit, refer to Figure 7.

Connecting the DIB-R5 outdoor with the grounding system

Preparation:

- The site must be prepared in compliance with chapter *Chapter 5 “Site requirements for the DIB-R5 outdoor” on page 53*.
- The green-yellow grounding cable must already be connected with the grounding system.

- The tools, aids and materials specified must be available, refer to *Chapter 7.2 "Tools, Aids and Materials" on page 72*.
- The reference potential for V_{DC} power supply must have been defined depending on the grounding (reference potential) on site. Negative terminal grounding or positive terminal grounding can be used.

NOTICE

Cable damage

Routing cables over sharp edges or in a less than acceptable bending radius can damage the cables.

➔ Never route cables over sharp edges and always maintain to the bending radius.

1. Slide the grounding screw through the washers and grounding cable in the following order:
   - 1 – Spring washer
   - 2 – Plain washer
   - 3 – Eye of the grounding cable
2. Fasten the M8 grounding screw into the screw socket using the respective tool.

➔ The task is finished.

7.3.4 Wiring the connection board

The DIB-R5 outdoor features a detachable connection board (slider unit) for all connections except antennas and grounding. The connection board can be prepared with all cables and installed into the DIB-R5 outdoor in one step.

The following chapters describe the connections to be made on the connection board.

7.3.4.1 Removing the connection board

The connection board is installed by captive Torx screws.

Removing the connection board

Preparation:

- The power supply must be switched off.

1. Loosen the TX30 screws securing the unit to the bracket, refer to Figure 7.
2. Swivel the unit slightly forwards until you can unscrew the captive TX20 screws.
3. Remove the connection board:
   - Hanging in the housing by the spring mechanism
   - Completely if you need more freedom to move the connection board

➔ **The task is finished.**

7.3.4.2 Checking the mode of the unit

If multiple units are being used at one installation site, the modes of the units have to be set.

Checking the mode of the unit

Preparation:

- The power supply must be switched off.
- The unit must be connected to the grounding system.

1. Locate the DIP switch on the connection board.
2. Set the DIP switch the following:
   - "Master" for the primary unit connected to the IP transport network.
   - "Slave" for the secondary unit connected to the primary unit.

➔ **The task is finished.**

7.3.4.3 Connecting the V_{DC} power supply

7.3.4.3.1 Connection board IFB6

The 48 V_{DC} power supply is wired to the unit without additional e.g. wire end sleeves.

Connecting the V_{DC} power supply

Preparation:

- The power supply must be switched off.
- The unit must be connected to the grounding system.
- The power supply cable must be installed.

1. Remove about 5 mm of insulation from the cable.
2. Feed the cable through the grommets or holes to the inside of the connection board.
3. Feed the wires into the corresponding connectors using a flat-headed screwdriver:
   - Positive voltage wire into connector "48 V +"
   - Negative voltage wire into connector "48 V -"

➔ **The task is finished.**

Make sure that the power cable and the network connection do not intersect when connecting.

7.3.4.3.2 Connection board IFB9

The 48 V_{DC} power supply is wired to the unit without additional e.g. wire end sleeves.

Connecting the V_{DC} power supply

Preparation:

- The power supply must be switched off.
- The unit must be connected to the grounding system.
- The power supply cable must be installed.

1. Remove about 5 mm of insulation from the cable.
2. Plug the mounting ring of the cable gland onto the cable.
3. Feed the cable through the sealing insert.
4. Feed the cable with the sealing insert through the grommets or holes to the inside of the connection board.
5. Feed the wires into the corresponding connectors using a flat-headed screwdriver:
   - Positive voltage wire into connector "+48V"
   - Negative voltage wire into connector "-48V"

NOTICE

Cable damage

– Make sure that the cables do not bend when screwing the cable gland.
– Make sure that the power cable and the network connection do not intersect when connecting.

➔ The task is finished.

7.3.4.4 Connecting external inputs

The external inputs are provided by the connection board.

Connecting external inputs

Preparation:

- The power supply must be switched off.
- The unit must be connected to the grounding system.
- The external input cable must be installed.

1. Remove about 5 mm of insulation from the cable.
2. Feed the cable through the grommets or holes to the inside of the connection board.
3. Feed the wires into the corresponding connectors using a flat-headed screwdriver:
   - Connector "E1": Ground (GND) wire
   - Connector "E2": Hot wire (approx. 4 V_{DC})

➔ The task is finished.

7.3.4.5 Connecting the network connections

7.3.4.5.1 Connection board IFB6

For network connection Ethernet/RJ-45 or optical SFP connector can be used. The unit detects the connection automatically. Both connections cannot be used at the same time.

Connecting the network connections

Preparation:

- The power supply must be switched off.
- The unit must be connected to the grounding system.
- The network cable(s) must be installed.
- Connectors must be installed to the network cable(s).

NOTICE

Ethernet/RJ-45 cable

When using a crossed cable the unit do not have connection to the switch.

➔ Use a straight through cable for connecting the unit. The LEDs should light up, refer to *Table “Legend: Indicators (LEDs) of the connection board” on page 41*.

1. Feed the cable through the grommets or holes to the inside of the connection board.
2. Feed the wires into the corresponding connectors:
   - SFP1 (optical) or ACN0 (ethernet) for connection to the IP transport network
   - INT0 (ethernet) for connection to a second unit with Digital Diversity (DDV)
     To ensure that DDV works properly, the two units must be directly connected to each other.

➔ The task is finished.

7.3.4.5.2 Connection board IFB9

For network connection Ethernet/RJ-45 or optical SFP connector can be used. The unit detects the connection automatically. Both connections cannot be used at the same time.

Connecting the network connections

Preparation:

- The power supply must be switched off.
- The unit must be connected to the grounding system.
- The network cable(s) must be installed.
- Connectors must be installed to the network cable(s).

1. **NOTICE**

   Ethernet/RJ-45 cable

   When using a crossed cable the unit do not have connection to the switch.

   ➔ Use a straight through cable for connecting the unit. The LEDs should light up, refer to *Table "Legend: Indicators (LEDs) of the connection board" on page 41*.

   Plug the mounting ring of the cable gland onto the cable.
2. Feed the cable through the sealing insert.
3. Feed the cable with the sealing insert through the grommets or holes to the inside of the connection board.
4. Feed the wires into the corresponding connectors:
   - SFP1 (optical) or ACN0 (ethernet) for connection to the IP transport network
   - INT0 (ethernet) for connection to a second unit with Digital Diversity (DDV)
     To ensure that DDV works properly, the two units must be directly connected to each other.

NOTICE

Cable damage

– Make sure that the cables do not bend when screwing the cable gland.
– Make sure that the power cable and the network connection do not intersect when connecting.

➔ The task is finished.

7.3.4.6 Sliding the connection board into the housing

7.3.4.6.1 Connection board IFB6

The connection board is installed by captive Torx screws. The cable grommets can be installed after the connection board is wired and slided into the housing of a unit. This way stress onto the connectors of the connection board is reduced to a minimum.

Sliding the connection board into the housing

Preparation:

- The power supply must be switched off.
- The wiring of the connection board has to be completed.
- The sealing plugs have to be available if needed.

1. Swivel the unit slightly forwards.
2. Install the split cable glands with correct sealing inserts and sealing plugs. Refer to PDF attachment "AssemblyUNISplitGlandHD.pdf".
3. Slide the connection board into the housing. It cannot be installed in a wrong direction.
4. Tighten the captive TX20 screws of the connection board.
5. Tighten the TX30 screws securing the unit to the bracket, refer to Figure 7.

➔ The task is finished.

7.3.4.6.2 Connection board IFB9

The connection board is installed by captive Torx screws.

Sliding the connection board into the housing

Preparation:

- The power supply must be switched off.
- The wiring of the connection board has to be completed.
- The sealing plugs have to be available if needed.

1. Swivel the unit slightly forwards.
2. Slide the connection board into the housing. It cannot be installed in a wrong direction.
3. Tighten the captive TX20 screws of the connection board.
4. Tighten the TX30 screws securing the unit to the bracket, refer to Figure 7.

➔ The task is finished.

7.4 Connecting units

A DIB-R5 outdoor with two TETRA carriers consists of two units. These units have to be interconnected by a network connection. Power supply is separate for each unit.

To ensure that Digital Diversity (DDV) works properly, the two units must be directly connected to each other.

Connecting units

Preparation:

- All cables including the network interconnection have to be available and installed on site.

1. Set the DIP switch of the second unit to "Slave", refer to *Chapter 7.3.4.2 “Checking the mode of the unit” on page 81*.
2. Install both units to the installation site as described, refer to *Chapter 7.3 “Installing the DIB-R5 outdoor” on page 73*.

➔ The task is finished.

7.5 Installing the GNSS antenna

The product's scope of delivery does not contain a GNSS antenna so that a GNSS antenna from a different manufacturer must be used. In this case, heed the documentation of the respective manufacturer included in the scope of delivery of the antenna to prevent impairments and malfunctions of the DIB-R5 outdoor.

GPS redundancy DIB-R5 outdoor

To ensure GPS redundancy it is recommended to use one GNSS antenna per unit.

Only GNSS antenna specified and tested in compliance with the following standard may be used in combination with the DIB-R5 outdoor: DIN EN 61000-4-5/IEC 61000-4-5 Level 4. When using different GNSS antennas, overvoltage protection is not guaranteed.

The required cable specifications are described in chapter *Chapter 5 “Site requirements for the DIB-R5 outdoor” on page 53*.

Responsibility for the installation, commissioning and maintenance of the GNSS antenna

The network operator is responsible for the proper installation, commissioning and maintenance of the GNSS antenna unless this is an integral part of the contract with the Hytera Mobilfunk GmbH.

The network operator is responsible for ensuring that:

- the installation site of the GNSS antenna is suitable for installing the antenna, e.g. the roof or the wall of a building or an antenna mast.
- if an antenna mast is used, it is installed including any required security devices as a protection against outside influences e.g. a storm.
- equipment for overvoltage protection and lightning protection of the GNSS antenna has been provided at the installation site.

7.6 Connecting antennas (GNSS and TETRA)

For the antenna connections the DIB-R5 outdoor provides RF connectors at the bottom. For proper operation, the TETRA antennas and a GNSS antenna must be connected.

Since the DIB-R5 outdoor allows different antenna configurations, the connection of the antennas is defined project-specific. The required antenna configuration can be found in the project-specific documents.

Possible antenna configurations are shown in *Chapter 3.5 “Wiring” on page 44*.

Connecting antenna(s)

Preparation:

- The site must be prepared in compliance with *Chapter 5 “Site requirements for the DIB-R5 outdoor” on page 53*.
- The DIB-R5 outdoor must be connected to the grounding system.
- Appropriate antenna cables of the required lengths must be available.
- The power source must be switched off.

1. If required, remove the protective caps from the antenna connectors.
2. Install the surge arresters, refer to *Chapter 5.4 “Antennas” on page 56*.

Cable-specific tools and work steps

The required tools and work steps depend on the antenna cable used and the related connector.

NOTICE

Cable damage

Routing cables over sharp edges or in a less than acceptable bending radius can damage the cables.

➔ Never route cables over sharp edges and always maintain to the bending radius.

NOTICE

Risk of damage from electrostatic discharge (ESD)

The base station can be damaged if antennas are connected or disconnected during the switched-on state. The GNSS antenna connection is particularly sensitive to electrostatic discharge (ESD).

➔ Ensure that the base station is switched off before connecting or disconnecting antennas.

3. Connect the required antennas to the bottom side of the DIB-R5 outdoor, refer to Figure 7.

➔ **The task is finished.**

7.7 Switching on the DIB-R5 outdoor

The product is switched on via the power source only. The product has no integrated on/off switch. After switching on the power source, the DIB-R5 outdoor will start up automatically. Connections will be enabled. The unit is started up after approx. two minutes.

To switch on the product, the connections must have been connected properly. The procedure for switching on the voltage source depends on the circumstances at the respective installation site.

Checking the power status

- **Connection board IFB6**
  As the DIB-R5 outdoor with connection board IFB6 has no indication of the power status on the housing, the switch for connection to the IP transport network can be used to check the power status of the product.
  ➔ If the product has started up, the switch on site has to indicate an active network connection on the respective ports.
- **Connection board IFB9**
  For indication of the power status the LEDs on the connection board can be used.
  ➔ If the product has started up, the *RUN* LED lights.

Switching on the DIB-R5 outdoor

8 Service interruption

This chapter describes the procedure for the service interruption of the product.

A service interruption may be required in the following cases:

- Work on e.g. the wiring of a DIB-R5 outdoor unit
- The replacement of defective components
- End of operation
- Malfunction
- Integration of further components

Possible restrictions for the operation

If a product is taken out of service, the operation of other parts in the radio network may be impaired as well. Discuss this problem with your service partner to obtain detailed information on risks and on recommended procedures.

8.1 Switching off the DIB-R5 outdoor

The procedure for switching off the DIB-R5 outdoor is described below.

CAUTION

Risk of hot surface

Wait one-half hour after switching off the product before handling parts.

Switching off the DIB-R5 outdoor

1. Switch off the power source at the site. Alternatively you can switch off the fuse of the sub-distribution.

   Risk of electric shock

   Ensure by means of switch interlock that a source of electrical power cannot be switched on unintentionally by an unauthorized third person.

2. Use a voltmeter to check whether the supply lines from the power source at the site are DE-energized.

➔ The task is finished.

8.2 Permanent service interruption

This chapter describes the procedure for properly performing a permanent service interruption of the product.

For a permanent service interruption, all physical connections routed to the outside must be disconnected in addition to the switch-off. This requires that DIB-R5 outdoor is already switched off.

The following table provides an overview of the order for disconnecting physical connections from the DIB-R5 outdoor.

Table 36: Disconnecting physical connections (order)

Order	Physical connection
1	Ethernet/network cable
2	External inputs
3	Antenna cable: ■ GNSS antenna ■ TETRA antenna(s)
4	Power supply cable
5	Grounding cable

Sequence for recommissioning

For the recommissioning, the connections must be established in reverse order.

Permanent service interruption

Preparation:

- The power source must be switched off.

DANGER

Risk of electric shock

Electric shock when touching live parts. Installed hardware components are energized.

➔ Deploy a switch interlock to ensure that the deactivated power source(s) cannot be activated thoughtlessly by a third person.

→ Remove any physical connections from the DIB-R5 outdoor accordingly to the sequence in *Table "Disconnecting physical connections (order)" on page 92*.

➔ The task is finished.

Recommissioning

For recommissioning after a permanent service interruption, proceed as described in
↳ *Chapter 7 “Setup and commissioning” on page 71*.

Permanent service interruption

9 Maintenance

To ensure the proper operation of products, maintenance tasks and periodical visual inspections are required.

The products have been designed for permanent and unsupervised operation. Nevertheless you have to perform checks every now and then. When doing so, you can detect and remove e.g. dirt in the vicinity of or within equipment racks, so the air supply and heat dissipation of the products is always ensured.

Possible restrictions

Depending on the maintenance tasks and redundancy options, not all functions and features may be available for the duration of the maintenance tasks.

The current state of the hardware components can be monitored via an Network Element Manager. For additional information about the Network Element Manager, refer to the corresponding product documentation.

9.1 Maintenance tasks

The required activities for maintaining the product are listed below. The maintenance tasks must be performed in the intervals specified to ensure the proper operation of the product. Contaminations can, for example, impede the air supply and heat dissipation and negatively impact operation.

Table 37: Maintenance tasks

Task/s	Interval/s
Cleaning the heat sink	Depends on the environmental conditions and on e.g. bird droppings
Connecting GNSS antenna for time synchronization – only if operated without permanently connected GNSS antenna	Once every year

9.2 Periodical visual inspections

The table below lists the recommended tasks for maintaining the products. The visual inspections should be performed in the intervals specified to be able to respond in due time, e.g. in the case of changes at the site that may result in improper operation.

The specified intervals refer to the operation within the defined environmental conditions, refer to *Table “Environmental conditions” on page 55*.

Shorter intervals may be required

Depending on the respective environmental conditions at the site of the product, shorter intervals may be required.

We recommend logging the results of the test.

Table 38: Tasks and intervals for visual inspections

Task/s	Interval/s
Site inspection based on the document *DIB-R5 outdoor Site Requirements*, e.g. the inspection of the: ■ Grounding equipment ■ TETRA antennas ■ Installation location of the GNSS antenna ■ Condition and fit of all supply lines, renew if necessary ■ Connection between multiple units – only with multiple carriers	■ Upon site changes ■ Once every year
Check the condition of the product with respect to: ■ Operational readiness (checking operating states) ■ Dirt and dust accumulations on the unit, remove if necessary ■ Degree of contamination of contact pins, remove dirt if necessary	Once every year
Checking function of external inputs – if wired	Once every year
Checking standby carriers – if available	Once every year

10 Component replacement

This chapter describes the procedures for replacing hardware components.

The product has been designed for continuous operation. In a few cases, however, it may be required to replace installed hardware components and/or update software components installed on the hardware components.

Possible reasons:

- Replacement due to network optimization
- Replacement due to disruption in operation

10.1 Safety measures and prerequisites

The following security measures and prerequisites must be observed for all activities:

- Devices are sold in the region of the Eurasian Economic Commission Customs Union [EECCU] in original packaging and in compliance with the national laws of the countries of the customs union.
- The site must be prepared in compliance with chapter *Chapter 5 "Site requirements for the DIB-R5 outdoor" on page 53*.
- The safety regulations must be considered at all times, refer to *Chapter 2 "Safety regulations" on page 17*.
- Observe all other activity-based security measures and prerequisites in the work steps in this chapter.
- The required tools and materials must be available.
- Note that the component replacement of individual hardware components may require preparatory and finalizing tasks. The are described at the beginning of the corresponding chapter.
- Keep all the materials e.g. mounting screws in a safe place. You will need them again.
- Cables removed must be correctly reconnected on fitting the components. Mark the cables accordingly to ensure that they are connected properly.

10.2 Tools, Aids and Materials

The required tools, aids and materials are listed in the respective chapters linked onto.

10.3 Replacing the connection board (slider unit)

The following table provides an overview of the work steps for replacing the connection board (slider unit).

Table 39: Overview of the work steps to be performed

Work steps	Described in
Switching off the DIB-R5 outdoor	*Chapter 8.1 “Switching off the DIB-R5 outdoor” on page 91*
Wiring the connection board	*Chapter 7.3.4 “Wiring the connection board” on page 80*

10.4 Replacing a DIB-R5 outdoor unit

The following table provides an overview of the work steps for replacing a unit of the DIB-R5 outdoor.

Table 40: Overview of the work steps to be performed

Work steps	Described in
Switching off the DIB-R5 outdoor	*Chapter 8.1 “Switching off the DIB-R5 outdoor” on page 91*
Removing the connection board	*Chapter 7.3.4.1 “Removing the connection board” on page 80*
Permanent service interruption	*Chapter 8.2 “Permanent service interruption” on page 92*
Mounting and removing the DIB-R5 outdoor into/from the mounting bracket	*Chapter 7.3.2 “Mounting and removing the DIB-R5 outdoor into/from the mounting bracket” on page 78*
Wiring the connection board	*Chapter 7.3.4 “Wiring the connection board” on page 80*
Sliding the connection board into the housing	*Chapter 7.3.4.6 “Sliding the connection board into the housing” on page 84*

11 System restore

This chapter describes the procedures for the system restore of hardware components.

In cases when a unit no longer boots up and, as a result, can no longer be reached through the Network Element Manager (NEM), the system may have to be restored on site. For this purpose, a platform image is being imported with which the unit is set to the specified default factory setting.

Consulting the service of Hytera Mobilfunk GmbH

The system restore should be performed only after consulting with the service of Hytera Mobilfunk GmbH.

11.1 Safety measures and prerequisites

The following security measures and prerequisites must be observed for all activities:

- The safety regulations must be considered at all times, refer to *Chapter 2 “Safety regulations” on page 17*.
- Observe all other activity-based security measures and prerequisites in the work steps in this chapter.
- The required tools and materials must be available, refer to *Table “Tools, aids and materials (system restore)” on page 100*.
- Keep all the materials, such as mounting screws, in a safe place. You will need them again.
- Cables removed must be correctly reconnected on fitting the components. Mark the cables accordingly to ensure that they are connected properly.

11.2 Tools, Aids and Materials

The following table provides an overview of the required tools, aids and materials for the system restore.

Table 41: Tools, aids and materials (system restore)

Work step	Tools, Aids and Materials
System restore of a unit	■ configured service computer ■ SD card reader ■ Image tool, e.g. "Rawrite32" ■ Platform image of the DIB-R5 outdoor: DOB_PTI_xx.yy.zz.img.gz xx.yy.zz corresponds to the version number
The listed images and the image tool are located on the PV-DVD in the "images/ DIB-R5" directory	

11.3 System restore of a unit

The software of a unit is installed on an SD card which must be uninstalled and reinstalled in case of a system restore on site.

11.3.1 Removing the SD card

The following table provides an overview of the work steps for removing the SD card from the connection board (slider unit).

Table 42: Overview of the work steps to be performed

Work steps	Described in
✎ *Switching off the DIB-R5 outdoor*	✎ *Chapter 8.1 “Switching off the DIB-R5 outdoor” on page 91*
✎ *Removing the connection board*	✎ *Chapter 7.3.4.1 “Removing the connection board” on page 80*

Removing the SD card

Preparation:

- The DIB-R5 outdoor must be switched off.
- The connection board must have been removed.

→ Slightly push on the SD card with a finger until the locking mechanism audibly clicks.

⇨ The SD card is being ejected.

➔ The task is finished.

11.3.2 Updating the SD card

To restore a unit, the platform image of the unit must be written to the SD card with the help of the service computer and a SD card reader.

An image tool such as "Rawrite32" is used for this purpose. It is included on the PV-DVD or can be downloaded from the following URL: *http://www.netbsd.org/~martin/rawrite32/*.

Use of other image tools

It is also possible to use other image tools for updating the SD card. In this case, the operation may deviate from the description below.

Updating the SD card

Preparation:

- The SD card must have been removed.
- Administrator rights must have been granted.
- The tools, aids and materials specified must be available, refer to *Table "Tools, aids and materials (system restore)" on page 100*.

1. Insert the SD card in the SD card reader.
2. Start the "Rawrite32" image tool.
   ⇨ The user interface of "Rawrite32" will be displayed.
3. Select the SD card under *Destination:* .
   ⇨ The size of the SD card should be displayed as 3.85 GB.
4. Click on *Open...* and select the platform image.
   ⇨ After opening, checksums that can be analyzed in the case of write errors are automatically being calculated.
5. Click on *Write...* .
   ⇨ A confirmation dialog appears.
6. Confirm the confirmation dialog.
   ⇨ The write process is being started and lasts a few minutes.
7. Remove the SD card from the SD card reader.

➔ The task is finished.

11.3.3 Installing the SD card

The following table provides an overview of the work steps for installing the SD card to the connection board (slider unit).

Table 43: Overview of the work steps to be performed

Work steps	Described in
Sliding the connection board into the housing	*Chapter 7.3.4.6 “Sliding the connection board into the housing” on page 84*
Switching on the DIB-R5 outdoor	*Chapter 7.7 “Switching on the DIB-R5 outdoor” on page 88*

Installing the SD card

Preparation:

- The DIB-R5 outdoor must be switched off.
- The connection board must have been removed.

1. Insert the SD card into the card slot, refer to *Table “Legend: Connection board IFB9 (slider unit) (top view)” on page 40*.
2. Slightly push on the SD card with a finger until the locking mechanism audibly clicks.

   ⇨ The SD card is locked.

➔ The task is finished.

11.4 Performing a download via the Network Element Manager

After the system restore or importing the platform image, the components are reset to the factory setting. The Network Element Manager transmits the required data from the download repository to the network elements via an initial download.

Performing a download

Preparation:

- The service computer must be connected.
- A web browser must be available.
- A valid user account must be available.

1. Enter the corresponding IP address of the Base Station Management Console (BSMC) into the address field of the web browser and press *[Enter]*.

   ⇨ The *Login* page will be displayed.
2. Log in with a valid user account.

   ⇨ The BSMC overview page will be displayed.
3. Click on *Configuration* in the menu on the left side.

   ⇨ The *Settings* window opens.

4. Enter the corresponding IP address in the *Subnet* field and click on the *Apply* button.

   ⇨ The configuration will be changed. This may take a few minutes.

   Afterwards *Configuration has be changed successfully!* will be displayed.

Navigating to the *Download* menu

For expanding the *Service* entries, click on the ▸ icon.

5. Navigate to *"Service ➔ Download"* in the menu.

   ⇨ The *Software update* window opens.

6. Enter the following values in the corresponding fields and click on the *Download* button.

   - *Network ID*
   - *Network element ID*
   - *Download repository*

     Typically the IP address of the service computer. As the download repository is typically stored on the service computer, the download repository host is the service computer itself.

   ⇨ The process starts.

7. When the software download is finished, the new software version has to be activated with the *Activate* button.

   After the activation, the downloaded software versions are taken into operation. The download target is then restarted and operation may not be possible.

8. Login at the Network Element Manager and confirm the software download with the *Confirm* button, refer to the *Network Element Manager User Manual* for more information.

➔ The task is finished.

Performing a download via the Network Element Manager

12 Function tests and operational monitoring

After all the tasks have been performed on the product that have effects on the product and/or its components, the proper operation of all the integrated network and hardware components should be tested. We recommend logging the results of the test.

In addition, it is recommended to perform the tasks described in the following sections in regular intervals during the operation.

The following table provides an overview of work steps for testing the function and for operational monitoring.

Beside the required work steps the overview provides the information, in which case the work steps must be performed.

Table 44: Overview of work steps (function tests and operational monitoring)

Work steps	Installation	Configuration	Operation	Service	Described in
Connecting the service computer	---	✓	✓	✓	*Chapter 6.2.2.1 “Connecting the service computer” on page 69*
Checking the status of the DIB-R5 outdoor	✓	✓	✓	✓	*Chapter 12.2 “Checking the status of the DIB-R5 outdoor” on page 107*
Displaying states using the Network Element Manager	---	✓	✓	✓	*Chapter 12.3 “Displaying states using the Network Element Manager” on page 107*
Checking the availability	---	✓	✓	✓	*Chapter 12.4 “Checking the availability” on page 108*
Checking voice channels	---	✓	---	✓	*Chapter 12.5 “Checking voice channels” on page 109*
Checking standby carriers – optional	---	✓	---	✓	*Chapter 12.6 “Checking standby carriers – optional” on page 111*
Checking the installation site of the GNSS antenna	✓	---	---	✓	*Chapter 12.7.1 “Checking the installation site of the GNSS antenna” on page 111*

Work steps	Installation	Configuration	Operation	Service	Described in
GNSS operational monitoring	---	✓	✓	✓	*Chapter 12.7.2 “GNSS operational monitoring” on page 112*
Function tests and GNSS fault analysis	---	---	---	✓	*Chapter 12.7.3 “Function tests and GNSS fault analysis” on page 113*

12.1 Work equipment for function tests

The following table provides an overview of the work equipment for function tests and operational monitoring.

Table 45: Overview of work equipment (function tests and operational monitoring)

Work step	Work equipment
Connect the service computer	■ Configured ACCESSNET-T IP service computer ■ Straight through Ethernet cable ■ For base station configurations with multiple units only: – Additional two Ethernet cables – Switch with at least five ports
Check the operating states using the NEM Network Element Manager	■ service computer ■ straight through ethernet cable ■ NEM Network Element Manager
Check voice channels	■ service computer ■ min. two terminals ■ NEM Network Element Manager
Check the availability of network elements	■ configured NMC or service computer ■ straight through ethernet cable
Check standby carriers	NEM Network Element Manager
Function tests and GNSS operational monitoring	■ service computer ■ NEM Network Element Manager ■ GNSS antenna(s) ■ GNSS antenna cable ■ Multimeter

12.2 Checking the status of the DIB-R5 outdoor

12.2.1 Connection board IFB6

As the DIB-R5 outdoor has no indication of the power status on the housing, the switch for connection to the IP transport network can be used to check the power status of the product.

Checking the power status of the DIB-R5 outdoor

Preparation:

- Wiring of each unit has to be completed.
- The power source of the respective unit must be switched on.

→ Check for an active network connection of each unit at the respective ports of the switch.

⇨ If the unit has started up, the switch on site has to indicate an active network connection on the respective port.

➔ The task is finished..

12.2.2 Connection board IFB9

The operating states of the DIB-R5 outdoor can be checked via LEDs, refer to Figure 12.

12.3 Displaying states using the Network Element Manager

States of the installed hardware components and of services and features of a network element are displayed in the *Overview* area. You will gain a quick overview about the network element's state and are able to identify faults easily.

Table 46: Sub-areas in the Overview area

Sub-area	BS	XGN	Description
License	✓	---	State of a base station's license file
Transceiver	✓	—	State of the installed transceiver(s)
Controller	✓	—	State of the installed controller(s)

Sub-area	BS	XGN	Description
Services and *Alarm classes*	✓	✓	The following states are being displayed: ■ Services of a base station: – *Voice* – *SDS* – *Packet data* – *Encryption* – *Redundancy* ■ Services of an XGN: – *Redundancy* – *Switching* – *Application gateway* – *SIP gateway* – *Packet Data gateway* ■ States for alarm classes of a network element. A detailed fault analysis is possible here.
Alarms	✓	✓	If a fault is detected, a detailed analysis can be performed. For each involved hardware component or service the fault with timestamp and possible *Cause*, *Effect* and *To do* are displayed. This information can be used for solving the problem. To access the detailed fault analysis, click on the *Alarm details* icon of the corresponding entry.

12.4 Checking the availability

After network elements have been connected with an existing switch or router at the site, it must be checked whether the respective network element can be reached via the IP address. The Network Element Manager is used to check whether the IP address can be reached. If this should not be possible, the **ping** command should be used to check whether it can be reached.

The availabilty is checked via the IP address of the DIB-R5 outdoor unit.

In addition, the connection from the DIB-R5 outdoor to the download repository should be checked. The availability of the download repository can be checked with the **ping** command to the alias "ndbcon".

IP addresses of installed components

The configured IP addresses can be displayed via the Network Element Manager in the *IP Addresses* tab and are also documented in the project-specific documentation.

Checking the availability

Preparation:

- The NMC or service computer must have been connected with the transport network.
- You must be logged in at the Network Element Manager.

1. Check the state of the connections in the *Overview* tab of the Network Element Manager.

Optional work step

The work steps described below are required only if the Network Element Manager cannot check whether the network element can be reached or if no connection exists.

2. Change to the *IP address* tab and record the required IP address.
3. Perform a ping command to check the availability of the network element:

   ping <xxx>

   <xxx> corresponds to the required IP address.

   ⇨ The following output is displayed (example):

```
C:\Users\User>ping <xxx>
Ping is executed for <xxx> with 32 bytes of data:
Response from <xxx>: Bytes=32 Time<1 ms TTL=63
Response from <xxx>: Bytes=32 Time<1 ms TTL=63
Response from <xxx>: Bytes=32 Time<1 ms TTL=63
Ping statistic for <xxx>:
Packets: Sent = 4, Received = 4, Lost = 0 (0% loss),
time information in milliseconds: Minimum = 0 ms, maximum
= 0 ms, average = 0 ms
```

➔ The task is finished.

12.5 Checking voice channels

To be able to check the voice channels, a voice connection must be established between two terminals. Voice communication is always set up on the first free voice channel of the base station. To be able to check all the carriers on site, the voice channels of the carrier already checked must be disabled after a check to be able to use the next carrier for the voice communication.

The voice channels are locked with the help of the Network Element Manager (NEM). With the *System lock* maintenance function, the carriers are excluded from operation. The system lock must always be locked starting with the last carrier, for a base station with, e.g. two carriers, the second carrier must always be locked first.

Checking voice channels

Preparation:

- The working equipment must be available, refer to *Chapter 12.1 “Work equipment for function tests” on page 106*.
- The DIB-R5 outdoor must be switched on.
- The service computer must be connected, refer to *Chapter 6.2.2.1 “Connecting the service computer” on page 69*.
- You must be logged in at the Network Element Manager (NEM).

Manufacturer-dependent query

Terminals typically provide a function with which it can be queried in which cell (also referred to as location area) the terminal is registered. The query is performed via a manufacturer-dependent shortcut. Read the corresponding manufacturer documentation for this purpose.

1. Use the corresponding function to ensure that the terminal is registered in the cell of the base station.
2. Establish voice communication using the two terminals.
3. Check whether both terminals can send and receive voice transmissions.
4. Terminate the voice communication.
5. Open the *Maintenance* tab in the *Service* area of the Network Element Manager (NEM).
6. Click the *Blocking* button for the corresponding carrier(s).
   ⇨ The corresponding carriers are excluded from operational work and identified in the *Overview* view.
7. Re-establish voice communication using the two terminals.
8. Check whether both terminals can send and receive voice transmissions.
9. Terminate the voice communication.
10. Unblock blocked operational carriers by pressing the *Blocking* button.
    ⇨ The system blocking of operational carriers has been canceled.

No voice connection possible

The first carrier of a base station provides the Main Control Channel (MCCH) and must not be blocked, otherwise no control channel is available.

11. Proceed in a similar way for all additional carriers of the base station.

➔ The task is finished.

12.6 Checking standby carriers – optional

DIB-R5 outdoor optionally provides the redundancy option "Carrier redundancy" with which failed carriers can be replaced.

As a preventive maintenance task, it is recommended to check the function of the standby carriers at regular intervals, refer to *Chapter 9.2 "Periodical visual inspections" on page 95*. This is done via the Network Element Manager (NEM).

As a preventive maintenance task, it is recommended to check the function of the standby carriers at regular intervals. This occurs via the Network Element Manager (NEM).

Checking standby carriers

Preparation:

- The respective DIB-R5 outdoor must be in operation.
- The NEM Network Element Manager must be started.

1. Open the *Maintenance* tab in the *Service* area of the Network Element Manager (NEM).
2. Click the *Blocking* button for the corresponding carrier(s).
   ⇨ The corresponding carriers are excluded from operational work and identified in the *Overview* view.

   Existing standby carriers are enabled.
3. Check to see if the standby carriers are active and do not report alarm in the Network Element Manager (NEM) in the *Overview* area.
4. Wait at least 5 minutes before you unlock the operational carrier using the *Blocking* button.
   ⇨ The system blocking of operational carriers has been canceled.

   Standby carriers are switched back to their original status.

➔ The task is finished.

12.7 Checking GNSS

The following chapters describe procedures for function tests and the operational monitoring concerning the GNSS functionality of the DIB-R5 outdoor.

12.7.1 Checking the installation site of the GNSS antenna

To prevent damage, e.g. caused by insufficient guarding and/or fastening, the installation site of the GNSS antenna should be checked following the installation of the GNSS antenna.

Checking the installation site of the GNSS antenna

Preparation:

- The installation and connection of the GNSS antenna must have been completed.

1. Check the installation site of the GNSS antenna for proper condition, such as the
   - fastening of the antenna mast,
   - fastening of the GNSS antenna,
   - cable routing.

Circumferential range of vision (angle of unobstructed visibility of the sky) of the GNSS antenna.

A good circumferential range of vision (angle of unobstructed visibility of the sky according to the recommendations of the manufacturer) must be maintained to ensure proper reception of the GNSS antenna. The angle of the GNSS antenna supplied is 90°. When using a third-party GNSS antenna, heed the corresponding documentation supplied with the GPS antenna.

2. Check the circumferential range of vision of the GNSS antenna.

➔ The task is finished.

12.7.2 GNSS operational monitoring

The function of the GNSS receiver and the detectable GNSS satellites are monitored by the DIB-R5 outdoor based on the GNSS data received.

The Network Element Manager is a server application for managing network elements in an ACCESSNET-T IP TETRA radio network. The Network Element Manager provides a web-based user interface which is easily accessible with a common web browser.

The tool is running on the network element itself and can be accessed directly on site without connection to the IP transport network or from a control room. State-of-the-art WebSocket technology ensures that status changes are displayed instantly on the user interface without the need of any user interaction.

The procedures for this purpose are described in corresponding documents, refer to the following table.

Table 47: Required product documents

Product	Document type
Network Element Manager	User Manual

Alarm objects provide alarms/statuses for properties of hardware and software components. In addition, alarm objects contain information that aids in the context of fault management in the evaluation, localization and removal of errors.

Alarm objects always have an alarm status, alarm status changes are notified via events and visualized in the Network Element Manager.

Table 48: GNSS module – Possible messages

No.	Alarm object	Meaning
1	*GNSS antenna status*	Status of the GNSS antenna connection
2	*Communication | Time and clock module*	Status of the communication with the time and clock module

12.7.3 Function tests and GNSS fault analysis

The following table describes the possible causes and required measures relative to the corresponding messages, refer to *Table "GNSS module – Possible messages" on page 113*.

Recommendation

To check the proper operation of the GNSS module, the interfacing of a replacement GNSS antenna is recommended. Not all damages can be detected through visual inspections, such as a damage of the GNSS antenna. For this reason, you should take the measures described in *Table "GNSS module – fault analysis" on page 114* before replacing components.

Table 49: GNSS module – fault analysis

No.	Possible cause(s)	Required measure(s)
1	■ Fault at the GNSS antenna connection caused by: – Damaged GNSS antenna – Damaged GNSS antenna cable ■ Overvoltage at the GNSS antenna connection, e.g. due to lightning strike	Perform the following measures: ■ Check the following properties: – Damage of the GNSS antenna and the GNSS connecting cable – Length of the GNSS connecting cable – Power supply at the GNSS antenna (with multimeter) ■ Check whether messages are still being visualized. ■ For further analyses, contact your responsible service partner on site as necessary or contact Hytera Mobilfunk GmbH directly.
2	GNSS module defective	Perform the following measures: ■ Check whether other messages are visualized in addition to message 2, refer to *Table "GNSS module – Possible messages" on page 113*. In this case, first perform the required measures for these messages. ■ Check whether messages are still being visualized. ■ For further analyses, contact your responsible service partner on site as necessary or contact Hytera Mobilfunk GmbH directly.

12.8 VSWR and reflected power sensors

The DIB-R5 outdoor base station is equipped with two internal power sensors detecting the forward and reflected power. These sensors protect the power amplifier of the unit and reduce power if reflection is high.

It is not recommended to rely on these sensors for antenna VSWR measurements. The accuracy of the VSWR reading will decrease, if no matched load is connected to the output.

13 Troubleshooting

Troubleshooting via the network management system (NMS)

The Network Element Manager can be used to detect faults within the ACCESSNET-T IP.

The troubleshooting via the Network Element Manager should be performed prior to the troubleshooting on site (e.g. at sites of network elements). It can provide information whether a site must actually be visited.

The following table lists possible problems, causes and troubleshooting measures.

Fault description	Cause	Remedy
Base station cannot be reached/ switched on	Power supply at site not operational	■ Check fuse ■ Check distribution box or mains socket ■ Check power supply cable ■ Check if the wires of the power supply cable are not inverted (reverse voltage protection)
	Cable connection defective	■ Check internal wiring ■ Check cables
	Ethernet connection defective	Check availability with ping
	Software license dongle not (properly) installed on connection board	■ Check status via Network Element Manager ■ Check position of the software license dongle
	SD card	Check if the SD card is plugged in correctly
Connection to transport network defective (stand-alone or fall-back operation)	Cable connection defective	■ Check operating state via LEDs on switch/router ■ Check Ethernet cable
	Switch/router defective	Check operating state via LEDs on switch/ router
	Different software component versions	Checking and updating software component versions as required
Call setup/registration not possible	Transmitting/receiving antenna defective	Check antenna
	Cable connection defective	Check wiring of antenna(s) incl. antenna cable
	Carrier disabled	Check the status of the carrier in the Network Element Manager

Fault description	Cause	Remedy
Call setup/registration not possible	Carrier incorrectly configured	Check the configuration in the Network Element Manager
	Carrier defective	Check the status of the carrier in the Network Element Manager and replace it if necessary
	No subscriber data available on the base station	Check the status in the Network Element Manager and, where appropriate, Subscriber Manager
	License for use not available	Check the status in the Network Element Manager
	Subscriber unknown	Check subscriber configuration in the Subscriber Manager
	No authorization for call services	Check subscriber configuration in the Subscriber Manager
	Terminal incorrectly configured	Check configuration of terminal
	Terminal defective	Check terminal
No GNSS signal	GNSS antenna defective	Check antenna
	No unobstructed visibility of the sky	Check the installation site of the GNSS antenna
	Cable connection defective	Check antenna cable and plug connections
Second unit not operational	DIP switch of second unit not set correctly	Check if the switch is set to "Slave" for the second unit

14 Index

A

AGW (Application Gateway) 46
ARP (Address Resolution Protocol) 69
ARP buffer 69
Authentication 48
Availability 47, 48

B

BSF (Base Station Function) 46

C

Cable length 62
Cable requirements
  Cable lengths 61
  General 61
Cable specifications
  Data and RF cables 63
  Power supply cable 62
Carrier redundancy 48, 111
Carrying the 52
Centralized switching architecture 48
Checking
  Availability 109
  GNSS 112, 113
  GNSS antenna installation site 111
  Power status 107
  Standby carriers 111
  Voice channels 109
Commissioning 71
Component replacement 97
Configuration 67
Connecting
  External inputs 82
  Network connections 83, 84
  Power supply 81, 82
  Service computer 69
Connecting the service computer 69
Connection board
  Sliding in 84, 85
  Wiring 80
Contamination 55
Controller redundancy 48, 69

D

DIB-R5
  Switching off 91
DIP switch 81
Disconnect connections 92
Displaying states
  Alarms 107
  Controller 107
  License 107
  Services 107
  Transceiver 107
Downloads
  Initial download 68
  License data download 68

E

Environmental conditions 54, 55
  Temperature range 54

F

Fallback operation 47, 48
Fixed connection 92
Function blocks
  AGW (Application Gateway) 46
  BSF (Base Station Function) 46
  PGW (Packet Data Gateway) 47
  SCF (Switching Controller Function) 46, 47
  TGW (Telephony Gateway) 47
  TVF (TETRA Vocoder Function) 46
Function tests 105
  Checking GNSS 112, 113
  Checking standby carriers 111

Checking the availability 108
Checking the installation site of the GNSS antenna 111
Checking voice channels 109
Work equipment 106
Fuse protection
VDC power supply 65

G

GNSS antenna 57, 86, 111
GNSS type 1 surge protection device 60
Grounding 58, 79
Grounding connector 65

H

Heat sink 53

I

Initial download 68, 69
Installing mounting bracket 74
IP transport network 65
IP/VoIP 65
Isolated operating mode
Fallback operation 48

L

License data download 68
Lock 74

M

MAC address 69
Maintenance 95
Maintenance tasks 95
Visual inspections 95
MCCH (Main Control Channel) 46, 48
Mounting bracket 74
Installing to a mast 76
Installing to a wall 74
Mounting DIB-R5 outdoor to mounting bracket . . 78
Mounting options 53

N

Network Element Manager 112, 115

O

Operation room 54
Access (physical) 54
Access width 54
Opening heights 54
Overvoltage
Surge protection 58
Transient 59

P

PGW (Packet Data Gateway) 47
Power consumption 63
Power source
Disconnect from 92
Power supply 81, 82
Power supply connector 63
VDC power supply 64
Voltage fluctuations 64
Power supply cable 62
Cable specifications 62
Cross section 62
Number 62
Power supply connector 63
Protective conductor 58
PTP (Precision Time Protocol) 65

R

Recommissioning 92
Redundancy
Carrier 48, 111
Controller 48, 69
MCCH (Main Control Channel) 48
Redundancy concept 47
Removing DIB-R5 outdoor from mounting bracket 78
RTP (Real-Time Transport Protocol) 47

S

Safety measures 51
SCCH (Secondary Control Channel) 46, 48
SCF (Switching Controller Function) 46
SD card 100
Sealing insert 61, 85
Sealing plug 61, 85
Service computer 69
Service interruption 91, 92
Service IP address 69
SFP (Small Form-factor Pluggable) 43
SIP (Session Initiation Protocol) 47
Solar radiation 54, 55
Split cable gland 85
Standby 48
Standby carriers 111
Storage 52
Subscriber data 48
Supply lines 60
Support information 15
Surge arrester 56, 87
Surge protection 58
    GPS lightning surge protector 60
    Supply lines 60
    VDC power supply 59
Switch interlock 91
Switching architecture
    Centralized 48
Switching Controller Function 46
Switching off
    DIB-R5 91
Switching on 88
System restore 99
    Unit 100

T

Temperature range 54
TGW (Telephony Gateway) 47
Tools, Aids and Materials
    System restore 100
Transient overvoltage 59
Transporting 51
Troubleshooting 115
TVF (TETRA Vocoder Function) 46

U

UPS (uninterruptible power supply) 64

V

VDC power supply 64
Voice encoding
    G.711 47

W

Wiring 44
    Connection board 80
    One unit 44
    Two units 45