FCC- TEST REPORT

Report Number	:	**709502228908-00A**	Date of Issue:	April 24, 2022
Model	:	CM-05		
Product Type	:	Tubular motor		
Applicant	:	Coulisse B.V.		
Address	:	Vonderweg 48, 7468 DC Enter, THE NETHERLANDS		
Production Facility	:	Ningbo Dooya Mechanical & Electronic Technology Co., Ltd.		
Address	:	No.168 Shengguang Road, Luotuo, Zhenhai 315202 Ningbo, Zhejiang province, People's republic of China		
Test Result	:	■ **Positive** ☐ **Negative**		
Total pages including Appendices	:	21		

TÜV SÜD Certification and Testing (China) Co., Ltd. Shanghai Branch is a subcontractor to TÜV SÜD Product Service GmbH according to the principles outlined in ISO 17025.

TÜV SÜD Certification and Testing (China) Co., Ltd. Shanghai Branch reports apply only to the specific samples tested under stated test conditions. Construction of the actual test samples has been documented. It is the manufacturer's responsibility to assure that additional production units of this model are manufactured with identical electrical and mechanical components. The manufacturer/importer is responsible to the Competent Authorities in Europe for any modifications made to the production units which result in non-compliance to the relevant regulations. TÜV SÜD Certification and Testing (China) Co., Ltd. Shanghai Branch shall have no liability for any deductions, inferences or generalizations drawn by the client or others from TÜV SÜD Certification and Testing (China) Co., Ltd. Shanghai Branch issued reports.

This report is the confidential property of the client. As a mutual protection to our clients, the public and ourselves, extracts from the test report shall not be reproduced except in full without our written approval.

1 Table of Contents

1 Table of Contents 2
2 Details about the Test Laboratory 3
3 Description of the Equipment Under Test 4
4 Summary of Test Standards 6
5 Summary of Test Results 7
6 General Remarks 8
7 Systems test configuration 9
8 Test Setups 10
9 Test Methodology 11
9.1 Conducted Emission 11
9.2 Radiated Emission 14
9.3 Bandwidth Measurement 18
9.4 Deactivation Time 19
10 Test Equipment List 20
11 System Measurement Uncertainty 21

TÜV SÜD Certification and Testing (China) Co., Ltd. Shanghai Branch
3-13, No.151, Heng Tong Road, Shanghai, 200070, P.R. China
Phone: +86 21 61410123, Fax:+86 21 61408600

2 Details about the Test Laboratory

Details about the Test Laboratory

Test Site 1

Company name:	TÜV SÜD Certification and Testing (China) Co., Ltd. Shanghai Branch No.16 Lane, 1951 Du Hui Road, Shanghai 201108, P.R. China
Test Firm FCC Registration Number:	820234
Designation Number	CN1183
IC Company Number	25988
CAB identifier	CN0101
Telephone: Fax:	+86 21 6141 0123 +86 21 6140 8600

3 Description of the Equipment Under Test

Description of the Equipment Under Test

Product: Tubular motor

Model no.: CM-05

FCC ID: ZY4CM05B

IC: N/A

Rating: 5VDC

RF Transmission Frequency: 433.92MHz
2402~2480 MHz(BLE)

Modulation: For 433.92MHz: FSK
For 2.4GHz BLE: GFSK

Antenna Type: For 433.92MHz: line antenna
For 2.4GHz BLE: line antenna

Antenna Gain: For 433.92MHz: -4dBi
For 2.4GHz BLE: 0dBi

Channel list:

Bluetooth Low Energy							
Ch	Fre(MHz)	Ch	Fre(MHz)	Ch	Fre(MHz)	Ch	Fre(MHz)
0	2402	10	2422	20	2442	30	2462
1	2404	11	2424	21	2444	31	2464
2	2406	12	2426	22	2446	32	2466
3	2408	13	2428	23	2448	33	2468
4	2410	14	2430	24	2450	34	2470
5	2412	15	2432	25	2452	35	2472
6	2414	16	2434	26	2454	36	2474
7	2416	17	2436	27	2456	37	2476
8	2418	18	2438	28	2458	38	2478
9	2420	19	2440	29	2460	39	2480

Description of the EUT: The Equipment Under Test (EUT) is a Tubular motor which transmitted at 433.92MHz and support 2.4GHz BLE (support 1Mbps and 2Mbps data rate). we tested it and listed the worst data in this report.

TÜV SÜD Certification and Testing (China) Co., Ltd. Shanghai Branch
3-13, No.151, Heng Tong Road, Shanghai, 200070, P.R. China
Phone: +86 21 61410123, Fax:+86 21 61408600

Test sample no.: SHA-638108-1

The sample's mentioned in this report is/are submitted/ supplied/ manufactured by client. The laboratory therefore assumes no responsibility for accuracy of information on the brand name, model number, origin of manufacture, consignment, antenna gain or any information supplied.

TÜV SÜD Certification and Testing (China) Co., Ltd. Shanghai Branch
3-13, No.151, Heng Tong Road, Shanghai, 200070, P.R. China
Phone: +86 21 61410123, Fax:+86 21 61408600

4 Summary of Test Standards

Test Standards	
FCC Part 15 Subpart C:2020	PART 15 - RADIO FREQUENCY DEVICES Subpart C - Intentional Radiators

All the test methods were according to ANSI C63.10-2013.

TÜV SÜD Certification and Testing (China) Co., Ltd. Shanghai Branch
3-13, No.151, Heng Tong Road, Shanghai, 200070, P.R. China
Phone: +86 21 61410123, Fax:+86 21 61408600

5 Summary of Test Results

Technical Requirements				
FCC Part 15 Subpart C				
Test Condition		**Pages**	**Test Site**	**Test Result**
§15.207	**Conducted emission AC power port**	**11-13**	**Shielding room**	**Pass**
§15.205, §15.209, 15.35 (c)§15.231(b)	**Radiated Emission, 9kHz to 4.5GHz**	**14-17**	**3m chamber**	**Pass**
§15.231(c)	**Bandwidth Measurement**	**18**	**Shielding room**	**Pass**
§15.231(a)(1)	**Deactivation Time**	**19**	**Shielding room**	**Pass**
§15.203	**Antenna requirement**	**--**	**See Note 1**	**Pass**

Note 1: The EUT uses a line antenna, which gain is -4dBi for 433.92MHz and 0dBi for 2.4GHz BLE. In accordance to §15.203, It is considered sufficiently to comply with the provisions of this section.

6 General Remarks

Remarks

This submittal(s) (test report) is intended for FCC ID: ZY4CM05B
complies with Section 15.35, 15.203,15.205, 15.207, 15.209, 15.231 of the FCC Part 15, Subpart C Rules.

This report is only for the 433.92MHz test report, for the 2.4GHz BLE test report please refer to 709502228908-00B.

SUMMARY:

All tests according to the regulations cited on page 5 were

■ - Performed

☐ - **Not** Performed

The Equipment Under Test

■ - **Fulfills** the general approval requirements.

☐ - **Does not** fulfill the general approval requirements.

Sample Received Date:	March 1, 2022
Testing Start Date:	March 3, 2022
Testing End Date:	March 8, 2022

TÜV SÜD Certification and Testing (China) Co., Ltd. Shanghai Branch

Reviewed by:	Prepared by:	Tested by:
Hui TONG	Jiaxi XU	Yan YANG
EMC Section Manager	EMC Project Engineer	EMC Test Engineer

7 Systems test configuration

Auxiliary Equipment Used during Test:

DESCRIPTION	MANUFACTURER	MODEL NO.(SHIELD)	S/N(LENGTH)
Adapter	MLF	MLF-A260502000UU	--

TÜV SÜD Certification and Testing (China) Co., Ltd. Shanghai Branch
3-13, No.151, Heng Tong Road, Shanghai, 200070, P.R. China
Phone: +86 21 61410123, Fax:+86 21 61408600

8 Test Setups

8.1 AC Power Line Conducted Emission test setups

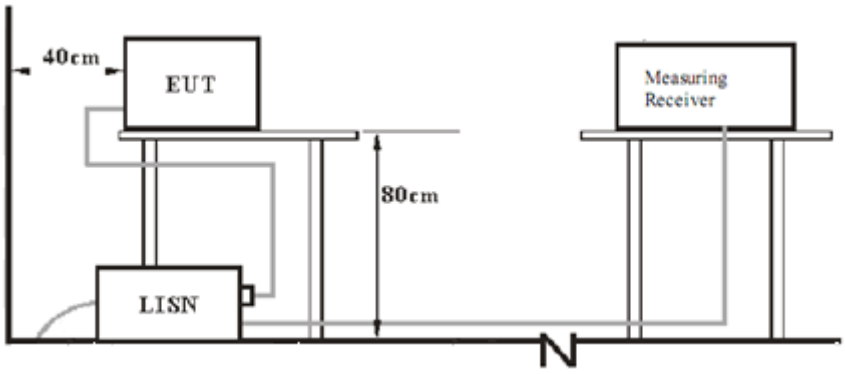

8.2 Radiated test setups

Below 1GHz

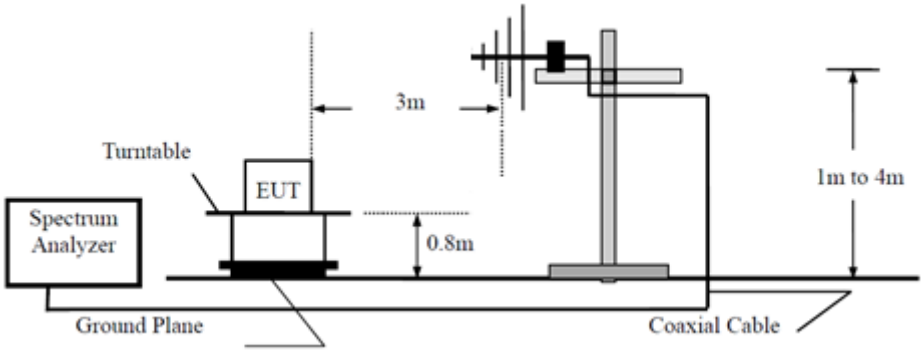

Above 1GHz

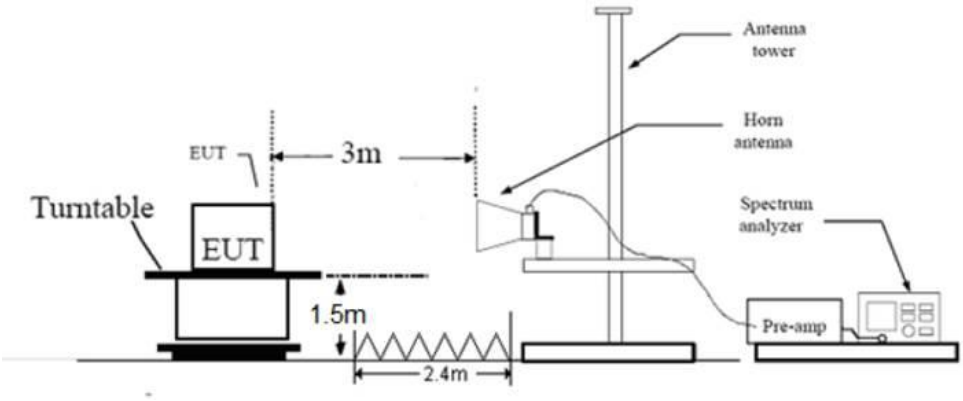

TÜV SÜD Certification and Testing (China) Co., Ltd. Shanghai Branch
3-13, No.151, Heng Tong Road, Shanghai, 200070, P.R. China
Phone: +86 21 61410123, Fax:+86 21 61408600

9 Test Methodology

9.1 Conducted Emission

Test Method

1. The EUT was placed on a table, which is 0.8m above ground plane
2. The power line of the EUT is connected to the AC mains through an Artificial Mains Network (A.M.N.).
3. Maximum procedure was performed to ensure EUT compliance
4. A EMI test receiver is used to test the emissions from both sides of AC line

Limit

Frequency MHz	QP Limit dBµV	AV Limit dBµV
0.150-0.500	66-56*	56-46*
0.500-5	56	46
5-30	60	50

Decreasing linearly with logarithm of the frequency

TÜV SÜD Certification and Testing (China) Co., Ltd. Shanghai Branch
3-13, No.151, Heng Tong Road, Shanghai, 200070, P.R. China
Phone: +86 21 61410123, Fax:+86 21 61408600

Conducted Emission

Product Type	:	Tubular motor
M/N	:	CM-05
Operating Condition	:	Mode: Tx_433.92MHz
Test Specification	:	L-line
Comment	:	AC 120V/60Hz

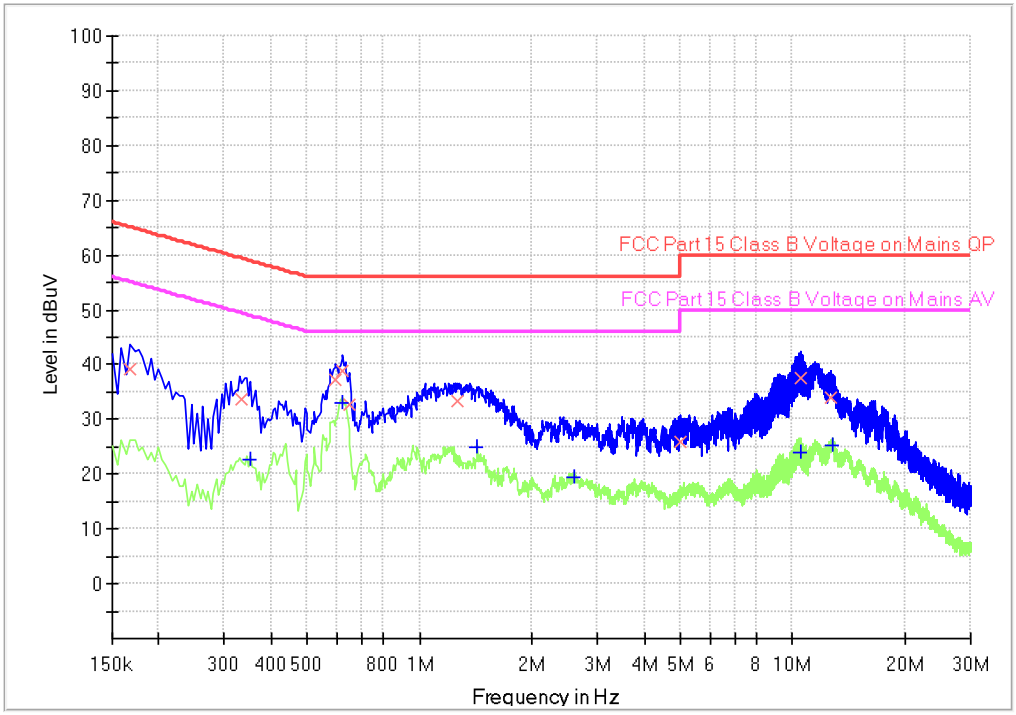

Frequency (MHz)	QuasiPeak (dBuV)	CAverage (dBuV)	Limit (dBuV)	Margin (dB)	Meas. Time (ms)	Bandwidth (kHz)	Line	Corr. (dB)
0.168000	39.12	---	65.06	25.94	1000.0	9.000	L1	19.5
0.334500	33.55	---	59.34	25.79	1000.0	9.000	L1	19.5
0.352500	---	22.59	48.90	26.31	1000.0	9.000	L1	19.5
0.591000	37.10	---	56.00	18.90	1000.0	9.000	L1	19.5
0.622500	---	33.06	46.00	12.94	1000.0	9.000	L1	19.5
0.622500	38.73	---	56.00	17.27	1000.0	9.000	L1	19.5
0.649500	32.83	---	56.00	23.17	1000.0	9.000	L1	19.5
1.261500	33.40	---	56.00	22.60	1000.0	9.000	L1	19.5
1.428000	---	25.06	46.00	20.94	1000.0	9.000	L1	19.5
2.607000	---	19.42	46.00	26.58	1000.0	9.000	L1	19.5
4.996500	26.07	---	56.00	29.93	1000.0	9.000	L1	19.6
10.468500	---	24.03	50.00	25.97	1000.0	9.000	L1	19.7
10.504500	37.64	---	60.00	22.36	1000.0	9.000	L1	19.7
12.691500	33.98	---	60.00	26.02	1000.0	9.000	L1	19.7
12.741000	---	25.25	50.00	24.75	1000.0	9.000	L1	19.7

Note 1: Measure Level (dBuV/m)= Reading Level (dBuV) + Factor (dB)
Factor (dB) =Cable Loss (dB) + LISN Factor (dB) + 10dB Attenuator

TÜV SÜD Certification and Testing (China) Co., Ltd. Shanghai Branch
3-13, No.151, Heng Tong Road, Shanghai, 200070, P.R. China
Phone: +86 21 61410123, Fax:+86 21 61408600

Conducted Emission

Product Type	:	Tubular motor
M/N	:	CM-05
Operating Condition	:	Mode: Tx_433.92MHz
Test Specification	:	N-line
Comment	:	AC 120V/60Hz

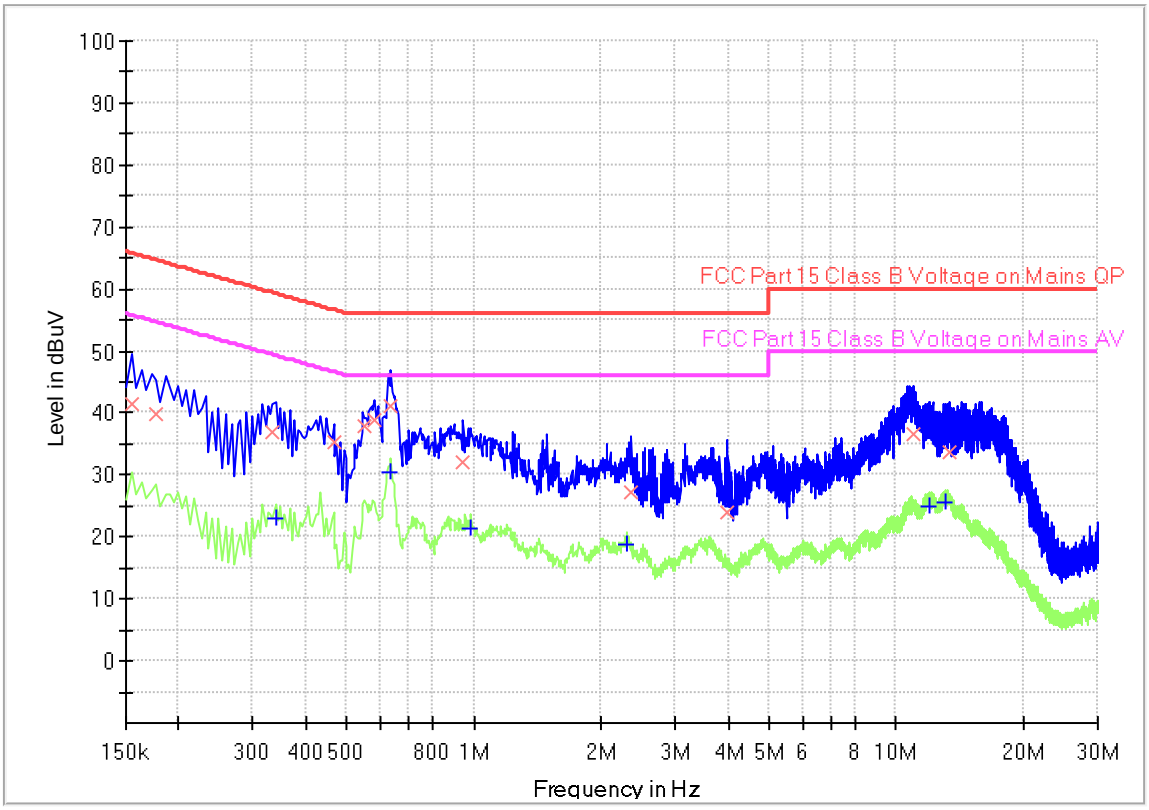

Frequency (MHz)	QuasiPeak (dBuV)	CAverage (dBuV)	Limit (dBuV)	Margin (dB)	Meas. Time (ms)	Bandwidth (kHz)	Line	Corr. (dB)
0.154500	41.39	---	65.75	24.36	1000.0	9.000	N	19.5
0.177000	39.71	---	64.63	24.92	1000.0	9.000	N	19.5
0.334500	37.01	---	59.34	22.33	1000.0	9.000	N	19.5
0.339000	---	22.95	49.23	26.28	1000.0	9.000	N	19.5
0.465000	35.31	---	56.60	21.29	1000.0	9.000	N	19.5
0.550500	37.86	---	56.00	18.14	1000.0	9.000	N	19.5
0.582000	38.98	---	56.00	17.02	1000.0	9.000	N	19.5
0.636000	---	30.28	46.00	15.72	1000.0	9.000	N	19.5
0.636000	41.19	---	56.00	14.81	1000.0	9.000	N	19.5
0.942000	32.05	---	56.00	23.95	1000.0	9.000	N	19.5
0.982500	---	21.53	46.00	24.47	1000.0	9.000	N	19.5
2.296500	---	18.82	46.00	27.18	1000.0	9.000	N	19.5
2.364000	27.11	---	56.00	28.89	1000.0	9.000	N	19.5
3.988500	23.97	---	56.00	32.03	1000.0	9.000	N	19.5
10.927500	36.62	---	60.00	23.38	1000.0	9.000	N	19.7
11.967000	---	25.01	50.00	24.99	1000.0	9.000	N	19.7
13.056000	---	25.74	50.00	24.26	1000.0	9.000	N	19.7
13.344000	33.54	---	60.00	26.46	1000.0	9.000	N	19.7

Note 1: Measure Level (dBuV/m)= Reading Level (dBuV) + Factor (dB)
Factor (dB) =Cable Loss (dB) + LISN Factor (dB) + 10dB Attenuator

TÜV SÜD Certification and Testing (China) Co., Ltd. Shanghai Branch
3-13, No.151, Heng Tong Road, Shanghai, 200070, P.R. China
Phone: +86 21 61410123, Fax:+86 21 61408600

9.2 Radiated Emission

Test Method

1. The EUT was place on a turn table which is 1.5m above ground plane for above 1GHz and 0.8m above ground for below 1GHz at 3 meters chamber room for test. The table was rotated 360 degrees to determine the position of the highest radiation.
2. Set to the maximum power setting and enable the EUT transmit continuously
3. The EUT was set 3 meters away from the interference – receiving antenna, which was mounted on the top of a variable – height antenna tower.
4. The height of antenna is varied from one meter to four meters above the ground to determine the maximum value of the field strength. Both horizontal and vertical polarizations of the antenna are set to make the measurement.
5. For each suspected emission, the EUT was arranged to its worst case and then the antenna was tuned to heights from 1 meter to 4 meters and the rotatable table was turned from 0 degrees to 360 degrees to find the maximum reading.
6. Use the following spectrum analyzer settings According to C63.10:
   (1) Span shall wide enough to fully capture the emission being measured;
   (2) Set RBW=100 kHz for f < 1 GHz; VBW RBW; Sweep = auto; Detector function = peak; Trace = max hold;
   (3) Set RBW = 1 MHz, VBW= 3MHz for f ≥1 GHz for peak measurement.
   For average measurement:
   VBW = 10 Hz, when duty cycle is no less than 98 percent.
   VBW ≥ 1/T, when duty cycle is less than 98 percent where T is the minimum transmission duration over which the transmitter is on and is transmitting at its maximum
   power control level for the tested mode of operation.
7. Repeat above procedures until all frequencies measured were complete.

Limit

According to §15.231 (b), the field strength of emissions from intentional radiators operated under this section shall not exceed the following:

Fundamental frequency (MHz)	Field Strength of Fundamental (Microvolts /meter)	Field Strength of spurious emissions ((Microvolts /meter)
40.66-40.70	2,250	225
70-130	1,250	125
130-174	1,250 to 3,750 *	125 to 375 *
174-260	3,750	375
260-470	3,750 to 12, 500*	375 to 1,250*
Above 470	12,500	1,250

TÜV SÜD Certification and Testing (China) Co., Ltd. Shanghai Branch
3-13, No.151, Heng Tong Road, Shanghai, 200070, P.R. China
Phone: +86 21 61410123, Fax:+86 21 61408600

Limits for 15.209 Radiated emission limits; general requirements

Frequency (MHz)	Field strength (microvolts/meter)	Measurement distance (meters)
0.009-0.490	2400/F(kHz)	300
0.490-1.705	24000/F(kHz)	30
1.705-30.0	30	30
30-88	100	3
88-216	150	3
216-960	200	3
Above 960	500	3

Frequency	Limit at 3m (dBuV/m)
0.009 MHz – 0.490 MHz	128.5 to 93.8[1]
0.490 MHz – 1.705 MHz	73.8 to 63[1]
1.705 MHz – 30 MHz	69.5[1]
30 MHz – 88 MHz	40.0[1]
88 MHz – 216 MHz	43.5[1]
216 MHz – 960 MHz	46.0[1]
Above 960 MHz	54.0[1]
Above 1000 MHz	54.0[2]
Above 1000 MHz	74.0[3]

[1]Limit is with detector with bandwidths as defined in CISPR-16-1-1 except for the frequency bands 9-90 kHz, 110-490 kHz and above 1000 MHz where an Average detector is used.
[2]Limit is with 1 MHz measurement bandwidth and using an Average detector
[3]Limit is with 1 MHz measurement bandwidth and using a Peak detector

TÜV SÜD Certification and Testing (China) Co., Ltd. Shanghai Branch
3-13, No.151, Heng Tong Road, Shanghai, 200070, P.R. China
Phone: +86 21 61410123, Fax:+86 21 61408600

Spurious radiated emissions for transmitter

According to C63.10, if the peak (or quasi-peak) measured value complies with the average limit, it is unnecessary to perform an average measurement, so AV emission value did not show in below table if the peak value complies with average limit.

Radiated Emission								
Value	Emissions Frequency	E-Field Polarity	Field Strength at 3m	Average Factor	Net Field Strength at 3m	Limit	Margin	Emission Type
	MHz		dBμV/m	dB	dBμV/m	dBμV/m	dB	
PK	433.91	H	83.55	/	83.55	100.80	17.25	Fundamental
AV	433.91	H	83.55	-22.80	60.75	80.80	20.05	Fundamental
PK	157.53	H	35.13	/	35.13	43.50	8.37	Spurious
PK	403.13	H	38.63	/	38.63	46.00	7.37	restricted band
PK	1301.67	H	37.53	/	37.53	74.00	36.47	restricted band
PK	1734.5	H	36.51	/	36.51	80.80	44.29	Spurious
PK	433.96	V	76.72	/	76.72	100.80	24.08	Fundamental
AV	433.96	V	76.72	-22.80	53.92	80.80	26.88	Fundamental
PK	142.92	V	33.33	/	33.33	43.50	10.17	Spurious
PK	400.07	V	36.27	/	36.27	46.00	9.73	restricted band
PK	1301.5	V	35.84	/	35.84	74.00	38.16	restricted band
PK	5201.3	V	50.06	/	50.06	80.80	30.74	Spurious

Remark:
1: AV Emission Level= PK Emission Level+20log(dutycycle)
2: Corrected Amplitude = Read level + Corrector factor
Above 1GHz: Corrector factor = Antenna Factor + Cable Loss- Amplifier Gain
Below 1GHz: Corrector factor = Antenna Factor + Cable Loss
3. Correct Factor = Antenna Factor + Cable Loss (+ Amplifier, for higher than 1GHz)
4. Corrected Reading = Original Receiver Reading + Correct Factor
5. Only the worst data listed in this report
6. Other frequency was 20dB below the limit
Duty Cycle = 7.246ms/100 (ms) =7.246%
Duty Cycle Factor =20log (Duty Cycle) =-22.80

TÜV SÜD Certification and Testing (China) Co., Ltd. Shanghai Branch
3-13, No.151, Heng Tong Road, Shanghai, 200070, P.R. China
Phone: +86 21 61410123, Fax:+86 21 61408600

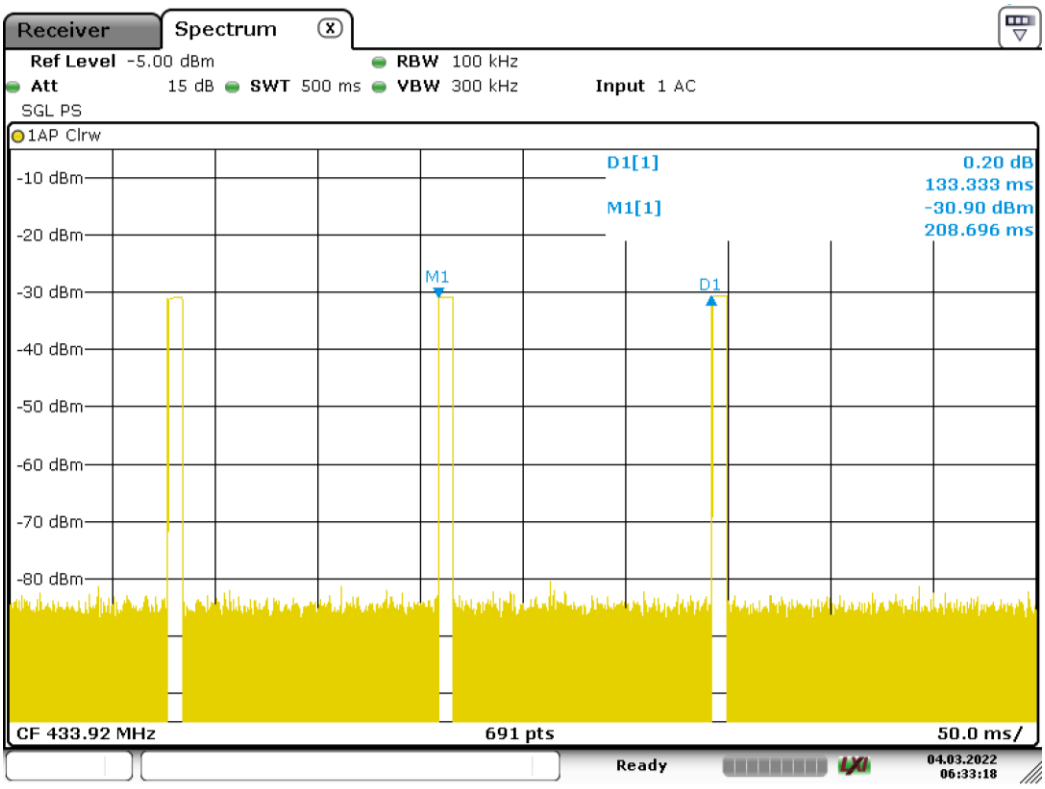

Date: 4.MAR.2022 06:33:18

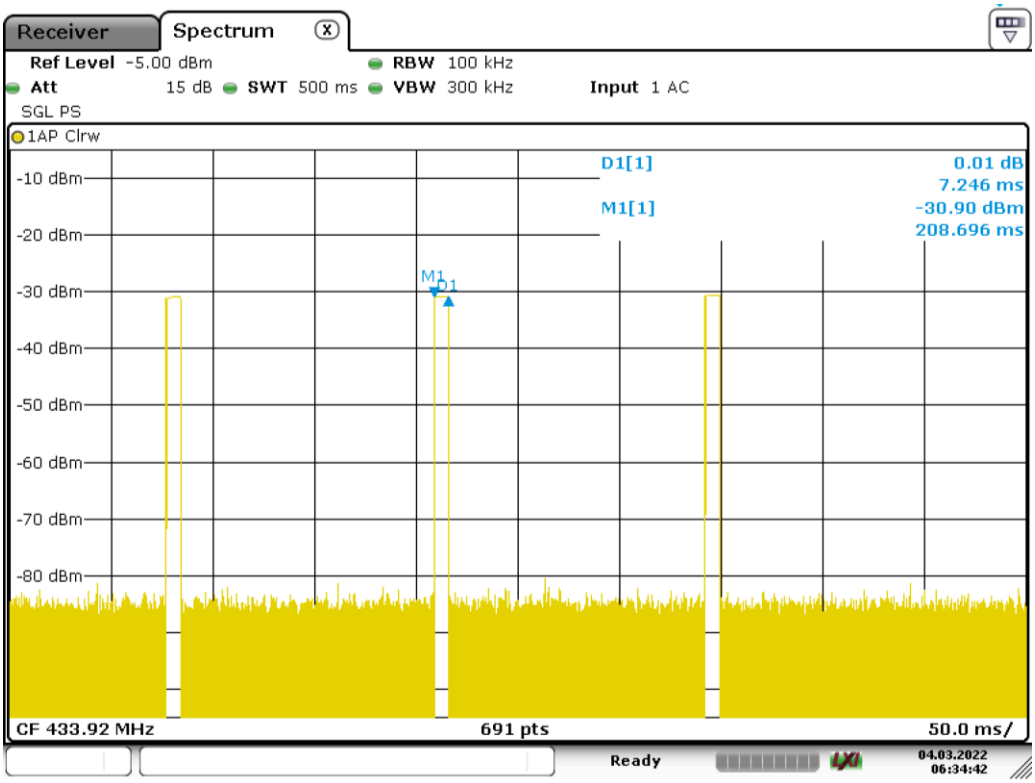

Date: 4.MAR.2022 06:34:42

TÜV SÜD Certification and Testing (China) Co., Ltd. Shanghai Branch
3-13, No.151, Heng Tong Road, Shanghai, 200070, P.R. China
Phone: +86 21 61410123, Fax:+86 21 61408600

9.3 Bandwidth Measurement

Test Method

1. The RF output of EUT was connected to the test receiver by RF cable. The path loss was compensated to the results for each measurement.
2. Set to the maximum power setting and enable the EUT transmit continuously.
3. Use the following test receiver settings:
   Span = approximately 5 times the 20dB bandwidth, centered on a hopping channel
   RBW =1% to 5% of the 20dB bandwidth of the emission being measured, VBW≥RBW,
   Sweep = auto, Detector function = peak, Trace = max hold
4. Allow the trace to stabilize. Use the marker-to-peak function to set the marker to the peak of the emission. Measure the frequency difference of two frequencies that were attenuated 20 dB from the reference level. Record the frequency difference as the emission bandwidth. Record the results.
5. Repeat above procedures until all frequencies measured were complete.

Limit

The bandwidth of the emission shall be no wider than 0.25% of the center frequency for devices operating above 70MHz and below 900MHz. For devices operating above 900MHz, the emission shall be no wider than 0.5% of the center frequency. Bandwidth is determined at the points 20dB down from the modulated carrier.
The limit for the EUT = 0.25% * 433.92 MHz = 1084 kHz

Test Result

Channel	20dB Bandwidth (KHz)	Limit (KHz)
1	81.13300	1084

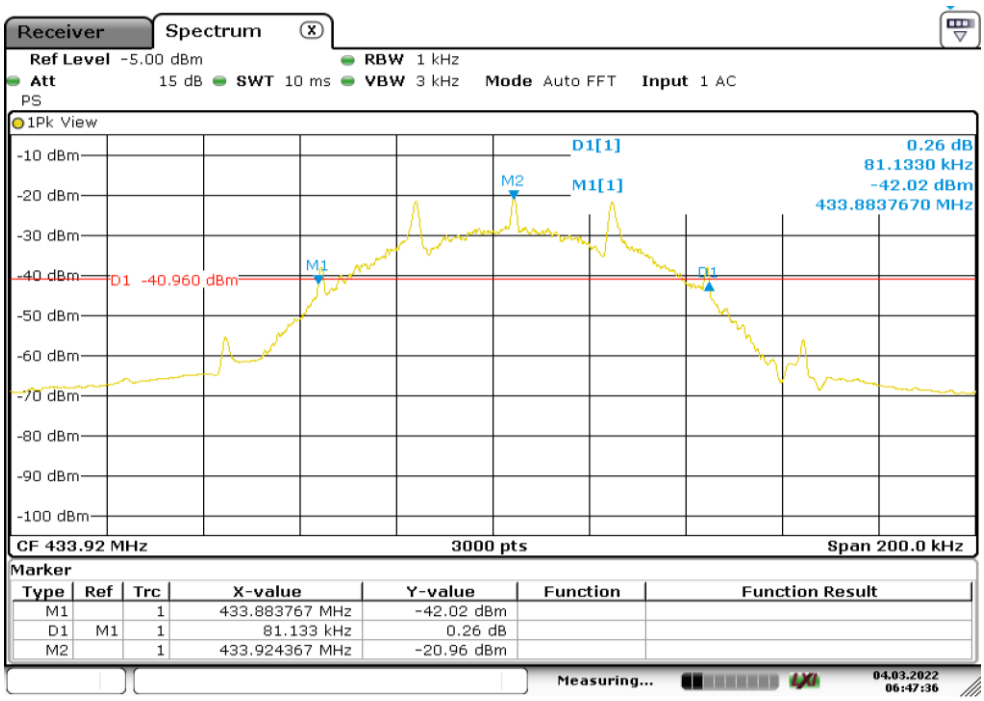

Date: 4.MAR.2022 06:47:36

TÜV SÜD Certification and Testing (China) Co., Ltd. Shanghai Branch
3-13, No.151, Heng Tong Road, Shanghai, 200070, P.R. China
Phone: +86 21 61410123, Fax:+86 21 61408600

9.4 Deactivation Time

Test Method

1. Set to the maximum power setting and enable the EUT in transmitting mode.
2. Set center frequency of spectrum analyzer=operating frequency.
3. Set the spectrum analyzer as RBW=120 KHz, VBW=1MHz, Span=0Hz.
4. Repeat above procedures until all frequency measured was complete.

Limit

According to FCC Part 15.231 (a), the transmitter shall be complied the following requirements:
(√) (1) A manually operated transmitter shall employ a switch that will automatically deactivate the transmitter within not more than 5 seconds of being released.
(2) A transmitter activated automatically shall cease transmission within 5 seconds after activation.
(3) Periodic transmissions at regular predetermined intervals are not permitted. However, polling or supervision transmissions, including data, to determine system integrity of transmitters used in security or safety applications are allowed if the total duration of transmissions does not exceed more than two seconds per hour for each transmitter. There is no limit on the number of individual transmissions, provided the total transmission time does not exceed two seconds per hour.

Test Result

Channel	Frequency	Deactivation Time	Result
1	433.92MHz	115.9ms	Pass

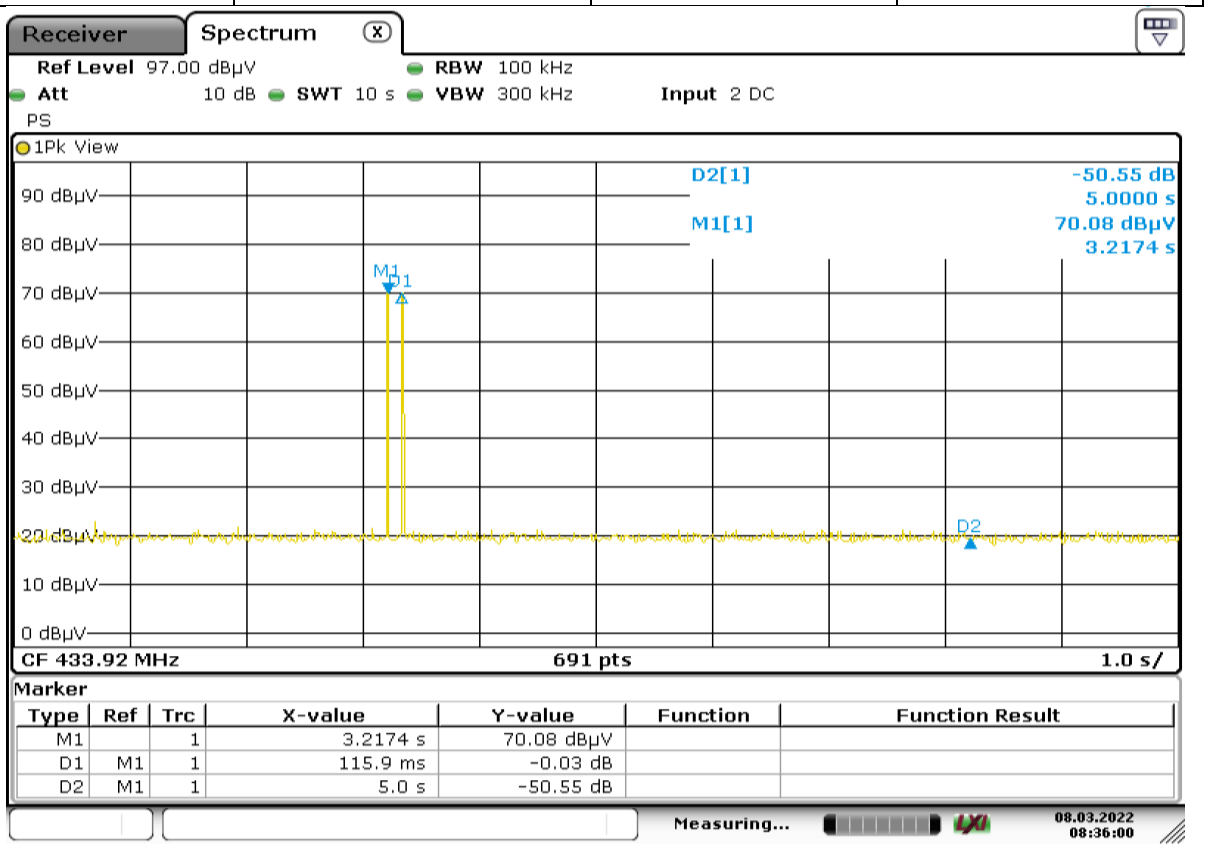

Date: 8.MAR.2022 08:35:59

TÜV SÜD Certification and Testing (China) Co., Ltd. Shanghai Branch
3-13, No.151, Heng Tong Road, Shanghai, 200070, P.R. China
Phone: +86 21 61410123, Fax:+86 21 61408600

10 Test Equipment List

List of Test Instruments

RF Test

Description	Manufacturer	Model no.	Equipment ID.	Calibration Date	Calibration Due
EMI test receiver	R&S	ESR3	S1503001-YQ-EMC	2021-8-02	2022-8-01

Conducted Emission

Description	Manufacturer	Model no.	Equipment ID.	Calibration Date	Calibration Due
EMI test receiver	R&S	ESR3	S1503001-YQ-EMC	2021-8-02	2022-8-01
2-Line V-network	R&S	ENV216	S1503103-YQ-EMC	2021-8-02	2022-8-01

Radiated Emission Test

USED	Equipment Name	Model	Manufacturer	Equipment ID.	Calibration Date	Calibration Due
☒	EMI test receiver	ESR3	R&S	S1503109-YQ-EMC	2021-8-02	2022-8-01
☒	Trilog super broadband test antenna	VULB9168	SCHWARZBECK	S1808296-YQ-EMC	2021-9-23	2024-9-22
☒	Double-ridged waveguide horn antenna	HF907	R&S	S1503009-YQ-EMC	2021-4-13	2024-4-12
☒	Signal conditioning unit	SCU-18D	R&S	S1503012-YQ-EMC	2021-8-02	2022-8-01
☒	Signal and spectrum analyzer	FSV40	R&S	S1503003-YQ-EMC	2021-8-02	2022-8-01
☒	Loop antenna	HFH2-Z2	R&S	S1503013-YQ-EMC	2021-5-21	2022-5-20

11 System Measurement Uncertainty

For a 95% confidence level, the measurement expanded uncertainties for defined systems, in accordance with the recommendations of ISO 17025 were:

Items	Extended Uncertainty
Radiated Disturbance	30MHz to 1GHz, ±5.03dB (Horizontal) ±5.11dB (Vertical) 1GHz to 18GHz, ±5.15dB (Horizontal) ±5.12dB (Vertical) 18GHz to 25GHz, ±4.76dB

Measurement Uncertainty Decision Rule:

Determination of conformity with the specification limits is based on the decision rule according to IEC Guide 115: 2007, clause 4.4.3 and 4.5.1.

TÜV SÜD Certification and Testing (China) Co., Ltd. Shanghai Branch
3-13, No.151, Heng Tong Road, Shanghai, 200070, P.R. China
Phone: +86 21 61410123, Fax:+86 21 61408600