SETUP GUIDE

ROLLER BLIND

MOTOR CMD-02-P

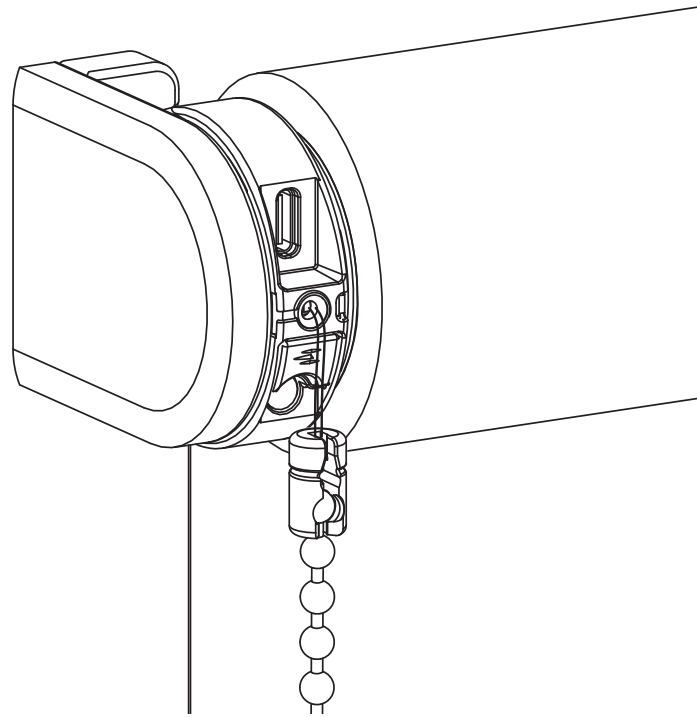

MOTIONBLINDS

⚠ WARNING

Read the instructions carefully before assembling and using the product. Assembly can be completed by non-professionals. For indoor use only.

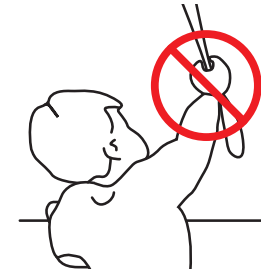

- Young children can strangle themselves with the loop of pull cords, chains and tapes, and cords that operate window coverings.
- To avoid strangulation and entanglement, keep cords out of reach of young children.
- Cords may ensnare a child's neck.
- Move beds, cots and furniture away from window covering cords.
- Do not tie cords together.
- Make sure cords do not twist together and form a loop.

Cleaning

Follow these general rules when cleaning the outside of the device and its components:

- Use a damp, soft, lint-free cloth. Avoid getting moisture in openings.
- Do not use aerosol sprays, solvents, alcohol, or abrasives.

Service & Support

Do not perform repairs yourself. Do not attempt to open the device or disassemble it. You run the risk of electric shock and voiding the limited warranty. No user-serviceable parts are inside.

Warranty Service

First follow the advice in this manual. If the product appears to be damaged or does not function properly, go to your local dealer for instructions on how to obtain warranty service.

Recycle

This marking indicates that this product should not be disposed with other household wastes throughout the EU. To prevent possible harm to the environment or human health from uncontrolled waste disposal, recycle it responsibly to promote the sustainable reuse of material resources. To return your used device, please use the return and collec-tion systems or contact the retailer where the product was purchased. They can take this product for environmental safe recycling.

IP 20

III

Important Safety instructions

WARNING: To reduce the risk of severe injury or death, it is important to follow these instructions for personal safety. Save these instructions.

- Read and follow all installation instructions.
- This appliance can be used by children aged 8 years and above and persons with reduced physical, sensory or mental capabilities or lack of experience and knowledge if they have been given supervision or instruction concerning use of the appliance in a safe way and understand the hazards involved. Children should not play with the appliance. Cleaning and user maintenance should not be performed by children without supervision.
- Do not allow children to play with fixed controls. Keep remote controls away from children.
- Frequently examine the installation for imbalance and signs of wear or damage to cables and springs. Do not use if repair or adjustment is necessary.
- This instruction manual is also available on the website.
- The drive must be disconnected from its power source during cleaning, maintenance and when replacing parts.
- The A-weighted emission sound pressure level of the drive is equal to or less than 70dB(A).
- Indoor and household use only.
- Disconnect the drive from the power supply or switch off the automatic controls when maintenance, such as window cleaning, is being carried out in the vicinity.
- When operating a biased switch, make sure that other persons are kept away.
- Do not operate when maintenance, such as window cleaning, is being carried out in the vicinity.
- The tube motor must only be supplied with safety extra low voltage corresponding to the marking on the appliance.
- The maximum operating temperature of motor is +45°C. The maximum charging temperature of battery pack is +45°C.
- This appliance contains batteries that are non-replaceable.

Important Installation instructions

WARNING: Important safety instructions. Follow all instructions, since incorrect installation can lead to severe injury.

- This motor can only be used with soft material for driven parts.
- Hazardous unprotected moving parts of the drive must be installed higher than 2.5m above the floor or any other level surface that could provide access to it.
- Install the actuating member of a manual release at a height less than 1.8m.
- The actuating member of a biased switch is to be located within direct sight of the driven part but away from moving parts. It is to be installed at a minimum height of 1.5m and not accessible to the public.
- The mass and the dimension of the driven part must be compatible with the rated torque and rated operating time.
- Fixed controls have to be clearly visible after installation.
- The driven part must be compatible with the rated torque CMD-02 0.3N.m and rated operating time (12 min).
- Minimum tube diameter: Ø25mm.
- The drive is intended to be installed at a height of at least 2.5m above the floor or any other accessible level surface.
- All-pole disconnection switches must be incorporated in the fixed wiring in accordance with the wiring rules.
- The appliance must only be supplied at safety extra low voltage corresponding to the marking on the appliance.
- Before installing the drive, remove any unnecessary cords or components and disable any equipment not needed for powered operation.

FCC Manual
FCC ID:ZY4CMD02P

Regulatory Information

1 FCC Information for User

This product does not contain any user serviceable components and is to be used with approved antennas only. Any product changes or modifications will invalidate all applicable regulatory certifications and approvals.

2 FCC Electronic Emission Notices

This device complies with part 15 of the FCC Rules. Operation is subject to the following two conditions:
1. This device may not cause harmful interference
2. This device must accept any interference received, including interference that may cause undesired operation.

3 FCC Radio Frequency Interference statement

This equipment has been tested and found to comply with the limits for a class B digital device, pursuant to Part 15 of the FCC Rules. These limits are designed to provide reasonable protection against harmful interference when the equipment is operated in a commercial environment.
This equipment generates, uses and can radiate radio frequency energy and, if not installed and used in accordance with the instructions, may cause harmful interference to radio communications.
Operation of this equipment in a residential area may cause harmful interference, in which case the user will be required to correct the interference at their own expense. If this equipment does cause harmful interference to radio or television reception, which can be determined by turning the equipment off and on, the user is encouraged to try to correct the interference by one or more of the following measures:

- Reorient or relocate the receiving antenna
- Increase the distance separating the equipment and receiver
- Connect the equipment to an outlet on a circuit different from that to which the receiver is connected
- Consult the dealer or an experienced radio/TV technician for help

This device complies with FCC radiation exposure limits set forth for an uncontrolled environment. This device should be installed and operated with a minimum distance of 20cm between the radiator and your body.

EU Declaration

Hereby, Coulisse declares that the radio equipment type CMD-02-P is in compliance with directive 2014/53/EU. The full text of the EU declaration of conformity is available at the following internet address: www.my.coulisse.com

- Frequency range: 433 MHz, RF power: <3 dBm

Buttons and functions

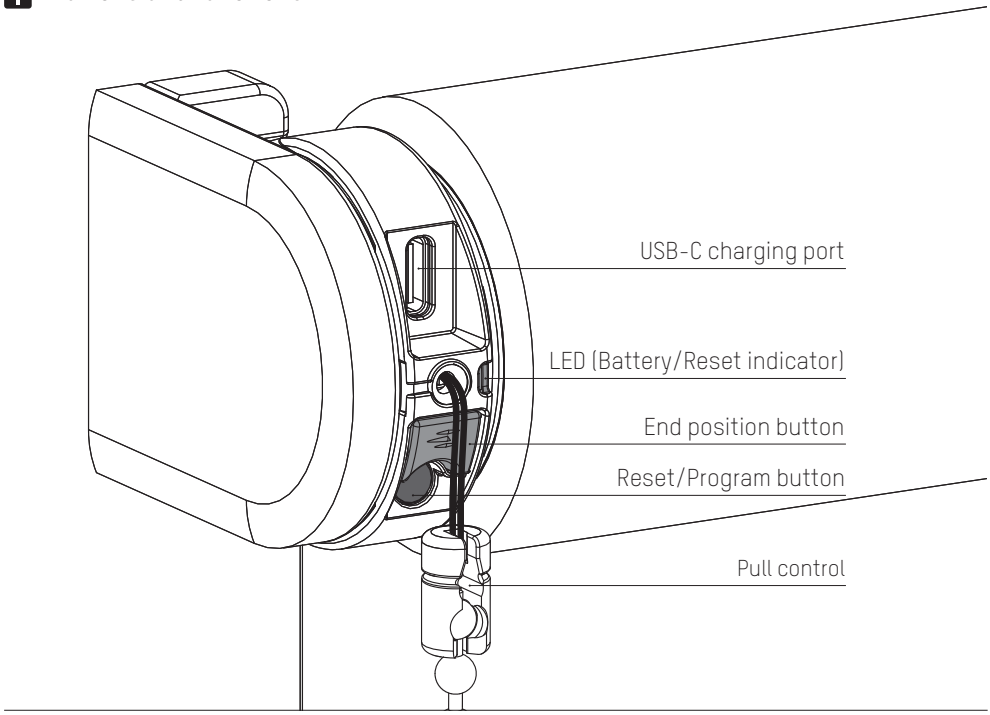

1 Install the blind

Follow the steps in the installation instructions to install the blind.

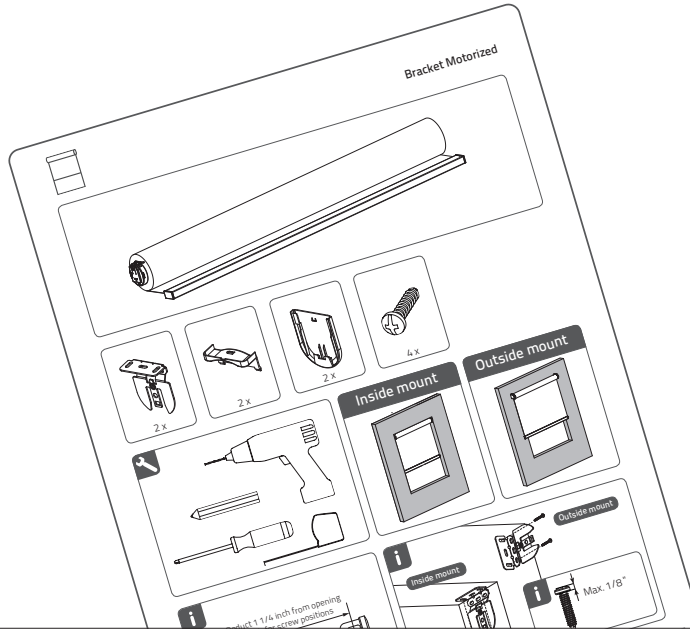

2 Activate the blind

To activate the blind, connect it to a standard USB-C 5V power supply via a USB-C cable.
This can be your iPhone's power adapter, for example.

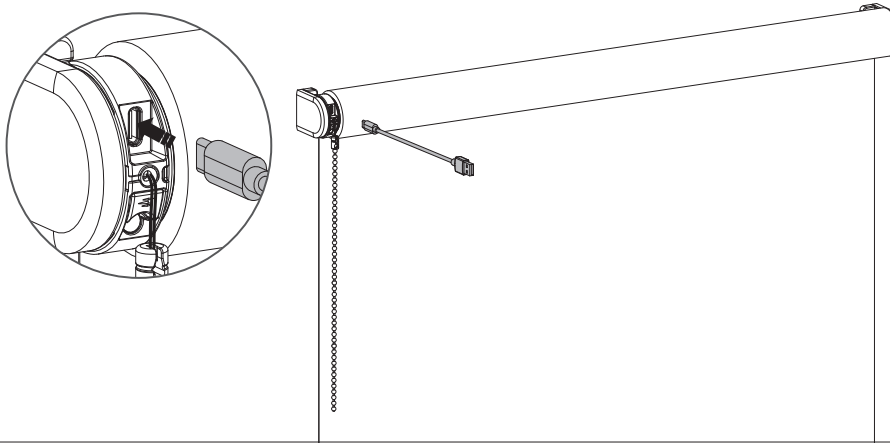

3 Set end positions

Pull and hold the chain until the blind has reached the bottom position.
If the blind moves in the opposite direction, release the chain and pull and hold again.

Adjust until the desired bottom position has been reached.

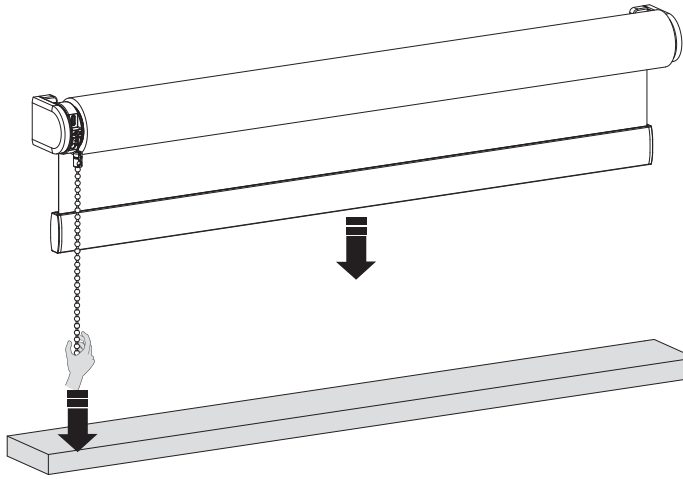

4 Save your bottom position

When your blind is positioned at your bottom position hold the button until the blind moves up and down to save your bottom position.

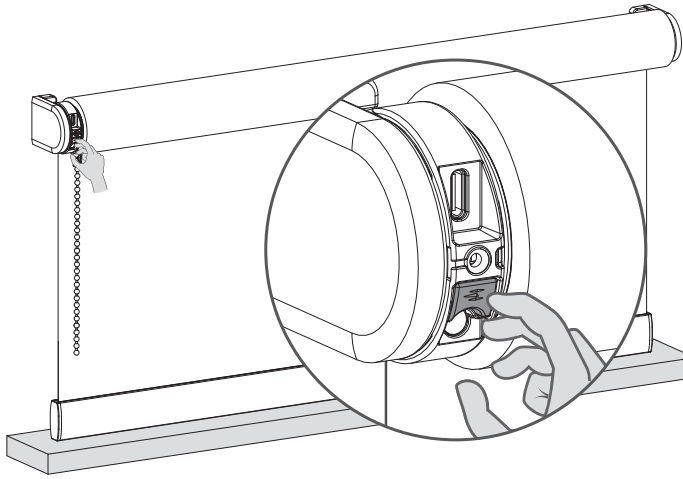

5 Move your blind to the top position

Pull and hold the chain until the blind has reached the top position.
If the blind moves in the opposite direction, release the chain and pull and hold again.

Adjust until the desired top position has been reached.

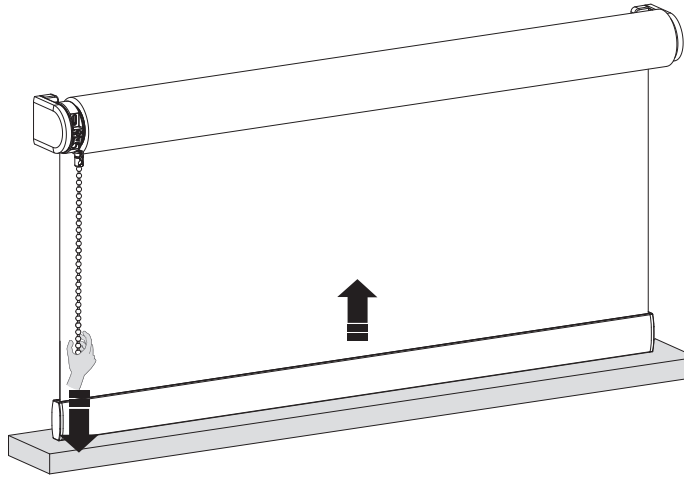

6 Save your top position

When your blind is positioned at your top position hold the button until the blind moves up and down to save your top position.

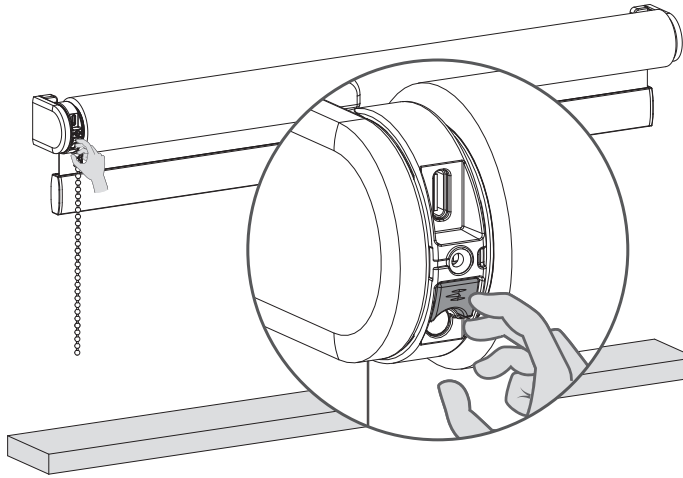

Pair a remote control

.1 Select a channel on the remote and press the program button on the motor to activate program mode. The blind will start stepping up and down.

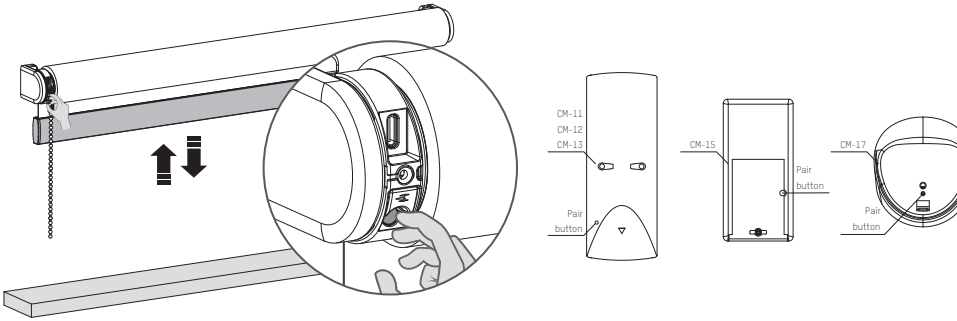

.2 Press the pair button on the back of the remote control to pair the blind with the selected channel.The blind will shortly stop stepping, indicating that the remote has been paired to the blind.

.3 Shortly press the program button to deactivate program mode. The blind stops stepping and can be operated.

ENGLISH

Pair with a bridge

With the MotionBlinds bridge you can unlock more options, such as voice assistants and the ability to control your blinds when you are not at home.

App Store
Download the
MotionBlinds
Wi-Fi app
rtube.nl/red981

Google Play
Download the
MotionBlinds
Wi-Fi app
rtube.nl/red982

6 Adjustments

Change direction of rotation :
If the position of the blind in the app is opposite to your blind, change the direction of rotation by pressing the End Position button twice within one second.

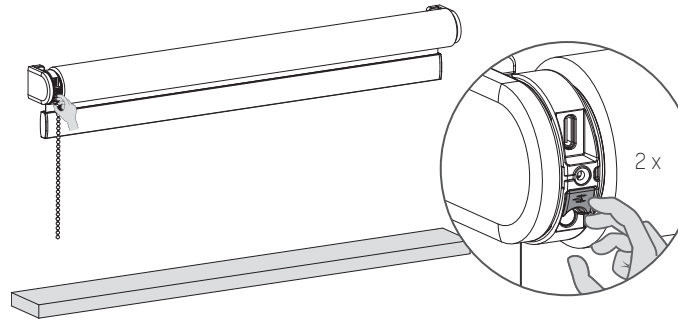

i Recharge the blind

To charge the blind, connect it to a standard USB-C 5V power supply via a USB-C cable.
This can be your iPhone's power adapter, for example.

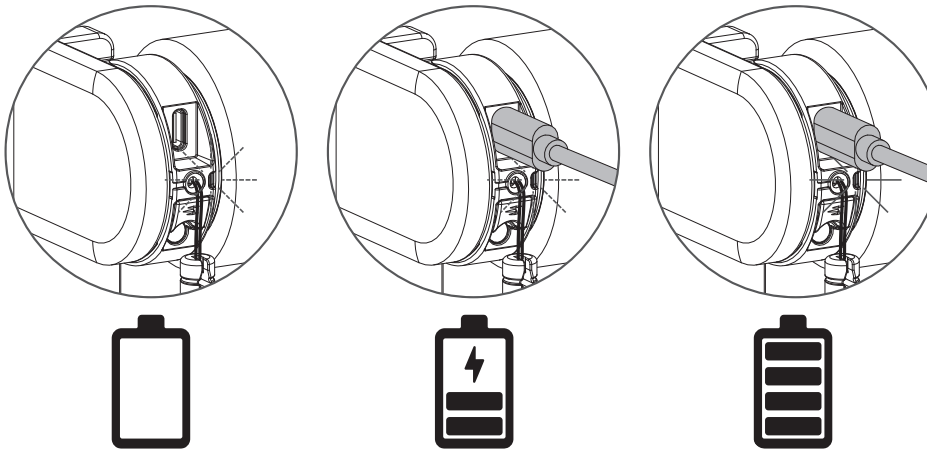

LED light flashes red during operation; Charge the battery	LED light flashes green; battery is charging	LED light constantly green; battery is fully charged

Reset the blind

Resetting the blind results in deleting the end positions and connections of the blind with apps and remote controls. Shortly press the program button to activate program mode. The blind will start stepping up and down.Hold the reset/program button for at least 20 seconds to reset the blind. The blind will stop stepping twice. After the second stop, the blind will give one extra step to indicate that is has been reset.

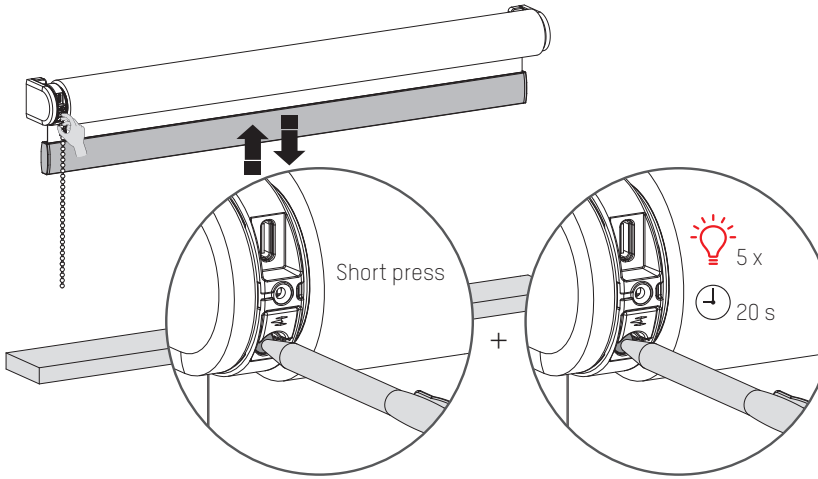

More information

Please scan the QR code below to view the complete user manual with more information and advanced options.

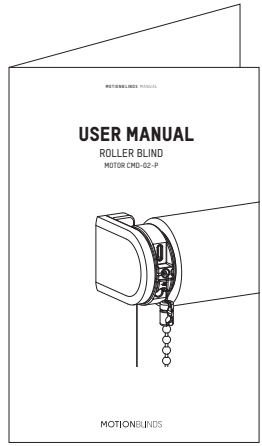

User Manual
rtube.nl/red1829