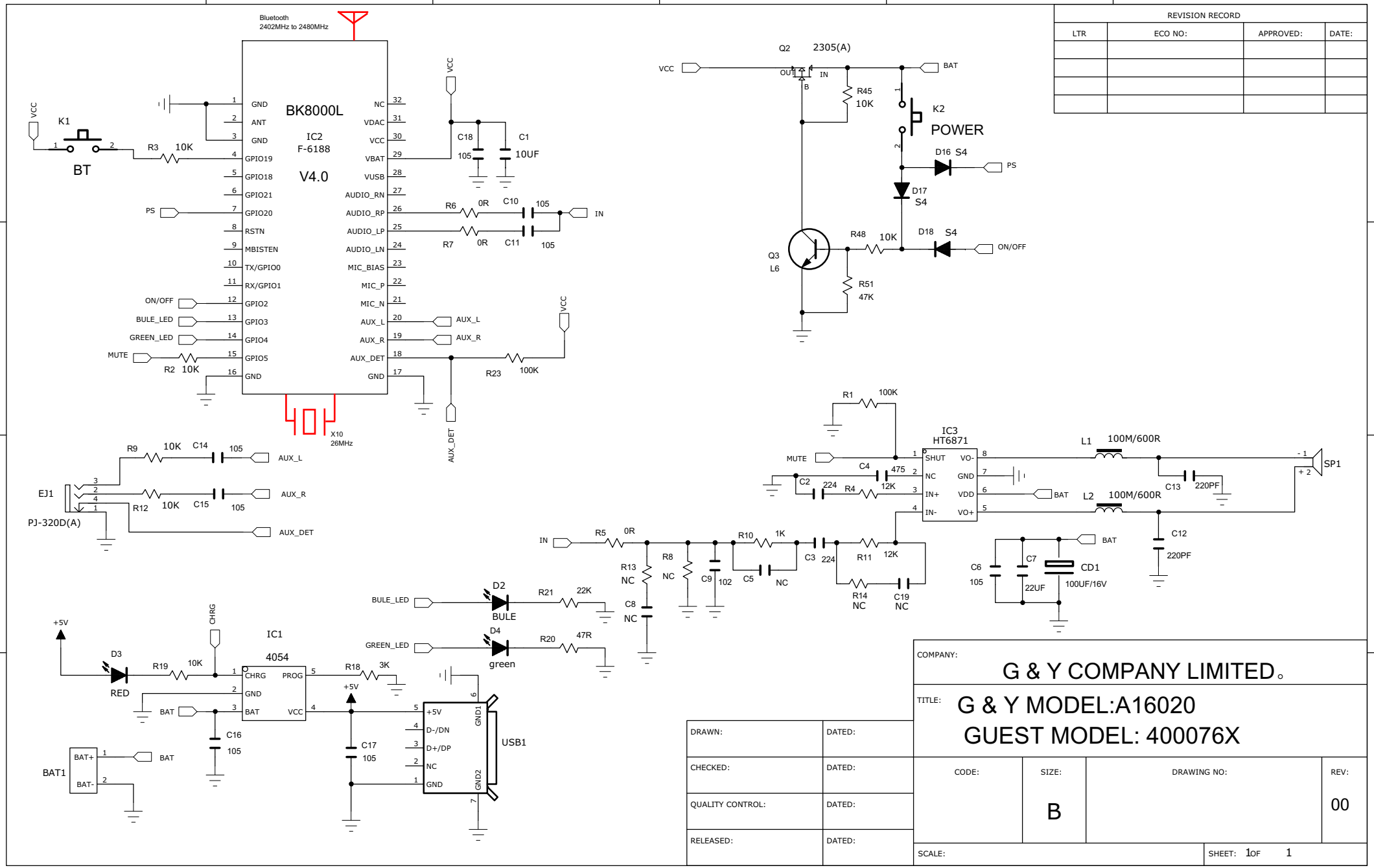

REVISION RECORD			
LTR	ECO NO:	APPROVED:	DATE:

DRAWN:	DATED:
CHECKED:	DATED:
QUALITY CONTROL:	DATED:
RELEASED:	DATED:

COMPANY: G & Y COMPANY LIMITED。

TITLE: G & Y MODEL:A16020
GUEST MODEL: 400076X

CODE:	SIZE:	DRAWING NO:	REV:
	B		00

SCALE:

SHEET: 1 OF 1

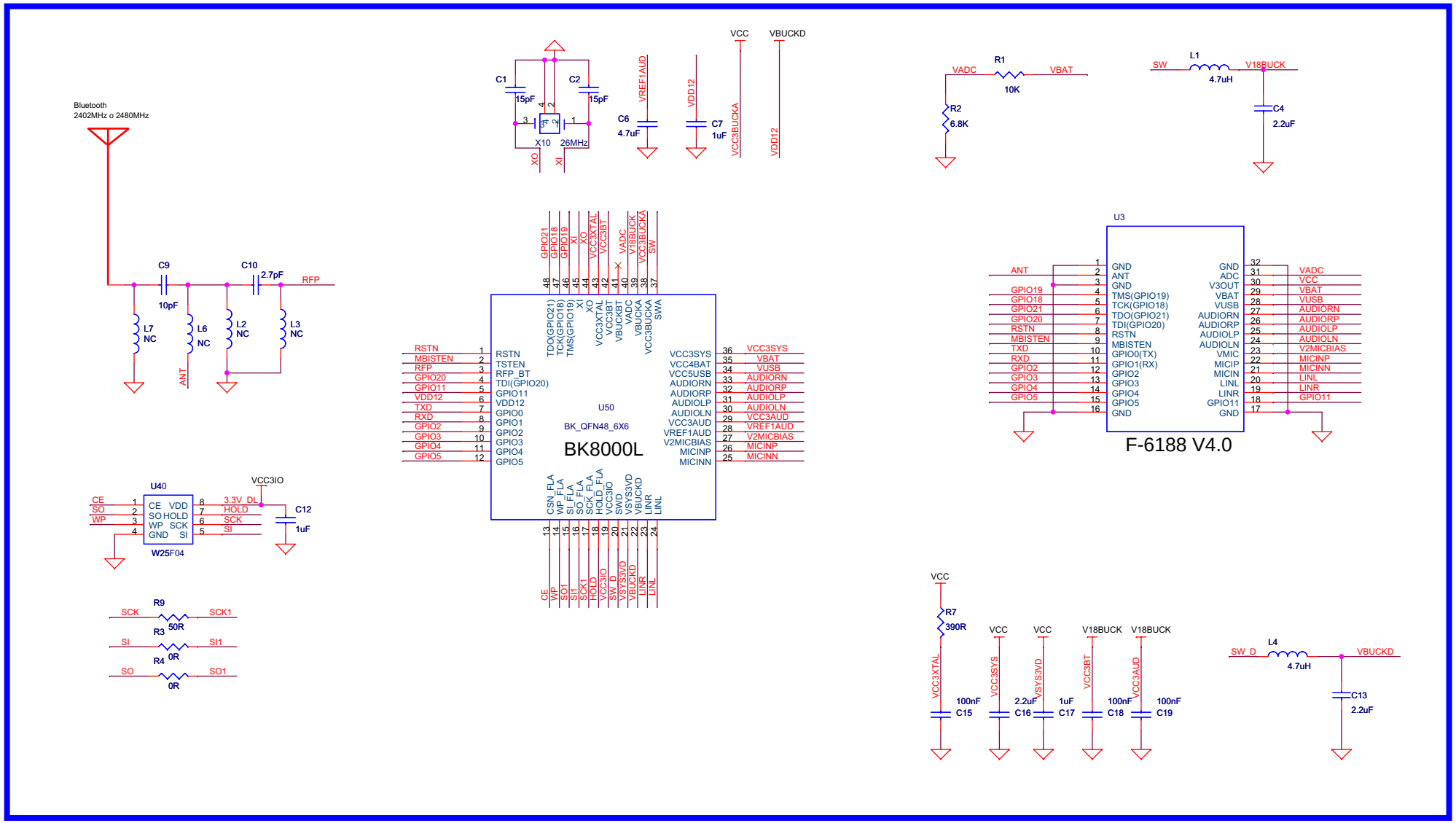
Bluetooth
2402MHz o 2480MHz
C9
10pF
C10
2.7pF
RFP
L7
NC
L6
NC
L2
NC
L3
NC
ANT
C1
15pF
C2
15pF
X10
26MHz
XO
XI
C6
4.7uF
VREF1AUD
VDD12
C7
1uF
VCC3BUCKA
VCC
VBUCKD
VDD12
R1
10K
VADC
VBAT
R2
6.8K
L1
4.7uH
SW
V18BUCK
C4
2.2uF
U50
BK_QFN48_6X6
BK8000L
RSTN
MBISTEN
RFP
GPIO20
GPIO11
VDD12
TXD
RXD
GPIO2
GPIO3
GPIO4
GPIO5
RSTN
TSTEN
RFP_BT
TDI(GPIO20)
GPIO11
VDD12
GPIO0
GPIO1
GPIO2
GPIO3
GPIO4
GPIO5
VCC3SYS
VCC4BAT
VCC5USB
AUDIORN
AUDIORP
AUDIOLP
AUDIOLN
VCC3AUD
VREF1AUD
V2MICBIAS
MICINP
MICINN
VCC3SYS
VBAT
VUSB
AUDIORN
AUDIORP
AUDIOLP
AUDIOLN
VCC3AUD
VREF1AUD
V2MICBIAS
MICINP
MICINN
U3
F-6188 V4.0
ANT
GPIO19
GPIO18
GPIO21
GPIO20
RSTN
MBISTEN
TXD
RXD
GPIO2
GPIO3
GPIO4
GPIO5
GND
ANT
GND
TMS(GPIO19)
TCK(GPIO18)
TDO(GPIO21)
TDI(GPIO20)
RSTN
MBISTEN
GPIO0(TX)
GPIO1(RX)
GPIO2
GPIO3
GPIO4
GPIO5
GND
GND
ADC
V3OUT
VBAT
VUSB
AUDIORN
AUDIORP
AUDIOLP
AUDIOLN
VMIC
MICIP
MICIN
LINL
LINR
GPIO11
GND
VADC
VCC
VBAT
VUSB
AUDIORN
AUDIORP
AUDIOLP
AUDIOLN
V2MICBIAS
MICINP
MICINN
LINL
LINR
GPIO11
U40
W25F04
CE
SO
WP
CE VDD
SO HOLD
WP SCK
GND SI
3.3V_DL
HOLD
SCK
SI
VCC3IO
C12
1uF
R9
50R
SCK
SCK1
R3
0R
SI
SI1
R4
0R
SO
SO1
VCC
R7
390R
VCC3XTAL
100nF
C15
VCC3SYS
2.2uF
C16
VSYS3VD
1uF
C17
VCC3BT
100nF
C18
VCC3AUD
100nF
C19
V18BUCK
L4
4.7uH
SW_D
VBUCKD
C13
2.2uF