Amcrest Alarm Hub

AL-HUB1

Quick Start

Guide

Package Contents

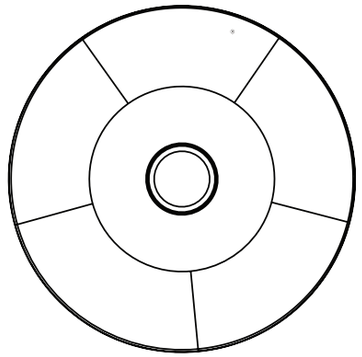

Amcrest Alarm Hub

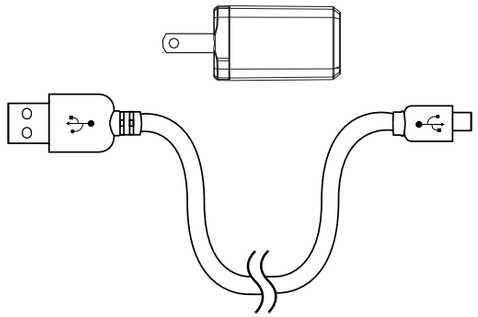

Power Accessories

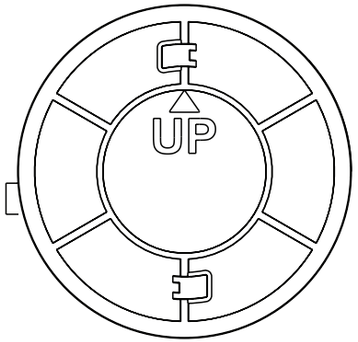

Bracket

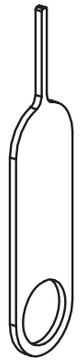

Pin

LED Behavior

See the table below for definitions of the hub's LED behavior:

Behavior	Meaning
(solid)	Disarmed mode tivated.
(flashing)	Ready for network connection.
(flashing rapidly)	Ready to pair. Press button.
(solid)	Rebooting.
(flashing)	Trying to connect to network.
(flashing rapidly)	Alarm has been triggered.
(alternating)	Firmware upgrade in progress.

Overview

Front view

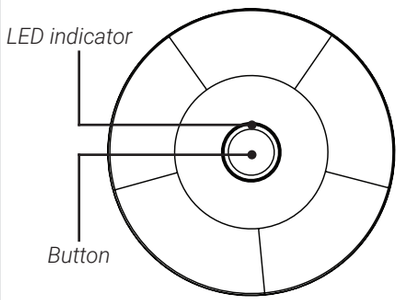

Back view

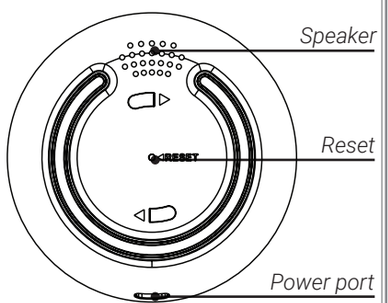

AY41TR_QSG_EN_R1

STEP 1: Connecting to the App

To pair your sensor hub to the app:

1. *If you already have the app, skip this step.* Scan the QR code and install the free app from the App Store or Google Play Store.
2. Tap the app icon to launch the app.
3. *If you already have an account, skip this step.* Tap **Sign up**, then follow the on screen prompts to create an account.

Record your account details below:

Email: _____

Account Password: _____

4. Connect the power cable to the included USB adapter and plug into a nearby outlet. Plug the other end of the power cable into the power port of your hub.
5. Once the status LED on your hub is flashing blue and the startup chime sounds, tap **+**.
6. Scan the QR code on the bottom of your hub using your mobile device's camera.

   NOTE: If your mobile device cannot scan the QR code, tap **Manually enter Device ID**.
7. Create a secure password for your hub. Record your hub's password below:

Hub Password: _____

The app will walk you through the rest of the setup process, step by step.

Home, Away, and Disarmed Mode

The sensor hub's settings will list all of the linked devices. Here, you can tap **+** to add a sensor or adjust the security mode.

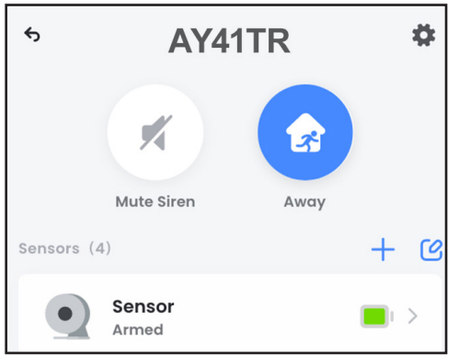

Tap the icon to choose between one of the three security modes:

Home Mode: Only perimeter sensors will be monitored.

Away Mode: All sensors will be monitored and an alert will be sent if they're triggered.

Disarmed Mode: No sensors in your home will be monitored and no alerts will be sent.

You have the option to specify which sensors will be armed or disarmed in the set mode.

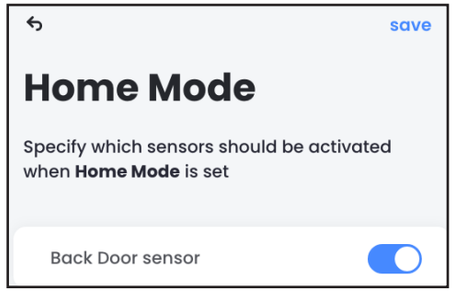

STEP 2: Installing the

Location tips:

- The hub can be installed indoors on any flat surface.
- The hub must always be connected to the power adapter.
- The optimal position for the hub is central to where the sensors are installed and within range of the WiFi router.

To install your sensor hub to a surface area:

1. Pick a central area for the hub sensor to be placed.

   NOTE: Install close to an outlet for the power adapter. Make sure the power cable is not strained.
2. Pair the sensors to ensure that the connection to the hub is steady based on their designated locations.
3. Twist the supplied bracket clockwise to the back of the hub. Be sure to follow the "UP" direction.
4. Peel the bracket's adhesive and stick the hub to the desired surface area.

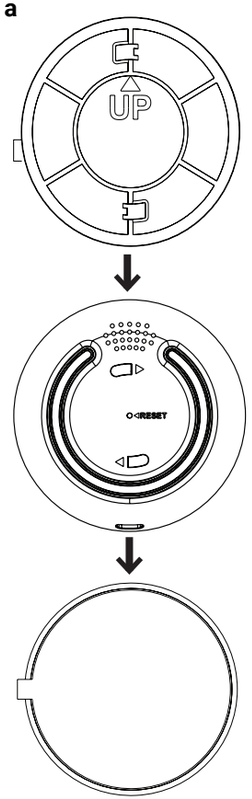

AMCREST

Regulatory Information

The regulatory information herein might vary according to the model you purchased. Some information is only applicable for the country or region where the product is sold.

FCC Information

CAUTION

Changes or modifications not expressly approved by the party responsible for compliance could void the user's authority to operate the equipment.

FCC Conditions:

This device complies with part 15 of the FCC Rules. Operation is subject to the following two conditions:

- This device may not cause harmful interference.
- This device must accept any interference received, including interference that may cause undesired operation.

FCC Compliance:

This equipment has been tested and found to comply with the limits for a digital device, pursuant to part 15 of the FCC Rules. This equipment generates, uses, and can radiate radio frequency energy and, if not installed and used in accordance with the instructions, may cause harmful interference to radio communication.

- For class B device, these limits are designed to provide reasonable protection against harmful interference in a residential installation. However, there is no guarantee that interference will not occur in a particular installation. If this equipment does cause harmful interference to radio or television reception, which can be determined by turning the equipment off and on, the user is encouraged to try to correct the interference by one or more of the following measures:
  - Reorient or relocate the receiving antenna.
  - Increase the separation between the equipment and receiver.
  - Connect the equipment into an outlet on a circuit different from that to which the receiver is connected.
  - Consult the dealer or an experienced radio/TV technician for help.

This equipment complies with FCC radiation exposure limits set forth for an uncontrolled environment. This equipment should be installed and operated with minimum distance 20cm between the radiator & your body.

www.amcrest.com/fcc

AMCREST

IC

This device complies with Industry Canada licence-exempt RSS standard(s).
Operation is subject to the following two conditions:

(1) This device may not cause interference, and
(2) This device must accept any interference, including interference that may cause undesired operation of the device.

Under Industry Canada regulations, this radio transmitter may only operate using an antenna of a type and maximum (or lesser) gain approved for the transmitter by Industry Canada. To reduce potential radio interference to other users, the antenna type and its gain should be so chosen that the equivalent isotropically radiated power (e.i.r.p.) is not more than that necessary for successful communication.

This equipment complies with IC RSS-102 radiation exposure limits set forth for an uncontrolled environment. This equipment should be installed and operated with minimum distance 20cm between the radiator & your body.

Le présent appareil est conforme aux CNR d'Industrie Canada applicables aux appareils radioexempts de licence. L'exploitation est autorisée aux deux conditions suivantes:

(1) L'appareil ne doit pas produire de brouillage, et
(2) L'utilisateur de l'appareil doit accepter tout brouillage radioélectrique subi, même si le brouillage est susceptible d'en compromettre le fonctionnement.

Conformément à la réglementation d'Industrie Canada, le présent émetteur radio peut fonctionner avec une antenne d'un type et d'un gain maximal (ou inférieur) approuvé pour l'émetteur par Industrie Canada. Dans le but de réduire les risques de brouillage radioélectrique à l'intention des autres utilisateurs, il faut choisir le type d'antenne et son gain de sorte que la puissance isotrope rayonnée équivalente (p.i.r.e.) ne dépasse pas l'intensité nécessaire à l'établissement d'une communication satisfaisante.

Ce matériel est conforme aux limites de dose d'exposition aux rayonnements, CNR-102 énoncée dans un autre environnement.cette eqipment devrait être installé et exploité avec distance minimale de 20 entre le radiateur et votre corps.