FMB2YX User Manual

V0.09

Table of contents

1 INTRODUCTION.....7

1.1 ATTENTION.....7
1.2 INSTRUCTIONS OF SAFETY.....7
1.3 LEGAL NOTICE.....8
1.4 ABOUT DOCUMENT.....8

2 BASIC DESCRIPTION.....8

2.1 PACKAGE CONTENTS.....9
2.2 BASIC CHARACTERISTICS.....9
2.3 TECHNICAL FEATURES.....10
2.4 TECHNICAL INFORMATION ABOUT INTERNAL BATTERY.....11
2.5 ELECTRICAL CHARACTERISTICS.....13
2.6 ABSOLUTE MAXIMUM RATINGS.....14

3 CONNECTION, PINOUT, ACCESSORIES.....15

3.1 HOW TO INSERT SIM CARD AND HOW TO CONNECT BATTERY INTO FMB2YX DEVICE:.....15
3.2 INSTALLING FMB2YX DRIVERS.....16
3.3 NAVIGATE LED.....18
3.4 STATUS LED.....18
3.5 MAIN CABLE WIRING.....18
3.6 USB CONNECTION.....20
3.7 ACCESSORIES.....21

4 FIRMWARE.....24

4.1 UPDATING FIRMWARE USING USB CABLE.....24

5 OPERATIONAL BASICS.....25

5.1 OPERATIONAL PRINCIPALS.....25
5.2 SLEEP MODES.....25
5.2.1 GPS Sleep mode.....25
5.2.2 Deep Sleep mode.....25
5.2.3 Online Deep Sleep mode.....26
5.2.4 Ultra Sleep mode.....26
5.3 VIRTUAL ODOMETER.....27
5.4 FEATURES.....28
5.4.1 ECO driving/Green driving Scenarios.....28
5.4.2 OverSpeeding Scenario.....29
5.4.3 Jamming detection.....29
5.4.4 Trip.....29
5.4.5 DOUT Control Via Call.....29
5.4.6 Immobilizer.....29
5.4.7 iButton read notification.....29
5.4.8 GPS Fuel Counter.....29
5.5 ACCELEROMETER FEATURES.....29
5.5.1 Excessive Idling.....29
5.5.2 *Unplug Detection.....30*
5.5.3 Towing Detection.....30
5.5.4 Crash Detection.....30
5.6 BLUE-TOOTH.....30
5.7 AUTO GEOFENCE.....30
5.8 MANUAL GEOFENCE.....30
5.9 IBUTTON LIST.....31

6 CONFIGURATION.....31

6.1 CONFIGURATOR 31
6.1.1 Main Buttons description: *32*
6.1.2 Keyword SMS (GPRS) commands: *33*
6.1.3 Keyword configuration with TCP *33*
6.2 STATUS INFO 33
6.3 SECURITY INFO 34
6.4 SYSTEM SETTINGS 34
6.5 GPRS 36
6.6 SMS/CALL SETTINGS 37
6.7 GSM OPERATORS, SIM1 ROAMING AND SIM2 ROAMING/ HOME OPERATOR LIST, BLACKLIST OPERATOR LIST 39
6.7.1 Dual SIM *41*
6.8 DATA ACQUISITION MODE SETTINGS 43
6.9 FEATURES SETTINGS 45
6.9.1 Green Driving *46*
6.9.2 Over Speeding *47*
6.9.3 Jamming *48*
6.9.4 Use authorized numbers to control DOUT via call *49*
6.9.5 Immobilizer *49*
6.9.6 iButton read notification *50*
6.9.7 GPS Fuel Counter *50*
6.10 ACCELEROMETER FEATURES 51
6.10.1 Excessive Idling *51*
6.10.2 Unplug Detection *51*
6.10.3 Towing Detection *51*
6.10.4 Crash Detection *52*
6.11 DOUT ON/OFF DURATION 53
6.12 DOUT CONTROL DEPENDING ON FUNCTIONALITY PRIORITY 54
6.13 AUTOGEOFENCING SETTINGS 54
6.14 MANUAL GEOFENCE 55
6.15 TRIP \ ODOMETER 56
6.15.1 Trip settings *56*
6.15.2 Advanced Trip Settings *57*
6.15.3 Odometer *58*
6.16 BLUE-TOOTH 59
6.16.1 General functionality *59*
6.16.2 How to connect blue-tooth Hands Free adapter to FMB device *60*
6.16.3 Device's log using your mobile phone *62*
6.16.4 Device debug over Android smartphone *63*
6.16.5 How to connect OBD II blue-tooth Dongle to FMB device *64*
6.16.6 How to connect blue-tooth Low Energy device to FMB device *67*
6.17 SMS EVENTS 69
6.18 IBUTTON LIST 71
6.19 I/O SETTINGS 71
6.19.1 Operand On Exit *72*
6.19.2 Operand On Entrance *72*
6.19.3 Operand On Both *72*
6.19.4 Operand Monitoring *72*
6.19.5 Operand On Hysteresis *73*
6.19.6 Operand On Change *73*
6.19.7 Operand On Delta Change *73*
6.19.8 Avg const (Averaging parameter description) *74*
6.19.9 OBD II (blue-tooth) and LVCAN I/O elements *74*

7 SMS COMMAND LIST 75

7.19.10 getinfo *77*
7.19.11 getver *78*
7.19.12 getstatus *78*

7.19.13 getgps *78*
7.19.14 getio *79*
7.19.15 ggps *79*
7.19.16 readio # *79*
7.19.17 getparam *79*
7.19.18 setparam *79*
7.19.19 flush #,#,#,#,#,#,# *80*
7.19.20 countrecs *80*
7.19.21 deleterecords *80*
7.19.22 setdigout *80*
7.19.23 battery *80*
7.19.24 fc_reset *81*
7.19.25 towingreact *81*
7.19.26 odoset:# *81*
7.19.27 odoget *81*
7.19.28 btgetlist # *81*
7.19.29 obdinfo *81*
7.19.30 faultcodes *81*
7.19.31 setkey # # *82*
7.19.32 delkey # # *82*
7.19.33 bbread # *82*
7.19.34 bbinfo # *82*
7.19.35 sdformat *82*
7.19.36 lvcansetprog # *82*
7.19.37 lvcangetprog *82*
7.19.38 lvcangetinfo *82*
7.19.39 lvcanclear # *82*
7.19.40 allcanmode *83*
7.19.41 lvcanmode *83*
7.19.42 lvcanfaultcodes *83*

8 DEBUG MODE 84

9 PARAMETER LIST 85

9.1 PARAMETERS VALUE TYPES 85
9.2 SYSTEM PARAMETERS 85
9.2.1 Sleep Mode (ID=102) *85*
9.2.2 Sleep timeout (ID=103) *85*
9.2.3 Movement Source (ID=100) *85*
9.2.4 Static Navigation (ID=106) *85*
9.2.5 Analog input value range (ID=111) *86*
9.2.6 Static Navigation Settings (ID=112) *86*
9.2.7 Saving/Sending without time synchronization (ID=107) *86*
9.2.8 GNSS Source (ID=109) *86*
9.2.9 Ignition settings (ID=101) *86*
9.2.10 High voltage level (ID=104) *87*
9.2.11 Low voltage level (ID=105) *87*
9.2.12 Movement Start Delay(s) (ID=19001) *87*
9.2.13 Movement Stop Delay(s) (ID=19002) *88*
9.2.14 Led indication (ID=108) *88*
9.2.15 Synchronization settings (ID=900) *88*
9.2.16 NTP Resync (ID=901) *88*
9.2.17 NTP server 1 (ID=902) *88*
9.2.18 NTP server 2 (ID=903) *88*
9.2.19 Battery charge mode (ID=110) *89*
9.3 GPRS PARAMETERS 89
9.3.1 Sorting (ID=1002) *89*
9.3.2 Open Link Timeout (ID=1000) *89*

9.3.3 Server Response Timeout (ID=1001).....89
9.3.4 SIM1 GPRS content activation (ID=2000).....89
9.3.5 SIM1 APN Name (ID=2001).....90
9.3.6 SIM1 APN username (ID=2002).....90
9.3.7 SIM1 APN Password (ID=2003).....90
9.3.8 Domain (ID=2004).....91
9.3.9 Target Server Port (ID=2005).....91
9.3.10 Protocol (ID=2006).....91
9.3.11 Backup Server Domain (ID=2007).....91
9.3.12 Backup Server Port (ID=2008).....91
9.3.13 Backup Server Protocol (ID=2009).....91
9.3.14 Backup Server Mode (ID=2010).....92
9.3.15 FOTA WEB status (ID=13003).....92
9.3.16 FOTA WEB Domain (ID=13000).....92
9.3.17 FOTA WEB port (ID=13001).....92
9.3.18 FOTA WEB Period (min) (ID=13002).....92
9.4 SMS/CALL SETTINGS.....92
9.4.1 SMS data sending settings (ID=3000).....92
9.4.2 Data send number (ID=3001).....93
9.4.3 Authorized phone numbers (ID=4000-4199).....93
9.4.4 GSM Predefined Numbers (ID=6000-6009).....93
9.4.5 SMS Login (ID=3003).....94
9.4.6 SMS Password (ID=3004).....94
9.4.7 Incoming call action (ID=3005).....94
9.4.8 SMS Event Time Zone (ID=3006).....94
9.4.9 Hands Free Call Settings (ID=3007).....94
9.4.10 GSM number index (ID=3008).....94
9.5 GSM OPERATORS.....95
9.5.1 SIM1 Roaming Operator List (ID=5000-5049).....95
9.5.2 Black List (ID=5500-5549).....95
9.6 DATA ACQUISITION MODES PARAMETERS.....95
9.6.1 Home Network GSM operator code "Vehicle on STOP" parameters.....95
9.6.2 Home Network GSM operator code "Vehicle MOVING" parameters.....96
9.6.3 Roaming Network GSM operator code "Vehicle on STOP" parameters.....97
9.6.4 Roaming Network GSM operator code "Vehicle MOVING" parameters.....98
9.6.5 Unknown Network GSM operator code "Vehicle on STOP" parameters.....99
9.6.6 Unknown Network GSM operator code "Vehicle MOVING" parameters.....100
9.7 FEATURES PARAMETERS.....101
9.7.1 Green driving parameters.....101
9.7.2 Overspeeding scenario parameters.....106
9.7.3 Jamming scenario parameters.....109
9.7.4 Immobilizer scenario parameters.....110
9.7.5 Trip scenario parameters.....112
9.7.6 DOUT control via call scenario parameters.....115
9.7.7 iButton read notification.....116
9.8 AUTOGEOFENCING SCENARIO PARAMETERS.....116
9.8.1 AutoGeofencing priority (ID=20000).....116
9.8.2 Eventual Records (ID=20002).....117
9.8.3 Activation Timeout (ID=20003).....117
9.8.4 Deactivate by (ID=20005).....117
9.8.5 AutoGeofence event generating (ID=20001).....118
9.8.6 Radius (ID=20004).....118
9.8.7 AutoGeofence Send SMS to (ID=7030).....118
9.8.8 SMS Text (ID=8030).....119
9.9 MANUAL GEOFENCE.....119
9.9.1 First Geozone parameters.....119
9.9.2 Other Geozones.....125
9.10 GPS FUEL COUNTER.....125

9.10.1 City Consumption L/100km (ID=11900).....125
9.10.2 Highway Consumption L/100km (ID=11901).....126
9.10.3 Average Consumption L/100km (ID=11902).....126
9.10.4 City Speed [km/h] (ID=11903).....127
9.10.5 Highway Speed [km/h] (ID=11904).....127
9.10.6 Average Speed [km/h] (ID=11905).....128
9.10.7 Correction coefficient (ID=11906).....128
9.10.8 Fuel Consumption on Idling [L/h] (ID=11907).....129
9.10.9 Higher Speeds Add [%] (ID=11908).....129
9.10.10 Highway Consumption every km/h (ID=11909).....130
9.11 ACCELEROMETER FEATURES.....130
9.11.1 Unplug Detection.....130
9.11.2 Towing Detection.....131
9.11.3 Crash Detection.....135
9.11.4 Excessive idling.....136
9.12 BLUE-TOOTH.....140
9.13 IBUTTON LIST (ID=30000 – 30500).....143
9.14 I/O PARAMETERS.....143
9.14.1 I/O#1 property parameter priority Ignition (ID=50000).....143
9.14.2 I/O#1 operand (ID=50001).....143
9.14.3 I/O#1 High level (ID=50002).....143
9.14.4 I/O#1 Low level (ID=50003).....144
9.14.5 I/O#1 Event only (ID=50004).....144
9.14.6 I/O#1 averaging length (ID=50005).....144
9.14.7 I/O#1 send SMS (ID=7000).....145
9.14.8 I/O#1 SMS text (ID=8000).....145
9.14.9 I\O elements parameters and types.....145
9.15 OBD II (BLUE-TOOTH).....152
9.15.1 1st OBD II (blue-tooth) property parameter priority (ID=40100).....152
9.15.2 1st OBD II (blue-tooth) property parameter operand (ID=40101).....152
9.15.3 1st OBD II (blue-tooth) property parameter High level (ID=40102).....152
9.15.4 1st OBD II (blue-tooth) property parameter Low level (ID=40103).....153
9.15.5 1st OBD II (blue-tooth) property parameter Event only (ID=40104).....153
9.15.6 1st OBD II (blue-tooth) property parameters Send SMS to (ID=7038).....153
9.15.7 1st OBD II (blue-tooth) property parameters SMS Text (ID=8038).....154
9.15.8 All OBD II (blue-tooth) I/O elements parameters property ID.....154

10 MOUNTING RECOMMENDATIONS.....156

10.1 CONNECTING WIRES.....156
10.2 CONNECTING POWER SOURCE.....156
10.3 CONNECTING IGNITION WIRE.....156
10.4 CONNECTING GROUND WIRE.....156

11 FMB2YX INSTALLATION INSTRUCTION.....157

11.1 POSSIBLE MOUNTING ZONES.....158
11.1.1 Trucks.....158
11.1.2 Tractors.....159
11.1.3 Motor bikes.....159
11.1.4 Light vehicles.....160
11.1.5 Recommended mounting positions.....161
11.1.6 Restrictions.....162
11.1.7 Connecting power wires.....163
11.1.8 Other recommendations.....163

12 DOWNLOADING LOG USING "HERCULES" APPLICATION.....164

13 CHANGE LOG.....166

1 INTRODUCTION

1.1 Attention

Do not disassemble the device. If the device is damaged, the power supply cables are not isolated or the isolation is damaged, before unplugging the power supply, do not touch the device.

All wireless data transferring devices produce interference that may affect other devices which are placed nearby.

The device must be connected only by qualified personnel.

The device must be firmly fastened in the predefined location.

The programming must be performed using a second class PC (with autonomic power supply).

The device is susceptible to water and humidity in environment with IP class greater than IP67.

Any installation and/or handling during a lightning storm are prohibited.

FMB2YX has USB interface;
Please use cables provided with FMB2YX device.
Teltonika is not responsible for any harm caused by using wrong cables for PC <-> FMB2YX connection.

1.2 Instructions of safety

This chapter contains information on how to operate FMB2YX safely. By following these requirements and recommendations, you will avoid dangerous situations. You must read these instructions carefully and follow them strictly before operating the device!

The device uses SELV limited power source. The device uses a 6 V...30 V DC power supply. The nominal voltage is 12 V DC. The allowed range of voltage is 6 V...30 V DC.

To avoid mechanical damage, it is advised to transport the FMB2YX device in an impact-proof package. Before usage, the device should be placed so that its LED indicators are visible, which show the status of operation the device is in.

When installing the connection cables to the vehicle, the appropriate jumpers of the power supply of the vehicle should be disconnected.

Before dismounting the device from the vehicle, the connection cables must be disconnected.

The device is designed to be mounted in a zone of limited access, which is inaccessible for the operator. All related devices must meet the requirements of standard EN 60950-1.

The device FMB2YX is not designed as a navigational device for boats.

1.3 Legal Notice

Copyright © 2018 Teltonika. All rights reserved. Reproduction, transfer, distribution or storage of part or all of the contents in this document in any form without the prior written permission of Teltonika is prohibited.

Other products and company names mentioned here may be trademarks or trade names of their respective owners.

The manufacturer reserves the right to make changes and/or improvements at any time in design, functionality, parameters and electrical characteristics without any prior notice and without incurring obligations.

1.4 About document

This document contains information about the architecture, possibilities, mechanical characteristics, and configuration of the FMB2YX device.

Acronyms and terms used in document

PC – Personal Computer,

GPRS – General Packet Radio Service,

GPS – Global Positioning System,

GSM – Global System for Mobile Communications,

SMS – Short Message Service,

AC/DC – Alternating Current/Direct Current,

I/O – Input/Output,

SIM Card – Subscriber Identity Module for a mobile phone,

USB - Universal Serial Bus,

TCP - Transmission Control Protocol,

UDP - User Datagram Protocol,

Record – AVL data stored in FMB2YX memory. AVL data contains GPS and I/O information,

AVL packet - data packet that is being sent to server during data transmission. AVL packet contains from 1 to 50 records.

2 BASIC DESCRIPTION

FMB2YX is a terminal with GPS and GSM connectivity, which is able to determine the object's coordinates and transfer them via the GSM network. This device is perfectly suitable for applications, which need location acquirement of remote objects. It is important to mention that FMB2YX has additional inputs and outputs, which let you control and monitor other devices on remote objects. FMB2YX also has a USB port for device status log output and entering configurations.

2.1 Package contents[1]

The FMB2YX device is supplied to the customer in a cardboard box containing all the equipment that is necessary for operation. The package contains:

FMB2YX device with case and wires;
USB cable (optional);
Integrated Ni-MH battery 7.2V, 400mAh for FMB202 or FMB206 device;
Integrated Li-ion battery 3,7V, 1800 mA, for FMB204 device;
GNSS antenna for FMB206 device.

2.2 Basic characteristics

GSM / GPRS features:

- Teltonika TM2500 quad band module (GSM 850 / 900 / 1800 / 1900 MHz);
- GPRS class 12;
- SMS (text, data).
- Integrated GNSS receiver.
- Up to -162 dBm GNSS receiver sensitivity.

GNSS features:

- Tracking: 33/ 99 acquisition channels;
- Up to -165 dBm sensitivity;
- Hot start < 1s;
- Warm start < 25s;
- Cold start < 35s;
- NMEA -183 protocol;
- GPS, GLONASS, GALILEO, BEIDOU, SBAS, QZSS, DGPS, AGPS;
- Accuracy < 3m.

Hardware features:

- 128 MB internal Flash memory[2];
- Built-in movement sensor;
- Integrated Ni-MH battery 7.2V, 400mAh for FMB202 or FMB206 device;
- Integrated Li-ion battery 3,7V, 1800 mA, for FMB204 device ;
- Internal High Gain GSM antenna;
- Internal High Gain GNSS antenna[3];

Interface features:

- Power supply: 6 … 30V;
- USB port;
- 3 digital inputs;
- 1 analog input;
- 2 open collector digital outputs (connecting external relays, LED's, buzzers etc.);
- 1Wire® temperature sensor;

[1] Package content depends on Order Code, and can be customized by customer needs.
[2] Teltonika reserves the right to modify the functionality of the device without any prior notice.
[3] For FMB206 external GNSS antenna.

- 1Wire® iButton;
- 2 LED's indicating device status.

Special features:

- High Quality track even in high density urban canyon;
- Ready for harsh environment;
- Any element event triggers (external sensor, input, speed, temperature, etc.);
- Highly configurable data acquisition and sending;
- Multiple Geo-fence areas;
- Sleep mode;
- Deep sleep mode;
- Configurable scenarios available;
- Real-time process monitoring;
- Authorized number list for remote access;
- Firmware update over GPRS or USB port;
- Configuration update over GPRS, SMS or USB port;
- TCP/IP or UDP/IP protocol support;
- >500000 record storing;
- Overvoltage protection.

Table 1. FMB2YX Supply voltage.

Description	Voltage	Duration
Normal operation	6-30V	Unlimited
Protection turns on, device turns off.	34V	Unlimited
Maximum voltage	<70V	Unlimited
Maximum voltage impulse	120V	10 milliseconds

2.3 Technical features

Table 2. FMB2YX specifications.

Part name	Physical specification	Technical details
Navigation LED	LED	Power supply 6...30 V DC 1.5W Max device energy consumption:[1] FMB202 GPRS: ⎓ average 33.5 mA r.m.s, FMB204 GPRS: ⎓ average 40.1 mA r.m.s, FMB206 GPRS: ⎓ average 34.6 mA r.m.s, FMB202 Nominal: ⎓ average 27.6 mA r.m.s, FMB204 Nominal: ⎓ average 28.3 mA r.m.s, FMB206 Nominal: ⎓ average 28.1 mA r.m.s, FMB202 GPS Sleep: ⎓ average 11.6 mA, FMB204 GPS Sleep: ⎓ average 15.7 mA, FMB206 GPS Sleep: ⎓ average 10.2 mA, FMB202 Online Sleep: ⎓ average 4.0 mA, FMB204 Online Sleep: ⎓ average 4.2 mA, FMB206 Online Sleep: ⎓ average 4.0 mA,
Modem LED	LED	
USB	Micro USB socket	

[1] Energy consumption has been tested at 12V voltage.

		FMB202 Deep Sleep: ⎓ average 3.7 mA,[1] FMB204 Deep Sleep: ⎓ average 3.9 mA, FMB206 Deep Sleep: ⎓ average 3.6 mA, FMB202 Ultra Sleep: ⎓ average 1.9 mA,[2] FMB204 Ultra Sleep: ⎓ average 2.1 mA, FMB206 Ultra Sleep: ⎓ average 1.8 mA, FMB202 & FMB206 Battery charge current: ⎓ max. 80 mA, Can be charged at up to 40°C; FMB204 Battery charge current: ⎓ max. 207 mA, Can be charged at up to 45°C; Operation temperature: -25°C ... +55°C Storage temperature: -40°C ... +70°C Storage relative humidity 5 ... 95 % (no condensation)

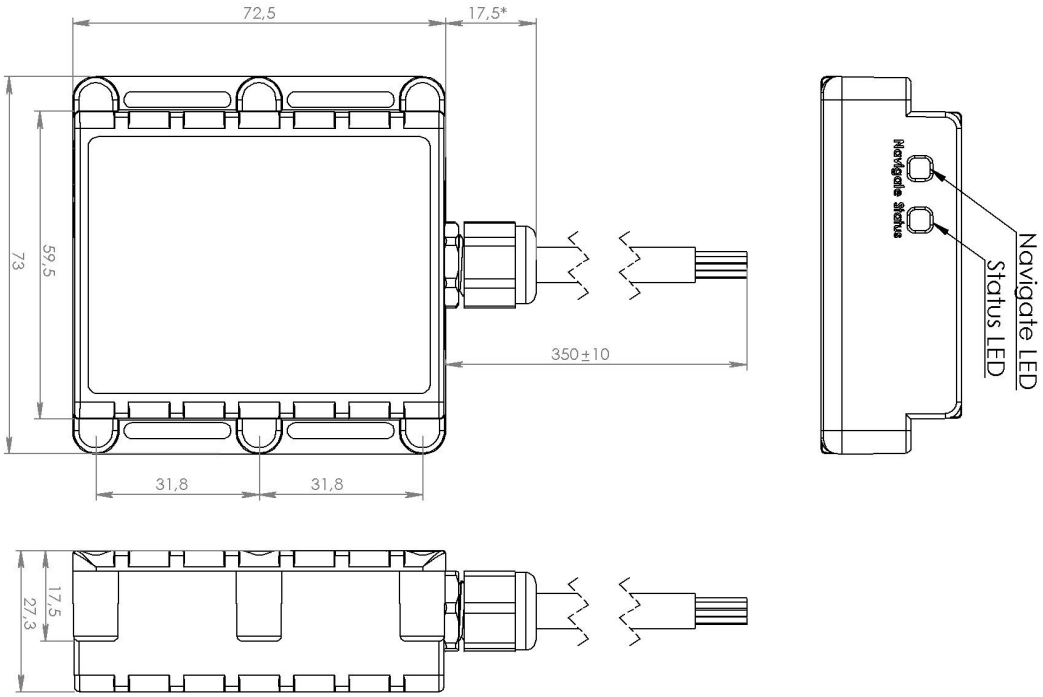

Figure 1. FMB2YX view & dimensions (tolerance ±2mm)

2.4 Technical Information about internal battery

[1] When in Deep Sleep mode, data storing and sending is not activated.
[2] When in Ultra Sleep mode, data storing and sending is not activated.

Table 3. Li-ion and Ni-MH batterys details.

Internal back-up battery	Battery voltage (V)	Nominal capacity (mAh)	Power(Wh)	Charging temperature (°C)
Li-ion rechargeable battery	3,75 ~ 3,90	1800	6,75 – 7,02	0 – 45
Ni-MH Prismatic Battery pack	7,2 ~ 7,5	400	2,95 – 3,07	0 – 40

Table 4. Battery charging ranges.

System voltage (V)	Charging range (V)
6	6,05 - 8
12	12,1 - 16
24	24,2 - 32

FMB2YX internal battery is used for detecting external voltage disconnection.

CAUTION: RISK OF EXPLOSION IF BATTERY IS REPLACED BY AN INCORRECT TYPE. DISPOSE OF USED BATTERIES ACCORDING TO THE INSTRUCTIONS.

Battery should not be disposed of with general household waste.
Bring damaged or worn-out batteries to your local recycling center or dispose them to battery recycle bin found in stores.

Warranty: batteries are covered by 6 months warranty support.

2.5 *Electrical characteristics*

Table 5. FMB2YX electrical characteristics.

CHARACTERISTIC DESCRIPTION \ VALUE	Min.	Typ.	Max.	Unit
Supply Voltage:				
Supply Voltage (Recommended Operating Conditions)	6		30	V
Digital Output (Open Drain grade):				
Drain current (Digital Output OFF)			120	µA
Drain current (Digital Output ON, Recommended Operating Conditions)			1.2	A
Static Drain-Source resistance (Digital Output ON)			120	mΩ
Digital Input:				
Input resistance (DIN1)		59.9		kΩ
Input resistance (DIN2, DIN3)		67.5		kΩ
Input Voltage (Recommended Operating Conditions)	0		60	V
Input Voltage threshold (DIN1)	7.5	7.7	8	V
Input Voltage threshold (DIN2, DIN3)	2.5	2.7	3	V
Analog Input:				
Input Voltage (Recommended Operating Conditions), Range1	0		10	V
Input resistance, Range1		120		kΩ
Input Voltage (Recommended Operating Conditions) Range2	0		30	V
Input resistance, Range2		146.7		kΩ
Output Supply Voltage 1-Wire:[1]				
Supply Voltage		3.8		V
Output inner resistance	450		600	mΩ
Output current (U_{out} > 3.0V)			75	mA
Short circuit current (U_{out} = 0)			75	mA

Note: Analog Input error margin can increase if temperature varies.

[1] 1-wire Supply voltage PIN is dedicated for 1-wire devices ONLY, do not use it for any other purpose.

2.6 Absolute Maximum Ratings

Table 6. FMB2YX absolute maximum ratings.

CHARACTERISTIC DESCRIPTION \ VALUE	Min.	Typ.	Max.	Unit
Supply Voltage (Absolute Maximum Ratings)	-32		32	V
Drain-Source clamp threshold voltage (Absolute Maximum Ratings), (I_{drain} = 2mA)			36	V
Digital Input Voltage (Absolute Maximum Ratings)	-32		32	V
Analog Input Voltage (Absolute Maximum Ratings)	-32		32	V

3 CONNECTION, PINOUT, ACCESSORIES

3.1 How to insert SIM card and how to connect battery into FMB2YX device:

①

Open FMB2YX case using screwdriver

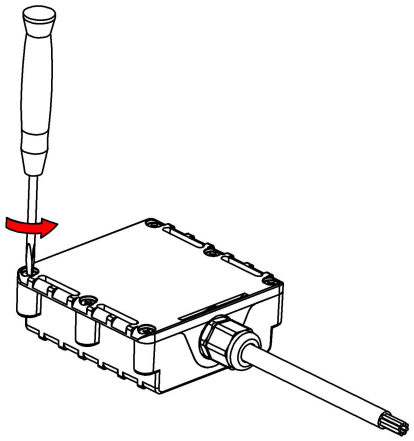

②

Remove FMB2YX case

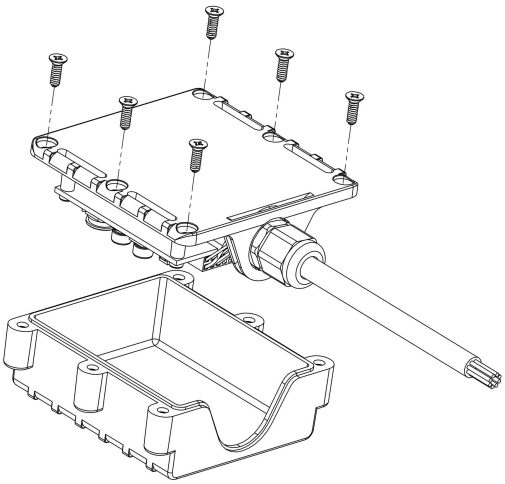

③

Insert SIM card as shown

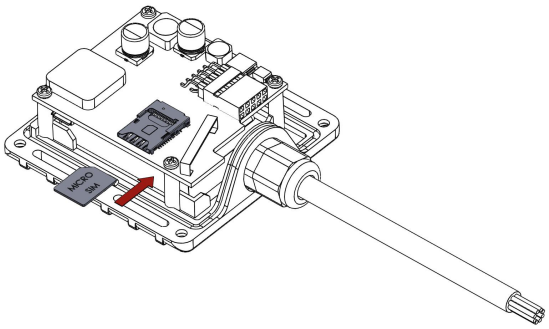

④

Connect battery connector as shown

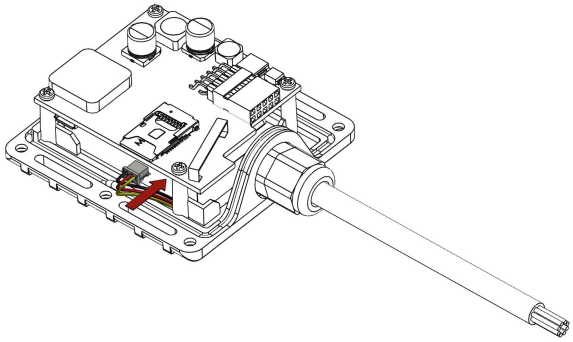

⑤

Attach case, and screw in the screws

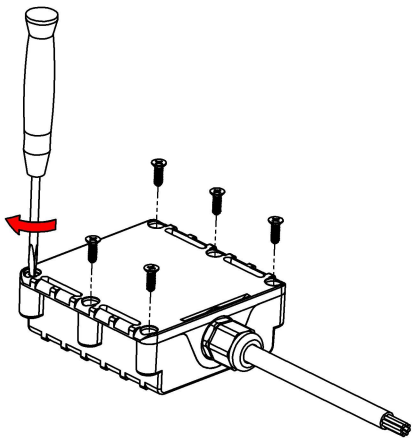

⑥

Device is ready

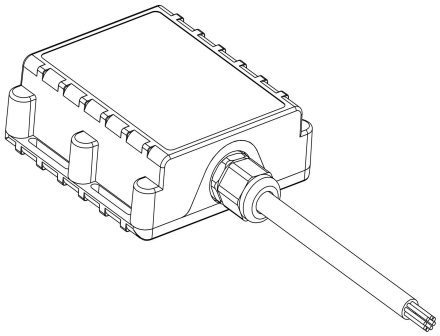

Note: SIM card insertion/removal must be performed when FMB device is powered off – external voltage and battery disconnected. Otherwise SIM card might be damaged or FMB device will not detect it.

3.2 Installing FMB2YX drivers

Table 7. Software requirements.

Operating system (OS)	Version	MS .NET Framework version
Windows XP with SP3 or later	32 bit and 64 bit	**MS .NET Framework 4** https://www.microsoft.com/en-US/Download/confirmation.aspx?id=17718 http://avl1.teltonika.lt/downloads/software/Framework/.NET%20Framework%204/dotNetFx40_Full_x86_x64.exe With **MS .NET Framework 4 update KB2468871-v2** update https://www.microsoft.com/en-us/download/details.aspx?id=3556 http://avl1.teltonika.lt/downloads/software/Framework/.NET%20Framework%204%20update%20KB2468871-v2/
	32 bit 64 bit	**NDP40-KB2468871-v2-x86.exe** **NDP40-KB2468871-v2-x64.exe or NDP40-KB2468871-v2-IA64.exe**
Windows Vista Windows 7 Windows 8/8.1 Windows 10	32 bit and 64 bit	**MS .NET Framework 4.6.2** https://www.microsoft.com/en-us/download/confirmation.aspx?id=53344 http://avl1.teltonika.lt/downloads/software/Framework/.NET%20Framework%204.6.2/NDP462-KB3151800-x86-x64-AllOS-ENU.exe

Drivers:

Please download Virtual COM Port drivers from Teltonika website:
https://teltonika.lt/downloads/en/fmb120/TeltonikaCOMDriver.zip

Installing drivers:

Extract and run TeltonikaCOMDriver.exe. This driver is used to detect FMB2YX device connected to the computer. Click 'Next' in driver installation window (figures below):

Figure 2. Driver installation window

This will launch device driver installation wizard. In the following window click 'Next' button again:

Figure 3. Driver installation window

Setup will continue installing drivers and will display a window about successful process at the end. Click 'Finish' to complete setup:

Figure 4. Driver installation window

You have now installed drivers for FMB2YX device successfully.

3.3 Navigate LED

Table 8. FMB2YX navigation LED description.

Behaviour	Meaning
Permanently switched on	GPS signal is not received
Blinking every second	Normal mode, GPS is working
Off	GPS is turned off because: Deep sleep mode Or GPS antenna short circuited

3.4 Status LED

Table 9. FMB2YX status LED description.

Behaviour	Meaning
Blinking every second	Normal mode
Blinking every 2 seconds	Deep sleep mode
Blinking fast for a short time	Modem activity
Blinking fast constantly	Boot mode
Off	Device is not working Or Device firmware being flashed

3.5 Main cable wiring

Table 10. FMB2YX pinout description.

Nr.	Wire Name	Description	Wire color
1	VCC (6÷30)V DC (+)	Power supply for module. Power supply range (6...30) V DC	Red
2	DOUT 2	Digital output. Channel 2. Open collector output. Max. ⎓ 1.2A.	Violet
3	DOUT 1	Digital output. Channel 1. Open collector output. Max. ⎓ 1.2A.	White/Orange
4	DIN 2	Digital input, channel 2	White/Green
5	DIN 1	Digital input, channel 1 DEDICATED FOR IGNITION INPUT	Yellow
6	GND(VCC(6÷30)V DC)(-)	Ground pin. (6÷30)V DC (—)	Dark
7	AIN 1	Analog input, channel 1. Input range: 0-30V/0-10V DC	Grey
8	DATA_DALLAS	Data channel for Dallas 1-Wire® devices	Green
9	DIN 3	Digital input, channel 3	White
10	Ucc DALLAS	+ 3,8 V output for Dallas 1-Wire® devices. (max 20mA)	Blue

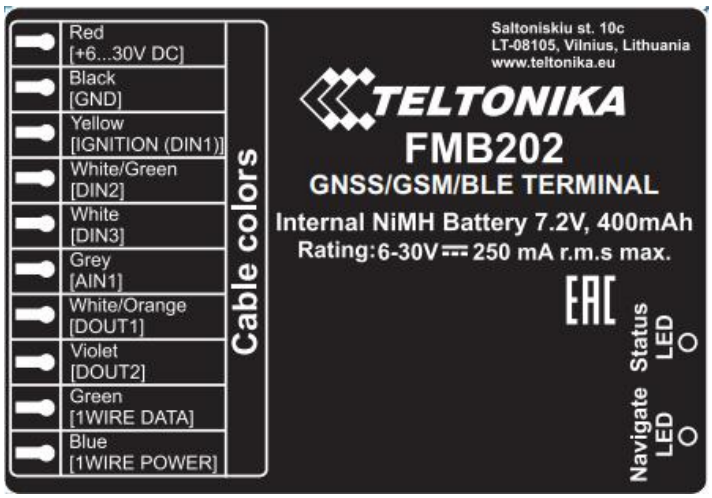

Figure 5. FMB202 sticker

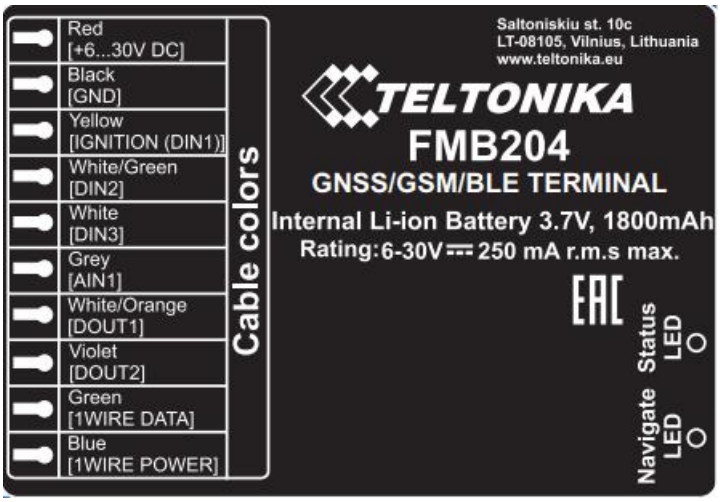

Figure 6. FMB204 sticker

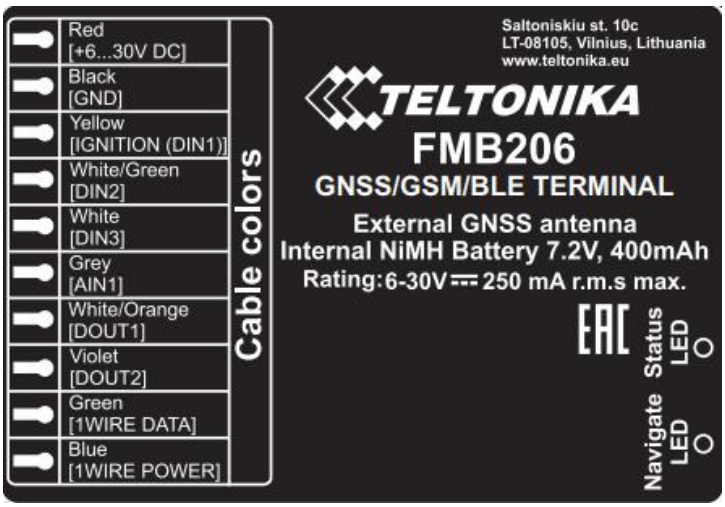

Figure 7. FMB206 sticker

3.6 USB connection

For connecting FMB2YX device to PC, micro USB cable is used. Cable can be connected after removing cover of FMB2YX:

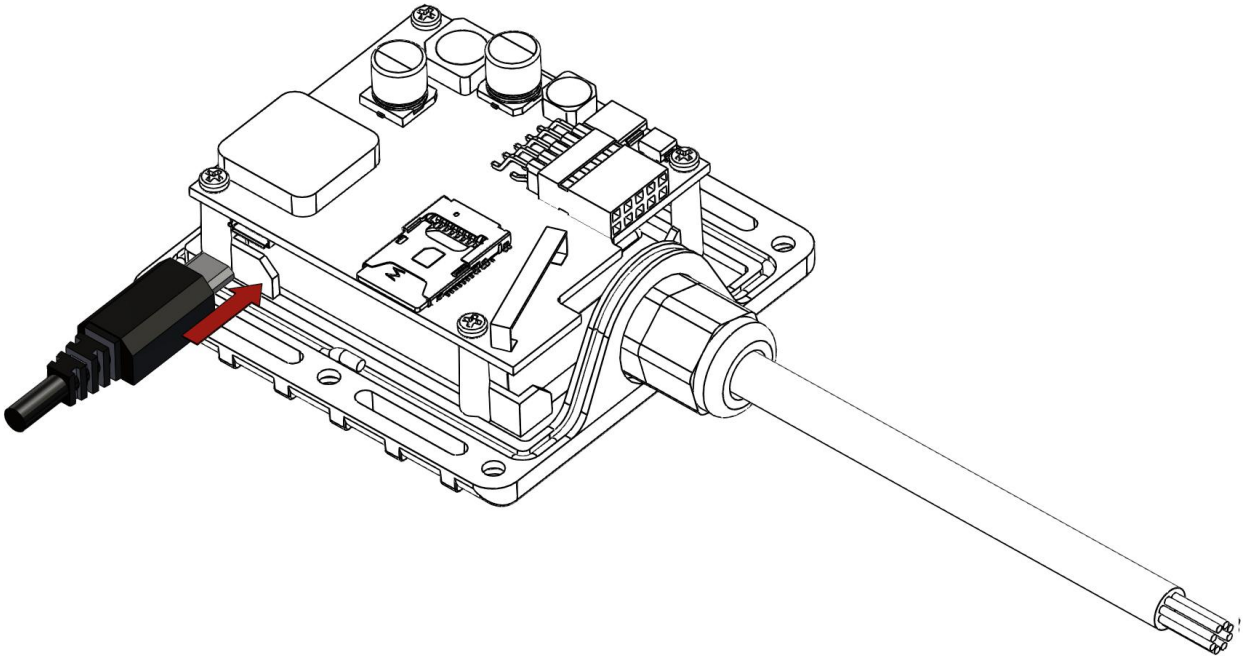

Figure 8. USB cable connection to the FMB2YX device

Please note that FMB2YX device must be connected to the power supply before it can be connected to the PC!

When FMB2YX is connected to PC, it creates an USB Modem COM Port, which can be used as a system port (to flash firmware and configure the device):

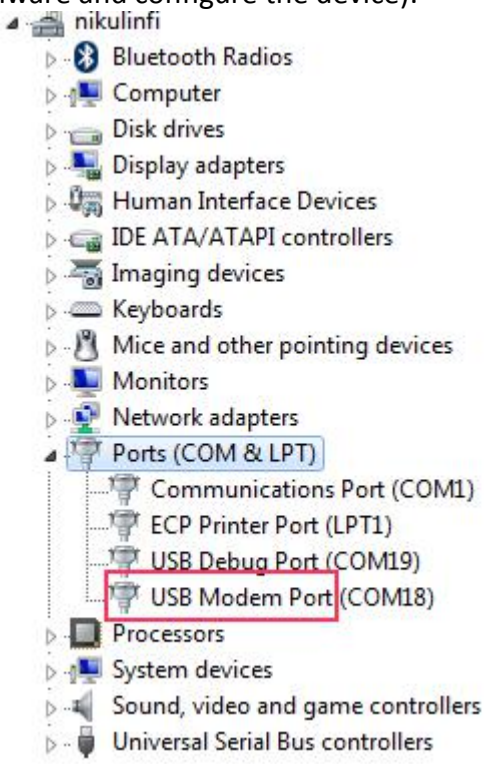

Figure 9. COM-Ports

3.7 Accessories

Note: Accessories are not included in device package, please order them separately.

1 – Wire devices

One of the realized features in FMB2YX is 1-Wire® data protocol, which enables connection of thermometer (DS1820, DS18S20 and DS18B20) and I-Button type: DS1990, DS1991, DS1994, DS1993, DS1992, DS1982, DS1995, DS1985, DS1996, DS1986, DS1971, DS1963L, DS1921, DS1973, DS1904, DS1972, DS1977, DS2413, DS1922/1923, DS1990A, DS1982U, DS1985U, DS1986U (Figures 10 and 11 show FMB2YX and 1-wire® device connection schemes). For additional information please refer to the 1-Wire Design Guide document.

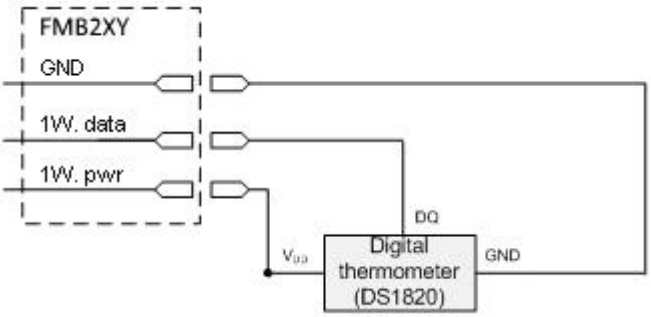

Left row of pins

1W. PWR (FMB2YX – Blue wire)	1
1W. Data (FMB2YX–Green wire)	2
GND (FMB2YX – Black wire)	3
Digital Input	4

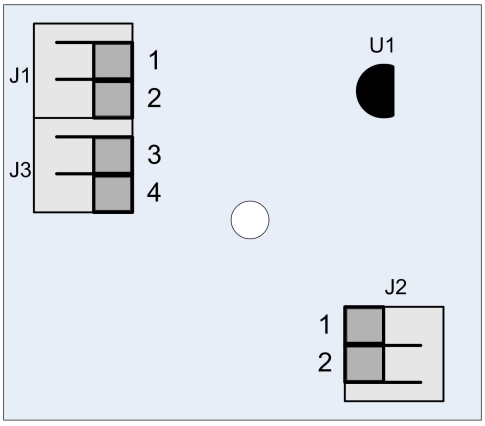

Right row of pins

1	Vpp (+5 Volts DC) – power source for external digital sensor
2	Output from external digital sensor

Figure 10. Digital thermometer DS1820 and TTJ100 connection scheme

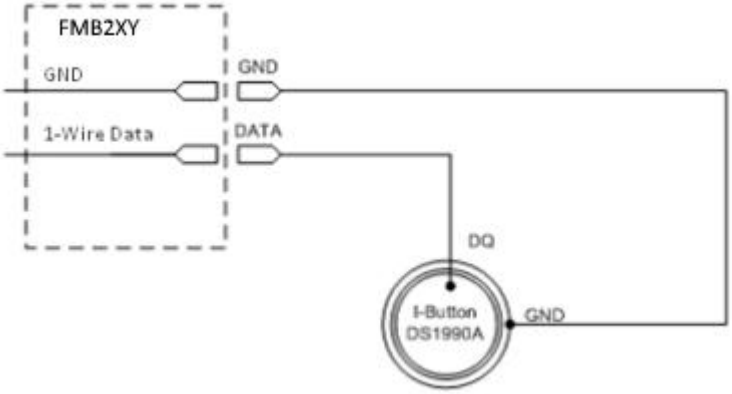

Figure 11. I-Button DS1990A connection scheme

Fuel Tank sensors

A fuel tank level sensor exists in most cars, which shows the approximate fuel level in the driver's indicator panel. It is possible to connect FMB2YX Analog input to it (if sensor returns analogue signal proportional to fuel level). Figure shows the connection scheme to the FMB2YX and fuel tank sensor. After the connection to the tank fuel level sensor, calibration is needed. Calibration is needed because most fuel tank sensors are not linear. Calibration is performed by measuring voltage dependence on volume of fuel in tank.

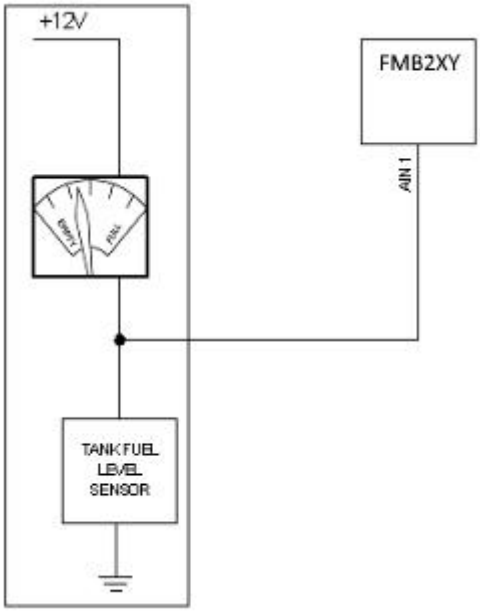

Figure 12. Fuel sensor scheme

Alarm buttons, door sensors, etc.

Alarm buttons, door sensors, ignition, etc. return two states: high or low voltage. Digital inputs are used to read this information. Figure below shows how to connect alarm button, door sensor, etc.

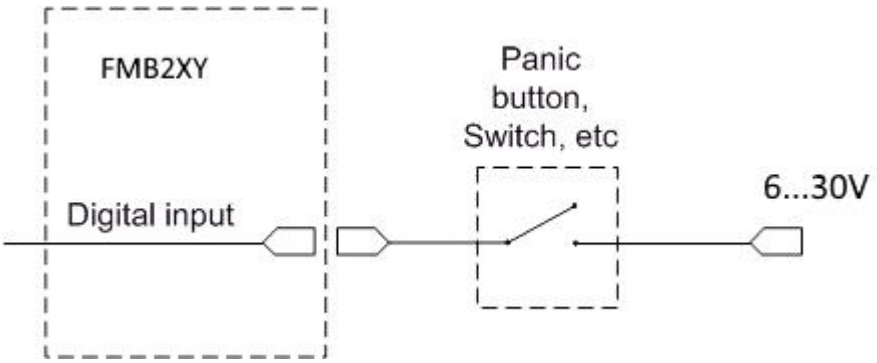

Figure 13. Panic button connection

In cases when sensor output signal is negative, an additional relay has to be installed to convert negative signal to positive.

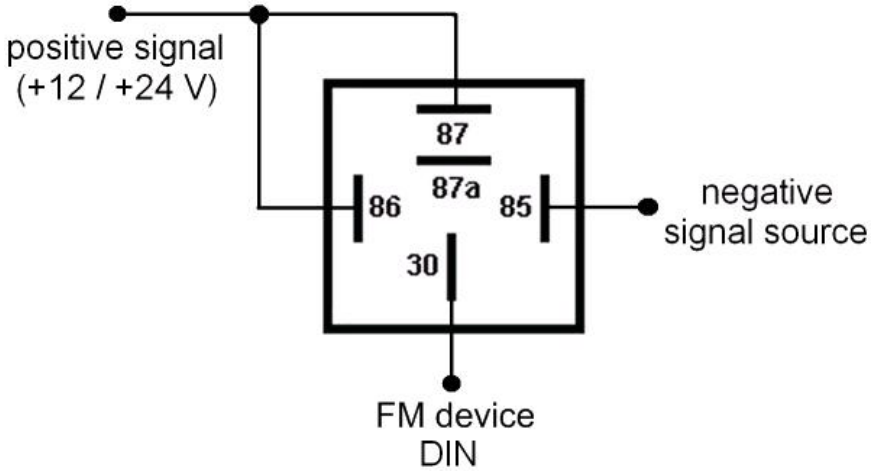

Figure 14. Inverting relay connection

Immobilizer relay

When connected as shown below, FMB2YX disables engine starter when output is OFF. More details about relays can be found below.

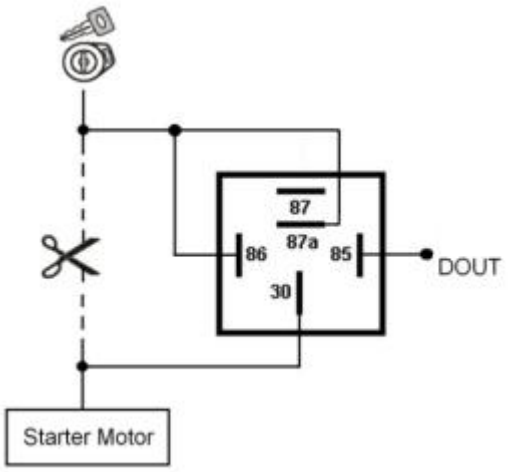

Figure 15. Immobilizer relay connection

Relays

An ordinary automotive relay is used to invert input signal or to immobilize engine starter. Note, that they are available as 12 V or 24 V.

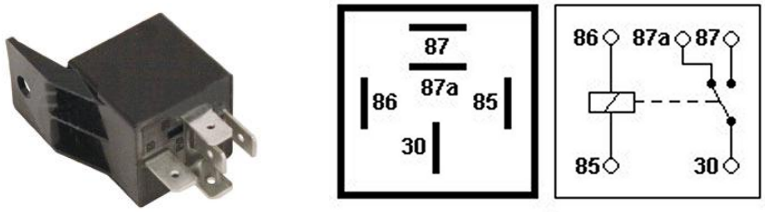

Figure 16. Automotive relay pinout

4 FIRMWARE

4.1 Updating firmware using USB cable

FMB2YX functionality is always improving, new firmware versions are developed. Current module firmware version can be retrieved from Configurator. See configuration description for details.

Contact sales manager to get the latest firmware.

Connect FMB2YX to PC with the USB cable. Launch Configurator, connect to COM port to which device is connected. To start firmware update, press “Update firmware” button in the top row, select your firmware file and press “Open”. Message prompt will appear asking “Do you really want to update firmware?”, press “Yes”. Update process may take up to several minutes.

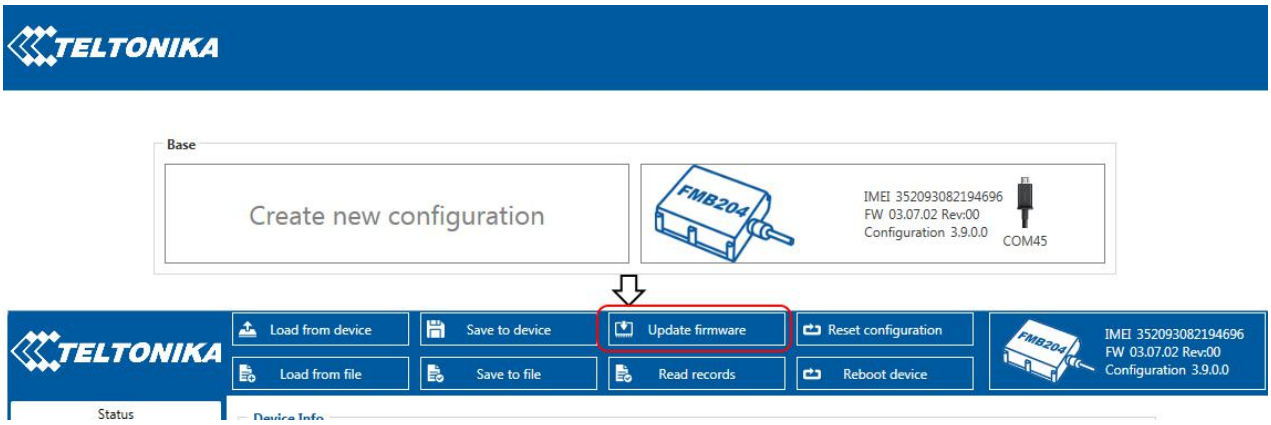

Figure 17. Firmware updater screen

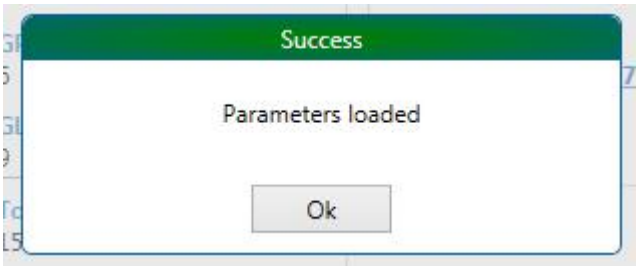

Figure 18. FMB2YX firmware updating

When you see a prompt like in Figure 18, it means that the firmware is flashed to FMB2YX successfully and the device is connected to the configurator. You may now start using your FMB2YX device.

5 OPERATIONAL BASICS

5.1 Operational principals

FMB2YX module is designed to acquire records and send them to the server. Records contain GPS data and I/O information. Module uses GPS receiver to acquire GPS data and is powered with three data acquire methods: time-based, distance-based and angle-based method. Note, that if FMB2YX loses connection to GPS satellites, it continues to make records, however coordinate in these records remains the same (last known coordinate).

GPRS and SMS settings are described in later sections. FMB2YX communicates with server using special data protocol.

FMB2YX can be managed by SMS commands. SMS Command list is described in SMS COMMAND LIST section. Module configuration can be performed over TCP or via SMS.

5.2 Sleep modes

There are four sleep modes: GPS sleep, Deep sleep, Online Deep sleep and Ultra sleep modes.

5.2.1 GPS Sleep mode

FMB2YX is able to go to GPS sleep mode after configurable Sleep timeout. This timeout (defined period) starts counting when device is in STOP mode. After timeout is reached and all conditions for GPS sleep mode are met, device goes to GPS sleep mode. While in GPS sleep mode, FMB2YX turns GPS module off and it is not making new periodic records. Only event records are being recorded with last known coordinate and sent to AVL server. As a result power usage decreases allowing to save vehicle battery.

FMB2YX can enter GPS sleep mode if **ALL** of these conditions are met:

- FMB2YX has to be configured to work in GPS Sleep mode and sleep timeout is reached;
- Device time must be synchronized with GPS satellites;
- No movement by configured movement source or movement sensor is detected;
- Ignition (configured Ignition Source) is off.

FMB2YX exits GPS sleep mode then if ONE of following conditions is true:

- Movement by Object Motion (Ignition, Msensor, GPS) or external movement sensor is detected;
- Ignition (configured Ignition Source) is turned on.

5.2.2 Deep Sleep mode

While in deep sleep mode, FMB2YX sets GPS receiver to sleep mode and turns off GSM/GPRS module (it is not possible to wake up device via SMS). Despite records with last

known coordinate are being saved and send to AVL server (GSM/GPRS module is turned on to send data and after that it is turned off again), power usage is decreased to save vehicle's battery. Note, that power saving depends on two configurable parameters: send period and min. record saving period.

FMB2YX can enter deep sleep mode if **ALL** of these conditions are met:

- FMB2YX has to be configured to work in Deep Sleep mode and Sleep timeout set;
- Device time must be synchronized with GPS satellites;
- No movement by movement sensor is detected;
- Ignition (configured Ignition Source) is off;
- Min. Record Saving Period (Data Acquisition Mode settings) must be bigger than Active Data Link Timeout parameter, that FMB2YX could close GPRS link.
- Send period (Data Acquisition Mode settings) minus Active Data Link Timeout must be more than 90 sec., that FMB2YX could close GPRS link for at least 90 sec.
- USB cable is not connected.

FMB2YX exits deep sleep mode when if **ONE** of following conditions are true:

- Movement by movement sensor is detected;
- Ignition (configured Ignition Source) is turned on;
- USB cable is connected;

5.2.3 Online Deep Sleep mode

While in Online Deep Sleep mode, device works just as in Deep sleep mode, but can receive SMS messages.

FMB2YX can enter Online Deep sleep mode if **ALL** of these conditions are met:

- FMB2YX has to be configured to work in Online Deep Sleep mode and Sleep timeout set;
- Device time must be synchronized with GPS satellites;
- No movement by movement sensor is detected;
- Ignition (configured Ignition Source) is off;
- Min. Record Saving Period (Data Acquisition Mode settings) must be bigger than Active Data Link Timeout parameter, that FMB2YX could close GPRS link.
- Send period (Data Acquisition Mode settings) minus Active Data Link Timeout must be more than 90 sec., that FMB2YX could close GPRS link for at least 90 sec.
- USB cable is not connected.

FMB2YX exits Online Deep sleep mode when if **ONE** of following conditions are true:

- Movement by movement sensor is detected;
- Ignition (configured Ignition Source) is turned on;
- USB cable is connected;

5.2.4 Ultra Sleep mode

While in Ultra sleep mode, device shuts down everything to preserve as much battery power as possible.

FMB2YX can enter Ultra sleep mode if **ALL** of these conditions are met:

- FMB2YX has to be configured to work in Ultra Sleep mode and Sleep timeout set;
- Device time must be synchronized with GPS satellites;
- No movement by movement sensor is detected;
- Ignition (configured Ignition Source) is off;
- Min. Record Saving Period (Data Acquisition Mode settings) must be bigger than Active Data Link Timeout parameter, that FMB2YX could close GPRS link.
- Send period (Data Acquisition Mode settings) minus Active Data Link Timeout must be more than 90 sec., that FMB2YX could close GPRS link for at least 90 sec.
- USB cable is not connected.

FMB2YX exits Online Deep sleep mode when if **ONE** of following conditions are true:

- Movement by movement sensor is detected;
- Ignition (configured Ignition Source) is turned on;
- USB cable is connected;

Note: In order to save GPRS traffic records saved in Deep sleep and Online Deep sleep modes do not contain below listed I/O elements information:
PDOP, HDOP, Odometer, Speedometer, iButton ID, Cell ID, Area Code, Temperature and GPS power

5.3 Virtual odometer

Virtual odometer is used to calculate traveled distance in FMB20X as separate I/O elements. When FMB20X detects movement, it starts counting distance using GNSS signal: every second it checks current location and calculates distance between current and previous point. It keeps adding these intervals until it is time to make a record, then FMB20X records its location and adds odometer value, which is equal to the sum of all distances, measured every second. The are two odometers I/O elements: Total odometer and Trip odometer.

Total odometer counts all distance traveled by vehicle. After device restart the value in this I/O element will not be erased. Total odometer value can be changed by SMS command “odoset” (SMS Command list is described in SMS COMMAND LIST section).

Trip odometer is Trip scenario element and it can be selected from two modes: Continuous and Between Records. Both modes requires ignition (configured ignition source) to be turned on.

When Between Records mode is selected, when record is made, odometer resets to zero and distance calculation starts all over again.

When Continuous odometer mode is selected, all distance calculations is counted from records and sums them to one distance. Continuous odometer stops counting, when vehicle is at stop and ignition is turned off.

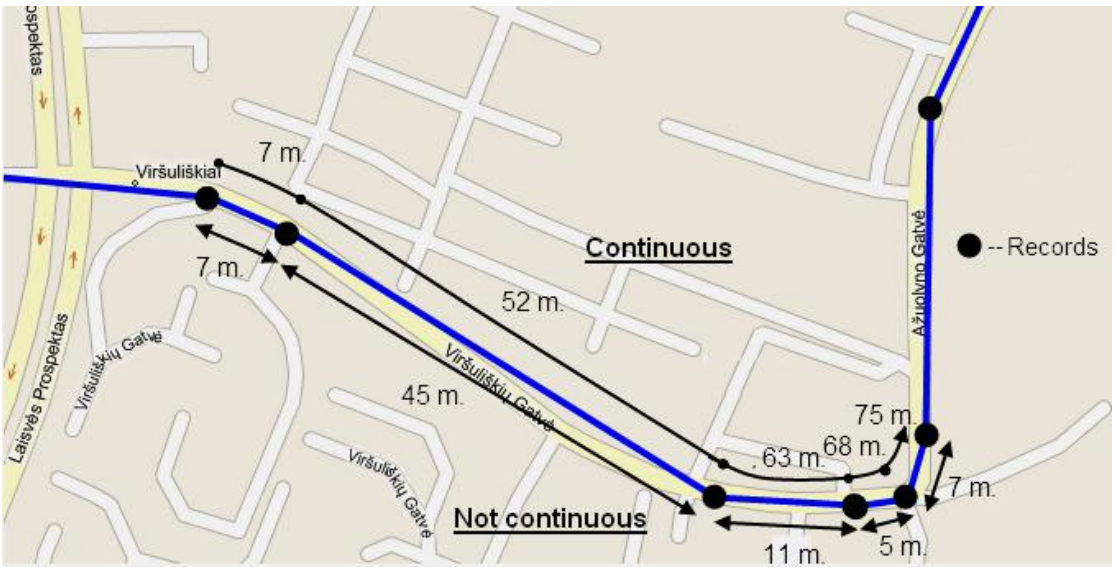

Figure 8 Odometer continuous and Not continuous distance counting parameter example

5.4 Features

Using available features can greatly increase FMB20X usability options.

5.4.1 ECO driving/Green driving Scenarios

ECO driving/Green driving Scenarios. Helps to prevent and inspect driver about harsh driving. Eco driving scenario continuously monitors: accelerating, braking and cornering forces depending on build in accelerometer or Green driving depending on GPS. The device inspects driver if needed. Monitoring sensitivity is configurable.

Digital output can be controlled by scenario for user needs, buzzer or LED for example. Output activation time after harsh event is also configurable.

To save GPRS traffic ECO driving/Green driving event will be **generated (included into records) only** when FMB20X measured values are higher than those set in configuration, without additional I/O settings.

To prevent generating false events, harsh acceleration and harsh braking is monitored only when following conditions are fulfilled:

- Ignition is ON (configured Ignition Source)
- Vehicle speed is equal or higher than 10km/h

Harsh cornering is monitored only when following conditions are fulfilled:

- Ignition is ON (configured Ignition Source)
- Vehicle speed is equal or higher than 30km/h

ECO driving or Green driving Scenario? Eco driving is based on accelerometer value and Green driving based on GPS position.

PLEASE NOTE that Eco Driving functionality generally is dependent on accelerometer. Auto calibration must be done before using ECO driving scenario. All information about auto calibration descrybed in 5.9.1.2 chapter.

5.4.2 OverSpeeding Scenario.

Helps to prevent from exceeding fixed speed and inspects driver if needed. Digital output can be controlled by scenario for user needs, to manage buzzer, LED, etc.

5.4.3 Jamming detection

Jamming detection shows when GSM signal jamming occurs. Digital output can be controlled by scenario for user needs, to manage buzzer, LED, etc.

5.4.4 Trip

Trip customizable feature enables user extended monitoring of performed trips (from engine start at present location to engine stop at arrived location), log their start and stop points, view driven total distance[1] and calculate eco score value.

Odometer calculation source can be selected between GNSS, OBD or LVCAN.

Note: Scenarios and Trip feature are activated (DOUTs are activated) only if ignition is on.

5.4.5 DOUT Control Via Call

Activates DOUT on incoming call

Note: in Excessive Idling, Jamming and Trip scenarios if Eventual Records is enabled Event will be **generated (included into send records) only** when scenario starts and finishes. If Eventual Records is disabled scenario status value is sent in each AVL record.

5.4.6 Immobilizer

Immobilizer Scenario. Vehicle can be used only if iButton is connected. If iButton List Check is enabled gives ability to use vehicle only for 500 specific iButton owners (specified in iButton list). If iButton List Check is disabled connect any iButton to pass Immobilizer security. Digital output can be controlled by scenario for user needs, to manage buzzer, LED, etc.

5.4.7 iButton read notification

This functionality allows user to see when iButton is being readed. Selected DOUT turns on for configured duration.

5.4.8 GPS Fuel Counter

This functionality is meant to calculate fuel consumption based on set consumption values in different situations.

5.5 Accelerometer Features

5.5.1 Excessive Idling

Informs you if your vehicle is stationary but engine is on for selected period of time to help you to save fuel.

---

[1] Continuous trip odometer – total driven distance, works only in TRIP mode. Continues distance is counted only for ONE trip. If trip is finnished (stop point is detected), odometer resets to 0 (zero). Next trip will start counting from the begining. Betwen Records trip odometer – another odometer that are used only in TRIP mode. In this mode distance will be counted until any record is made, then odometer will be reseted to zero and started counting to next record again.

5.5.2 Unplug Detection

Unplug detection scenario generates event when FMB20X is unplugged from external power and plugged into external power.

5.5.3 Towing Detection

Towing detection feature helps to inform driver about car deporting. FMB20X generates event when car is being towed or lifted, for example in case of vehicle evacuation.

5.5.4 Crash Detection

If Crash detection is enabled, it monitors acceleration on each axis, which helps to detect an accident.

If Crash trace is disabled crash detection event will be generated (included into send record) only when scenario starts and finishes.

If Crash trace is enabled FMB20X will collect acceleration data every 40 msec. Buffer is big enough to hold data for 5 seconds and on Crash Event detection, records will be generated from this buffer, following these conditions:

- Every second Acceleration changed more then > 50mG Data will be collected and records generated 5 seconds after the event using the same conditions.
- Every generated record will have accelerometer X Y Z values included.
- Each record will have accurate timestamps in milliseconds.

Note: in Unplug Detection and Towing Detection scenarios if Eventual Records is enabled Event will be **generated (included into send records) only** when scenario starts and finishes. If Eventual Records is disabled scenario status value is sent in each AVL record.

5.6 blue-tooth

blue-tooth can work in two modes - *slave* or *master*.

While working as *master* mode - blue-tooth can connect to defined "*hands free*" or "*OBDII*" system.

While working as *slave* mode - blue-tooth can accept incoming connection from external device.

NOTE: FMB20X supports ONE connection at a time.
NOTE: FMB001 can see up to 10 available devices. If there are more then 10, with each scanning the list may change.

5.7 Auto Geofence

Auto Geofencing feature if enabled is activated automatically by turning off car ignition. Next time before driving user has to disable Auto Geofencing with iButton, digital input, by external voltage or by car Engine RPM. In case of theft car leaves Auto Geofencing zone without authorization FMB20X device automatically sends record to AVL application and SMS (if configurated).

5.8 Manual Geofence

Geofencing is another feature which is highly customizable and can detect wherever car enters or leaves customized areas. More about Geofencing can be read in 5.13 chapter.

5.9 iButton list

iButton list is used to enter authorized iButton ID codes, which are used to authenticate driver in Authorized driving and Auto Geofencing options.

6 CONFIGURATION

6.1 Configurator

FMB20X module has default factory settings. Settings should be changed according to your application and your GSM operator information.

FMB20X configuration may be performed via SMS commands or configurator.

FMB20X has one user editable profile.

It can be configured to acquire and send data to server. If device is not able to send data to server, GSM is not available FMB20X will start storing records to flash memory. It is possible to store up to 192 000 data records with 128 Mb SD memory card (when 100 Mb are used for store records). It will send data later when GPRS is available again. Note that FMB20X can have memory full of records. In such case it will start deleting oldest records in order to save new ones. Sending all data records to server may take some time.

FMB20X configuration is performed via FMB20X Configurator program. Contact sales manager to get the latest FMB20X Configurator version. FMB20X configurator operates on Microsoft Windows OS and uses MS .NET Framework. For Windows XP you will need MS .NET Framework 4 (with MS .NET Framework 4 update KB2468871-v2) for Windows Vista, Windows 7, Windows 8.1, Windows 10 MS .NET Framework 4.6.2 or later. Please ensure that suitable MS .NET Framework version for your OS is installed on your PC before starting configurator. Latest MS .Net Framework version can be downloaded from official Microsoft web page.

Module configuration is performed over USB cable or blue-tooth port. Configuration process starts from starting FMB20X Configurator program and then connecting to FMB20X device via Connect button located in Online menu part. FMB20X has one user editable profile, which can be loaded from device, and saved. User can also revert to default settings, by pressing Reset to defaults button. After any modification of configuration settings it has to be saved to FMB20X device, otherwise it will not be written to device.

Figure 9 FMB20X configurator window when selecting the connection method

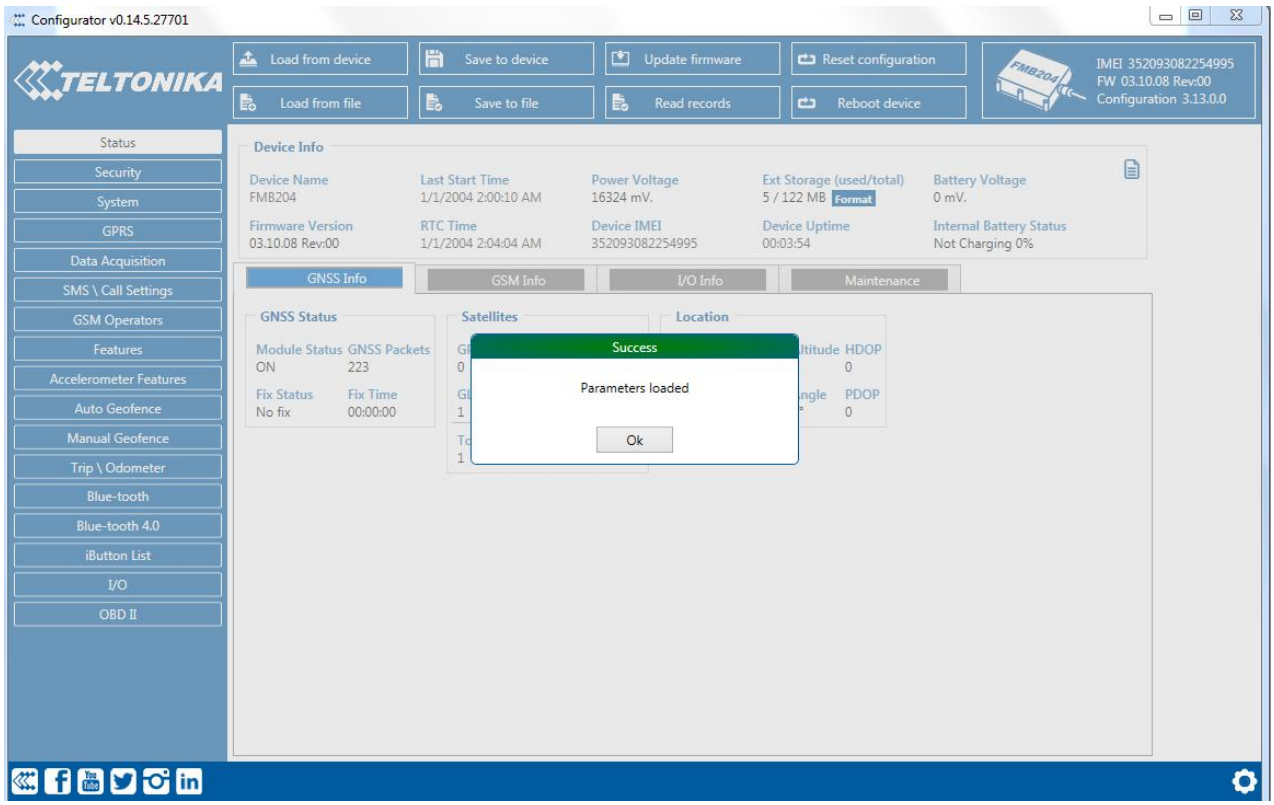

Figure 10 FMB20X configurator main window when connected to it and successfully loaded parameters

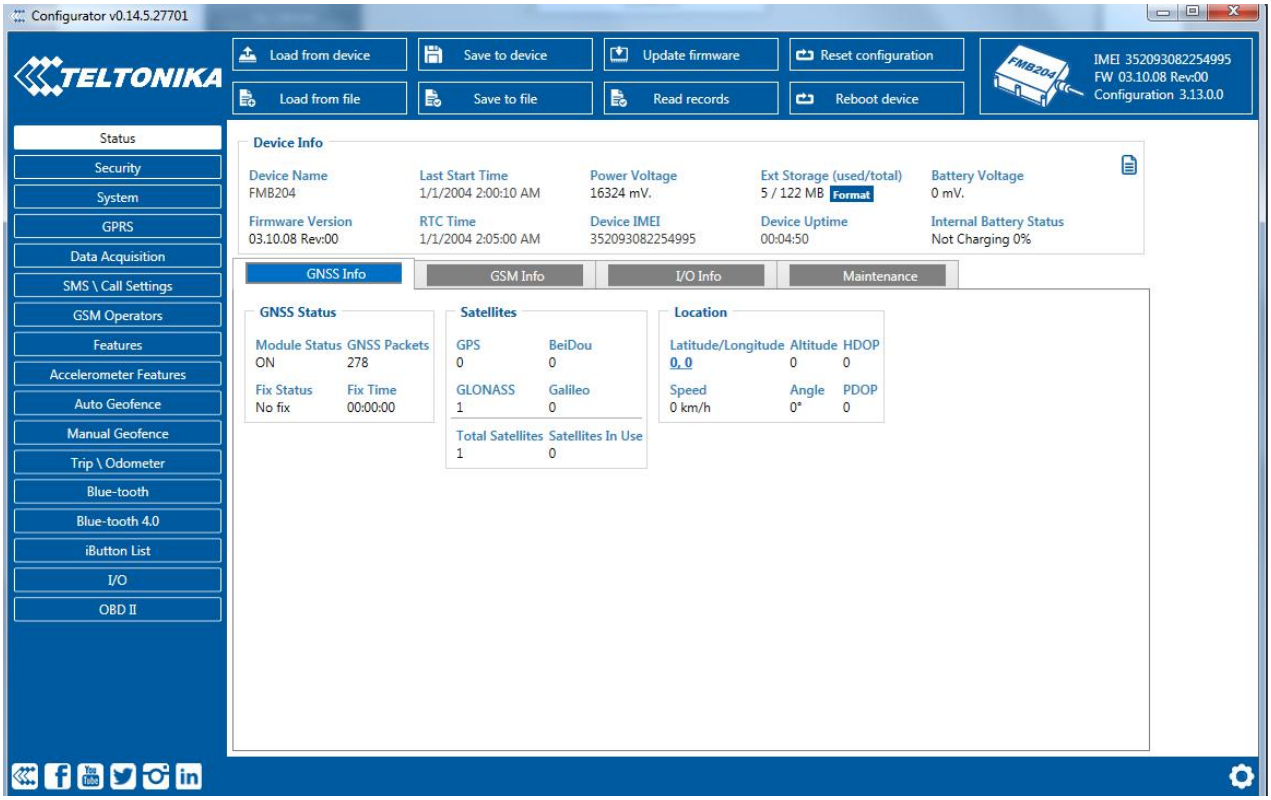

Figure 11 FMB20X configurator status column

6.1.1 Main Buttons description:

'Connect to device' (Figure 9) – connects device.
'Load from device – loads configuration from device.
'Save to device' – save configuration to device.
'Load from file' – load configuration from file.

‘Save to file’ – save configuration to file.
‘Update firmware’ – update firmware on device.
‘Reset device’ – reset device configuration to default.

6.1.2 Keyword SMS (GPRS) commands:

"setkey <oldkeyword> <newkeyword>" - Set new or change the keyword. Configuration should be not locked. Example:

New keyword (set):
<name>{space}<pass>{space}setkey{space}{space}<newkeyword>

Change keyword (change):
<name>{space}<pass>{space}setkey{space}<oldkeyword>{space}<newkeyword>

"delkey <keyword>" - Deletes current keyword. Configuration keyword should be configured and not locked.

Example:
<name>{space}<pass>{space}delkey{space}<keyword>

6.1.3 Keyword configuration with TCP

If configuration has keyword, it will be saved to configuration file.

After TCP configuration: if keyword in configuration file does not match keyword in device, configurator will ask which keyword must be used for device.

If device is locked, keyword cannot be changed with TCP configuration.

6.2 Status info

Status info monitoring FMB20X real time information in 5 different positions: Device info, GNSS info, GSM info, OBD/ CAN adapter info and I/O info. All this information can be saved into .HTML format with a button whitch is in device info table top right corner.

In device info user can see device name, firmware version, last device start time, RTC Time, power voltage (mV), device IMEI, SD card free space, Device uptime, Battery voltage (mV) and internal battery status.

In GNSS info user can see:

- Real time GNSS status information: module status (ON, deep/GPS/Online sleep mode), how much GNSS packets device got from startup, what is fix status and what was last GNSS fix time.
- Satellites information: how many and what type of satellites are visible. How many satellites are used for location positioning.
- Location information: latitude, longitude, altitude, angle, HDOP, PDOP and speed.

In GSM Info user can see:

- GSM status: modem status, SIM status, GPRS status, actual operator code and GSM signal level.
- GPRS traffic: how much data has been send from device and received from device.
- Sockets information: what server domain and port is used.
- Records: how much records were sended to server from last data reset, when last record send to server was and when was last server response.
- SMS count: how much FMB20X received SMS and how much SMS was send from device.

In OBD info user can see main information from OBD (if device connected to vehicle with OBD II blue-tooth dongle adapter): vehicle VIN code and used OBD protocol.

In *CAN Adapter info user can see main information from LV-CAN200/ ALL-CAN300 (if device connected to LV-CAN200/ ALL-CAN300): program number and LV-CAN200/ ALL-CAN300 SW version*

In I/O info user can see all I/O element values from all configurable I/O elements.

6.3 *Security info*

In security section user can see SIM card and configurator keyword security information.

- User can see SIM1 and SIM2 state and now connected to device SIM card current status. If used SIM card with PIN code user can enter it here. How much attempts left to enter pin code is showed to.
- When SIM PIN code is entered correctly user can change PIN code or disable it from SIM card. When SIM PIN is disabled and user what to enable it again user must enter last used PIN code.
- If into device are inserted two SIM cards, user can change PIN code to both of them.
- For configuration security keyword can be set to configurator. Keyword can be saved in configuration file (.cfg), so there is no need to connect the device to the configurator to configure keyword. Min keyword length is 4 symbols and max length is 10 symbols. Only uppercase and lowercase letters and numbers are supported. Keyword can be configured to .cfg configuration file when device is not connected to device.

6.4 *System settings*

System settings have 9 configurable parameters:

- Sleep settings, where user can choose sleep mode;
- Ignition source, where user can choose between power voltage, digital input 1, accelerometer and engine RPM as ignition sources. More than one ignition source can be selected at the same moment. User can select movement start and movement stop delay time (in seconds): those parameters are used when ignition source is accelerometer. Into ignition status take the following functionalities: power manager, eco driving, excessive idling, fuel consumption, over speeding, towing and trip functionalities.
- Object Motion Detection Settings, where user can configure 4 ways how FMB20X will detect stopped movement, and change its working mode (for working modes, read section 5.8). Other functionalities that depend from movement source: power manager, fuel consumption and trip.
- Static navigation settings, where user can turn static navigation on or off. Additional, user can chose from what source (movement or ignition) static navigation can be deactivated/activated;
- Records Settings, where user can enable or disable records when GPS is not available (no time synchronization);
- GNSS source Settings, where user can choose satellite system.
- LED indication, where user can turn on or off indication leds.
- Battery charge mode, where user can choose when battery will be charged: on need (battery will be charged anytime when it need to be charged) and after ignition ON (battery will be charged only when ignition is on).
- Analog Input value range, where user can choose analog input range 10 V or 30 V (10 V range for now works same as 30 V range).
- Time synchronization settings, where user can choose from what source (or sources) FMB20X time will be synchronized. User has choice to use only one synchronization source by GNSS. When selected synchronization from NTP, time will be synchronized from NTP server and from GNSS. When selected synchronization from

NITZ, time will be synchronized from GSM operator and GNSS. When selected synchronization from NITZ+NTP, time will be synchronized from all three sources (if it is necessary). Every time GNSS fix will be acquired time will be synchronizes (if needed). User can select from what NTP server (possible to configure two servers) time will be synchronized and what time period (in hours) is used to resynchronize time.

Table 12. Object Motion Detection Settings

Movement Source	Vehicle on Stop mode	Vehicle Moving mode
Ignition (recommended)	If ignition (ignition source) is logic low	If ignition (ignition source) is logic high
Movement (movement sensor)	Internal movement sensor does not detect movement	Internal movement sensor detects movement
GPS	GPS fix is available and vehicle speed is lower than 5 km/h	GPS fix is available and vehicle speed is higher than 5 km/h
	While GPS fix is unavailable, Object Motion Detection Settings are working like in Msensor mode	
CAN speed	If speed from BT OBDII dongle is equal 0 km/h	If speed from BT OBDII dongle is higher that 0 km/h

Static Navigation Mode is a filter, which filters out track jumps when the object is stationary. If Static navigation filter is disabled, it will apply no changes on GPS data. If Static navigation filter is enabled, it will filter changes in GPS position if no movement (configured movement source) or ignition (configured ignition source) is detected (depends on what static navigation settings is selected: movement, ignition or both sources). It allows filtering GPS jumps when object is parked (is not moving) and GPS position is still traced.

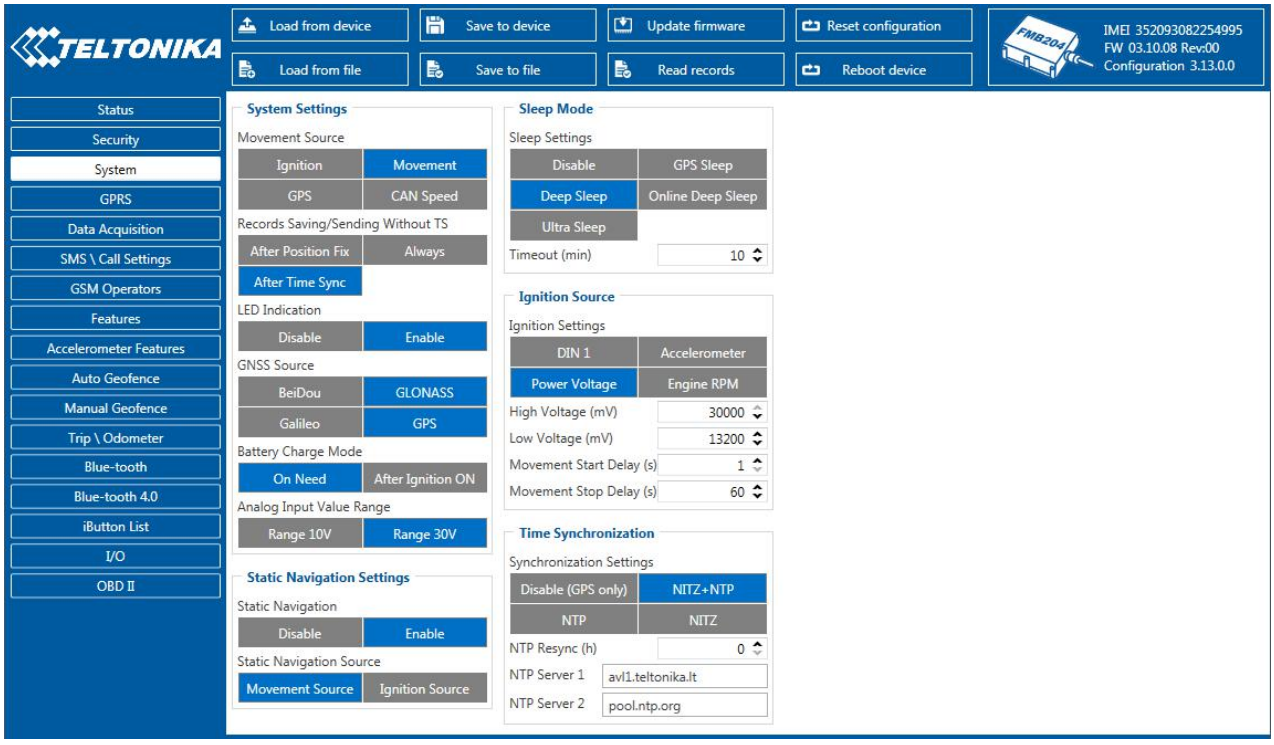

Figure 12 System settings configuration

In GNSS source Settings user can configure which GNSS system or systems to use.

User has choice to use only one system of GPS, Glonass, Galileo or Beidou. Also it is able to choose two or three systems together. One exception is that you can not combine Beidou and Glonass systems together.

List of configurable GNSS sources:

Beidou only	ID:01
Glonass only	ID:02
Galileo only	ID:04
Galileo+Beidou	ID:05
Galileo+Glonass	ID:06
GPS only	ID:08
GPS+Beidou	ID:09
GPS+Glonass	ID:10
GPS+Galileo	ID:12
GPS+Galileo+Beidou	ID:13
GPS+Galileo+Glonass	ID:14

Example of good configuration

List of **NON**–configurable GNSS sources:
Glonass+Beidou
Galileo+Glonass+Beidou
GPS+Glonass+Beidou
GPS+Galileo+Glonass+Beidou

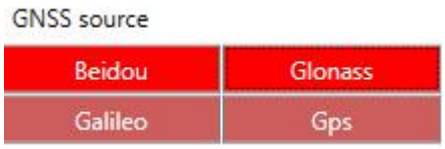

Example of bad configuration

6.5 GPRS

'GPRS' defines main parameters for FMB20X: GSM operator APN and GPRS username and password (optional – depending on operator), destination server IP and port, and allows to set protocol used for data transfers – TCP or UDP. SIM1 and SIM2 GPRS settings can be configured separate. Also all server setting and backup server mode can be selected for backup server configuration.

Backup server has 3 different modes:

- Disable: backup server is not used.
- Backup: send to backup server if main server not available (Failed to open Link) or, main server response timeout is detected 5 times in row.
- Duplicate: send records to both servers (main and backup), delete record from sd card (or RAMS) only if both servers accepted records.

Some operators use specific authentication for GPRS session – CHAP or PAP. If any of these is used, APN should be entered as '`chap:<APN>`' or '`pap:<APN>`'. I.e. if operator is using APN 'internet' with CHAP authentication, it should be entered as '`chap:internet`'. Information about APN and authentication type should be provided by your GSM operator.

Records settings. Here user can modify if FMB20X device will send newest records first, meaning, that the most important thing is to know recent position of car, older records are being sent right after newest records arrive to AVL application.

Activate Data Link Timeout is used to set timeout of link between FMB20X and AVL application termination. If FMB20X has already sent all records it waits for new records before closing link (except Deep Sleep mode, more indoemation in Deep Sleep mode chapter). If new records are generated in the period of this timeout, and minimum count to send is reached, they are sent to AVL application. This option is useful when GSM operator charge for link activation.

Server Response Timeout is used to set time period waiting for response from server side.

FOTA WEB settings are used for FOTA WEB server connection parameters configuration. Status enables or disables FOTA WEB funkcionality. In domain and port user can enter address and port number of FOTA website. Period is used fot timeout of reapeating connection to FOTA WEB server.

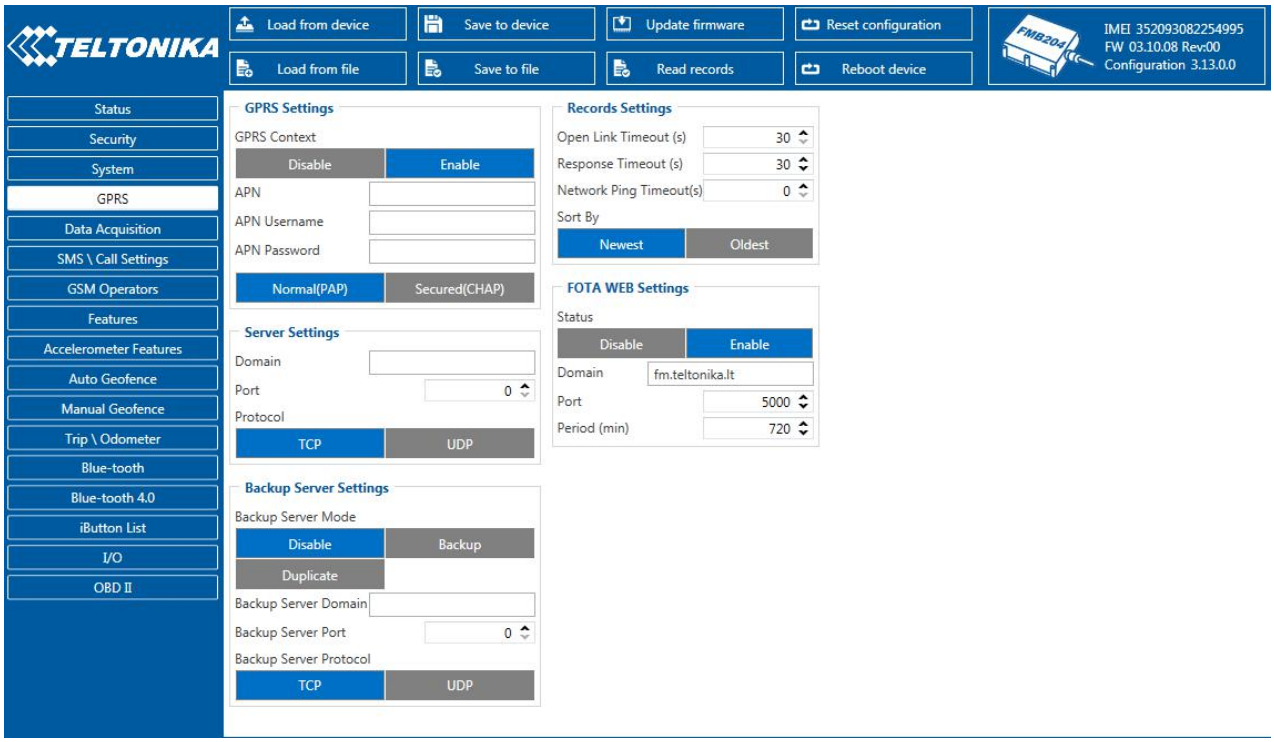

Figure 13 GPRS configuration

6.6 SMS/Call Settings

Essential fields in 'SMS' part is 'Login' and 'Password'. The login and password are used with every SMS sent to FMB20X. If login and password are not set, in every SMS sent to FMB20X device two spaces before command have to be used (<space><space><command>).

Command structure with set login and password:

<login><space><password><space><command>, example: "asd 123 getgps"

Phone numbers have to be written in international standard, with using "+" or without using it (in both cases number will be recognized, but when number is without "+" symbol, it will not generate IDD Prefix, which depends on location of phone). If no numbers are entered, configuration and sending commands over SMS are allowed from all GSM numbers.

SMS data sending settings allows or does not allow sending AVL data using binary SMS. AVL data will be send by SMS only when there are no GPRS connection. This setting does not affect replies to SMS request messages – answers are always sent back to sender telephone number.

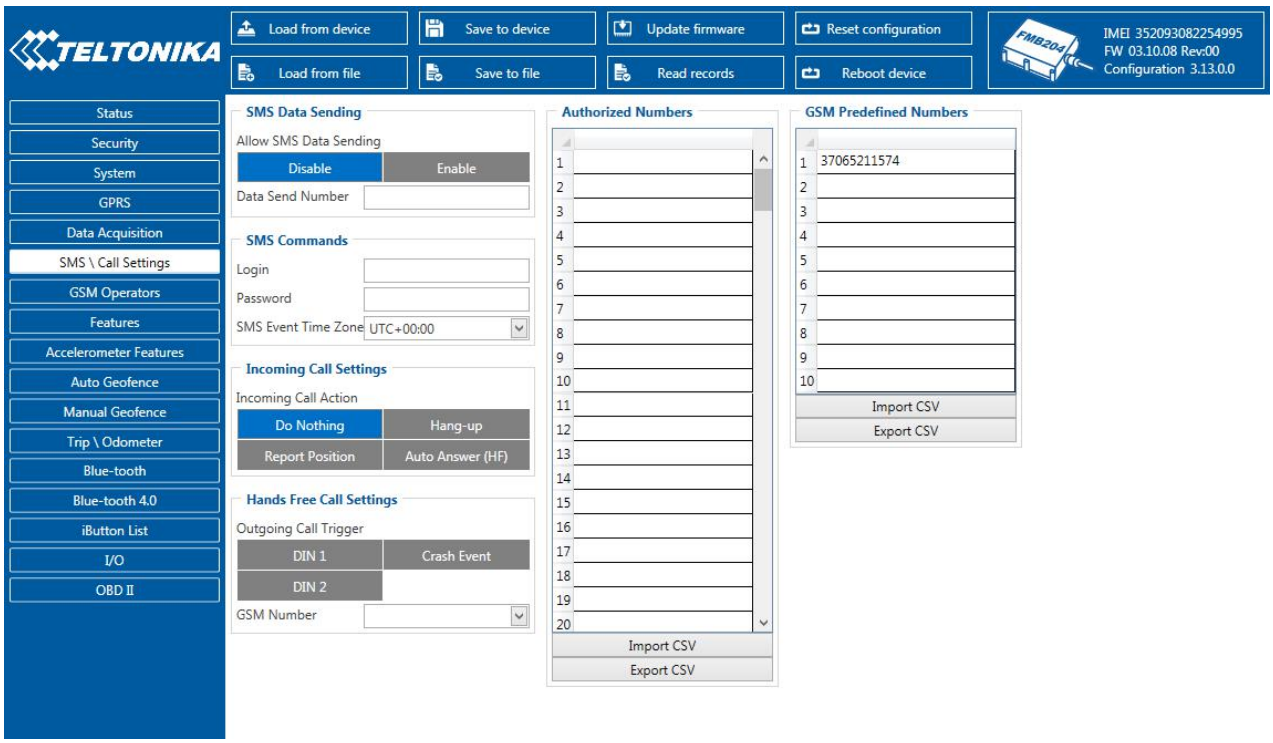

Figure 14 SMS \ call Settings configuration

Incoming Call Settings

This parameter defines device action during incoming call:

- Do Nothing
- Hang up – automatically hang up incoming call
- Report Position – Report position to calling number via SMS
- Auto Answer (HF) – Auto answer incoming call if hands free device is connected. If hands free device is not connected, then incoming call will be hanged up.

Hands free call functionality

When FMB20X is connected to hands free headset it can call to user defined GSM numbers.

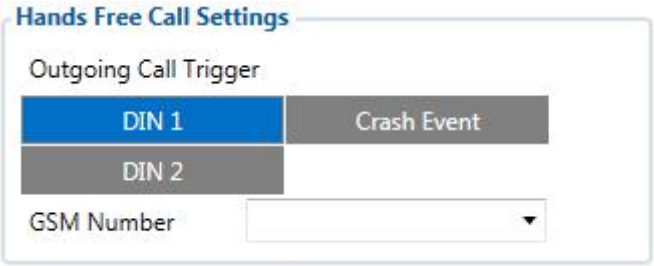

Figure 15 Hands Free Call Settings configuration for FMB20X

Outgoing Call Trigger parameter determines which event will triggers call. FMB20X supports first for different call triggers and FMB20X supports all eight call triggers:

- None selected – disables call trigger functionality.
- DIN1 – first digital input event triggers call to user selected GSM number.
- Crash Event – crash event triggers call to user selected GSM number.
- DIN1 and Crash Event – both events triggers call to user selected GSM number.

- DIN2 – seconf digital input event triggers call to user selected GSM number.
- DIN1 and DIN2 Event – both events triggers call to user selected GSM number.
- DIN2 and Crash Event – both events triggers call to user selected GSM number.
- DIN1, DIN2 and Crash Event – all events triggers call to user selected GSM number.

SMS Event Time Zones

FMB20X works with synchronized GPS time which is UTC+0, with this option customer can configurate his time zone and get SMS with correct time.

Note: Please do not set Data Send Number to some cell phone number, because it will not understand binary SMS. When sending a binary SMS to a phone number, which is a server phone number, the server can interpret and understand binary code, so the data can be read and you can view it on the server.

SMS login and password and authorized number list are used to protect FMB20X module from unauthorized access. Module accepts messages only from a list of authorized numbers and with proper module login and password. Phone numbers have to be written in international standard, with using "+" or without using it (in both cases number will be recognized). If no authorized numbers are entered, module accepts messages from all numbers.

6.7 GSM Operators, SIM1 Roaming and SIM2 Roaming/ Home Operator list, Blacklist Operator list

Operators list – FMB20X can work in different modes (use different settings) according to the operator list defined. Operator list is used for Data Acquisition Mode switching (see Data Acquisition Mode settings chapter for more details). Modes are changed based on GSM operator FMB20X is connected to.

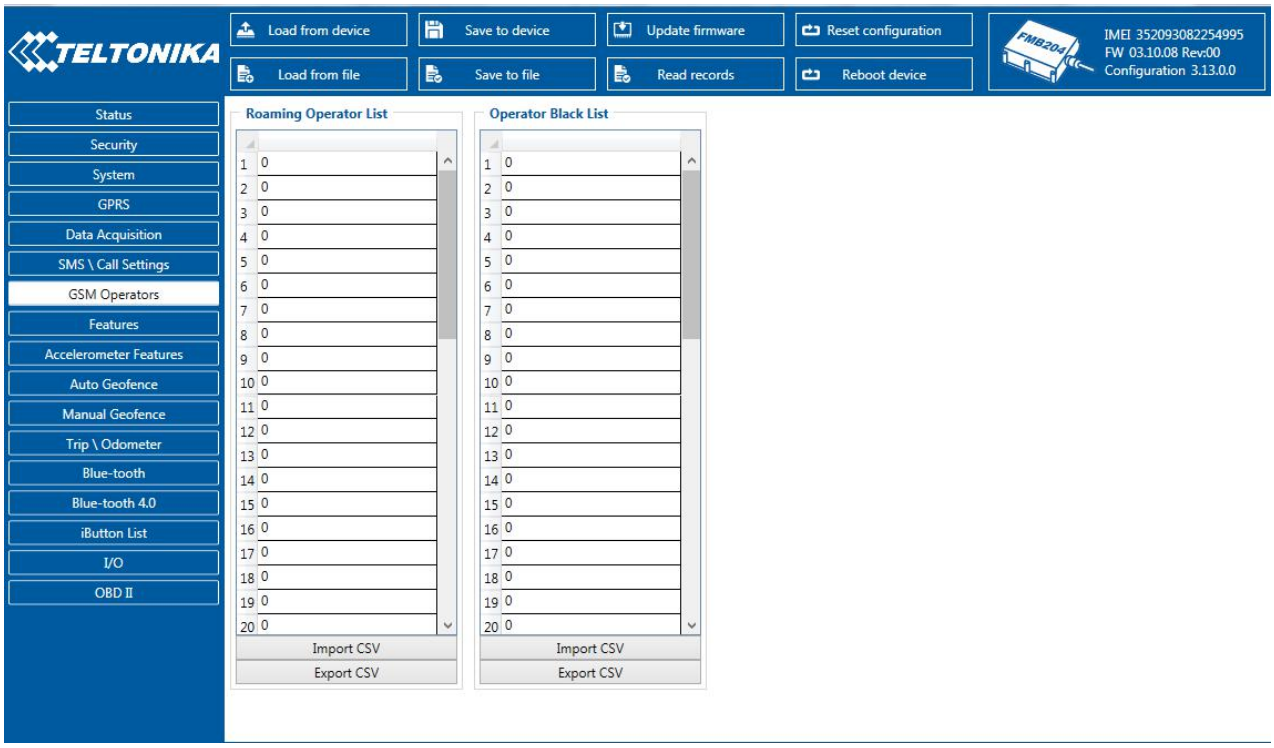

Figure 16 SIM1 Roaming, SIM2 Roaming/ home Operators and Operator BlackList configuration

If roaming operator list is left empty, FMB20X will automatically detect home operator. If home operator will be written to roaming operator list any part, it will be detected as home operator, not roaming. Any not written operator in roaming operator list (not home operator) will be recognized as unknown operator and FMB20X will work in **Unknown mode** (make sure it is configured to allow data sending – GPRS context is enabled).

Operator Blacklist - if user wants that FMB20X do not connect and work with a particular operator it must be written to Operator BlackList. Total 50 operators can be written to this list.

Operator Blacklist working: operator search procedure is initiated as normal every 15 minutes and tries to connect to an operator with the strongest signal. It will prioritize operators which are specified in the operator list. If no operators from the operator list are available, the device will try to connect to an operator from the blacklist. If device connects to operator from black list – best operator search procedure is initiated instantly. During the time when device is connected to Black list operator - no GPRS connection would be initiated and no data would be send via GPRS. The ability to send SMS commands to the device remains. If no suitable operator is found on both lists, the device will try to connect to a remaining available operator with the strongest signal.

In SIM2 Roaming/ Home Operator list home operator must be added to the any part of the list that functionality works correctly.

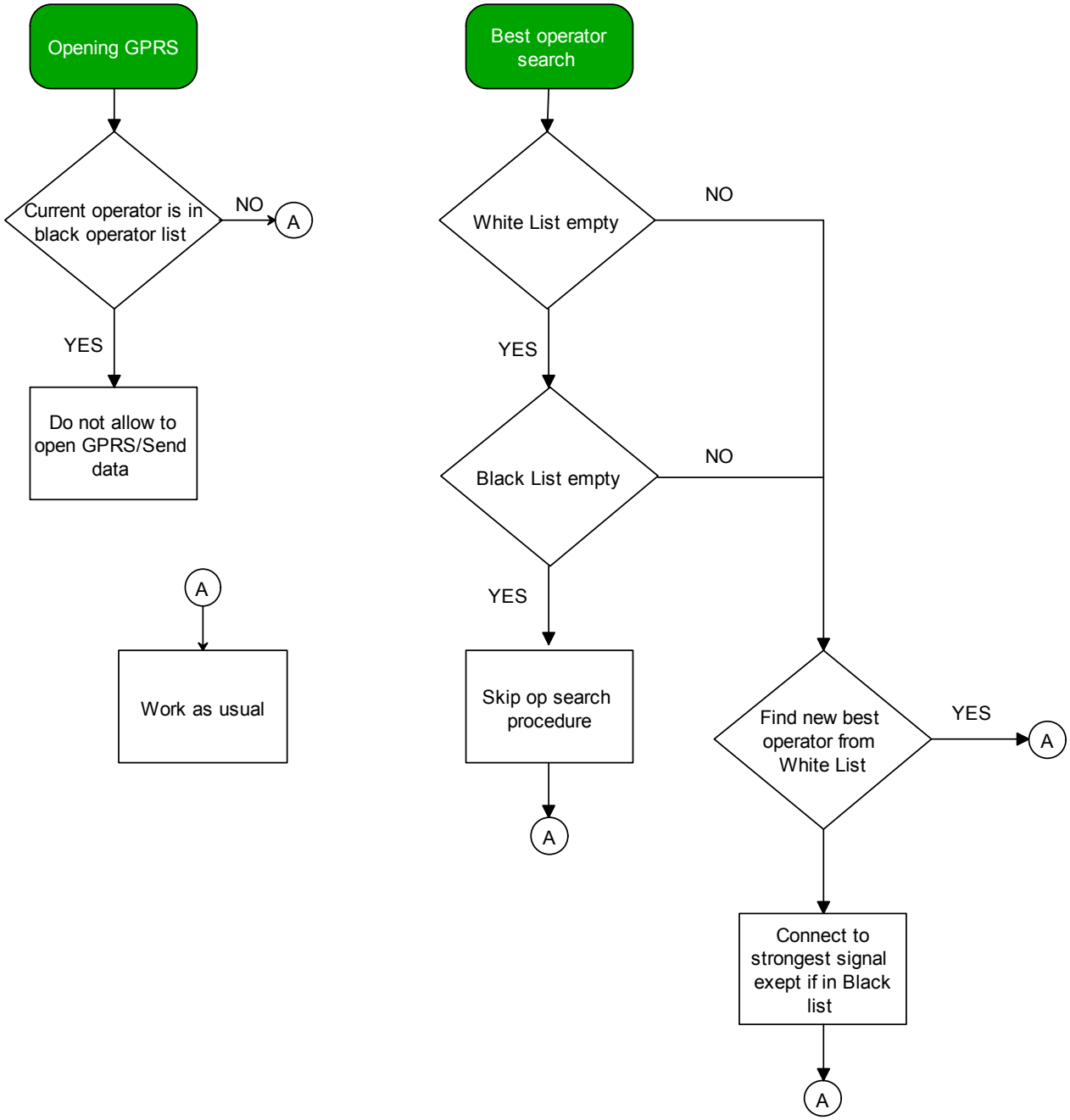

Figure 17 Operator search functionality diagram. White list is SIM1 Roaming and SIM2 Roaming/ Home Operator lists.

6.7.1 Dual SIM

FMB20X have possibility to have inserted in them two SIM cards. GPRS settings and Roaming Operators can be configurd separate for SIM1 and SIM2. In SIM2 Roaming/ Home operator list home operator must be added to the any part of the list that functionality works correctly. Dual SIM operator search functionality works like that: SIM1 and SIM2 home operators have highest priority: When device is connected to home operator - manual roaming operator search is disabled. When device is disconnected from home operator - operator search procedure is initiated as normal every 15 minutes. SIM1 Roaming operators list has higher priority then SIM2 Roaming Operator list. When device finds new operator from SIM1/SIM2 lists – it switches to new SIM according to list and connects to new operator.

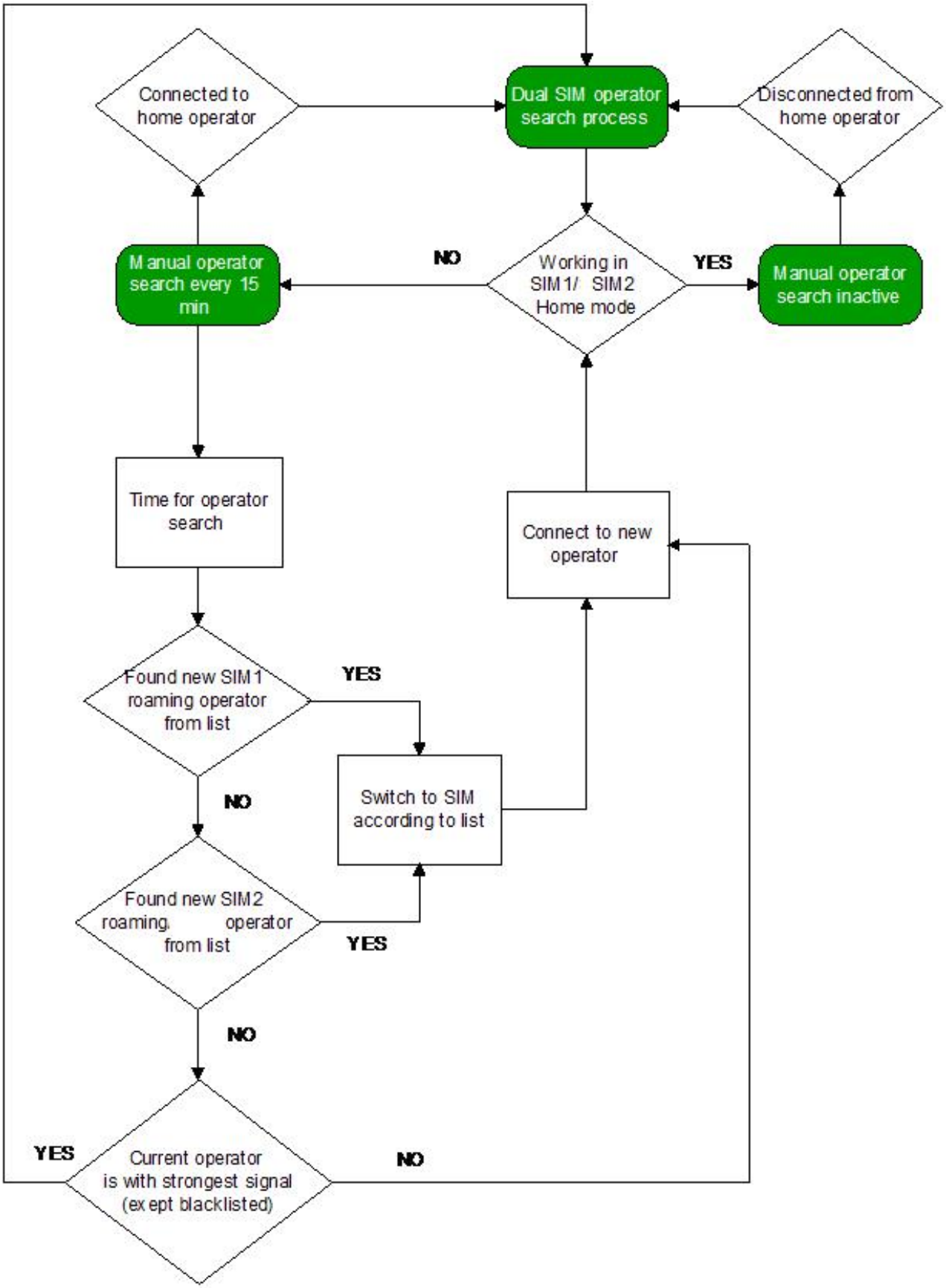

Figure 18 Dual SIM functionality diagram.

6.8 Data Acquisition Mode settings

Data Acquisition Modes are an essential part of FMB20X device, it is also highly configurable.

By configuration user defines how records will be saved and sent. There are three different modes: Home, Roaming and Unknown. All these modes with configured data acquisition and send frequencies depend on current GSM Operator defined in Operator list (see chapter GSM Operators, Roaming and Blacklist Operator list) and are switched when GSM operator changes (e.g. vehicle passes through country boarder).

If current GSM operator is defined as Home Operator, device will work in Home Data Acquisition mode, if current operator is defined as Roaming Operator, device will work in Roaming Data Acquisition mode, and if current operator code is not written in Roaming Operator list, device will work in Unknown Acquisition mode.

This functionality allows having different AVL records acquire and send parameters values when object is moving or stands still. Vehicle moving or stop state is defined by Stop Detection Source parameter. There are 4 ways for FMB20X to switch between Vehicle on Stop and Vehicle Moving modes, see section 5.4 , Table 12. Object Motion Detection Settings.

FMB20X has 6 different modes. Operational logic is shown in Figure 19.

If home operator will be written to roaming operator list any part, it will be detected as home operator, not roaming.

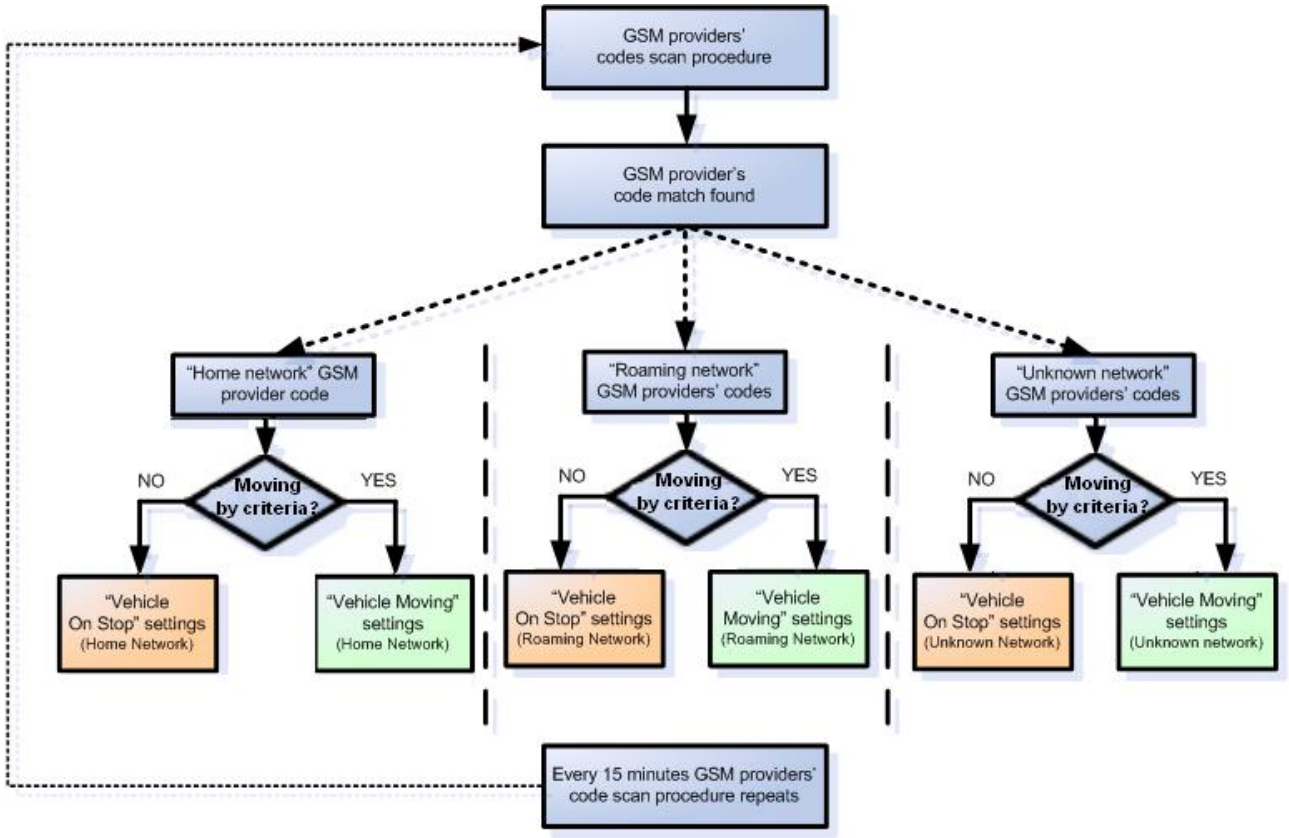

Figure 19 Data Acquisition Mode operational logic

Operator search is performed every 15 minutes. Depending on current GSM operator, Home, Roaming or Unknown mode can be changed faster than every 15 minutes. This process is separate from operator search. Movement criteria are checked every second.

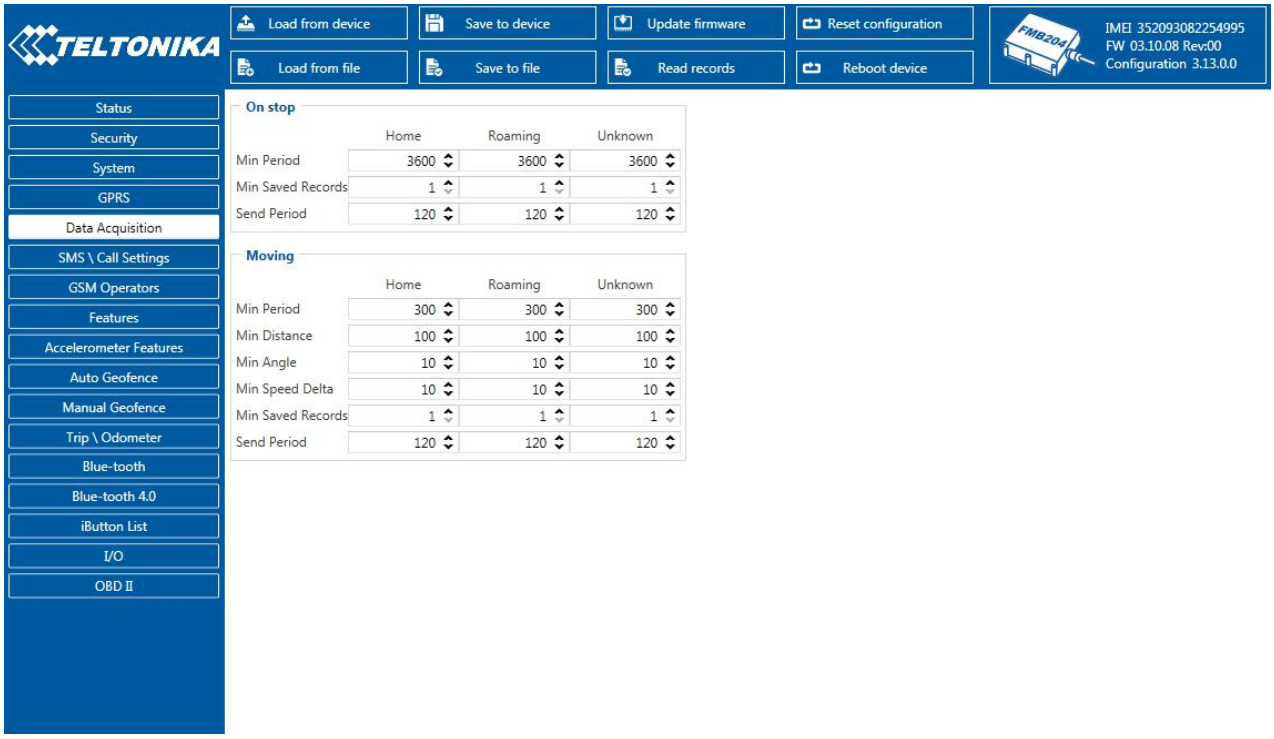

Figure 20 Data Acquisition Mode configuration

'Min Saved Records' defines minimum number of coordinates and I/O data that should be transferred with one connection to server. If FMB20X does not have enough coordinates to send to server, it will check again after time interval defined in 'Sending Period'.

Send period – GPRS data sending to server period. Module makes attempts to send collected data to server every defined period. If it does not have enough records (depends on parameter Min. Saved Records described above), it tries again after defined time interval.

Note: Keep in mind that FMB20X operates in **GMT:0** time zone, without daylight saving.

FMB20X is able to collect records using four methods at the same time: time, distance, angle and speed based data acquisition:
Time based data acquiring (Min. period) – records are being acquired every time when defined interval of time passes. Entering zero disables data acquisition depending on time.

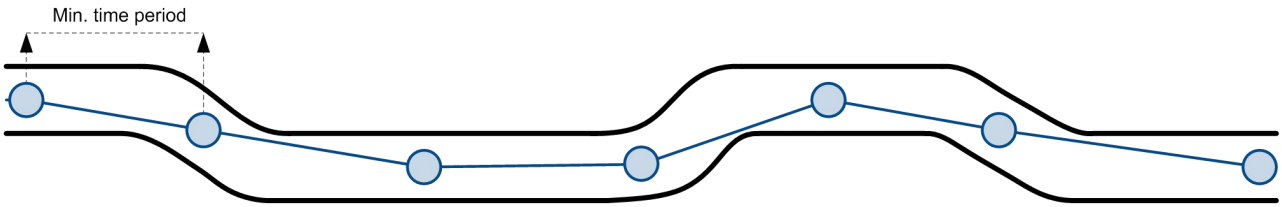

Distance based data acquiring (Min. distance) – records are being acquired when the distance between previous coordinate and current position is greater than defined parameter value. Entering zero disables data acquisition depending on distance.

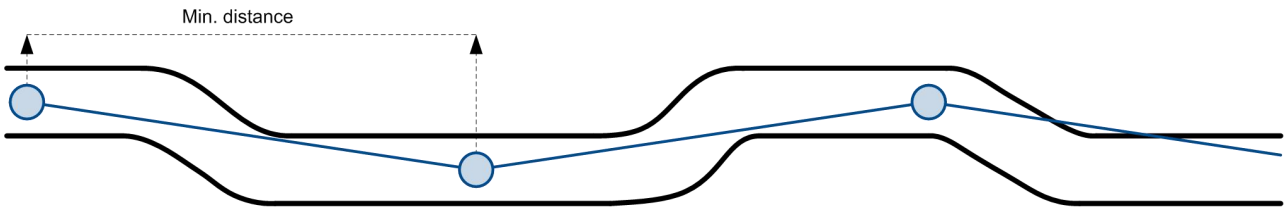

Angle based data acquiring (Min. angle) – records are being acquired when angle difference between last recorded coordinate and current position is greater than defined value. Entering zero disables data acquisition depending on angle.

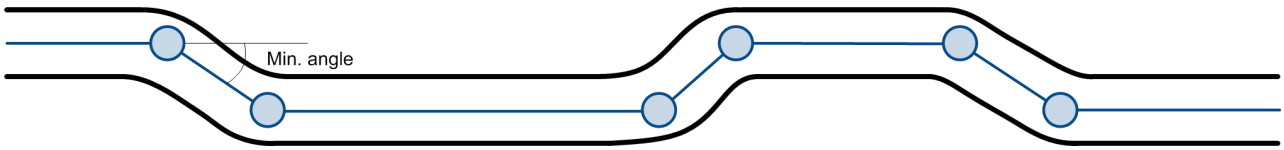

Speed based data acquiring (Min. Speed Delta) – records are being acquired when speed difference between last recorded coordinate and current position is greater than defined value. Entering zero disables data acquisition depending on speed.

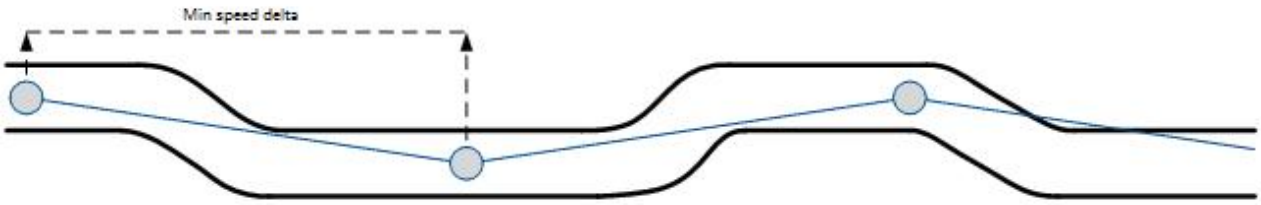

6.9 Features settings

In Features window five different scenarios and GPS fuel counter are available.

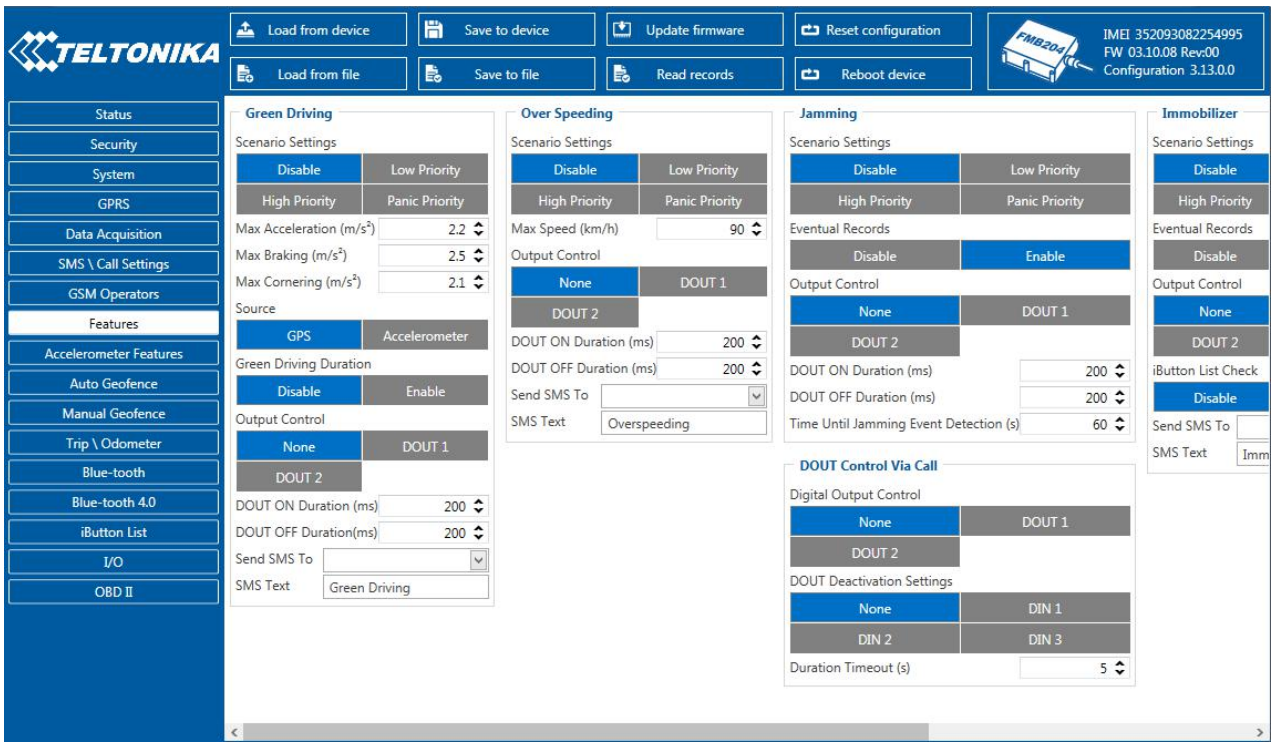

Figure 21 Scenarios configuration

6.9.1 Green Driving

When vehicle exceeds on of Max Acceleration, Max Braking or Max Cornering parameters value, scenario is activated, record will be generated and digital output status will be changed to 1 (if configured). You can configure all three parameters in m/s² (meter per second squered) units. Scenario is activated until current Acceleration, Braking or Cornering value decreases below parameter value.

Parameters used with Green Driving functionality.

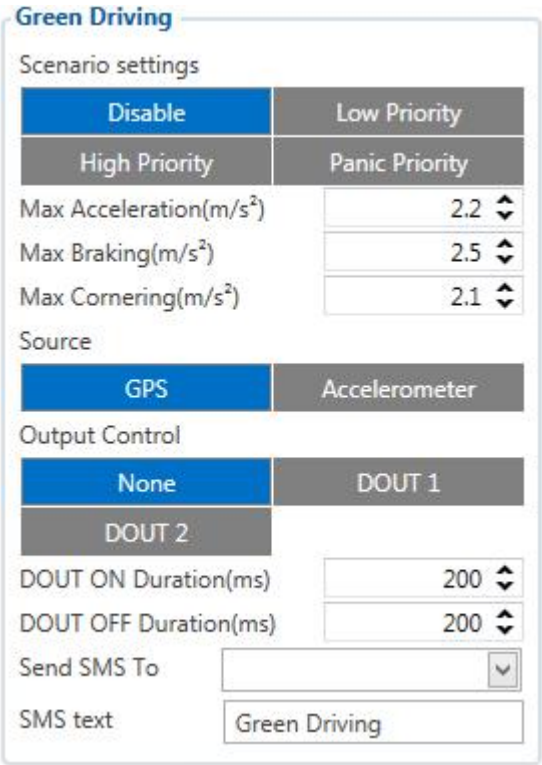

Figure 22 Green Driving configuration parameters for FMB20X

Table 13. Green driving parameters description

Green driving configuration parameter name	Description
Scenario settings	Enable/Disable Green driving functionality.

Max Acceleration Force	Value which can be reached while accelerating without triggering harsh acceleration event.
Max Braking Force	Value which can be reached while braking without triggering harsh braking event.
Max Cornering Force	Value which can be reached while cornering without triggering harsh cornering event.
Source	From what source (GPS or accelerometer) data will be collected.

6.9.1.1 Data output

Green driving functionality generates events on three cases. If vehicles:

- Acceleration exceeds defined parameter value
- Deceleration (braking) exceeds defined value
- Cornering force exceeds defined value

Program continously monitors and process data from accelerometer/GPS than decides whether harsh event is detected or not. If any of three cases are satisfied event is generated. Record is saved and sent to server (FMB20X must be configured properly). Event value is multiplied by 10 before sending/saving record to get more precision when displaying **data***.

Digital output 1 or digital output 2 can be activated for a period of time to warn driver. Output on-time should/can be configured separately for each feature case.

***Example.** If acceleration harsh event of 3.55 m/s2 detected. Record with value 3.55*10 = 35.5 ≈ 36 will be saved ant sent to server.

6.9.1.2 Auto Calibaration

1. Vehicle stopped
2. Road is straight
3. Send SMS "auto_calibrate:set"
4. Accelerate to > 30 km/h for 5 sec.
5. FMB will send response when calibration is success.

Calibration is saved to Internal Flash, after restart should be the same

To check autocalibration status send: auto_calibrate:get

6.9.2 Over Speeding

When vecicle speed exeeds configured max speed value scenario is activated, record will be generated and digital output status will be changed to 1 (if configured).

Scenario is activated until current speed decreases below parameter value.

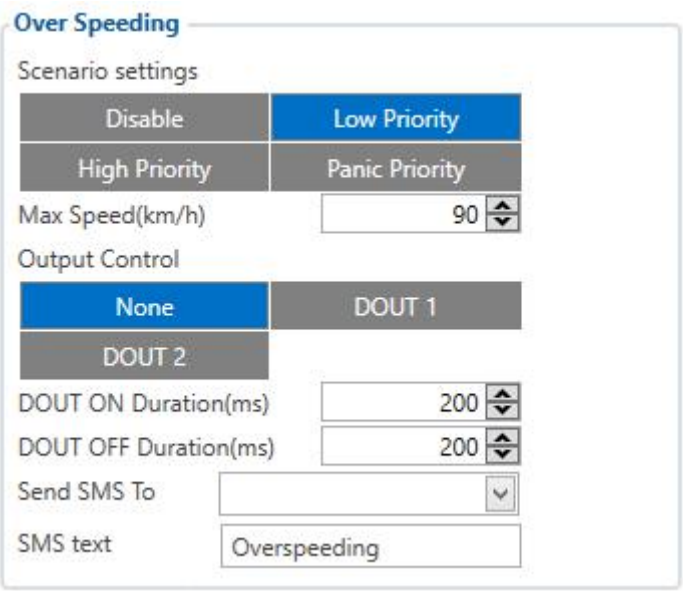

Figure 23 Over Speeding configuration parameters for FMB20X

6.9.3 Jamming

When jamming is detected scenario is activated, record will be generated and digital output status will be changed to 1 (if configured).

Jamming timeout time can be configures. After Jamming trigger count configured timeout (in seconds), digital output control and jamming event will be generated after this timeout. If Jamming ends during timeout counting no event will be generated and output will not be controlled.

You can configure eventual records parameter: when he is disabled scenario status value will be appeared in each AVL record, and when he is enabled scenario status value will be appended only to eventual records.

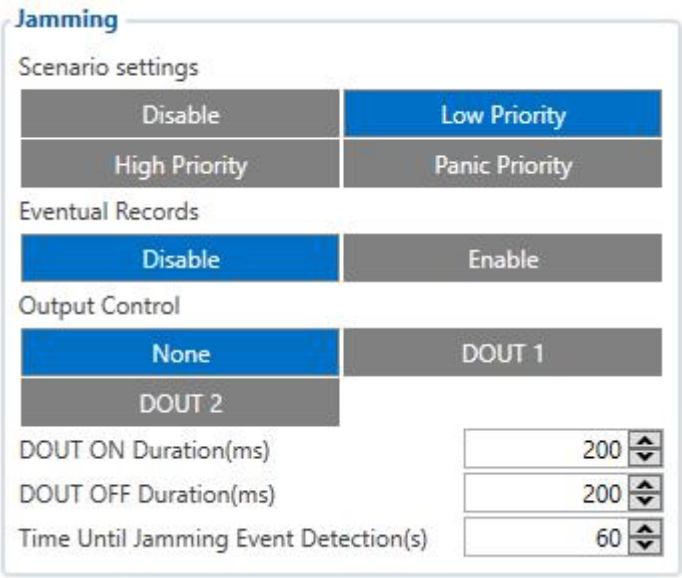

Figure 24 Jamming configuration parameters for FMB20X

6.9.4 Use authorized numbers to control DOUT via call

Scenario is activated and digital output is ON, when call is received from number which is in authorized numbers list.

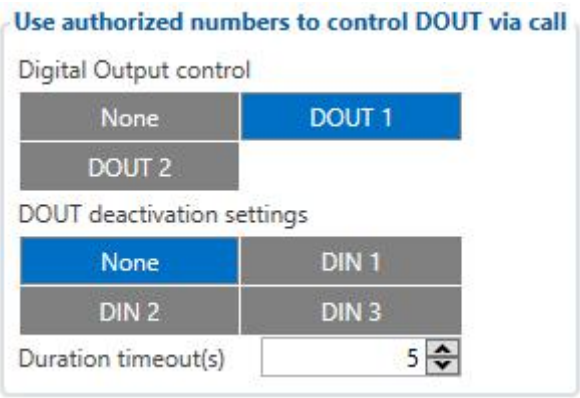

Figure 25 DOUT control via call configuration parameters for FMB20X

Call control functionality:

- When FMB20X is configured to control *DOUT1/DOUT2* device waits incoming call from configured secure number. If call is received FMB20X turns on *DOUT1/DOUT2* for user defined *Duration timeout (s)*. If *Duration timeout* set to „0“(s), *DOUT1/DOUT2* will be OFF.
- *DOUT1/ DOUT2* can be turned off by *Duration timeout (s)* or by *digital input* 1, *digital input* 2 or *digital input* 3 (*DOUT deactivation settings*).
- *DOUT1/DOUT2* can be turned off before *Duration timeout (s)* by selected *DIN* (*DOUT deactivation settings*).
- *DOUT1/DOUT2* always will be ON, if *DOUT deactivation* set to *DIN1* for example, but *DIN1* will be never turned ON or set *Duration timeout* to *Max* value (2147483647) it is about 68 years.
-

6.9.5 Immobilizer

If *Dout Control* is disabled, scenario will only generate events without digital output activation. If *Dout Control* is enabled DOUT1/DOUT2 (optional) turns ON if Ignition turns ON (configured Ignition Source =1). After iButton ID is read (any iButton is attached), DOUT1/DOUT2 turns OFF. After iButton identification, Ignition (configured Ignition Source) can be turned OFF (configured Ignition Source =0) for no longer than 30 seconds, otherwise immobilizer must be repeated. If iButton list checking parameter is enabled, authorization will be successful only if attached iButton is specified in the iButton list.

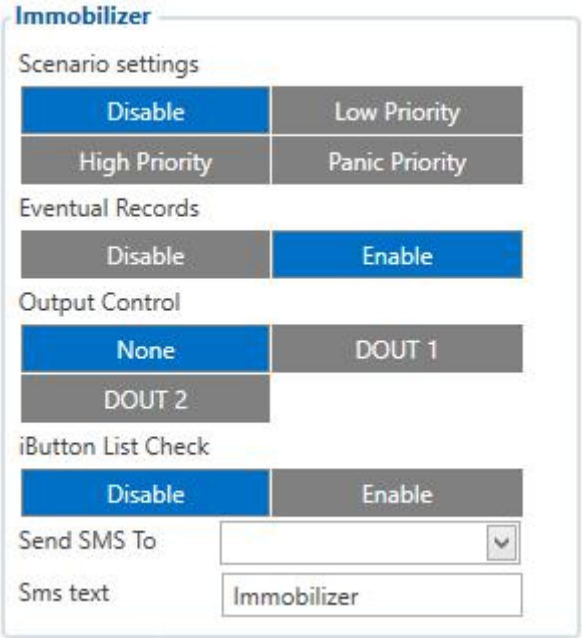

Figure 26 Immobilizer configuration parameters for FMB20X

6.9.6 iButton read notification

This functionality allows user to see when iButton is being readed. Selected DOUT turns on for configured duration, after DOUT ON duration ends configured DOUT don't turns on, even if iButton is left attached.

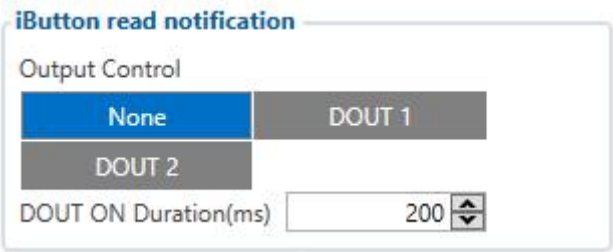

Figure 27 iButton read notification configuration parameters for FMB20X

6.9.7 GPS Fuel Counter

Configuration of Fuel Consumption

1. To configure this parameters use fuel consumption norm which are presented in your car technical documentation. By default speeds for this fuel consumption norms are: City – 30 km/h, Average - 60km/h, Highway - 90 km/h. If you want, you can change it.
2. When speed are higher than highway fuel consumption speed, we add for highway fuel consumption *x* % of highway fuel consumption every *y* km/h, by default FMB20X add 20% every 50 km/h. It means that fuel consumption is (1.2 * Highway Fuel Consumption) on 140 km/h speed, (1.4 * Highway Fuel Consumption) on 190 km/h speed.
3. Correction coefficient is use for correction every value of fuel consumption which is send to server (Used Fuel * Correction coefficient). By default it is 1, min 0.01 and max 2. For example when correction coefficient is 1 and FMB20X calculate that used fuel of 35 m distance is 20 ml, to server will be sent value: 20 ml, if correction coefficient is 1.2 to server will be sent value: 20 * 1.2 = 24 ml.
4. Fuel consumption on idling used to calculate fuel consumption when ignition is on, but vehicle speed is 0 km/h. By default it is 1 l/h, min 0 and max 5 l/h. Almost in all diesel cars this parameter is less than 1.0 l/h. In gasoline cars this parameter is about 1.5 – 2.0 l/h.

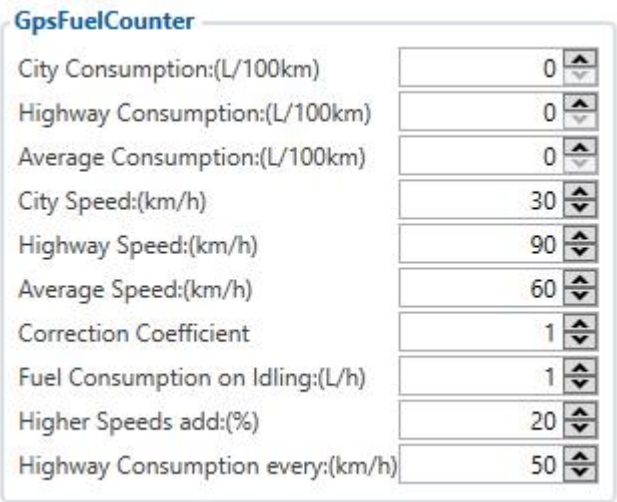

Figure 28 GPS Fuel Counter configuration

6.10 Accelerometer Features

6.10.1 Excessive Idling

When vehicle stops for specific amount of time scenario is activated, record will be generated and digital output status will be changed to 1 (if configured). You can configure time it takes to turn on this scenario (Time to Stopped). Scenario is activated until vehicle starts moving and keeps moving (moving is detected only from accelerometer) for amount of time that is configured. You can configure time it takes to turn OFF this scenario (Time to Stopped).

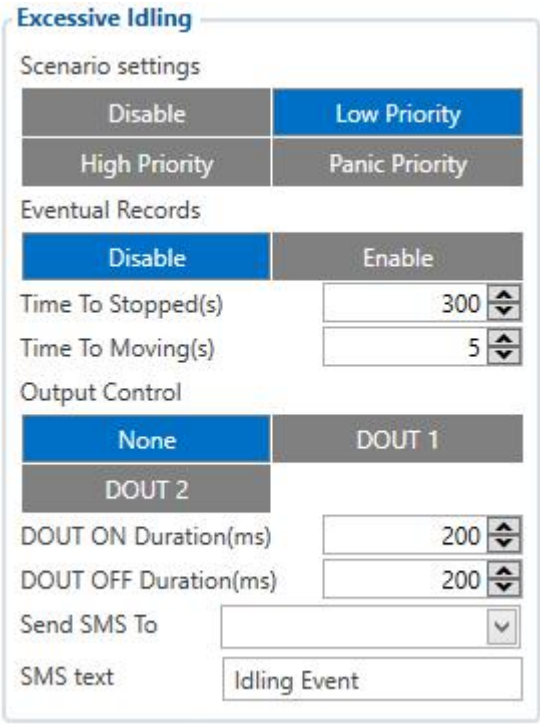

Figure 29 Exccessive Idling configuration parameters for FMB20X

6.10.2 Unplug Detection

Unplug Detection. Eventual event will be generated when FMB20X is unplugged from external power or plugged back again. User can select detection type: simple – used in cars, where power voltage is not dependant on ignition (recommended); advanced – used in cars, where power voltage is disconnected when ignition is switched off.

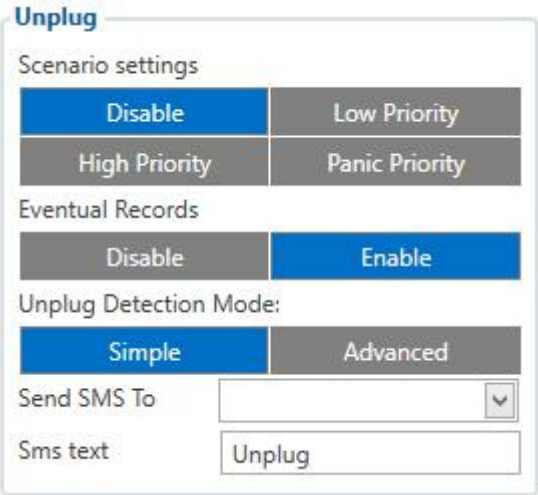

Figure 30 Unplug detection configuration

6.10.3 Towing Detection

FMB2YX activates towing function when these conditions are met:

1. Ignition (configured Ignition Source) is OFF.
2. Activation Timeout (set in Towing detection features) is reached.

When Activation Timeout is reached and Ignition is still in OFF state, FMB20X monitors accelerometer data. If Acceleration or Angle value reaches configured threshold for configured Duration (in ms), check Ignition state. If Ignition is still OFF during configured "Ignition check after Event Timeout" time, then event is generated. If configured - sends sms event or makes a call. Function will be reactivated after FMB2YX again detects change of Ignition state from ON to OFF.

Activation timeout – Activation timeout is time after which FMB2YX turns ON Towing detection function if other requirement is met (Ignition OFF state detected). It is measured in minutes.

Event timeout – defines time period (in seconds) to check ignition state when Acceleration or Angle value reach. If towing event is generated during this time period, it is skipped. It allows filtering out redundant towing events while entering the car.

Make Call to – if function enabled makes call to specified phone number (configured in predefined numbers).

Threshold and Angle – values used to detect towing when ignition is OFF.

Duration – defines time period to check acceleration and Angle values.

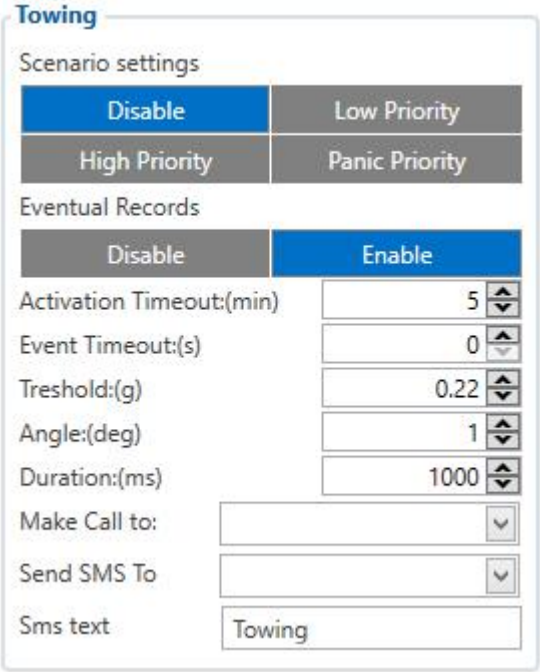

Figure 19 Towing detection configuration

6.10.4 Crash Detection

Crash Detection functionality can be set according to these settings:

1. Threshold (mg)
2. Duration (ms)

If accident happens and FMB2YX detects acceleration value higher than set threshold value during set time period, then device will generate an event. Threshold and duration values are set depending of accident power which you want to detect. FMB2YX can detect a slight tapping on the device (Threshold=100mg, Duration=1ms) or can detect severe accident (Threshold=4000mg, Duration=5ms).

Crash Trace operation:

If trace is enabled FMB will collect acceleration data every 40 msec., and in the deep-sleep mode too. Buffer is big enough to hold data for 5 seconds and on Crash Event detection, records will be generated from this buffer, following these conditions:

1. Every second Acceleration changed more then > 50mG.
2. Data will be collected and records generated 5 seconds after the event using the same conditions.
3. Every generated record will have accelerometer x y z values included.
4. Each record will have accurate timestamps in milliseconds.

Usually between 20 to 30 records is generated on crash event detection.

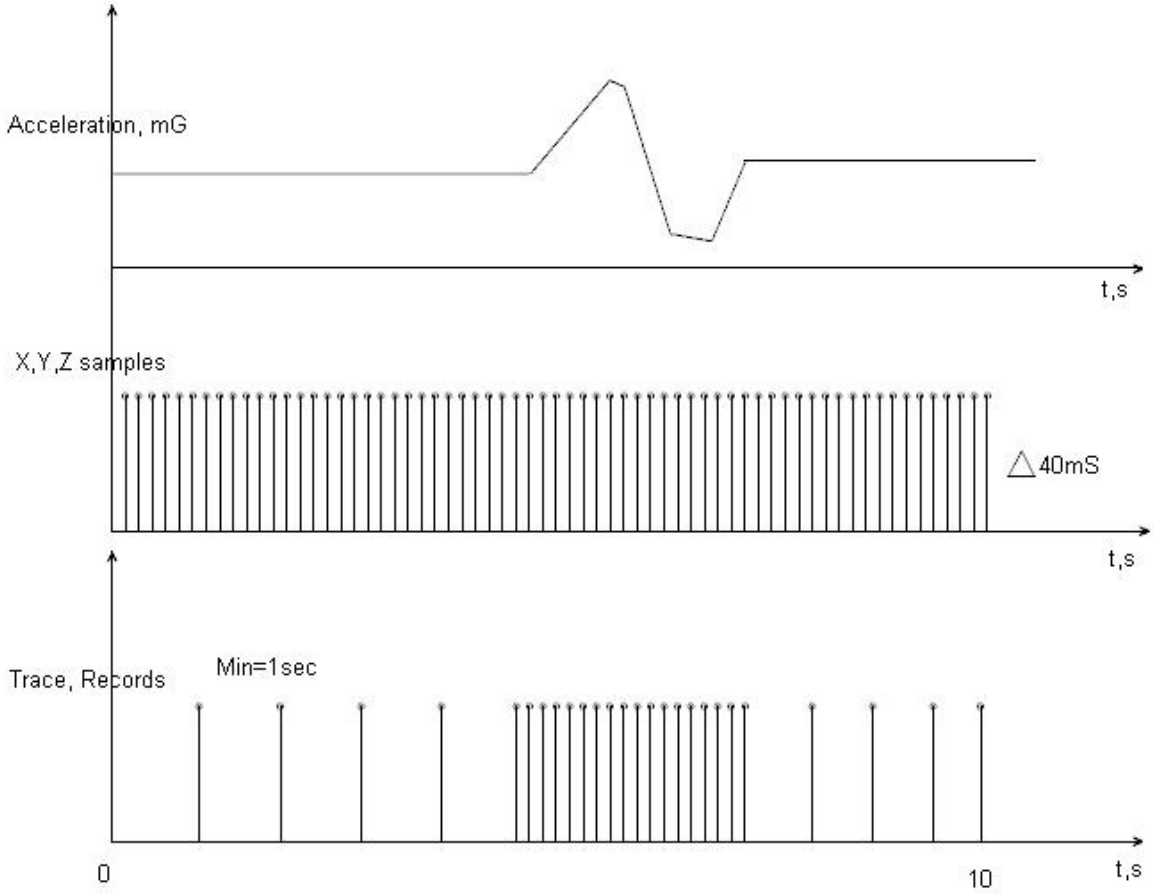

Figure 20 example of Crash Trace logic

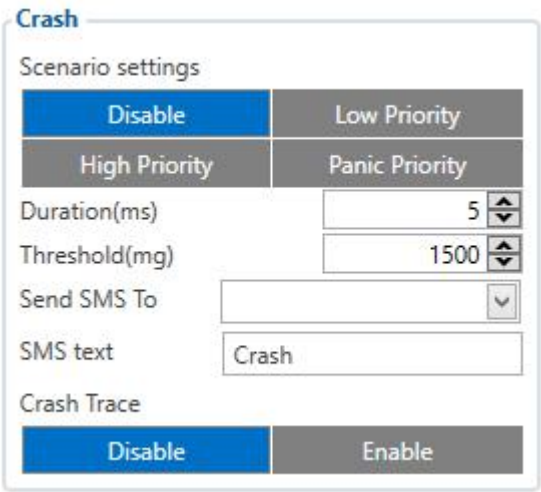

Figure 21 Crash detection configuration

6.11 DOUT ON/OFF Duration

In all scenarios that control Digital Output, Digital Output can be controlled independent from scenario.

DOUT ON Duration parameter shows for how long DOUT is set on after scenario is activated and DOUT OFF Duration parameter shows how long DOUT is set off after DOUT ON duration ends. After DOUT OFF duration ends, DOUT ON duration will be counted agen. This period continues until scenario turns off. DOUT ON and DOUT OFF duration parameters must be configured in ms.

6.12 DOUT control depending on functionality priority

All DOUT control functionalities now have their own priority (non-configurable). Depending on priority DOUT control may be overtaken by higher priority functionality without finishing previous scenario.

DOUT control scenarios and functionalities by priority:

- Immobilizer (highest priority)
- DOUT control via call
- iButton Notification
- Green Driving
- Jamming
- Overspeeding
- Idling
- DOUT control via SMS (lowest priority)

For example, if jamming will be detected during Overspeeding, then Jamming functionality will control DOUT.

6.13 AutoGeofencing settings

AutoGeofence – the last known position after movement = off. If your car's being taken away – you can be notified. The shape and size of the geofence zones are parameters. It is possibility to state whether entering in or out of the geofence triggers an asynchronous message.

AutoGeofencing option can be configured by following parameters visible in figure 34 below.

Activation Timeout (s) – when ignition is turned off and activation timeout passes, as AutoGeofence will be created around vehicle last position with set radius value.

Radius (m) – radius of circle with center device coordinates after activating AutoGeofence feature.

Deactivate By:

Digital Input 1 – If DIN1 voltage becomes equal or higher than 6,9 V it will disable AutoGeofenze Zone.

Digital Input 2 – If DIN2 voltage becomes equal or higher than 2,1 V it will disable AutoGeofenze Zone.

Digital Input 3 – If DIN3 voltage becomes equal or higher than 3,5 V it will disable AutoGeofenze Zone.

iButton – if authorized iButton is attached.

Power Voltage – if power voltage become higher that low voltage level (Ignition settings) it will disable AutoGeofenze Zone.

Engine RPM – If engine RPM became higher that 0 it will disable AutoGeofence Zone.

Feature – Priority of generated event, which will be applied to saved record.

Enter Event – Event generation on Geofence entrance.

Exit Event – Event generation on Geofence exit.

On Both - Event generation on Geofence entrance Or exit

Eventual Records – Enable or Disable Eventual Records functionality.

Note that AutoGeofencing does not require entering coordinates, instead it requires GPS visibility. If vehicle stopped and activation timeout has passed, an AutoGeofence will be created around vehicle's last position with set Radius value.

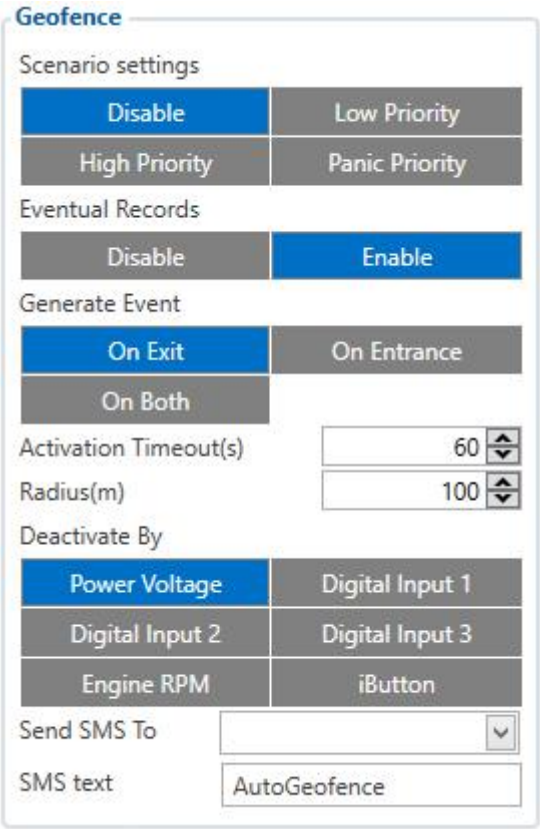

Figure 22 Auto Geofence configuration Parameters

6.14 Manual Geofence

FMB2YX has 50 configurable Geofence zones and it can generate an event when defined Geofence zone border is crossed.

Frame border – frame border is an additional border around Geofence zone. It is additional area around defined zone used to prevent false event recording when object stops on the border of the area and because of GNSS errors some records are made inside area and some – outside. Event is generated only when both borders are crossed. See **figure 35** for details: blue track is considered to have entered the area while red track is not.

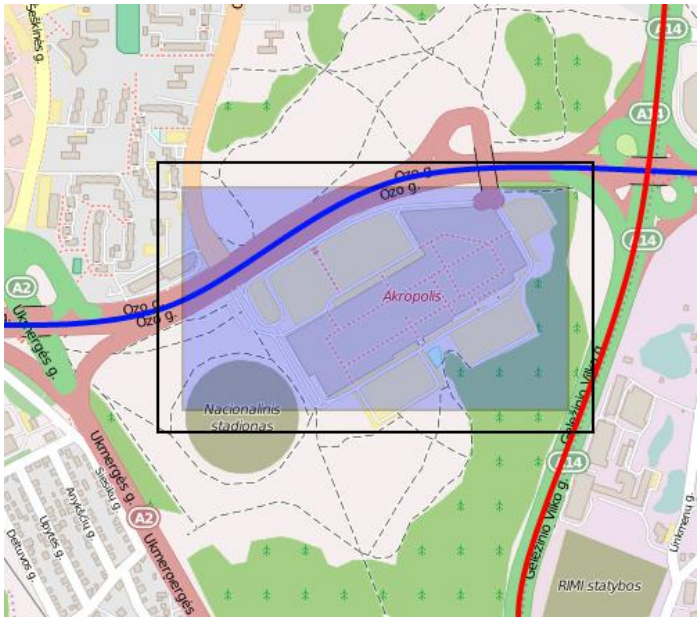

Figure 23 Geofence border

Shape – can be rectangle or circle. User can choose what geozone shape will be.

Priority – priority of Geofence event: low, high or panic. These levels define priority of event information sending to server. See I/O element description for more details about priorities in I/O settings chapter.

Generate event (On entrance, On exit, On Both) – choose when record will be generated.

Eventual records – when disabled scenario status value will be appeared in each AVL record, and when enabled scenario status value will be appended only to eventual records.

OverSpeeding – in each geozone OverSpeeding scenario can be configured separately. Regular OverSpeeding functionality and geozones OverSpeeding funkctionality is working independently. If digital output control is enabled in regular OverSpeeding scenario, geozones OverSpeeding scenario controls it too. If device is in more that one geozone and OverSpeeding is detected in any zone then digital output turns on. Digital output turns off only when OverSpeeding is not detected anywhere (regular OverSpeeding and geozones OverSpeeding).

X1 – geofence zone left bottom corner X coordinate (longitude);

Y1 – geofence zone left bottom corner Y coordinate (latitude);

X2 or R – geofence zone upper right corner X coordinate (longitude) or radius of circle when Circular zone is used (radius in meters);

Y2 – geofence zone upper right corner Y coordinate (latitude).

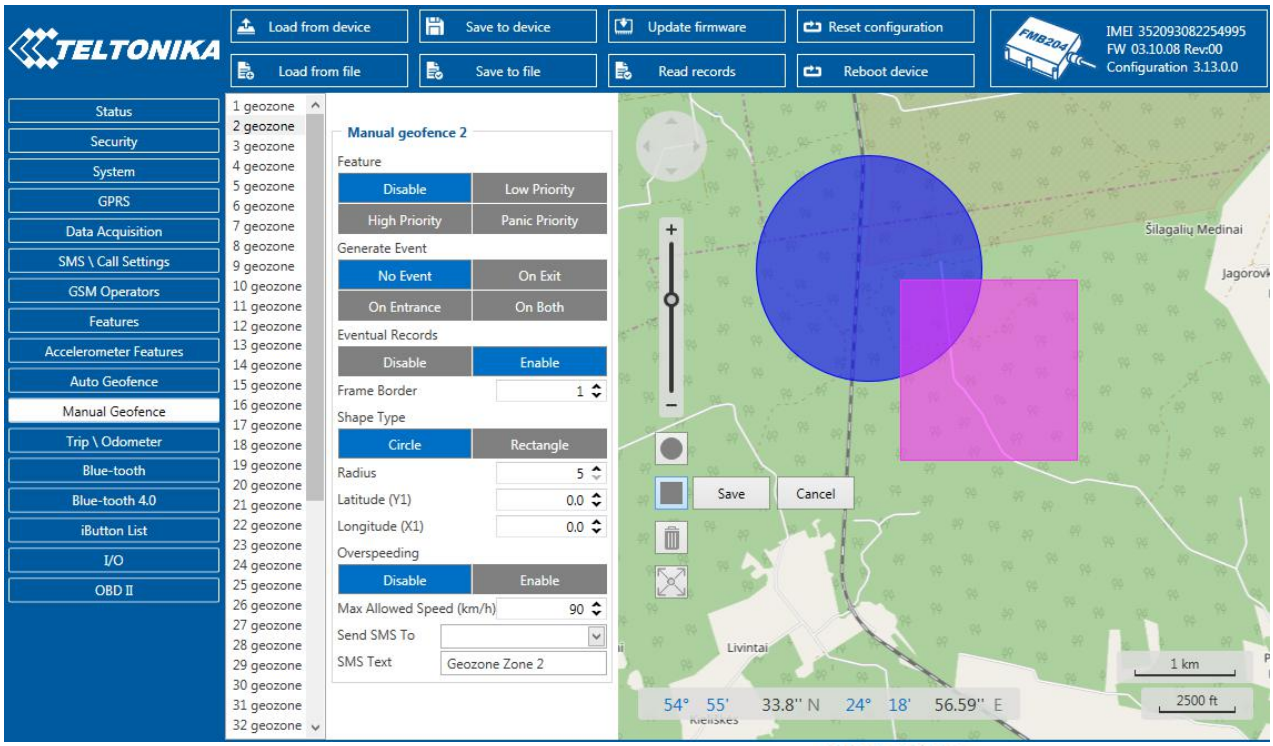

Figure 24 Geofence configuration

6.15 Trip \ Odometer

6.15.1 Trip settings

Trip window offers user to configure Trip feature. If Trip is enabled configuration of parameters are enabled.

Start Speed (km/h) – GPS speed has to be greater than the specified Start Speed in order to detect Trip Start.

Ignition OFF Timeout (s) – timeout to wait if ignition (configured ignition source) was off, to detect Trip stop.

Distance counting mode – Between Records or Continuous can be chosen. For this feature I/O Trip Odometer must be enabled.

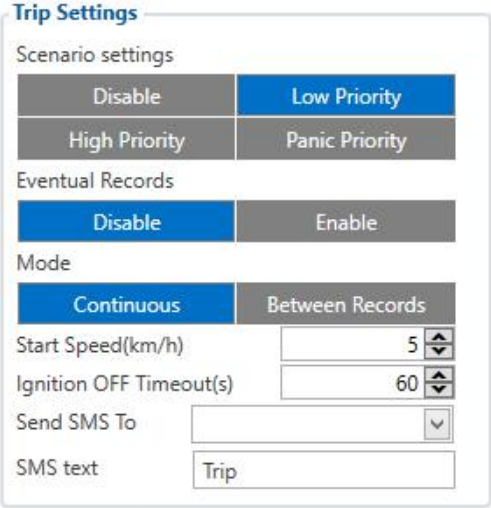

Figure 25 Trip Settings configuration

If I/O Trip Odometer is enabled and Continuous distance counting variable (Mode) is set to Continuous, **Trip distance** is going to be counted

continuously (**from Trip start to Trip stop**). This value is written to I/O Trip Odometer value field. When Trip is over and next Trip begins, Trip Odometer value is reset to zero. When the next trip starts counting continuously starts from the beginning again.

If I/O Trip Odometer is enabled and Continuous Distance Counting variable (Mode) is set "Between Records", then the distance is going to be counted only between every record made. This value is written to I/O Trip Odometer value field and reset to zero every new record until Trip stops. If later all Odometer values are summed up manually, the user gets the distance driven during the whole period of the Trip.

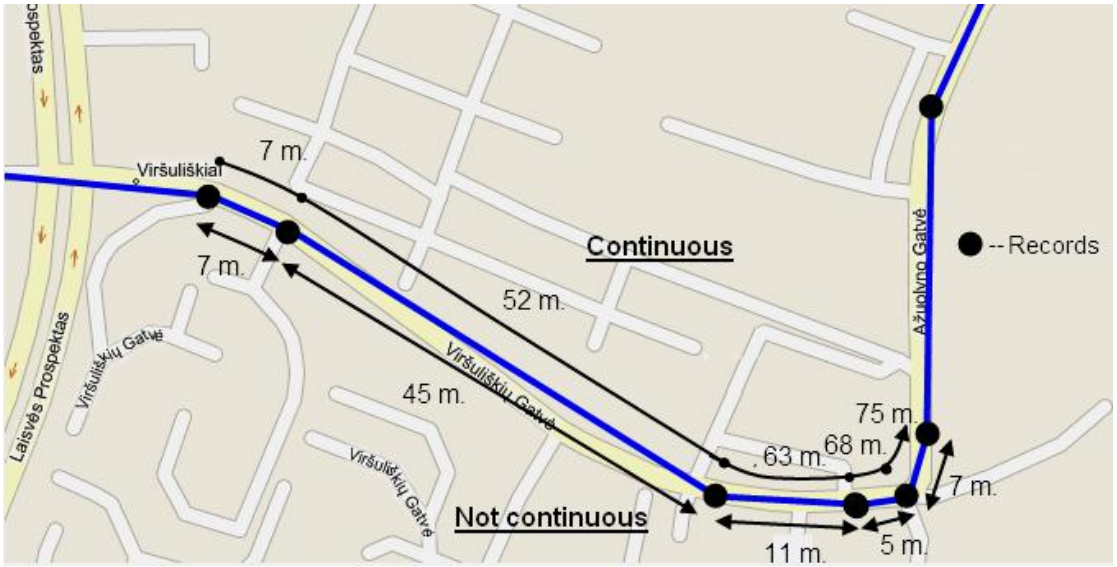

Figure 26 Continuous trip odometer and not continuous trip odometer distance counting example

6.15.2 Advanced Trip Settings

Advanced trip settings allow configure number of Eco Score allowed events in 100 km and enable or disable iButton remember functionality.

Eco Score allowed events – how much ECO events is allowed in 100 km. I/O Eco score must be enabled to get value into server. ECO scoring is differentiated by separate Trips.

There are six ECO evaluation events:

- Harsh acceleration
- Harsh braking
- Harsh cornering
- Over-speeding (count only events with value 1 (start) and ignore value 0(end))
- Excessive Idling (count only events with value 1 (start) and ignore value 0(end))
- High RPM

Eco score value can be from 10 (excellent) to 0.00 (very bad):

- Excellent 8.00 – 10
- Good 6.00 – 7.99
- Not Good 4.00 – 5.99
- Bad 2.00 – 3.99
- Very Bad 0.00 – 1.99

Score evaluation is calculated like this:

Eco score =10/ ((Total events)/ (Trip distance in km* **Allowed events per km**))

Allowed events per km = (Eco Score allowed events /100)

Note: when Total events < 1, we ignore formula and then Eco score is equal to 10.

If Eco Score allowed events is configured to 0, then Eco score value can have only two values: 0 (when total events > 0) or 10 (when total events = 0).

Note: Score is updated every 1km driven or 5 minutes of trip duration.

Remember iButton functionality. If *Remember iButton ID while trip detected* and *Trip* parameters are enabled, ignition is on and iButton is attached, then FMB2YX remembers iButton ID. iButton ID is saved and sent to server with every record. If new iButton is attached during the trip, FMB2YX remembers new iButton ID. FMB2YX forgets iButton ID after ignition is off and trip ignition off timeout is reached.

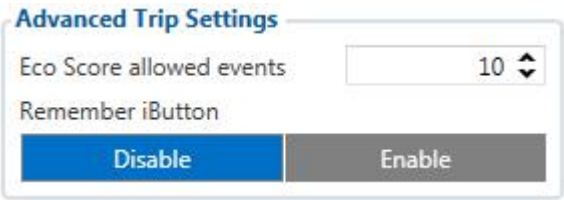

Figure 27 Advanced Trip configuration

6.15.3 Odometer

Calculation Source – choose odometer calculation source of GNSS, OBD or LVCAN.

Odometer Value –sets starting total odometer value.

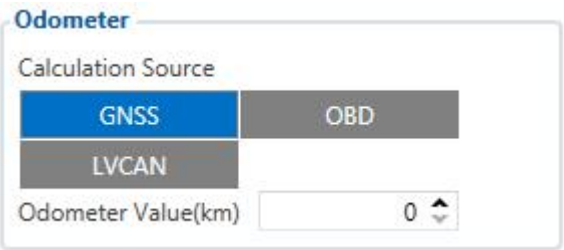

Figure 28 Odometer configuration

6.16 blue-tooth

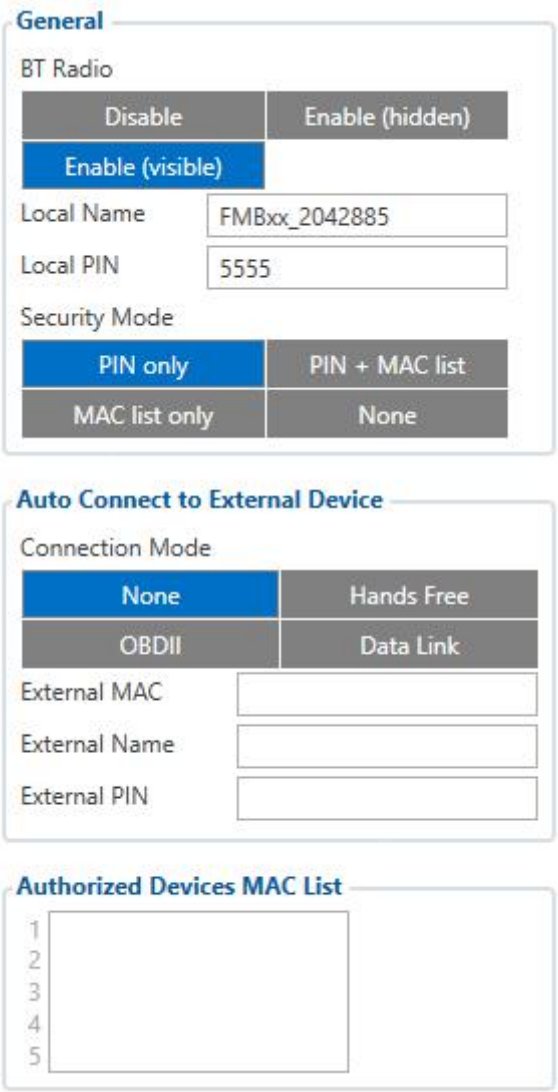

Figure 29 blue-tooth general functionality

6.16.1 General functionality

General functionality configures blue-tooth to work in *slave* mode. This mode allows any external device to connect to FMB2YX.

Parameter *BT Radio* allows user to select if he wants to enable or disable blue-tooth. There are three different scenarios:

1. Disabled – blue-tooth functionality will be disabled.
2. Enable (hidden) – blue-tooth functionality will be enabled, but none of external devices will be able to detect FMB2YX but will be able to connect.
3. Enable (visible) – blue-tooth functionality will be enabled and any external device will be able to detect and connect to FMB2YX.
4. *Local Name* parameter lets user to declare visible name of FMB2YX to external devices.
5. *Local PIN* parameter lets user to configure blue-tooth PIN of FMB2YX device.

FMB2YX blue-tooth has several different *security modes*:

- PIN only – while external device trying to connect to FMB2YX only *Local PIN* will be reacquired to complete connection.
- PIN + MAC list – while external device trying to connect to FMB2YX *Local PIN* and *Authorized Devices MAC List* will be checked. If external device MAC ID is in the list

and correct *Local PIN* is entered then connection will be established, else FMB2YX will reject connection.

- MAC list only – while external device trying to connect to FMB2YX only *Authorized Devices MAC List* will be checked. If external device MAC ID is in the list then connection will be established, else FMB2YX will reject connection.
- None – while external device trying to connect to FMB2YX neither *Local PIN* or *Authorized Device MAC list* will be checked.

Auto Connection to External Device functionality

Auto connection functionality configures FMB2YX as *master* device, this allows FMB2YX connect to external device. FMB2YX currently supports these modes:

- None – disables auto connection functionality.
- Hands Free – FMB2YX starts to search external hands free headset. If FMB2YX finds device which matches user defined *External MAC* or *External Name* then FMB2YX will try to pair with that external device. If external device asks for PIN then FMB2YX will send user defined *External PIN*. After successful pairing FMB2YX will connect to paired device.
- OBDII – FMB2YX starts to search external OBDII blue-tooth dongle. If FMB2YX finds device which matches user defined *External MAC* or *External Name* then FMB2YX will try to pair with that external device. If external device asks for PIN then FMB2YX will send user defined *External PIN*. After successful pairing FMB2YX will connect to paired device.
- Data Link – BT Data link mode is enabled by Configurator “Data Link” parameter: When Data Link is configured and FMB has a link with server, paired device could send messages via blue-tooth SPP profile directly to server. Messages will be encoded by codec12.

NOTE: FMB2YX supports ONE connection at a time.

NOTE: FMB001 can see up to 10 available devices. If there are more then 10, with each scanning the list may change.

External Name parameter works as substring, this allows user to enter part of the full external device name. For example, if external device name is "*HandsFreeHeadset*" and user enters "*HandsFree*" in *External Name* parameter window then FMB2YX will be allowed to connect to external device named "*HandsFreeHeadset*".

6.16.2 How to connect blue-tooth Hands Free adapter to FMB device

6.16.2.1 blue-tooth settings configuration

These are instructions how to easily prepare blue-tooth Hands Free device connection to FMB device. First we need to configure FMB device blue-tooth settings for proper connection to this hands-free unit. These are required steps:

- Connect FMB device to PC using USB cable.
- Launch **FMB Configurator** and connect to device as shown in **Figure 42** below**.**

Figure 30 FMB2YX configurator connected devices window

- After successful connection to device wait few moments while device load current configuration, then go to blue-tooth section that visible at **Figure 31**

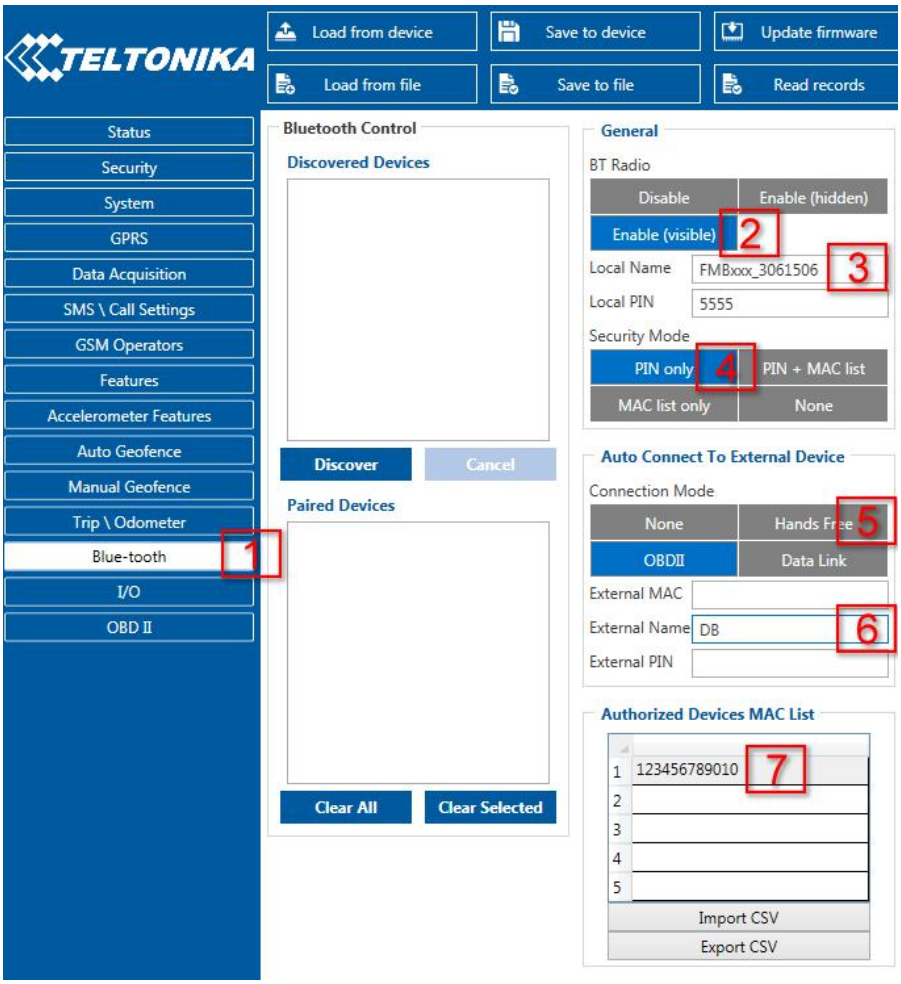

Figure 31 1- blue-tooth settings; 2 - Enable blue-tooth; 3 - blue-tooth local name; 4 - blue-tooth security mode; 5 - Hands Free connection mode; 6 - External blue-tooth device name; 7 - Authorized Devices MAC List;

- When device configuration is loaded press „**blue-tooth**“ settings (**Figure 31** 1 position).
- Turn on BT Radio by pressing „**Enable (visible)**“ (**Figure 31** 2 position**)**. “**Local name**” (**Figure 31** 3 position) automatically will be “FMB2YX_last 7 imei digits”, you can leave it or type your own name.
- Set Security Mode (**Figure 31** 4 position) to “**PIN only**” or “**None**” (you could select “**PIN + MAC list**” or “**MAC list only**” security mode but in this case you need to type

external device MAC address in "**Authorized Devices MAC List**" (**Figure 31** 7 position).

- Set connection mode to "**Hands Free**" (**Figure 31** 5 position).
- Set „**External Name**" (**Figure 31** 6 position) as your Hands Free device name for proper device identification and connection to it. In this example Hands Free headset name is „DMH10" but at least 2 characters are needed to recognize it and connect to it. For better and faster adapter identification in network you could enter a full device name. You could check your Hands Free adapter blue-tooth name by scanning nearby blue-tooth devices using mobile phone or computer with blue-tooth adapter.
- Go to "**SMS \ Call Settings**" in left menu and set "**Incomming Call Action**" to "**Do Nothing**" visible at **Figure 32**.

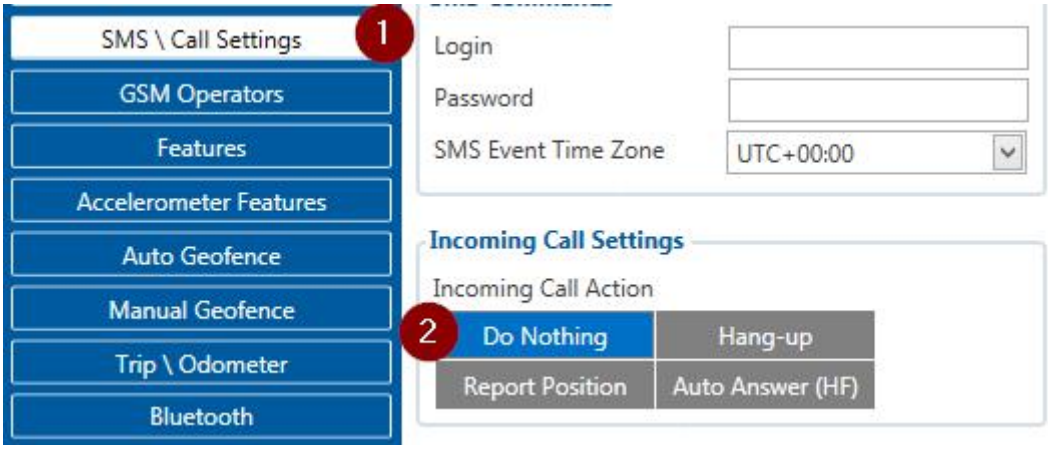

Figure 32 Incoming Call Action settings

- After all these steps press „**Save to device**" to save configuration.
- Now you can disconnect FMB device from a configurator.

6.16.2.2 Connecting blue-tooth Hands Free adapter

After this configuration you could connect your Hands Free device to FMB device. Turn on Hands Free device then turn on its blue-tooth connection for pairing following your model instructions[1]. Hands Free adapter should make a special sound in ear from speaker or its led identification should change to inform about successful connection[2]. To check if adapter is successfully connected, call to FMB device, Hands Free device should start ringing. If you later restart FMB device it will automatically connect to this adapter.

6.16.3 Device's log using your mobile phone.

When FMB device starts, automatically blue-tooth is ON too. Take your mobile phone, go to settings>blue-tooth and turn it on. Scan for near by devices, find you device in list, distinguish device by last IMEI numbers on device module. Press pair, wait until device will ask to enter pairing password, type: 5555. Paired device will show up in paired device list. Now download from play store/app store terminal for blue-tooth. E.g BlueTerm. Run app, click find>connect to your paired device. Now we need to send command to FMB2YX from blue-tooth terminal, type: .log:1

Device will respond Debug enabled and FMB2YX log will how up. Do not forget to start save log file to mobile phone.

[1] Hands Free device blue-tooth connection pairing instructions depends on specific model.
[2] Hands Free device notification about paired blue-tooth connection depends on specific model.

6.16.4 Device debug over Android smartphone

- Scan for visible BT devices using your Android smartphone and connect to your FMB device.

  Default FMB BT name: ***FMB2YX_last_7_imei_digits***
  Default PIN code: ***5555***

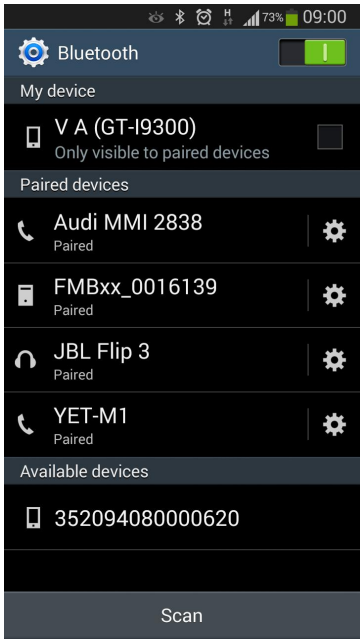

- Download "blue-tooth Terminal" application. You can use link or QR code shown here:
  https://play.google.com/store/apps/details?id=com.hatflabs.btt

- Run blue-tooth Terminal. In menu press "Connect" button and select paired FMB device. To start log check CR and enter the command in terminal: ***.log:1***

- Wait ~10 minutes and press "Save" button in menu. You will find saved log file in device folder (My Files/blue-tooth Terminal), select log files and press button Share via Email

and send them to the Teltonika support.

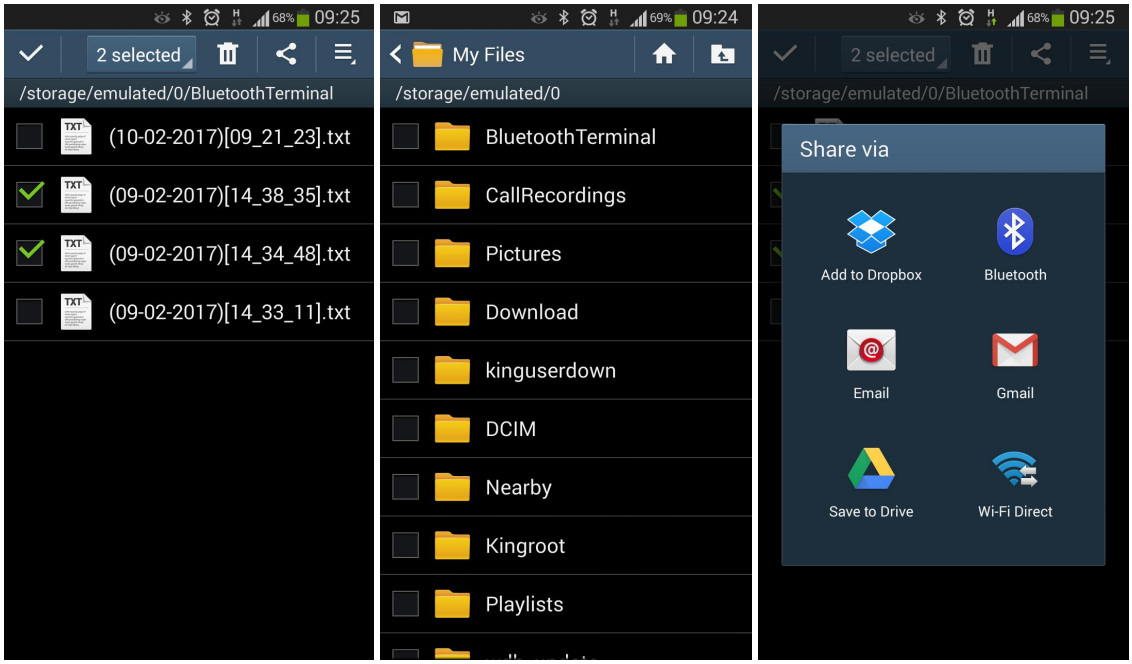

In order to pair FMB device with Android smartphone, make sure that BT radio is enabled (visible) in device configuration. It can be checked via SMS command too:

getparam 800

The answer has to be 2, which means "Enabled and visible".

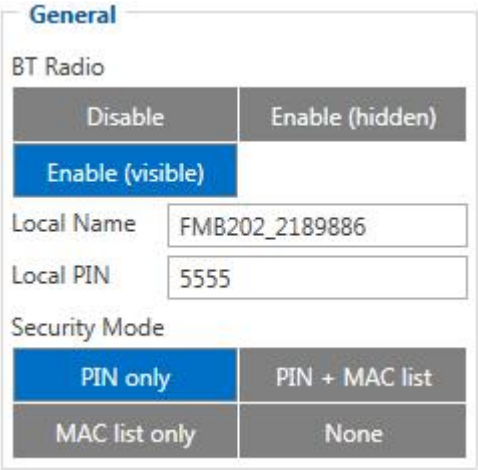

Note: Unfortunately it is not possible to do the same on iPhone, because there is no native SPP blue-tooth profile support in iPhone.

6.16.5 How to connect OBD II blue-tooth Dongle to FMB device

6.16.5.1 blue-tooth settings configuration

These are instructions how to easily prepare blue-tooth Dongle connection to FMB device. First we need to configure FMB device blue-tooth settings for proper connection to this unit. These are required steps:

- Connect FMB device to PC using USB cable.

- Launch **FMB Configurator** and connect to device as shown in **Figure 33** below**.**

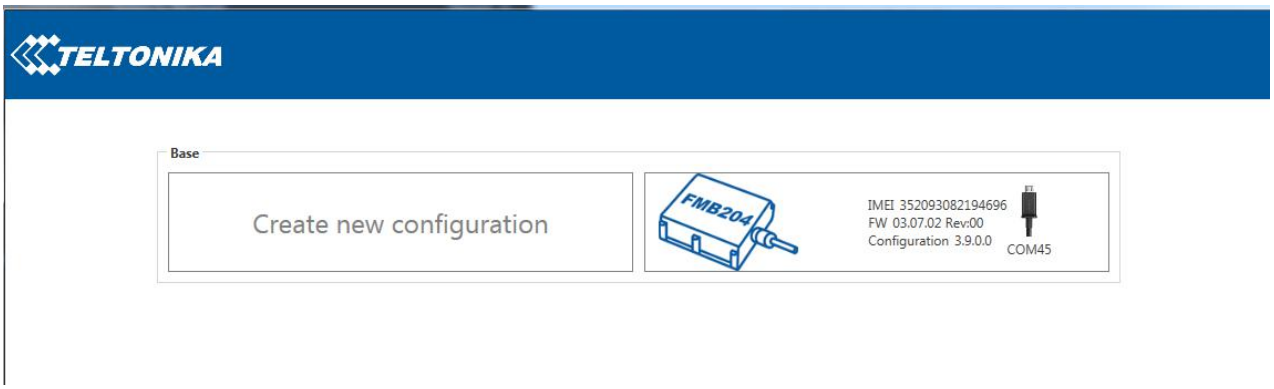

Figure 33 FMB2YX configurator connected devices window

- After successful connection to device wait few moments while device load current configuration, then go to blue-tooth section that visible at **Figure 34.**

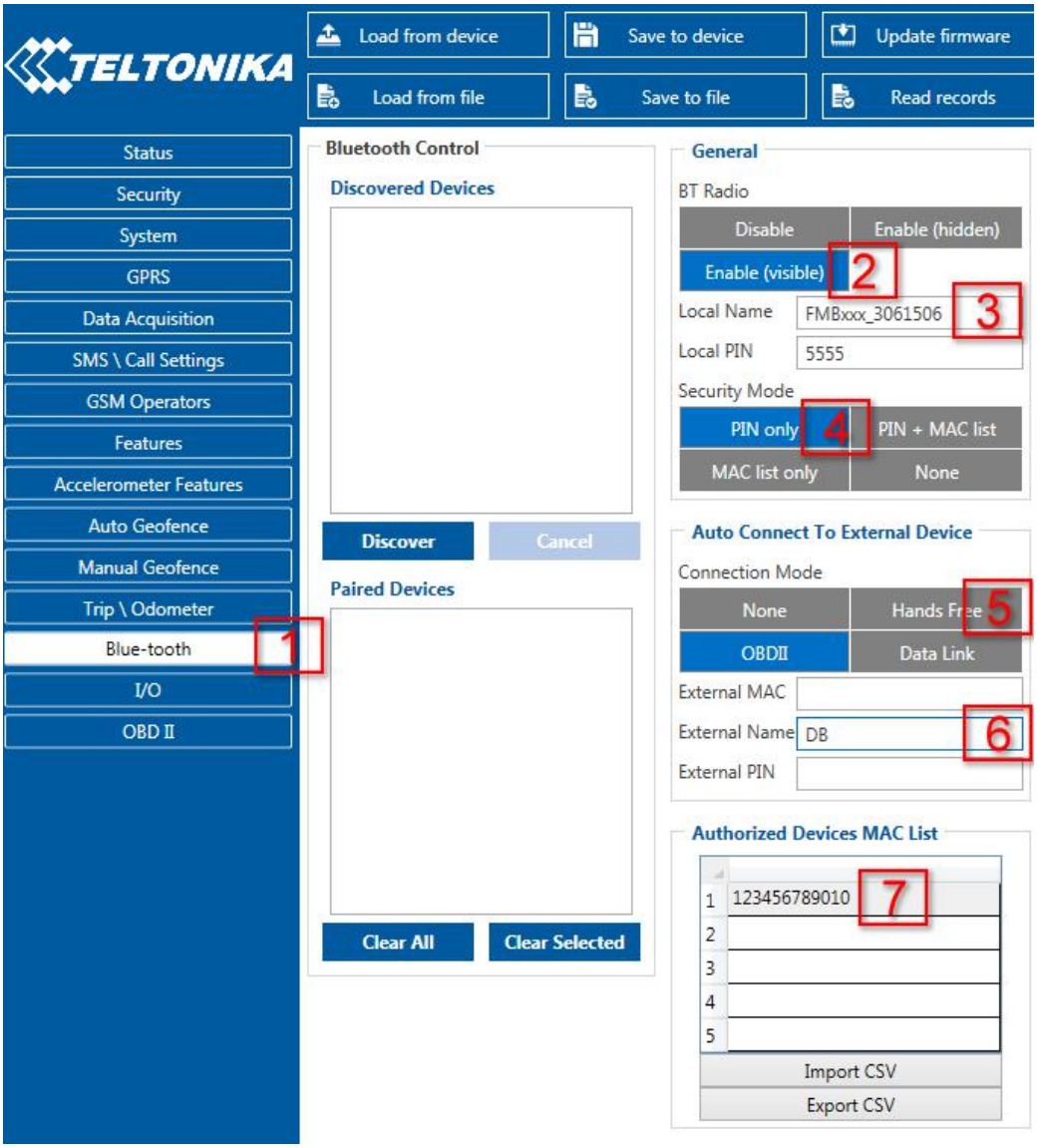

Figure 34 1- blue-tooth settings; 2 - Enable blue-tooth; 3 - blue-tooth local name; 4 - blue-tooth security mode; 5 - OBD II connection mode; 6 - External OBD II blue-tooth device name; 7 - Authorized Devices MAC List; 8 - Save device configuration

- When device configuration is loaded press „**blue-tooth**“ settings (**Figure 34** 1 position).
- Turn on BT Radio by pressing „**Enable (visible)**“ (**Figure 34** 2 position**)**. “**Local name**” (**Figure 34** 3 position) automatically will be “FMB2YX_last 7 imei digits”, you can leave it or type your own name.
- Set Security Mode (**Figure 34** 4 position) to “**PIN only**” or “**None**” (you could select “**PIN + MAC list**” or “**MAC list only**” security mode but in this case you need to type external device MAC address in “**Authorized Devices MAC List**” (**Figure 34** 7 position).
- Set connection mode to “**OBDII**” (**Figure 34** 5 position).
- Set „**External Name**“ as your blue-tooth OBD II device name for proper device identification and connection to it. In this example OBD II device name is „DONGLE“ but at least 2 characters are needed to recognize it and connect to it. For better and faster adapter identification in network you could enter a full device name. You could check your OBD II adapter blue-tooth name by scanning nearby blue-tooth devices using mobile phone or computer with blue-tooth adapter.
- Go to “**OBD II (blue-tooth)**” in left menu and select priority and others parameters visible at **Figure 35**.

Figure 35 OBD II blue-tooth settings.

- After all these steps press „**Save to device**“ to save configuration (**Figure 34** 8 position**)**.
- Now you can disconnect FMB device from a configurator.

6.16.5.2 Connecting to blue-tooth OBD II dongle

After this configuration you could connect your car OBD II dongle to FMB device. Turn on ignition then turn on its blue-tooth connection. For pairing follow your dongle instructions[1]. OBD II device notification about paired blue-tooth connection depends on specific model. If you later restart FMB device it will automatically connect to this dongle.

6.16.5.3 Supported blue-tooth OBD II dongles

FMB module works with blue-tooth OBD II dongles which are made with **ELM327** or **STN1110** chips.

Comparison of these chips is presented in **Figure 36.**

	ELM327 v1.4	STN1110
Base microcontroller	PIC18F2580	PIC24HJ128GP502
Architecture	8-bit	16-bit
Processing speed	4 MIPS	40 MIPS
Flash (ROM)	32 KB	128 KB
RAM	1.5 KB	8 KB
Pin count	28	28
Available packages	PDIP, SOIC	PDIP, SOIC, QFN
Supply voltage range	4.5 to 5.5V	3.0 to 3.6V[1]
Supports all OBD-II protocols	yes	yes
ELM327 command set	yes	yes
Enhanced "ST" command set	no	yes
Firmware upgradeable	no	yes
Large OBD message memory buffer	no	yes
Low power mode	yes	yes
Supported UART baud rates	9600 bps to 500 kbps	38 bps to 10 Mbps
OBD message filtering	basic	advanced

Figure 36 ELM327 and STN1110 comparison.

6.16.6 How to connect blue-tooth Low Energy device to FMB device

6.16.6.1 blue-tooth settings configuration

These are instructions how to easily prepare blue-tooth Low energy device connection to FMB device. First we need to configure FMB device blue-tooth settings for proper connection to this unit. These are required steps:

- Connect FMB device to PC using USB cable.
- Launch **FMB Configurator** and connect to device as shown in **Figure 37** below**.**

[1] OBD II dongle blue-tooth connection pairing instructions depends on specific model.

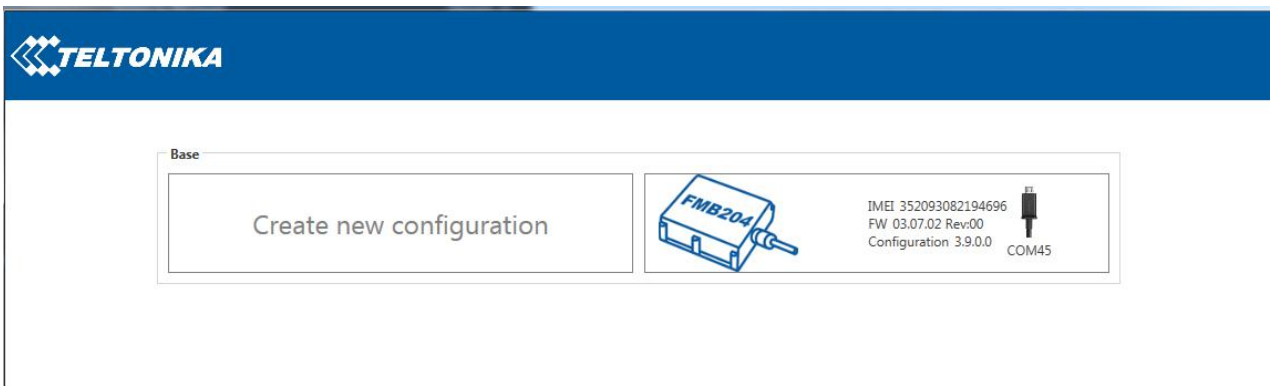

Figure 37 FMB2YX configurator connected devices window

- After successful connection to device wait few moments while device load current configuration, then go to blue-tooth section that visible at **Figure 37.**

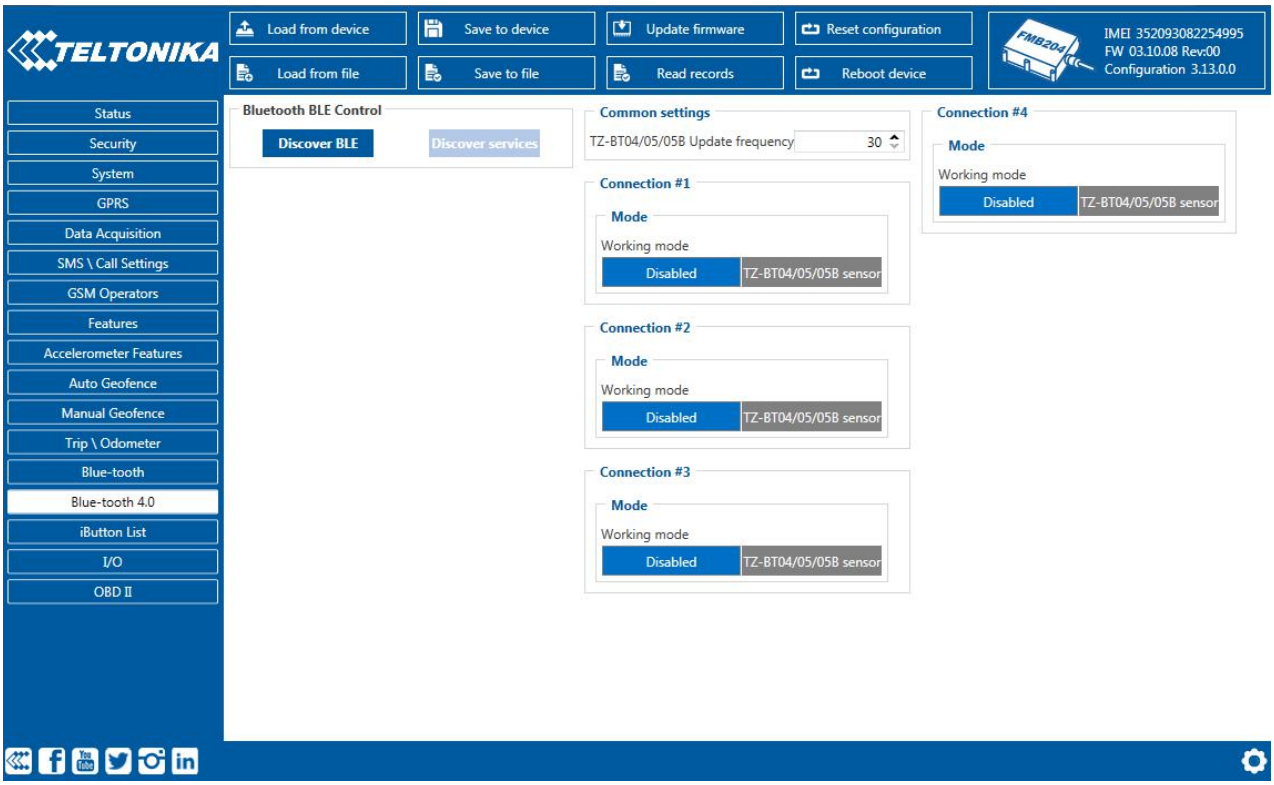

Figure 38 1- blue-tooth 4.0 settings; 2 - Enable blue-tooth mode; 3 - blue-tooth ID (MAC);

- When device configuration is loaded press „**blue-tooth 4.0**“ settings (**Figure 38** 1 position).
- Change BTLE Radio mode by pressing „**TZ-BT04/05 sensor**“ (**Figure 38** 2 position**)**. “**ID**” (**Figure 38** 3 position) is the sensor’s MAC address that you want to connect.
- Go to “**I/O**” in left menu and select priority and others parameters visible at **Figure 39**.

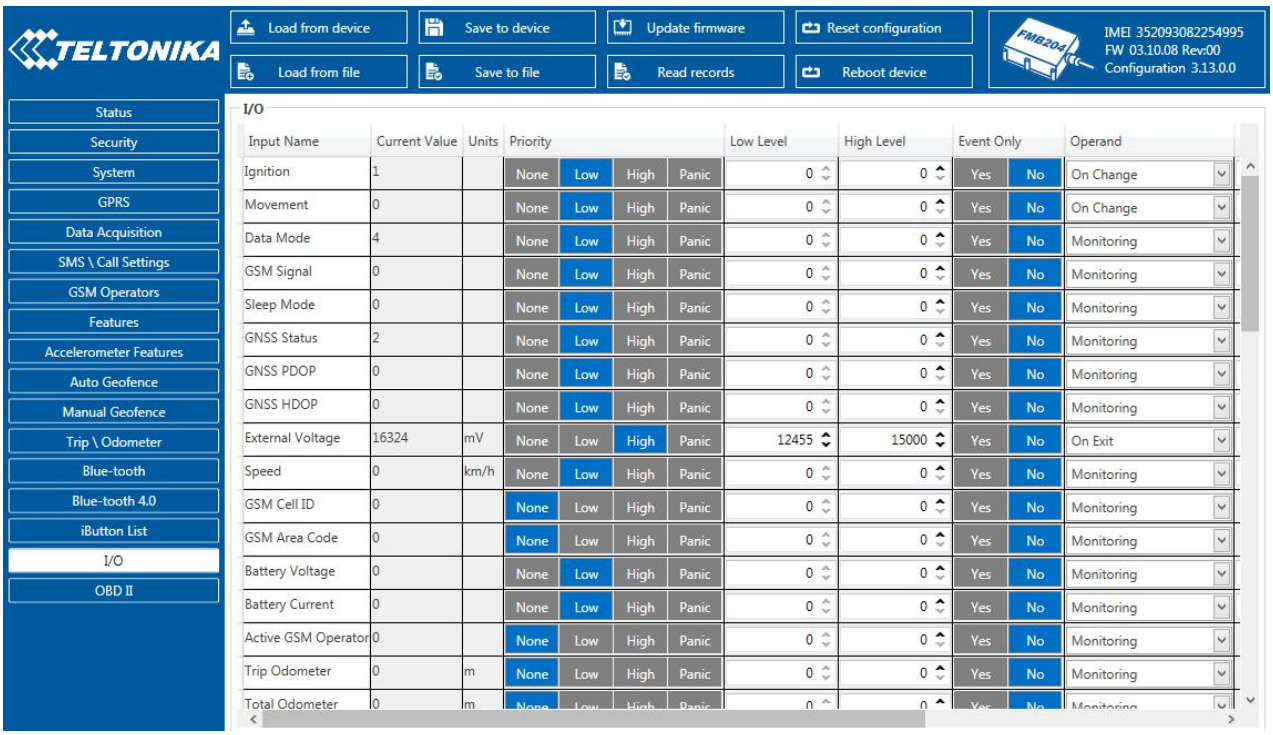

Figure 39 I/O blue-tooth 4.0 sensor settings.

- After all these steps press „**Save to device**“ to save configuration.
- Now you can disconnect FMB device from a configurator.

6.17 SMS events

SMS events functionality allows FMB2YX to send a configured SMS when an event is triggered. This event can be triggered by every I/O element.

Then any of the I/O elements is triggered, FMB2YX sends a configured SMS message to a defined phone number. If SMS events is activated, but there are no numbers defined in GSM PreDefined Numbers list (F**igure 40**), then the device will not send any messages.

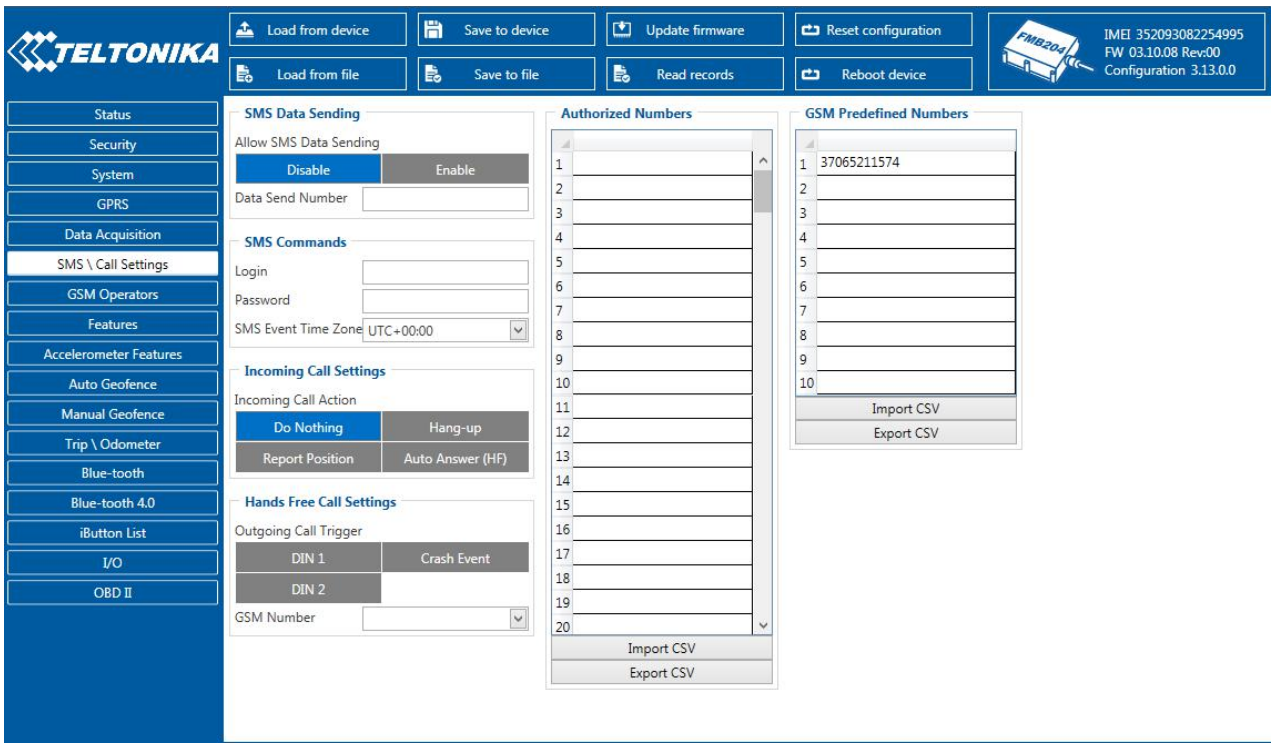

Figure 40 GSM PreDefined Numbers list

The sent SMS messages format is according to:

"Date Time Current Coordinate Event Text"

For example, if FMB2YX is configured to send an SMS, when Ignition reaches High level, with priority High and configured to generate event on both range enter and exit (**figure 41**), then the sent SMS is:
"2017/06/13 13:52:18 Lon:25.255537 Lat:54.667193 Ignition 1"

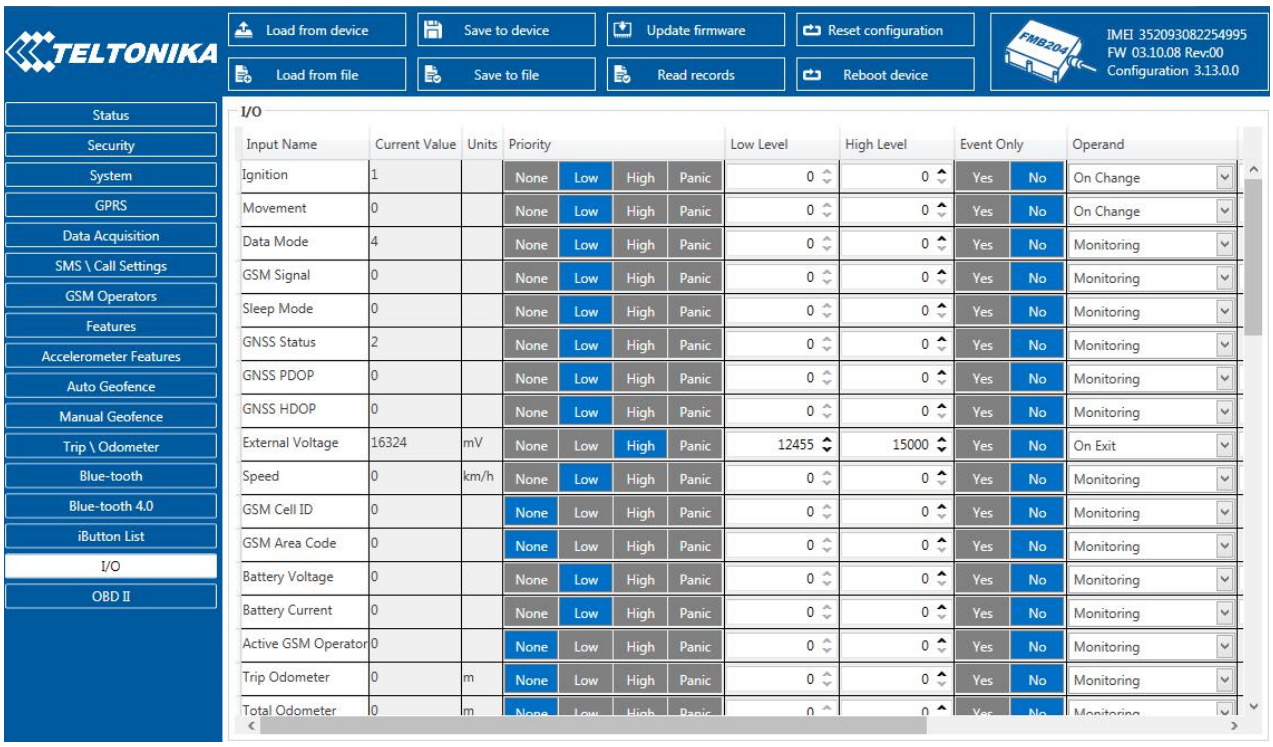

Figure 41 Configured Ignition SMS event

The SMS Text field can be altered and any text can be entered. Maximum message length is 160 symbols (numbers, letters and symbols in ASCII, except for comma “,”).

ATTENTION!
If FMB2YX is in Deep Sleep mode and SMS event occurs with LOW priority (which does not wake up FMB2YX), then the device does not send the message. It is saved in device memory until it wakes up from Deep Sleep mode and GSM modem starts working normally. After it wakes up, all the messages that are saved in memory will be sent, but keep in mind that only 10 messages can be saved in memory – all other messages will not be saved, until there is room in device memory.

6.18 iButton List

iButton list is used to enter authorized iButton ID codes, which are used to authenticate driver in Immobilizer scenario and deactivate Auto Geofencing zone.

iButton number must be entered full into iButton List (16 symbols in hexadecimal format), if iButton will be entered shorter that 16 symbols it will not be saved into device.

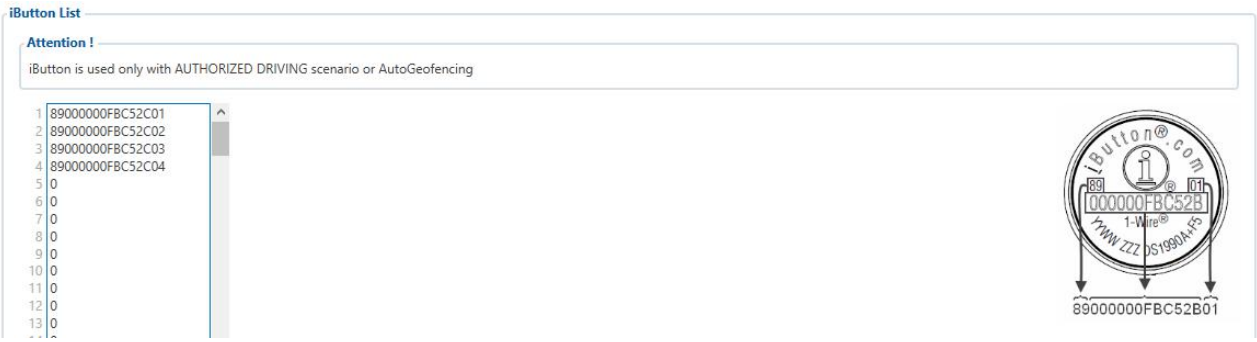

Figure 42 iButton List

6.19 I/O settings

When no I/O element is enabled, AVL packet comes with GNSS information only. After enabling I/O element(s) AVL packet along with GNSS information contains current value(s) of enabled I/O element.

Current value – if device is connected to configurator all current I/O values are displayed in this column.

Priority field – allows enabling I/O element and set them priority so it is added to the data packet and is sent to the server. By default 12 I/O elements with low priority are enabled: Ignition, Movement, Data Mode, GSM Signal, Sleep mode, GNSS Status, GNSS PDOP, GNSS HDOP, External Voltage, Speed, Battery Voltage and Battery Current. Priority (AVL packet priority) can be Low, High or Panic. All records made by FMB2YX are regular. Regular packets are sent as Low priority records. When low priority event is triggered, FMB2YX makes additional record with indication that the reason for that was I/O element change (depends from Operand configuration). When High priority is selected, module makes additional record with high priority flag and sends event packet immediately to the server by GPRS. Panic priority triggers same actions as high priority, but if GPRS fails, it sends AVL packet using SMS data sending mode if **SMS data sending is enabled and data send number is written in SMS \ Call Settings**.

High and Low levels – define I/O value range. If I/O value enters or exits this range, FMB2YX generates event. “Operand” parameter defines when to generate event: On Exit, On Entrance, On Both, On Hysteresis and On Delta Change.

Event only - when selected NO, I/O element status value will be appeared in each AVL record, and when selected YES, I/O element status value will be appended only to eventual records.

Operand – defines when event is send:

6.19.1 Operand On Exit

Record is generated when actual value input increases and becomes higher than high level or decreases and become lower than low level.

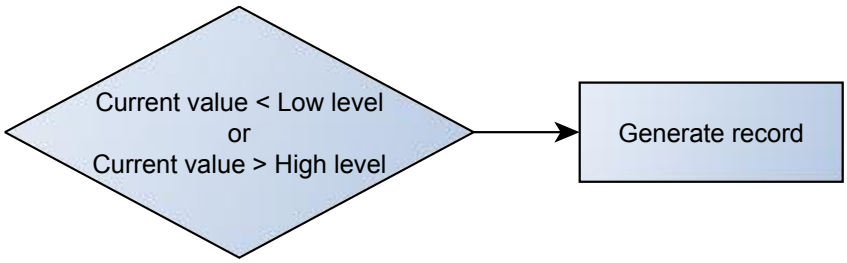

Figure 43 On Exit operand logic

6.19.2 Operand On Entrance

Record is generated when actual value input increases or decreases and becomes between high and low level values.

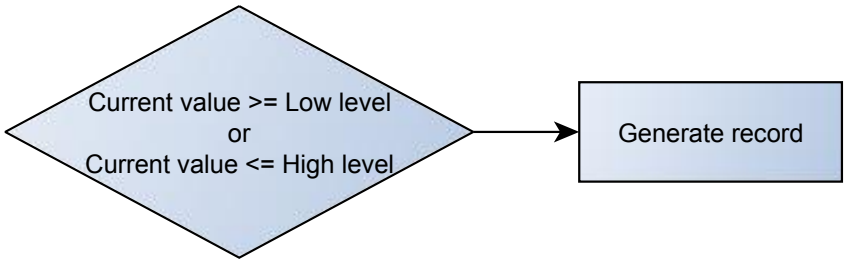

Figure 44 On Entrance operand logic

6.19.3 Operand On Both

Record is generated by both (On Exit and On Entrance) operands logic at same time.

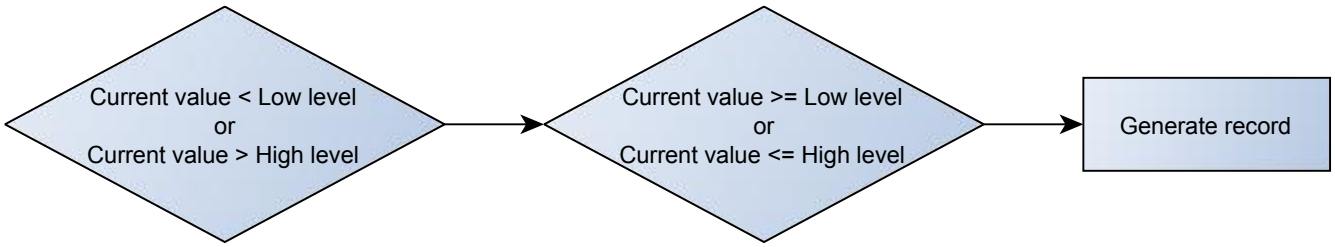

Figure 45 On Both operand logic

6.19.4 Operand Monitoring

No event at all. Values are recorded only when other trigger have worked.

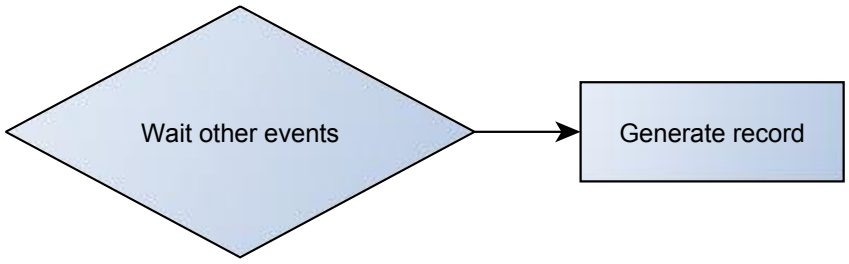

Figure 46 Monitoring operand logic

6.19.5 Operand On Hysteresis

Record is generated when actual value input increases from lower than low value to higher than high level value or decreasing from higher than high level to lower than low level.

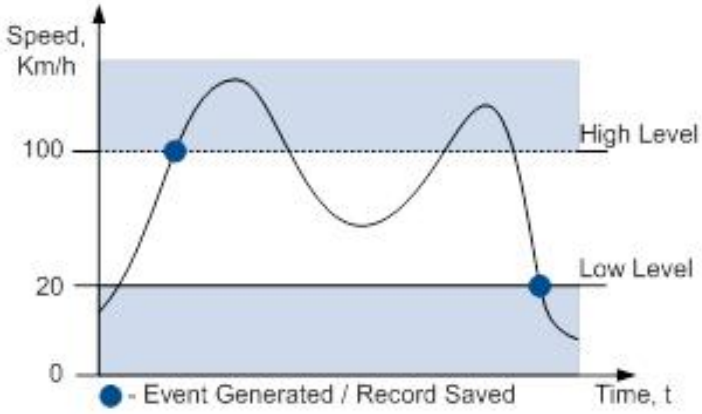

Figure 47 Hysteresis operand logic

6.19.6 Operand On Change

Record is generated when value changes.

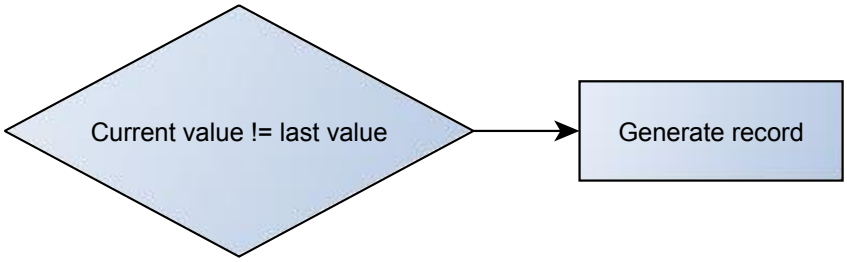

Figure 48 On change operand logic

6.19.7 Operand On Delta Change

Record is generated when value changes and absolute value of last value minus actual input value becomes equal or higher than high level value.

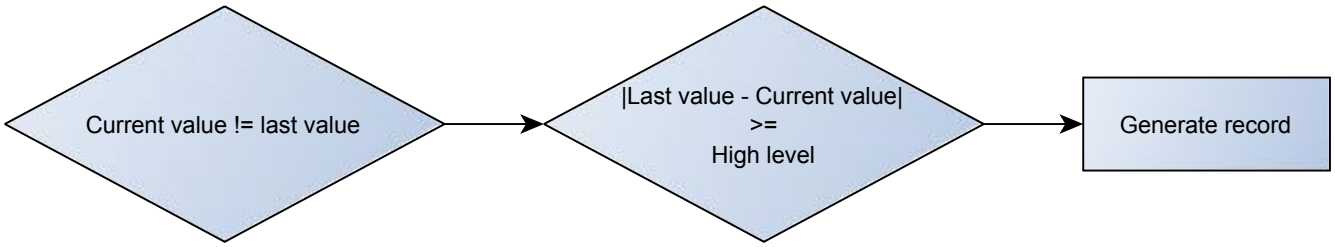

Figure 49 On Delta Change operand logic

6.19.8 Avg const (Averaging parameter description)

If avg const value is 10, new value must be present for 1 second to register change to new value. Internally sampling is done every 40ms, so 25 samples are taken in second. To configure 5 seconds averaging multiply 10 by 5 yielding 50. The same logic works even if device is in deep sleep mode.

Averaging follows RC exponential curves, see image bellow:

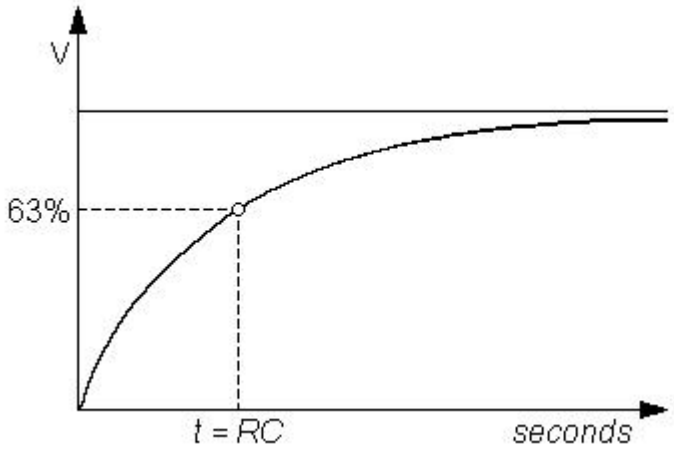

Figure 50 Averaging counting explanation

For Boolean values 5τ, values is used, that means value change is taken when new values is averaged to more then 99.3%.

6.19.9 OBD II (blue-tooth) and LVCAN I/O elements

In OBD II (blue-tooth) column are shown I/O elements which information can be obtained from OBD II blue-tooth dongle connected to FMB2YX device and in LVCAN column are shown I/O elements which information can be obtained from LV-CAN200 or ALL-CAN300 connected to FMB2YX device. All I/O configuration is the same as described in 5.17 chapter (I/O settings), except OBD II (blue-tooth) I/O element don't have averaging constant parameter.

Detailed description about LVAN I/O element configuration described in 8.5 chapter (FMB2YX ALL-CAN300 and LV-CAN200 parameters configuration).

7 SMS COMMAND LIST

Table 11. Common SMS/GPRS commands

Command	Description	Response
getinfo	Device runtime system information	Yes
getver	Returns code version, device IMEI, modem app version, RTC time, Init time, Uptime and BT MAC address.	Yes
getstatus	Modem Status information	Yes
getgps	Current GPS data, date and time.	Yes
getio	Readout analog input,digital input and output	Yes
ggps	Returns location information with Google maps link	Yes
readio #	Returns IO status, # AVL ID	Yes
cpureset	Resets device	No
getparam #	Returns selected parameter value, # param ID	Yes
setparam #:#	Sets selected parameter value. 1.# - first ID value. 2.# - New first Parameter Value 3.# - second ID value. 4.# - New second Parameter Value 5.# - third ID value. 6.# - New third Parameter Value SMS command of limited to 160 characters.	Yes
setparam #:#;#:#;…		
flush #,#,#,#,#,#,#	Redirects device to other server. 1.# - IMEI 2.# - APN 3.# - LOGIN 4.# - PASS 5.# - IP 6.# - PORT 7.# - MODE (0-TCP/1-UDP)	Yes
countrecs	Returns records number	Yes
deleterecords	Delete all records from SD card	Yes
setdigout ## Y1 Y2	Set digital output 1.# – 0 or 1 (0 - OFF or 1 – ON) for DOUT1 2.# – 0 or 1 (0 - OFF or 1 – ON) for DOUT2 Y1 – timeout value for DOUT1 if needed (in seconds) Y2 – timeout value for DOUT2 if needed (in seconds)	Yes
battery	Returns battery state info.	Yes
wdlog	Returns all information about “watch dogs” restarts.	Yes
defaultcfg	Load default configuration.	Yes
setkey # #	Add new or change current configuration keyword. If device is locked, keyword cannot be changed 1.# - old keyword (if adding new keyword space (view chapter 5.1.2)) 2.# - new keyword	Yes

Command	Description	Response
delkey #	Remove existing keyword. (If device is locked, keyword cannot be changed) # - old keyword	Yes
bbread #	Return black box information (HEX value of event ID and HEX value of custom data field (optional)). 1.# - returns entered number of latest events. When # is omitted the latest events are packed to single SMS.	Yes
bbinfo #	Return same information as bbread command but additional all events timestamp is written in HEX. 1.# - returns entered number of latest events. When # is omitted the latest events are packed to single SMS.	Yes
sdformat	Format SD card.	Yes

Table 12. SMS commands related to features

Command	Description	Response
fc_reset	Resets fuel consumption parameters	Yes
towingreact	Towing reactivation	Yes
auto_calibrate:set	Calibrate position if car accelerate straight to > 30 km/h for 5 sec.	Yes
auto_calibrate:get	returns the state of calibration	
odoset:#	Set total odometer value. # - new odometer value in km	Yes
odoget	Display current odometer value	Yes

Table 13. SMS commands related to blue-tooth

Command	Description	Response
btgetlist #	Returns requested blue-tooth list. # - 0,1 or 2 (0 – Discovered, 1 – Paired, 2 – Connected)	Yes
btscan	Starts blue-tooth scan.	Yes
btvisible #	Sets blue-tooth to visible with TMO. # - visibility TMO (from 1 to 255 seconds).	Yes
btrelease #	Disconnects from current device and pauses auto connect functionality for TMO # - none or TMO (from 1 to 255 seconds).	Yes
btunpair #	Unpair blue-tooth device. # - all, BT address (all – unpair all devices, BT address – unpair only specified MAC address).	Yes

Table 14. SMS commands related to OBD

Command	Description	Response
obdinfo	If connected with blue-tooth OBD dongle displays all available information from OBD.	Yes
faultcodes	If connected with blue-tooth OBD dongle display all visible fault codes.	Yes
cleardtc	Clears all vehicle stored fault codes.	No

Command	Description	Response
getvin	Get vehicle VIN code, if OBD dongle is connected.	Yes

Table 15. SMS commands related to LV-CAN200/ALL-CAN300

Command	Description	Response
lvcansetprog #	Set program number to LV-CAN200/ ALL-CAN300 that is connected to FMB2YX. # three digits number that identity vehicle.	Yes
lvcansimpletacho #	Add or remove simpletacho start byte. # - 0 or 1 (0 – don't add start byte, 1 – add start byte).	No
lvcangetprog	Get program number from LV-CAN200/ ALL-CAN300 that is connected to FMB2YX.	Yes
lvcangetinfo	Get information about connected LV-CAN200/ ALL-CAN300	Yes
lvcanclear #	Clear Total Mileage (counted), Engine Work Time (counted), Fuel Consumed (counted) parameters values. # - parameter (0 – Engine work time (counted), 1 – Fuel Consumed (counted), 2 – Vehicle Mileage (counted)).	Yes
allcanmode	Turn on ALL-CAN300 mode	Yes
lvcanmode	Turn on LV-CAN200 mode	Yes
lvcanfaultcodes	Read DTC fault codes	Yes

Parameter ID consists of 3 or 5 digits. Detailed list of parameters and IDs can be found in chapter 7 PARAMETER LIST.

Example: '**username password setparam 2001:wap**' will change configured APN.

Example: '**username password setparam 2001:wap;2002:user;2003:pass**' will change configured APN name, APN username and APN password. SMS command of limited to 160 characters.

Example: '**username password setdigout 10 60**' will set digital output ON for 60s.

7.1.1 getinfo

Response details	Description
RTC	RTC Time
Init	Device initialization time
UpTime	Total up time (in seconds)
PWR	Last restart reason
RST	Total restarts count
GPS	GPS receiver state. 0 – OFF, 1 – ON without fix, 2 – ON with fix, 3 – In sleep mode.
SAT	Average satellites
TTFF	Time To First Fix
TTLF	Time To Last Fix
NOGPS	How much time no GPS fix (h:min)
SR	Number of Sent Records
FG	Failed GPRS counter
FL	Failed link counter

Response details	Description
SMS	Sent SMS Counter
REC	Records Found – number of records in the memory.
MD	Data Mode state. 0 – Home and Stop, 1 – Home and Moving, 2 – Roaming and Stop, 3 – Roaming and Moving, 4 – Unknown and Stop, 5 – Unknown and Moving

Example: "RTC:2017/6/16 7:13 Init:2017/6/16 5:44 UpTime:4744s PWR:PwrVoltage RST:0 GPS:1 SAT:0 TTFF:0 TTLF:0 NOGPS: 1:18 SR:0 FG:200 FL:0 SMS:3 REC:42 MD:1".

7.1.2 getver

Response details	Description
Ver	Firmware version
GPS	Version of GPS module
Hw	Version of hardware
Mod	HW version modification
IMEI	Device IMEI
Init	Device initialization time
Uptime	Total up time (in seconds)
BT	Device MAC address

Example: "Ver:02.00.01_06 GPS:AXN_3.80_3333_16070400,0000,, Hw:FMB2YX Mod:4 IMEI:352094082042885 Init: 2017-6-16 5:54 Uptime: 16574 BT:31F5BFE66261".

7.1.3 getstatus

Response details	Description
Data Link	Indicate module connection to server at the moment: 0 – Not connected, 1 – connected
GPRS	Indicate if GPRS is available at the moment
Phone	Voice Call status: 0 – ready, 1 – unavailable, 2 – unknown, 3 –ringing, 4 – call in progress, 5 – asleep
SIM	SIM Status: 0-ready, 1-pin, 2-puk, 3-pin2, 4-puk2
OP	Connected to GSM Operator: numerical id of operator
Signal	GSM Signal Quality [0-5]
NewSMS	Indicate if new message received
Roaming	0 – Home Network, 1 – roaming
SMSFull	SMS storage is full? 0 – ok, 1 – SMS storage full
LAC	GSM Tower Location Area Code
Cell ID	GSM Tower Cell ID Code

Example: "Data Link: 0 GPRS: 1 Phone: 0 SIM: 0 OP: 24602 Signal: 5 NewSMS: 0 Roaming: 0 SMSFull: 0 LAC: 1 Cell ID: 3055".

7.1.4 getgps

Response details	Description
GPS	Indicates valid (1) or invalid (0) Gps data
Sat	Count of currently available satellites
Lat	Latitude (Last good Latitude)
Long	Longitude (Last good Longitude)
Alt	Altitude
Speed	Ground speed, km/h

Response details	Description
Dir	Ground direction, degrees
Date	Current date
Time	Current GMT time

Example: "GPS:1 Sat:0 Lat:54.666042 Long:25.225031 Alt:0 Speed:0 Dir:0 Date: 2017/6/16 Time: 12:52:30".

7.1.5 getio

Response details	Description
DI1	Digital input 1 value
DI2	Digital input 2 value
DI3	Digital input 3 value
AIN1	Analog input 1 value
DO1	Digital output 1 value
DO2	Digital output 2 value

Example: "DI1:0 DI2:0 DI3:0 AIN1:0 DO1:0 DO2:0".

7.1.6 ggps

Response details	Description
D	Date
T	Time
S	Actual Speed
C	Latitude (Last good Latitude), Longitude (Last good Longitude)
Url	Google Maps Link

Example (if no GNSS FIX): "GPS Data not Available. No GPS signal".

Example: D:17/1/9 T:12:52:30 S:0.00 C:54.666042, 25.225032 Url: http://maps.google.com/?q=54.666042,25.225032&om=1speed:0

7.1.7 readio

Response details	Description
ID	I/O element ID
Value	I/O Element value

Example (if wrong ID): "Not supported or not enabled IO element requested".

Example: "Param ID:239 Value:0".

7.1.8 getparam

Read parameter value. ID consists of 3 or 5 digits. A detailed list of parameters and identifiers can be found in this chapter next later.

Example: ‚getparam 2001' command will request APN name

Answer: Param ID:2001 Value:wap

7.1.9 setparam

Read parameter value. ID consists of 3 or 5 digits. A detailed list of parameters and identifiers can be found in this chapter next later.

Example: ‚setparam 2001:wap' will change configured APN name

Answer: Param ID:2001 Value:wap2

Example: 'setparam 2001:wap;2002:user;2003:pass' will change configured APN name, APN username and APN password. SMS command of limited to 160 characters.

7.1.10 flush #,#,#,#,#,#,#

Initiates all data sending by GPRS to specified target server. Comma separated parameters go as numbered:

1.# - IMEI
2.# - APN
3.# - GPRS LOGIN
4.# - GPRS PASSWORD
5.# - IP
6.# - PORT
7.# - MODE (0-TCP/1-UDP)

Parameters are separated by comma (no spaces needed). In case you don't need to enter parameter (APN Login/ APN Pass) – do not put space, simply put comma and write next parameter.

Parameters are separated by comma (no spaces needed). In case you don't need to enter parameter (APN Login/ APN Pass) – do not put space, simply put comma and write next parameter.

Example: opa opa flush 353976012555151,banga,,,212.47.99.62,12050,0

Response details	Description
FLUSH SMS Accepted	FLUSH SMS Accepted
# records found on FLASH	Number of records found on FLASH
Minimum Records to Send: #	Number of minimum saved records to send
GPRS Enabled: #	State of the GPRS connection, 0 – disabled; 1 – enabled
Time Sync: #	Indicates time synchronization on the device, 0 – not synchronized; 1 – synchronized

Example: "FLUSH SMS Accepted. 11 records found on FLASH. Minimum Records to Send: 1. GPRS Enabled: 1. Time Sync: 1.".

7.1.11 countrecs

Returns currently records number in SD card or device memory.

Example (if more that 100): "more then 100 records found".

Example: "25 records found".

7.1.12 deleterecords

Delete all records from SD card or device memory.

7.1.13 setdigout

Sets digital outputs to ON or OFF state (timeout is valid only when DOUT state is changing from OFF to ON)

Example: 'setdigout 01 30 60' will set DOUT1 to low level (for infinite time) and DOUT2 to high level for 60 seconds,

'setdigout 11' will set DOUT1 and DOUT2 to high level for infinite time.

Example: 'setdigout 1 60' will set DOUT1 to high level for 60 seconds.

7.1.14 battery

Response details	Description
BatState	Battery connected (1) or disconnected (0) from device

Response details	Description
FSMState	Current battery state
ChargerIC	Battery charging status
ExtV	External Voltage
BatV	Battery voltage
BatI	Battery charging current

Example: "BatState: 1 FSMState: ACTIVE ChargerIC: OFF ExtV: 11796 BatV: 3942 BatI: 0".

7.1.15 fc_reset

Reset GPS fuel consumption value.

Example: "Fuel Consumption parameters reseted".

7.1.16 towingreact

Reactivates Towing Detection to initial state (does not wait for ignition to be OFF). Useful when generated false Towing event and needs reactivation.

7.1.17 odoset:#

Set new total odometer value in km.

Example: "Saved Odometer Value: 5000 km".

7.1.18 odoget

Get total odometer value in km.

Example: "Current Odometer Value:5000 km".

7.1.19 btgetlist

btgetlist command needs argument what list should be printed!

btgetlist 0; device will respond with BT_LIST_Discovered
btgetlist 1; device will respond with all paired devices
btgetlist 2; device will respond with connected blutetooth device

Note: Without argument it is always 0 i.e **BT_LIST_Discovered**
In FW 01.00.23 btgetlist (without args) will not respond (as unknown command).

7.1.20 obdinfo

Response details	Description
LIST of OBD info	Protocol, VIN, AdaptiveTiming value, requested PID counter, OBD application state, available vehicle PIDs, mil status, number of DTCs

Example:
"Prot:0,VIN:N/A,TM:10,CNT:0,ST:OFF,P1:0x0,P2:0x0,P3:0x0,P4:0x0,MIL:0,DTC:0,ID0,Hdr:0,Phy:0".

7.1.21 faultcodes

Response details	Description
LIST	Returns list of fault codes; response when no faults: "No fault codes detected."

Example: "P0100,P0200,P0300,C0300,B0200,U0100".

7.1.22 setkey #

"setkey <oldkeyword> <newkeyword>" - Set new or change the keyword. Configuration should be not locked.

Example: New keyword (set):
<name>{space}<pass>{space}setkey{space}{space}<newkeyword>

Change keyword (change):
<name>{space}<pass>{space}setkey{space}<oldkeyword>{space}<newkeyword>

7.1.23 delkey #

"delkey <keyword>" - Deletes current keyword. Configuration keyword should be configured and not locked.

Example:
<name>{space}<pass>{space}delkey{space}<keyword>

7.1.24 bbread

describes start offset and is an optional field. # of value 20 means that blackbox data is requested starting from 20th latest event. When # is omitted the latest events are packet to single SMS.

Example: X1:Y1,X2:Y2,…,Xn:Yn, where Xn – HEX value of event ID. Yn – HEX value of custom data field (optional).

7.1.25 bbinfo

describes start offset and is an optional field. # of value 20 means that blackbox data is requested starting from 20th latest event. When # is omitted the latest events are packet to single SMS.

Example: X1-Y1:Z1,X2-Y2:Z2,…,Xn-Yn:Zn, where Xn – timestamp in HEX. Yn – HEX value of event ID. Zn – HEX value of custom data field (optional).

7.1.26 sdformat

Format sd card (deleta all information from SD card).

7.1.27 lvcansetprog

Set program number to LV-CAN200 or ALL-CAN300 which is connected to FMB2YX.

7.1.28 lvcangetprog

Get currently using program number from LV-CAN200 or ALL-CAN300.

7.1.29 lvcangetinfo

Response details	Description
LIST of LV-CAN200 or ALL-CAN300 info	Program number, SW creation date, SW revision, Kern version, Option and its ID, Simple tacho configuration.

7.1.30 lvcanclear

It is possible to clear Total Mileage (counted), Engine Work Time (counted), Fuel Consumed (counted) parameters with following SMS command.
SMS text:"lvcanclear #"

Possible values of #:

0 – Engine work time (counted);
1 – Fuel Consumed (counted);
2 – Vehicle Mileage (counted);

7.1.31 allcanmode

Turn on ALL-CAN300 mode.

7.1.32 lvcanmode

Turn on LV-CAN200 mode.

7.1.33 lvcanfaultcodes

Possible OK answers:

1. No fault codes detected.
2. 2:C0300,1:P0300,3:B0200,4:U0100“

```
        ALL-CAN300 detected 4 DTC codes:
- ABS controller    C0300;
- ENGINE controller P0300;
- SRS controller     B0200;
- TCM controller    U0100
```

Possible error answers:

1. Ignition is off (DTC reading is not possible);
2. DTC not supported;
3. Communication error;
4. Error – diagnostic computer connected;
5. Error – engine is working;

8 Debug mode

FMB2YX is able to transmit its current state when connected to PC using USB cable. It is used to detect errors and provide information to find possible solutions when operating as unexpected. Download Terminal from:

http://avl1.teltonika.lt/Downloads/Software/Terminal.zip.

After launching terminal change baud rate to 115200 and handshaking – none. Select COM port which is assigned to "Virtual COM Port". Click on 'Start Log' button and save a new file. Then click 'Connect' to start receiving messages from FMB2YX.

Also you can log NMEA data directly. To get NMEA data, simply enter the following command into the command field: **.log_nmea:1$0a**.

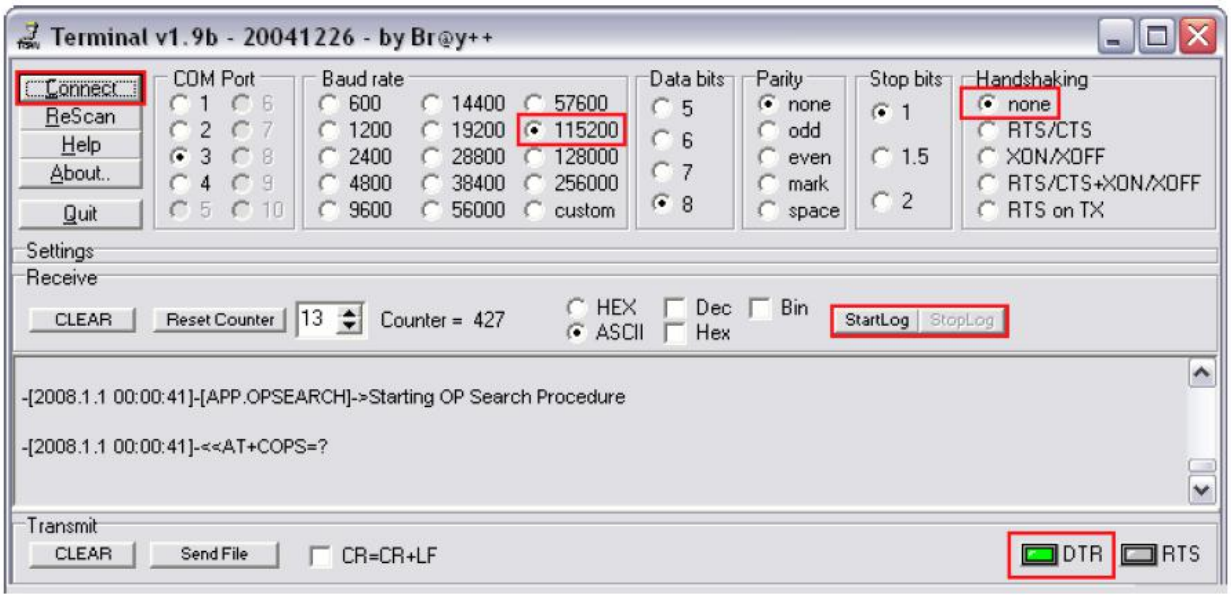

Figure 51. Terminal window for logging

9 Parameter List

9.1 Parameters value types

S8 – Signed Char
S8[n] – String of n Char
Uint8 – Unsigned Char
Uint16 – Unsigned Short
S32 – Signed Integer
Uint32 – Unsigned Integer
Uint64 – Unsigned Long Long Integer

9.2 System parameters

9.2.1 Sleep Mode (ID=102)

Device has three sleep modes: GPS sleep, Deep Sleep and Online Deep Sleep mode. While sleep is disabled (value 0) module will never enter sleep mode, in sleep mode (value 1) module reduces level of power usage by turning GPS module to sleep, in deep sleep mode (value 2) module turns GPS module to sleep and device is deregistered from network (note, that FMB2YX do not receive SMS while in deep sleep), online Deep Sleep mode (value 3) device works as in Deep Sleep mode, but without deregistering from GSM network. GSM part stays powered, so this increases power consumption. In this mode, device should received/send SMS and make/receive calls. Also not closes GPRS context, if previously opened.

Minimum value	Maximum value	Default value	Goes with (depends on) parameters	Value type
0	3	2	Sleep timeout (ID=103)	Uint8

9.2.2 Sleep timeout (ID=103)

Sleep timeout is time after which FMB2YX goes to GPS sleep, Deep Sleep or Online Deep Sleep if other requirements are met. It is measured in minutes.

Minimum value	Maximum value	Default value	Goes with (depends on) parameters	Value type
1	3000	10	Sleep Mode (ID=102)	Uint8

9.2.3 Movement Source (ID=100)

Device can operate and change its working mode according to motion detection source: ignition (value 0), movement sensor (value 1), GPS (value 2), CAN speed (value 3).

Minimum value	Maximum value	Default value	Goes with (depends on) parameters	Value type
0	3	1	-	Uint8

9.2.4 Static Navigation (ID=106)

When static navigation is enabled, FMB2YX filters out GPS jumps, when it is not moving. When it is disabled, it does not make any changes to collected GPS data.

Minimum value	Maximum value	Default value	Goes with (depends on) parameters	Value type
0	1	1	Static Navigation Settings (ID=112)	Uint8

9.2.5 Analog input value range (ID=111)

Sets AIN measurement range: 0 – 10 V, 0 – 30 V (for now 0 – 10 V range works same as 0 – 30 V range).

Minimum value	Maximum value	Default value	Goes with (depends on) parameters	Value type
0	1	0		Uint8

9.2.6 Static Navigation Settings (ID=112)

Sets static navigation exit (movement) detection sources. 1 – Movement Source, 2 – Ignition Source, 3 – both (Movement or ignition).

Minimum value	Maximum value	Default value	Goes with (depends on) parameters	Value type
1	3	1	Static Navigation (ID=106) Movement Source (ID=100) Ignition settings (ID=101)	Uint8

9.2.7 Saving/Sending without time synchronization (ID=107)

When this feature is enabled (value = 1), then records can be saved and sent to server without time synchronization.

Minimum value	Maximum value	Default value	Goes with (depends on) parameters	Value type
0	1	1		Uint8

9.2.8 GNSS Source (ID=109)

This parameter sets Satellite System, available values:

0 – Undefined	4 – Galileo only	9 – GPS+Beidou	14–GPS+Galileo +Glonass
2 – Glonass only	5 – Galileo+Beidou	10 – GPS+Glonass	15–GPS,Galileo, Glonass and Beidou and not allowed
1– Beidou only	6 – Galileo+Glonass	12 – GPS+Galileo	
3 – Galileo+Beidou	8 – GPS only	13 – GPS+ Galileo + Beidou	

Minimum value	Maximum value	Default value	Goes with (depends on) parameters	Value type
0	15	10		Uint8

9.2.9 Ignition settings (ID=101)

This parameter sets ignition source available values:

1 – Digital Input	5 – Digital Input and Power Voltage	9 – Digital Input and Engine RPM	13 – Digital Input, Power Voltage and Engine RPM

2– Accelerometer	6 – Accelerometer and Power Voltage	10 – Accelerometer and Engine RPM	14 – Accelerometer, Power Voltage and Engine RPM
3 – Digital Input and Accelerometer	7 – Digital Input, Accelerometer and Power voltage	11 – Digital Input, Accelerometer and Engine RPM	15 – Digital Input, Accelerometer, Power voltage and Engine RPM
4 – Power voltage	8 – Engine RPM	12 – Power voltage and Engine RPM	

Minimum value	Maximum value	Default value	Goes with (depends on) parameters	Value type
1	15	4	High voltage level (ID=104) Low voltage level (ID=105) Movement Start Delay(s) (ID=19001) Movement Stop Delay(s) (ID=19002)	Uint8

9.2.10 High voltage level (ID=104)

Sets high level of voltage.

Minimum value	Maximum value	Default value	Goes with (depends on) parameters	Value type
0 (but higher than low level)	30000	30000	Ignition settings (ID=101) Low voltage level (ID=105)	Uint16

9.2.11 Low voltage level (ID=105)

Sets low level of voltage.

Minimum value	Maximum value	Default value	Goes with (depends on) parameters	Value type
0	29999 (but lower than high level)	13200	Ignition settings (ID=101) High voltage level (ID=104)	Uint16

9.2.12 Movement Start Delay(s) (ID=19001)

What Accelerometer Ignition source delay will be after Ignition on.

Minimum value	Maximum value	Default value	Goes with (depends on) parameters	Value type
1	60	1	Ignition settings (ID=101) Movement Stop Delay(s) (ID=19002)	Uint8

9.2.13 Movement Stop Delay(s) (ID=19002)

What Accelerometer Ignition source delay will be after Ignition off.

Minimum value	Maximum value	Default value	Goes with (depends on) parameters	Value type
5	60	60	Ignition settings (ID=101) Movement Start Delay(s) (ID=19001)	Uint16

9.2.14 Led indication (ID=108)

Sets led indication: 0 – disabled, 1 – enabled

Minimum value	Maximum value	Default value	Goes with (depends on) parameters	Value type
0	1	1		Uint8

9.2.15 Synchronization settings (ID=900)

Settings used for device internal time synchronization: 0 – GPS only, 1 – NITZ and NTP, 2 – NTP, 3 – NITZ.

Minimum value	Maximum value	Default value	Goes with (depends on) parameters	Value type
0	3	1	NTP Resync (ID=901) NTP server 1 (ID=902) NTP server 2 (ID=903)	Uint8

9.2.16 NTP Resync (ID=901)

Periodical time synchronization. If not zero FMB2YXx will resynchronize time once set period expires.

Minimum value	Maximum value	Default value	Goes with (depends on) parameters	Value type
0	24	0	Synchronization settings (ID=900) NTP server 1 (ID=902) NTP server 2 (ID=903)	Uint8

9.2.17 NTP server 1 (ID=902)

Minimum value	Maximum value	Default value	Goes with (depends on) parameters	Value type
0	55 char string	avl1.teltonika.lt	Synchronization settings (ID=900) NTP Resync (ID=901) NTP server 2 (ID=903)	S8[55]

9.2.18 NTP server 2 (ID=903)

Minimum value	Maximum value	Default value	Goes with (depends on) parameters	Value type
0	55 char string	pool.ntp.org	Synchronization settings (ID=900) NTP Resync (ID=901) NTP server 1 (ID=902)	S8[55]

9.2.19 Battery charge mode (ID=110)

Sets when charging is allowed: 0 – On Need, 1 – After Ignition ON.

Minimum value	Maximum value	Default value	Goes with (depends on) parameters	Value type
0	1	0		Uint8

9.3 GPRS parameters

9.3.1 Sorting (ID=1002)

Record sorting parameter is responsible for record sorting order. Value of 0 arranging data starting from newest, while value of 1 arranging data starting from oldest.

Minimum value	Maximum value	Default value	Goes with (depends on) parameters	Value type
0	1	0	Open Link Timeout (ID=1000) Server Response Timeout (ID=1001)	Uint8

9.3.2 Open Link Timeout (ID=1000)

Defines for how many seconds device will keep connection to the server after successful data transfer while waiting for a new record.

Minimum value	Maximum value	Default value	Goes with (depends on) parameters	Value type
30	259200	30	Sorting (ID=1002) Server Response Timeout (ID=1001)	Uint32

9.3.3 Server Response Timeout (ID=1001)

Defines time period (in seconds) for server response to sent records.

Minimum value	Maximum value	Default value	Goes with (depends on) parameters	Value type
5	300	30	Sorting (ID=1002) Open Link Timeout (ID=1000)	Uint16

ATTENTION! Some GSM operators may disconnect the device from an active data link if the device doesn't send any data for a very long time, even if active data link timeout is set to maximum value. The amount of time that an operator keeps the link open depends solely on the operator. For example, if active data link timeout is set to maximum, 259200 seconds (72 hours), and the device sends data to server every 86400 seconds (24 hours), the operator might disconnect the link earlier and the device will have to connect to the server anew. This may cost extra, depending on the operator GPRS data charge. It is strongly recommended, when using active data link timeout, that data sending to the server should not be very rare (24 hours or more). If data sending is more frequent, then the operator will not disconnect the device form the server.

9.3.4 SIM1 GPRS content activation (ID=2000)

Parameter allows or does not allow GPRS usage with SIM1. If GPRS is not allowed value is 0, if GPRS is allowed value is 1.

Minimum value	Maximum value	Default value	Goes with (depends on) parameters	Value type
0	1	1	SIM1 SIM1 APN Name (ID=2001) SIM1 SIM1 APN username (ID=2002) SIM1 SIM1 APN Password (ID=2003)	Uint8

9.3.5 SIM1 APN Name (ID=2001)

Parameter defines SIM1 GPRS Access Point Name.

Minimum value	Maximum value	Default value	Goes with (depends on) parameters	Value type
0	32 char string	Empty	SIM1 SIM1 GPRS content activation (ID=2000) SIM1 SIM1 APN username (ID=2002) SIM1 SIM1 APN Password (ID=2003)	S8[32]

9.3.6 SIM1 APN username (ID=2002)

Parameter defines SIM1 APN username. In case operator does not use username for login, value should be empty.

Minimum value	Maximum value	Default value	Goes with (depends on) parameters	Value type
0	30 char string	Empty	SIM1 SIM1 GPRS content activation (ID=2000) SIM1 SIM1 APN Name (ID=2001) SIM1 SIM1 APN Password (ID=2003)	S8[30]

9.3.7 SIM1 APN Password (ID=2003)

Parameter defines SIM1 APN password. In case operator does not use password for login, value should be empty.

Minimum value	Maximum value	Default value	Goes with (depends on) parameters	Value type
0	30 char string	Empty	SIM1 SIM1 GPRS content activation (ID=2000) SIM1 SIM1 APN Name (ID=2001) SIM1 SIM1 APN username (ID=2002)	S8[30]

9.3.8 Domain (ID=2004)

Parameter defines AVL data destination server IP address. Example: 212.47.99.62

Minimum value	Maximum value	Default value	Goes with (depends on) parameters	Value type
0	55 char string	Empty	SIM1 GPRS content activation (ID=2000)	S8[55]

9.3.9 Target Server Port (ID=2005)

Parameter defines AVL data destination server port number. Example: 12050

Minimum value	Maximum value	Default value	Goes with (depends on) parameters	Value type
0	65535	0	SIM1 GPRS content activation (ID=2000)	Uint16

9.3.10 Protocol (ID=2006)

Parameter defines GPRS data transport protocol. Module can use TCP or UDP transport protocol to send data to server. For TCP protocol value is 0, for UDP protocol value is 1.

Minimum value	Maximum value	Default value	Goes with (depends on) parameters	Value type
0	1	0	SIM1 GPRS content activation (ID=2000)	Uint8

9.3.11 Backup Server Domain (ID=2007)

Parameter defines AVL data destination backup server IP address. Example: 212.47.99.61

Minimum value	Maximum value	Default value	Goes with (depends on) parameters	Value type
0	55 char string	Empty	SIM1 GPRS content activation (ID=2000) Backup Server Mode (ID=2010)	S8[55]

9.3.12 Backup Server Port (ID=2008)

Parameter defines AVL data destination backup server port number. Example: 12051

Minimum value	Maximum value	Default value	Goes with (depends on) parameters	Value type
0	65535	0	SIM1 GPRS content activation (ID=2000) Backup Server Mode (ID=2010)	Uint16

9.3.13 Backup Server Protocol (ID=2009)

Parameter defines GPRS data transport protocol. Module can use TCP or UDP transport protocol to send data to backup server. For TCP protocol value is 0, for UDP protocol value is 1.

Minimum value	Maximum value	Default value	Goes with (depends on) parameters	Value type
0	1	0	SIM1 GPRS content activation (ID=2000) Backup Server Mode (ID=2010)	Uint8

9.3.14 Backup Server Mode (ID=2010)

Sets backup server mode: 0 – Disable (backup server not used), 1 – Backup (sent to backup server if main server not available), 2 – Duplicate (send records to both servers).

Minimum value	Maximum value	Default value	Goes with (depends on) parameters	Value type
0	2	0	SIM1 GPRS content activation (ID=2000)	Uint8

9.3.15 FOTA WEB status (ID=13003)

Parameter allows or does not allow connection to FOTA WEB server.

Minimum value	Maximum value	Default value	Goes with (depends on) parameters	Value type
0	1	1	FOTA WEB Domain (ID=13000) FOTA WEB port (ID=13001) FOTA WEB Period (min) (ID=13002)	Uint8

9.3.16 FOTA WEB Domain (ID=13000)

FOTA WEB server IP or DNS address.

Minimum value	Maximum value	Default value	Goes with (depends on) parameters	Value type
0	55 char string	85.206.140.106	FOTA WEB status (ID=13003) FOTA WEB port (ID=13001) FOTA WEB Period (min) (ID=13002)	S8[55]

9.3.17 FOTA WEB port (ID=13001)

FOTA WEB server port.

Minimum value	Maximum value	Default value	Goes with (depends on) parameters	Value type
0	65535	5000	FOTA WEB status (ID=13003) FOTA WEB Domain (ID=13000) FOTA WEB Period (min) (ID=13002)	Uint16

9.3.18 FOTA WEB Period (min) (ID=13002)

Period defines how often device is going to connect to server.

Minimum value	Maximum value	Default value	Goes with (depends on) parameters	Value type
30	65535	720	FOTA WEB status (ID=13003) FOTA WEB Domain (ID=13000) FOTA WEB port (ID=13001)	Uint16

9.4 SMS/Call settings

9.4.1 SMS data sending settings (ID=3000)

Parameter allows or does not allow sending AVL data using binary SMS. If SMS use is not allowed value is 0 and 1 if SMS use is allowed.

Minimum value	Maximum value	Default value	Goes with (depends on) parameters	Value type
0	1	0	Data send number (ID=3001)	Uint8

9.4.2 Data send number (ID=3001)

In this field are written GSM numbers, to which will be sent Data SMS.

Minimum value	Maximum value	Default value	Goes with (depends on) parameters	Value type
Empty	16 digits	-	SMS data sending settings (ID=3000)	S8[16]

9.4.3 Authorized phone numbers (ID=4000-4199)

If at least one number is entered then only those number can send messages to device.
Example: +37060012346

Minimum value	Maximum value	Default value	Goes with (depends on) parameters	Value type
Empty	16 digits	-	SMS Login (ID=3003) SMS Password (ID=3004) Digital Output control (ID=12000)	S8[16]

9.4.4 GSM Predefined Numbers (ID=6000-6009)

In this field GSM numbers are written, to which will be sent “Event SMS” text message.
Example: +37060012346

Minimum value	Maximum value	Default value	Goes with (depends on) parameters	Value type
Empty	16 digits	-	GSM number index (ID=3008) Green driving Send SMS to (ID=7034) Over Speeding Send SMS To (ID=7032) Trip Send SMS To (ID=7031) AutoGeofence Send SMS to (ID=7030) Send sms to #1-5 Geozone (ID=7025-7029), #6-50 Geozone (ID=7071-7115) Unplug send sms to (ID=7067) Towing Make Call(Sms Event Number ID) (ID=11604) Towing Send SMS (ID=7066) Crash sms send to (ID=7068) Excessive idling Send SMS To (ID=7033) I/O#1 send SMS (ID=7000) OBD II (blue-tooth) property parameters Send SMS to (ID=7038-7068)	S8[16]

9.4.5 SMS Login (ID=3003)

User login is used to ensure module security. Used in every SMS that is sent to device. Example: ba321

Minimum value	Maximum value	Default value	Goes with (depends on) parameters	Value type
Empty	5 char	-	SMS Password (ID=3004) SMS Event Time Zone (ID=3006)	S8[5]

9.4.6 SMS Password (ID=3004)

User password is used to ensure module security. Used in every SMS that is sent to device. Example: ab123

Minimum value	Maximum value	Default value	Goes with (depends on) parameters	Value type
Empty	5 char	-	SMS Login (ID=3003) SMS Event Time Zone (ID=3006)	S8[5]

9.4.7 Incoming call action (ID=3005)

Parameter defines action during call: 0 – do nothing, 1 – hang up, 2 – report position, 3 – Not used, 4 –Auto Answer (HF).

Minimum value	Maximum value	Default value	Goes with (depends on) parameters	Value type
0	4	0		Uint8

9.4.8 SMS Event Time Zone (ID=3006)

Time zone which will be used in eventual SMS messages.

Minimum value	Maximum value	Default value	Goes with (depends on) parameters	Value type
-720	840	0	SMS Password (ID=3004) SMS Login (ID=3003)	Uint16

9.4.9 Hands Free Call Settings (ID=3007)

Parameter defines hands free call trigger:

FMB2YX: 0 – Disable, 1 – DIN1, 2 – Crash event, 3 – DIN1 and Crash event 4 – DIN2, 5 - DIN1 and DIN2, 6 – Crash event and DIN2, 7 – DIN1, Crash event and DIN2.

Minimum value	Maximum value	Default value	Goes with (depends on) parameters	Value type
0	7	0	GSM number index (ID=3008)	Uint16

9.4.10 GSM number index (ID=3008)

Define to what number will be called after configured call trigger is activated. 0 – Disable, 1-10 – call to configured GSM Predefined Number.

Minimum value	Maximum value	Default value	Goes with (depends on) parameters	Value type
0	10	0	Hands Free Call Settings (ID=3007) GSM Predefined Numbers (ID=6000-6009)	Uint8

9.5 GSM Operators

9.5.1 SIM1 Roaming Operator List (ID=5000-5049)

Parameter defines roaming operator list for SIM 1. According to this list module selects operating profile. If roaming operator list is left empty, FMB2YX will automatically detect home operator. If home operator will be written to roaming operator list any part, it will be detected as home operator, not roaming. All other written operators are Preferred Roaming Operator Codes.

Minimum value	Maximum value	Default value	Goes with (depends on) parameters	Value type
0	999999	0	Black List (ID=5500-5549)	Uint32

9.5.2 Black List (ID=5500-5549)

Operator Black List - if user wants that FMB2YX do not connect and work with a particular operator it must be written to Operator Black List.

Minimum value	Maximum value	Default value	Goes with (depends on) parameters	Value type
0	999999	0	Roaming Operator List (ID=5000-5049)	Uint32

9.6 Data Acquisition Modes parameters

9.6.1 Home Network GSM operator code "Vehicle on STOP" parameters

9.6.1.1 Min Period (ID=10000)

This parameter indicates time interval in seconds in order to acquire new record. If value is 0 it means no records by min period will be saved.

Minimum value	Maximum value	Default value	Goes with (depends on) parameters	Value type
0	2592000	3600	Min Saved Records (ID=10004) Send Period (ID=10005)	Uint32

9.6.1.2 Min Saved Records (ID=10004)

This parameter defines minimum number of records in one data packet that can be sent to server. It has higher priority than Data Send Period (ID=10005).

Minimum value	Maximum value	Default value	Goes with (depends on) parameters	Value type
1	255	1	Min Period (ID=10000) Send Period (ID=10005)	Uint8

9.6.1.3 Send Period (ID=10005)

This parameter indicates frequency (time interval in seconds) of sending data to server.

Minimum value	Maximum value	Default value	Goes with (depends on) parameters	Value type
0	2592000	120	Min Period (ID=10000) Min Saved Records (ID=10004)	Uint32

9.6.2 Home Network GSM operator code "Vehicle MOVING" parameters

9.6.2.1 Min Period (ID=10050)

This parameter indicates time interval in seconds in order to acquire new record. If value is 0 it means no records by min period will be saved.

Minimum value	Maximum value	Default value	Goes with (depends on) parameters	Value type
0	2592000	300	Min Distance (ID=10051) Min Angle (ID=10052) Min Speed Delta (ID=10053) Min Saved Records (ID=10054) Send Period (ID=10055)	Uint32

9.6.2.2 Min Distance (ID=10051)

This parameter indicates distance in meters in order to acquire new record. Record is stored when the distance between previous records is greater than parameters value. If value is 0 it means no records by min distance will be saved.

Minimum value	Maximum value	Default value	Goes with (depends on) parameters	Value type
0	65535	100	Min Period (ID=10050) Min Angle (ID=10052) Min Speed Delta (ID=10053) Min Saved Records (ID=10054) Send Period (ID=10055)	Uint16

9.6.2.3 Min Angle (ID=10052)

This parameter indicates angle in degrees in order to acquire new record. If angle difference between last recorded coordinate and current position is greater than defined value, new record is stored. This parameter is operational, when speed is higher than 10km/h. If value is 0 it means no records by min angle will be saved.

Minimum value	Maximum value	Default value	Goes with (depends on) parameters	Value type
0	180	10	Min Period (ID=10050) Min Distance (ID=10051) Min Speed Delta (ID=10053) Min Saved Records (ID=10054) Send Period (ID=10055)	Uint8

9.6.2.4 Min Speed Delta (ID=10053)

This parameter indicates speed difference in order to acquire new record. If speed difference between last recorded coordinate and current position is greater than defined value, new record is stored. If value is 0 it means no records by min speed delta will be saved.

Minimum value	Maximum value	Default value	Goes with (depends on) parameters	Value type
0	255	10	Min Period (ID=10050) Min Distance (ID=10051)	Uint8

			Min Angle (ID=10052) Min Saved Records (ID=10054) Send Period (ID=10055)	

9.6.2.5 Min Saved Records (ID=10054)

This parameter defines minimum number of records in one data packet that can be sent to server. It has higher priority than Data Send Period (ID=10055).

Minimum value	Maximum value	Default value	Goes with (depends on) parameters	Value type
1	255	1	Min Period (ID=10050) Min Distance (ID=10051) Min Angle (ID=10052) Min Speed Delta (ID=10053) Send Period (ID=10055)	Uint8

9.6.2.6 Send Period (ID=10055)

This parameter indicates frequency (time interval in seconds) of sending data to server.

Minimum value	Maximum value	Default value	Goes with (depends on) parameters	Value type
0	2592000	120	Min Period (ID=10050) Min Distance (ID=10051) Min Angle (ID=10052) Min Speed Delta (ID=10053) Min Saved Records (ID=10054)	Uint32

9.6.3 Roaming Network GSM operator code "Vehicle on STOP" parameters

9.6.3.1 Min Period (ID=10100)

This parameter indicates time interval in seconds in order to acquire new record. If value is 0 it means no records by min period will be saved.

Minimum value	Maximum value	Default value	Goes with (depends on) parameters	Value type
0	2592000	3600	Min Saved Records (ID=10104) Send Period (ID=10105)	Uint32

9.6.3.2 Min Saved Records (ID=10104)

This parameter defines minimum number of records in one data packet that can be sent to server. It has higher priority than Data Send Period (ID=10105).

Minimum value	Maximum value	Default value	Goes with (depends on) parameters	Value type
1	255	1	Min Period (ID=10100) Send Period (ID=10105)	Uint8

9.6.3.3 Send Period (ID=10105)

This parameter indicates frequency (time interval in seconds) of sending data to server.

Minimum value	Maximum value	Default value	Goes with (depends on) parameters	Value type
0	2592000	120	Min Period (ID=10100) Min Saved Records (ID=10104)	Uint32

9.6.4 Roaming Network GSM operator code "Vehicle MOVING" parameters

9.6.4.1 Min Period (ID=10150)

This parameter indicates time interval in seconds in order to acquire new record. If value is 0 it means no records by min period will be saved.

Minimum value	Maximum value	Default value	Goes with (depends on) parameters	Value type
0	2592000	300	Min Distance (ID=10151) Min Angle (ID=10152) Min Speed Delta (ID=10153) Min Saved Records (ID=10154) Send Period (ID=10155)	Uint32

9.6.4.2 Min Distance (ID=10151)

This parameter indicates distance in meters in order to acquire new record. Record is stored when the distance between previous records is greater than parameter's value. If value is 0 it means no records by min distance will be saved.

Minimum value	Maximum value	Default value	Goes with (depends on) parameters	Value type
0	65535	100	Min Period (ID=10150) Min Angle (ID=10152) Min Speed Delta (ID=10153) Min Saved Records (ID=10154) Send Period (ID=10155)	Uint16

9.6.4.3 Min Angle (ID=10152)

This parameter indicates angle in degrees in order to acquire new record. If angle difference between last recorded coordinate and current position is greater than defined value, new record is stored. This parameter is operational, when speed is higher than 10km/h. If value is 0 it means no records by min angle will be saved.

Minimum value	Maximum value	Default value	Goes with (depends on) parameters	Value type
0	180	10	Min Period (ID=10150) Min Distance (ID=10151) Min Speed Delta (ID=10153) Min Saved Records (ID=10154) Send Period (ID=10155)	Uint8

9.6.4.4 Min Speed Delta (ID=10153)

This parameter indicates speed difference in order to acquire new record. If speed difference between last recorded coordinate and current position is greater than defined value, new record is stored. If value is 0 it means no records by min speed delta will be saved.

Minimum value	Maximum value	Default value	Goes with (depends on) parameters	Value type
0	255	10	Min Period (ID=10150) Min Distance (ID=10151) Min Angle (ID=10152) Min Saved Records (ID=10154) Send Period (ID=10155)	Uint8

9.6.4.5 Min Saved Records (ID=10154)

This parameter defines minimum number of records in one data packet that can be sent to server. It has higher priority than Data Send Period (ID=10105).

Minimum value	Maximum value	Default value	Goes with (depends on) parameters	Value type
1	255	1	Min Period (ID=10150) Min Distance (ID=10151) Min Angle (ID=10152) Min Speed Delta (ID=10153) Send Period (ID=10155)	Uint8

9.6.4.6 Send Period (ID=10155)

This parameter indicates frequency (time interval in seconds) of sending data to server.

Minimum value	Maximum value	Default value	Goes with (depends on) parameters	Value type
0	2592000	120	Min Period (ID=10150) Min Distance (ID=10151) Min Angle (ID=10152) Min Speed Delta (ID=10153) Min Saved Records (ID=10154)	Uint32

9.6.5 Unknown Network GSM operator code “Vehicle on STOP” parameters

9.6.5.1 Min Period (ID=10200)

This parameter indicates time interval in seconds in order to acquire new record. If value is 0 it means no records by min period will be saved.

Minimum value	Maximum value	Default value	Goes with (depends on) parameters	Value type
0	2592000	3600	Min Saved Records (ID=10204) Send Period (ID=10205)	Uint32

9.6.5.2 Min Saved Records (ID=10204)

This parameter defines minimum number of records in one data packet that can be sent to server. It has higher priority than Data Send Period (ID=10205).

Minimum value	Maximum value	Default value	Goes with (depends on) parameters	Value type
1	255	1	Min Period (ID=10200) Send Period (ID=10205)	Uint8

9.6.5.3 Send Period (ID=10205)

This parameter indicates frequency (time interval in seconds) of sending data to server.

Minimum value	Maximum value	Default value	Goes with (depends on) parameters	Value type
0	2592000	120	Min Period (ID=10200) Min Saved Records (ID=10204)	Uint32

9.6.6 Unknown Network GSM operator code "Vehicle MOVING" parameters

9.6.6.1 Min Period (ID=10250)

This parameter indicates time interval in seconds in order to acquire new record. If value is 0 it means no records by min period will be saved.

Minimum value	Maximum value	Default value	Goes with (depends on) parameters	Value type
0	2592000	300	Min Distance (ID=10251) Min Angle (ID=10252) Min Speed (ID=10253) Min Saved Records (ID=10254) Send Period (ID=10255)	Uint32

9.6.6.2 Min Distance (ID=10251)

This parameter indicates distance in meters in order to acquire new record. Record is stored when the distance between previous records is greater than parameter's value. If value is 0 it means no records by min distance will be saved.

Minimum value	Maximum value	Default value	Goes with (depends on) parameters	Value type
0	65535	100	Min Period (ID=10250) Min Angle (ID=10252) Min Speed (ID=10253) Min Saved Records (ID=10254) Send Period (ID=10255)	Uint16

9.6.6.3 Min Angle (ID=10252)

This parameter indicates angle in degrees in order to acquire new record. If angle difference between last recorded coordinate and current position is greater than defined value, new record is stored. This parameter is operational, when speed is higher than 10km/h. If value is 0 it means no records by min angle will be saved.

Minimum value	Maximum value	Default value	Goes with (depends on) parameters	Value type
0	180	10	Min Period (ID=10250) Min Distance (ID=10251) Min Speed (ID=10253) Min Saved Records (ID=10254) Send Period (ID=10255)	Uint8

9.6.6.4 Min Speed (ID=10253)

This parameter indicates speed difference in order to acquire new record. If speed difference between last recorded coordinate and current position is greater than defined value, new record is stored. If value is 0 it means no records by min speed delta will be saved.

Minimum value	Maximum value	Default value	Goes with (depends on) parameters	Value type
0	255	10	Min Period (ID=10250) Min Distance (ID=10251) Min Angle (ID=10252) Min Saved Records (ID=10254) Send Period (ID=10255)	Uint8

9.6.6.5 Min Saved Records (ID=10254)

This parameter defines minimum number of records in one data packet that can be sent to server. It has higher priority than Data Send Period (ID=10105).

Minimum value	Maximum value	Default value	Goes with (depends on) parameters	Value type
1	255	1	Min Period (ID=10250) Min Distance (ID=10251) Min Angle (ID=10252) Min Speed (ID=10253) Send Period (ID=10255)	Uint8

9.6.6.6 Send Period (ID=10255)

This parameter indicates frequency (time interval in seconds) of sending data to server.

Minimum value	Maximum value	Default value	Goes with (depends on) parameters	Value type
0	2592000	120	Min Period (ID=10250) Min Distance (ID=10251) Min Angle (ID=10252) Min Speed (ID=10253) Min Saved Records (ID=10254)	Uint32

9.7 Features Parameters

9.7.1 Green driving parameters

9.7.1.1 Green driving priority (ID=11000)

Defines priority of green driving scenario: 0 – disabled, 1 – low, 2 – high, 3 – panic.

Minimum value	Maximum value	Default value	Goes with (depends on) parameters	Value type
0	3	0	Max Acceleration Force (ID=11004) Max Braking Force (ID=11005) Max Cornering (ID=11006) Green/Eco driving (ID=11007) Green driving digital output control settings (ID=11003) Green driving Digital output on duration (ID=11001) Green driving Digital output off duration (ID=11002) Green driving Send SMS to (ID=7034) Green driving SMS text (ID=8034)	Uint8

9.7.1.2 Max Acceleration Force (ID=11004)

It is max allowed acceleration force which can be reached while accelerating without triggering harsh acceleration event (m/s^2).

Minimum value	Maximum value	Default value	Goes with (depends on) parameters	Value type
0.5	10	2.2	Green driving priority (ID=11000) Max Braking Force (ID=11005) Max Cornering (ID=11006) Green/Eco driving (ID=11007) Green driving digital output control settings (ID=11003) Green driving Digital output on duration (ID=11001) Green driving Digital output off duration (ID=11002) Green driving Send SMS to (ID=7034) Green driving SMS text (ID=8034)	float

9.7.1.3 Max Braking Force (ID=11005)

It is max allowed braking force which can be reached while braking without triggering harsh braking event (m/s^2).

Minimum value	Maximum value	Default value	Goes with (depends on) parameters	Value type
0.5	10	2.5	Green driving priority (ID=11000) Max Acceleration Force	float

			(ID=11004) Max Cornering (ID=11006) Green/Eco driving (ID=11007) Green driving digital output control settings (ID=11003) Green driving Digital output on duration (ID=11001) Green driving Digital output off duration (ID=11002) Green driving Send SMS to (ID=7034) Green driving SMS text (ID=8034)	

9.7.1.4 Max Cornering (ID=11006)

It is max allowed cornering angle which can be reached while cornering without triggering harsh cornering event (m/s^2).

Minimum value	Maximum value	Default value	Goes with (depends on) parameters	Value type
0.5	10	2.1	Green driving priority (ID=11000) Max Acceleration Force (ID=11004) Max Braking Force (ID=11005) Green/Eco driving (ID=11007) Green driving digital output control settings (ID=11003) Green driving Digital output on duration (ID=11001) Green driving Digital output off duration (ID=11002) Green driving Send SMS to (ID=7034) Green driving SMS text (ID=8034)	float

9.7.1.5 Green/Eco driving (ID=11007)

Choose between Eco driving(accelerometer) and Green driving(gps). 0 – GPS, 1 – Accelerometer

Minimum value	Maximum value	Default value	Goes with (depends on) parameters	Value type
0	1	0	Green driving priority (ID=11000) Max Acceleration Force (ID=11004) Max Braking Force (ID=11005) Max Cornering (ID=11006) Green driving digital output	Uint8

			control settings (ID=11003) Green driving Digital output on duration (ID=11001) Green driving Digital output off duration (ID=11002) Green driving Send SMS to (ID=7034) Green driving SMS text (ID=8034)	

9.7.1.6 Green driving digital output control settings (ID=11003)

Enables DOUT1 (1), enables DOUT2 (2) or disables (0) Green driving output control.

Minimum value	Maximum value	Default value	Goes with (depends on) parameters	Value type
0	2	0	Green driving priority (ID=11000) Max Acceleration Force (ID=11004) Max Braking Force (ID=11005) Max Cornering (ID=11006) Green/Eco driving (ID=11007) Green driving Digital output on duration (ID=11001) Green driving Digital output off duration (ID=11002) Green driving Send SMS to (ID=7034) Green driving SMS text (ID=8034)	Uint8

9.7.1.7 Green driving Digital output on duration (ID=11001)

Output ON duration in milliseconds

Minimum value	Maximum value	Default value	Goes with (depends on) parameters	Value type
100	5000	200	Green driving priority (ID=11000) Max Acceleration Force (ID=11004) Max Braking Force (ID=11005) Max Cornering (ID=11006) Green/Eco driving (ID=11007) Green driving digital output control settings (ID=11003) Green driving Digital output off duration (ID=11002) Green driving Send SMS to	Uint32

			(ID=7034) Green driving SMS text (ID=8034)	

9.7.1.8 Green driving Digital output off duration (ID=11002)

Output OFF duration in in milliseconds

Minimum value	Maximum value	Default value	Goes with (depends on) parameters	Value type
0	5000	200	Green driving priority (ID=11000) Max Acceleration Force (ID=11004) Max Braking Force (ID=11005) Max Cornering (ID=11006) Green/Eco driving (ID=11007) Green driving digital output control settings (ID=11003) Green driving Digital output on duration (ID=11001) Green driving Send SMS to (ID=7034) Green driving SMS text (ID=8034)	Uint32

9.7.1.9 Green driving Send SMS to (ID=7034)

Enable/disable sms event sending. 0 – Disable, 1-10 – sms will be sent to configured GSM number.

Minimum value	Maximum value	Default value	Goes with (depends on) parameters	Value type
0	10	0	Green driving priority (ID=11000) Max Acceleration Force (ID=11004) Max Braking Force (ID=11005) Max Cornering (ID=11006) Green/Eco driving (ID=11007) Green driving digital output control settings (ID=11003) Green driving Digital output on duration (ID=11001) Green driving Digital output off duration (ID=11002) Green driving SMS text (ID=8034) GSM Predefined Numbers (ID=6000-6009)	Uint8

9.7.1.10 Green driving SMS text (ID=8034)

Configure green driving sms event text here.

Minimum value	Maximum value	Default value	Goes with (depends on) parameters	Value type
0	160 char	Green Driving	Green driving priority (ID=11000) Max Acceleration Force (ID=11004) Max Braking Force (ID=11005) Max Cornering (ID=11006) Green/Eco driving (ID=11007) Green driving digital output control settings (ID=11003) Green driving Digital output on duration (ID=11001) Green driving Digital output off duration (ID=11002) Green driving Send SMS to (ID=7034)	S8[160]

9.7.2 Overspeeding scenario parameters

9.7.2.1 Overspeeding priority (ID=11100)

Defines priority of overspeeding scenario: 0 – disabled, 1 – low, 2 – high, 3 – panic.

Minimum value	Maximum value	Default value	Goes with (depends on) parameters	Value type
0	3	0	Max allowed Speed (ID=11104) Overspeeding output control (ID=11103) Overspeeding Digital output on duration (ID=11101) Overspeeding Digital output off duration (ID=11102) Over Speeding Send SMS To (ID=7032) Over Speeding SMS Text (ID=8032)	Uint8

9.7.2.2 Max allowed Speed (ID=11104)

It is max allowed speed which can be reached. If this value exceeded Over speeding event will occur.

Minimum value	Maximum value	Default value	Goes with (depends on) parameters	Value type
0	260	90	Overspeeding priority (ID=11100) Overspeeding output control (ID=11103) Overspeeding Digital output on	Uint16

			duration (ID=11101) Overspeeding Digital output off duration (ID=11102) Over Speeding Send SMS To (ID=7032) Over Speeding SMS Text (ID=8032)	

9.7.2.3 Overspeeding output control (ID=11103)

Enables DOUT1 (1), enables DOUT2 (2) or disables (0) overspeeding output control.

Minimum value	Maximum value	Default value	Goes with (depends on) parameters	Value type
0	2	0	Overspeeding priority (ID=11100) Max allowed Speed (ID=11104) Overspeeding Digital output on duration (ID=11101) Overspeeding Digital output off duration (ID=11102) Over Speeding Send SMS To (ID=7032) Over Speeding SMS Text (ID=8032)	Uint8

9.7.2.4 Overspeeding Digital output on duration (ID=11101)

Output ON duration in milliseconds

Minimum value	Maximum value	Default value	Goes with (depends on) parameters	Value type
100	5000	200	Overspeeding priority (ID=11100) Max allowed Speed (ID=11104) Overspeeding output control (ID=11103) Overspeeding Digital output off duration (ID=11102) Over Speeding Send SMS To (ID=7032) Over Speeding SMS Text (ID=8032)	Int32

9.7.2.5 Overspeeding Digital output off duration (ID=11102)

Output OFF duration in milliseconds

Minimum value	Maximum value	Default value	Goes with (depends on) parameters	Value type
0	5000	200	Overspeeding priority (ID=11100) Max allowed Speed (ID=11104)	Int32

			Overspeeding output control (ID=11103) Overspeeding Digital output on duration (ID=11101) Over Speeding Send SMS To (ID=7032) Over Speeding SMS Text (ID=8032)	

9.7.2.6 Overspeeding Send SMS To (ID=7032)

Enable/disable sms event sending. 0 – Disable, 1-10 – sms will be sent to configured GSM number.

Minimum value	Maximum value	Default value	Goes with (depends on) parameters	Value type
0	10	0	Overspeeding priority (ID=11100) Max allowed Speed (ID=11104) Overspeeding output control (ID=11103) Overspeeding Digital output on duration (ID=11101) Overspeeding Digital output off duration (ID=11102) Over Speeding SMS Text (ID=8032) GSM Predefined Numbers (ID=6000-6009)	UInt8

9.7.2.7 Overspeeding SMS Text (ID=8032)

Configure over speeding sms event text here.

Minimum value	Maximum value	Default value	Goes with (depends on) parameters	Value type
0	160 char	Overspeeding	Overspeeding priority (ID=11100) Max allowed Speed (ID=11104) Overspeeding output control (ID=11103) Overspeeding Digital output on duration (ID=11101) Overspeeding Digital output off duration (ID=11102) Over Speeding Send SMS To (ID=7032)	S8[160]

9.7.3 Jamming scenario parameters

9.7.3.1 Jamming priority (ID=11300)

Scenario settings: 0 – Disable, 1 – Low, 2 – High, 3 – Panic

Minimum value	Maximum value	Default value	Goes with (depends on) parameters	Value type
0	3	0	Jamming Eventual records (ID=11303) Jamming Output Control (ID=11304) Time Until Jamming Event Detection(ID=11305) Jamming DOUT on duration [ms] (ID=11301) Jamming DOUT off duration [ms] (ID=11302)	Uint8

9.7.3.2 Jamming Eventual records (ID=11303)

Disables or enables eventual records. 0 – Disable, 1 – Enable

Minimum value	Maximum value	Default value	Goes with (depends on) parameters	Value type
0	1	1	Jamming priority (ID=11300) Jamming Output Control (ID=11304) Time Until Jamming Event Detection(ID=11305) Jamming DOUT on duration [ms] (ID=11301) Jamming DOUT off duration [ms] (ID=11302)	Uint8

9.7.3.3 Jamming Output Control (ID=11304)

Enables DOUT1 (1), enables DOUT2 (2) or disables (0) Jamming output control.

Minimum value	Maximum value	Default value	Goes with (depends on) parameters	Value type
0	2	0	Jamming priority (ID=11300) Jamming Eventual records (ID=11303) Time Until Jamming Event Detection(ID=11305) Jamming DOUT on duration [ms] (ID=11301) Jamming DOUT off duration [ms] (ID=11302)	Uint8

9.7.3.4 Time Until Jamming Event Detection(ID=11305)

After Jamming trigger count TMO (in seconds), control OUTPUT and generate event after this timeout. If Jamming End trigger is detected during counting no event will be generated and output will not be controlled.

Minimum value	Maximum value	Default value	Goes with (depends on) parameters	Value type
0	65535	60	Jamming priority (ID=11300) Jamming Eventual records (ID=11303) Jamming Output Control (ID=11304) Jamming DOUT on duration [ms] (ID=11301) Jamming DOUT off duration [ms] (ID=11302)	Uint16

9.7.3.5 Jamming DOUT on duration [ms] (ID=11301)

Sets time period, that Dout will be on.

Minimum value	Maximum value	Default value	Goes with (depends on) parameters	Value type
100	5000	200	Jamming priority (ID=11300) Jamming Eventual records (ID=11303) Jamming Output Control (ID=11304) Time Until Jamming Event Detection(ID=11305) Jamming DOUT off duration [ms] (ID=11302)	Int32

9.7.3.6 Jamming DOUT off duration [ms] (ID=11302)

Sets time period, that Dout will be off.

Minimum value	Maximum value	Default value	Goes with (depends on) parameters	Value type
0	5000	200	Jamming priority (ID=11300) Jamming Eventual records (ID=11303) Jamming Output Control (ID=11304) Time Until Jamming Event Detection(ID=11305) Jamming DOUT on duration [ms] (ID=11301)	Int32

9.7.4 Immobilizer scenario parameters

9.7.4.1 Scenario settings (ID=11700)

Scenario settings: 0 – Disable, 1 – Low Priority, 2 – High Priority, 3 – Panic Priority.

Minimum value	Maximum value	Default value	Goes with (depends on) parameters	Value type
0	3	0	Eventual records (ID=11701) Output control (ID=11702) iButton list check (ID=11703) Send SMS to (ID=7140) SMS text (ID=8140)	Uint8

9.7.4.2 Eventual records (ID=11701)

Disables or enables eventual records. 0 – Disable, 1 – Enable

Minimum value	Maximum value	Default value	Goes with (depends on) parameters	Value type
0	1	1	Scenario settings (ID=11700) Output control (ID=11702) iButton list check (ID=11703) Send SMS to (ID=7140) SMS text (ID=8140)	Uint8

9.7.4.3 Output control (ID=11702)

Defines rather immobilizer will control digital output or not. 0 – Disable, 1 – Enable (DOUT1), 2 – Enable (DOUT2).

Minimum value	Maximum value	Default value	Goes with (depends on) parameters	Value type
0	2	0	Scenario settings (ID=11700) Eventual records (ID=11701) iButton list check (ID=11703) Send SMS to (ID=7140) SMS text (ID=8140)	Uint8

9.7.4.4 iButton list check (ID=11703)

iButton list check – option to select if it is necessary to check configured iButton list (1 – Authorized Driving behavior) or not (0 – Immobilizer behavior).

Minimum value	Maximum value	Default value	Goes with (depends on) parameters	Value type
0	1	0	Scenario settings (ID=11700) Eventual records (ID=11701) Output control (ID=11702) Send SMS to (ID=7140) SMS text (ID=8140) iButton List (ID=30000 – 30500)	Uint8

9.7.4.5 Send SMS to (ID=7140)

Enable/disable sms event sending. 0 – Disable, 1-10 – sms will be sent to configured GSM number.

Minimum value	Maximum value	Default value	Goes with (depends on) parameters	Value type
0	10	0	Scenario settings (ID=11700) Eventual records (ID=11701)	Uint8

			Output control (ID=11702) iButton list check (ID=11703) SMS text (ID=8140)	

9.7.4.6 SMS text (ID=8140)

Configure Immobilizer sms event text here.

Minimum value	Maximum value	Default value	Goes with (depends on) parameters	Value type
0	160	Immobilizer	Scenario settings (ID=11700) Eventual records (ID=11701) Output control (ID=11702) iButton list check (ID=11703) Send SMS to (ID=7140)	String

9.7.5 Trip scenario parameters

9.7.5.1 Trip priority (ID=11800)

Defines priority of trip scenario:

0 – disabled, 1 – low, 2 – high, 3 – panic

Minimum value	Maximum value	Default value	Goes with (depends on) parameters	Value type
0	3	0	Eventually Records (ID=11801) Trip mode (ID=11802) Start Speed (ID=11803) Ignition Off Timeout (ID=11804) Eco Score allowed events (ID=700) Trip Send SMS To (ID=7031) Trip SMS Text (ID=8031) Odometer distance calculation source (ID=11806)	Uint8

9.7.5.2 Eventually Records (ID=11801)

Disables or enables eventual records. 0 – Disable, 1 – Enable.

Minimum value	Maximum value	Default value	Goes with (depends on) parameters	Value type
0	1	0	Trip priority (ID=11800) Trip mode (ID=11802) Start Speed (ID=11803) Ignition Off Timeout (ID=11804) Eco Score allowed events (ID=700) Trip Send SMS To (ID=7031) Trip SMS Text (ID=8031) Odometer distance calculation source (ID=11806)	Uint8

9.7.5.3 Trip mode (ID=11802)

For this feature I/O ODOMETER must be enabled. If I/O ODOMETER is enabled, and mode is set to Continuous (value 0), TRIP distance is going to be counted till the end of trip, if between records mode is set, ODOMETER will count distance only between two records.

Minimum value	Maximum value	Default value	Goes with (depends on) parameters	Value type
0	1	0	Trip priority (ID=11800) Eventually Records (ID=11801) Start Speed (ID=11803) Ignition Off Timeout (ID=11804) Eco Score allowed events (ID=700) Trip Send SMS To (ID=7031) Trip SMS Text (ID=8031) Odometer distance calculation source (ID=11806)	Uint8

9.7.5.4 Start Speed (ID=11803)

This parameter represents speed (km/h), which is detected as minimum speed to indicate TRIP START and generate event.

Minimum value	Maximum value	Default value	Goes with (depends on) parameters	Value type
0	255	5	Trip priority (ID=11800) Eventually Records (ID=11801) Trip mode (ID=11802) Ignition Off Timeout (ID=11804) Eco Score allowed events (ID=700) Trip Send SMS To (ID=7031) Trip SMS Text (ID=8031) Odometer distance calculation source (ID=11806)	Uint8

9.7.5.5 Ignition Off Timeout (ID=11804)

This parameter represents timeout to wait if ignition (ignition source) is off in order to detect TRIP STOP and generate event.

Minimum value	Maximum value	Default value	Goes with (depends on) parameters	Value type
0	65535	60	Trip priority (ID=11800) Eventually Records (ID=11801) Trip mode (ID=11802) Start Speed (ID=11803) Eco Score allowed events (ID=700) Trip Send SMS To (ID=7031) Trip SMS Text (ID=8031) Odometer distance calculation	Uint16

			source (ID=11806)	

9.7.5.6 Eco Score allowed events (ID=700)

How much Eco score events are allowed to generate in 100 km trip distance, that ECO score result would be excellent (10).

Minimum value	Maximum value	Default value	Goes with (depends on) parameters	Value type
0	65535	10	Trip priority (ID=11800) Eventually Records (ID=11801) Trip mode (ID=11802) Start Speed (ID=11803) Ignition Off Timeout (ID=11804) Trip Send SMS To (ID=7031) Trip SMS Text (ID=8031) Odometer distance calculation source (ID=11806)	Uint16

9.7.5.7 Trip Send SMS To (ID=7031)

Enable/disable sms event sending. 0 – Disable, 1-10 – sms will be sent to configured GSM number.

Minimum value	Maximum value	Default value	Goes with (depends on) parameters	Value type
0	10	0	Trip priority (ID=11800) Eventually Records (ID=11801) Trip mode (ID=11802) Start Speed (ID=11803) Ignition Off Timeout (ID=11804) Eco Score allowed events (ID=700) Trip SMS Text (ID=8031) Odometer distance calculation source (ID=11806) GSM Predefined Numbers (ID=6000-6009)	UInt8

9.7.5.8 Trip SMS Text (ID=8031)

Configure trip sms event text here.

Minimum value	Maximum value	Default value	Goes with (depends on) parameters	Value type
0	160	Trip	Trip priority (ID=11800) Eventually Records (ID=11801) Trip mode (ID=11802) Start Speed (ID=11803) Ignition Off Timeout (ID=11804) Eco Score allowed events (ID=700)	S8[160]

			Trip Send SMS To (ID=7031) Odometer distance calculation source (ID=11806)	

9.7.5.9 Odometer distance calculation source (ID=11806)

Sets odometer distance calculation source: 0 – GNSS, 1 – OBD (blue-tooth dongle), 2 – LVCAN

Minimum value	Maximum value	Default value	Goes with (depends on) parameters	Value type
0	2	0	Trip priority (ID=11800) Eventually Records (ID=11801) Trip mode (ID=11802) Start Speed (ID=11803) Ignition Off Timeout (ID=11804) Eco Score allowed events (ID=700) Trip Send SMS To (ID=7031) Trip SMS Text (ID=8031)	Uint8

9.7.5.10 Total Odometer value (ID=11807)

Sets total odometer value (km).

Minimum value	Maximum value	Default value	Goes with (depends on) parameters	Value type
0	9999999	0	I/O Total Odometer (ID=50160-50164)	Uint32

9.7.5.11 Remember iButton ID (ID=11805)

This parameter enables/disables Remember iButton ID functionality. 0 – disable, 1 – enable.

Minimum value	Maximum value	Default value	Goes with (depends on) parameters	Value type
0	1	0	Trip priority (ID=11800) Eventually Records (ID=11801) Trip mode (ID=11802) Start Speed (ID=11803) Ignition Off Timeout (ID=11804) Eco Score allowed events (ID=700) Trip Send SMS To (ID=7031) Trip SMS Text (ID=8031) iButton List (ID=30000 – 30500)	Uint8

9.7.6 DOUT control via call scenario parameters

9.7.6.1 Digital Output control (ID=12000)

Disable or enable scenario. If enabled DOUT1 (1) or DOUT2 (2) will be controlled via authorized numbers calls.

Minimum value	Maximum value	Default value	Goes with (depends on) parameters	Value type
0	2	0	DOUT deactivation (ID=12001) Duration timeout (ID=12002)	Uint8

			Authorized phone numbers (ID=4000-4199)	

9.7.6.2 DOUT deactivation (ID=12001)

Disable or enable DOUT deactivation by Digital Input. If enabled Digital input will deactivate Digital ooutput. 0 – disabled, 1 – DIN1, 2 – DIN2, 3 – DIN3.

Minimum value	Maximum value	Default value	Goes with (depends on) parameters	Value type
0	3	0	Digital Output control (ID=12000) Duration timeout (ID=12002)	Uint8

9.7.6.3 Duration timeout (ID=12002)

DOUT on duration timeout.

Minimum value	Maximum value	Default value	Goes with (depends on) parameters	Value type
0	2147483647	5	Digital Output control (ID=12000) DOUT deactivation (ID=12001)	Int32

9.7.7 iButton read notification

9.7.7.1 Digital Output control (ID=11704)

Disable or enable scenario. If enabled DOUT1 (1) or DOUT2 (2) will be turned on when iButton are attached.

Minimum value	Maximum value	Default value	Goes with (depends on) parameters	Value type
0	2	0	Duration timeout [ms] (ID=11705)	Uint8

9.7.7.2 Duration timeout [ms] (ID=11705)

DOUT on duration timeout.

Minimum value	Maximum value	Default value	Goes with (depends on) parameters	Value type
100	5000	200	Digital Output control (ID=11704)	Uint8

9.8 AutoGeofencing scenario parameters

9.8.1 AutoGeofencing priority (ID=20000)

Defines priority of autogeofencing scenario:

0 – disabled, 1 – low, 2 – high, 3 – panic

Minimum value	Maximum value	Default value	Goes with (depends on) parameters	Value type
0	3	0	Eventual Records (ID=20002) Activation Timeout (ID=20003) Deactivate by (ID=20005) AutoGeofence event generating (ID=20001) Radius (ID=20004)	Uint8

			Send sms to (ID=7030) SMS Text (ID=8030)	

9.8.2 Eventual Records (ID=20002)

0 – disable, include parameter to all records, 1 – enable, include parameter to record only if event was generated.

Minimum value	Maximum value	Default value	Goes with (depends on) parameters	Value type
0	1	1	AutoGeofencing priority (ID=20000) Activation Timeout (ID=20003) Deactivate by (ID=20005) AutoGeofence event generating (ID=20001) Radius (ID=20004) Send sms to (ID=7030) SMS Text (ID=8030)	Uint8

9.8.3 Activation Timeout (ID=20003)

Parameter represents AutoGeofencing activation timeout in seconds.

Minimum value	Maximum value	Default value	Goes with (depends on) parameters	Value type
0	65535	60	AutoGeofencing priority (ID=20000) Eventual Records (ID=20002) Deactivate by (ID=20005) AutoGeofence event generating (ID=20001) Radius (ID=20004) Send sms to (ID=7030) SMS Text (ID=8030)	Uint16

9.8.4 Deactivate by (ID=20005)

Parameter defines Autogeofence deactivation source. Value 0 - Power Voltage, 1 - Digital Input 1, 2 – Engine RPM, 3 – Digital Input 2, 4 – Digital input 3, 5 – iButton.

Minimum value	Maximum value	Default value	Goes with (depends on) parameters	Value type
0	5	0	AutoGeofencing priority (ID=20000) Eventual Records (ID=20002) Activation Timeout (ID=20003) AutoGeofence event generating (ID=20001) Radius (ID=20004) Send sms to (ID=7030) SMS Text (ID=8030) iButton List (ID=30000 – 30500)	Uint8

9.8.5 AutoGeofence event generating (ID=20001)

Generate event: 0 – on exiting zone , 1 – on entering zone; 2 – on both;

Minimum value	Maximum value	Default value	Goes with (depends on) parameters	Value type
0	2	0	AutoGeofencing priority (ID=20000) Eventual Records (ID=20002) Activation Timeout (ID=20003) Deactivate by (ID=20005) Radius (ID=20004) Send sms to (ID=7030) SMS Text (ID=8030)	Uint8

9.8.6 Radius (ID=20004)

Parameter represents radius of circle with center device coordinates after activating AutoGeofence feature.

Minimum value	Maximum value	Default value	Goes with (depends on) parameters	Value type
0	1000000	100	AutoGeofencing priority (ID=20000) Eventual Records (ID=20002) Activation Timeout (ID=20003) Deactivate by (ID=20005) AutoGeofence event generating (ID=20001) Send sms to (ID=7030) SMS Text (ID=8030)	Uint32

9.8.7 AutoGeofence Send SMS to (ID=7030)

Enable/disable sms event sending. 0 – Disable, 1-10 – sms will be sent to configured GSM number.

Minimum value	Maximum value	Default value	Goes with (depends on) parameters	Value type
0	10	0	AutoGeofencing priority (ID=20000) Eventual Records (ID=20002) Activation Timeout (ID=20003) Deactivate by (ID=20005) AutoGeofence event generating (ID=20001) Radius (ID=20004) SMS Text (ID=8030) GSM Predefined Numbers (ID=6000-6009)	U64

9.8.8 SMS Text (ID=8030)

Configure AutoGeofence sms event text here.

Minimum value	Maximum value	Default value	Goes with (depends on) parameters	Value type
0	160	AutoGeofence	AutoGeofencing priority (ID=20000) Eventual Records (ID=20002) Activation Timeout (ID=20003) Deactivate by (ID=20005) AutoGeofence event generating (ID=20001) Radius (ID=20004) Send sms to (ID=7030)	S8[180]

9.9 Manual Geofence

9.9.1 First Geozone parameters

First Geozone parameters configuration. All 50 geozones are configured with the same logic.

9.9.1.1 #1 Geozone Manual Geofencing priority (ID=20100)

0 – disabled, 1 – low, 2 – high, 3 – panic

Minimum value	Maximum value	Default value	Goes with (depends on) parameters	Value type
0	3	0	#1 Geozone Manual Geofence event generating (ID=20101) #1 Geozone Eventual Records (ID=20102) #1 Geozone Frame border (ID=20103) #1 Geozone Shape type (ID=20104) #1 Geozone Radius (ID=20105) #1 Geozone X1 (ID=20106) #1 Geozone Y1 (ID=20107) #1 Geozone X2 (ID=20108) #1 Geozone X1 (ID=20109) #1 Geozone OverSpeeding (ID=20110) #1 Geozone Max allowed speed (ID=20111)	Uint8

9.9.1.2 #1 Geozone Manual Geofence event generating (ID=20101)

Generate event: 0 – No event, 1 - on exiting zone, 2 – on entering zone; 3 – on both;

Minimum value	Maximum value	Default value	Goes with (depends on) parameters	Value type
0	3	0	#1 Geozone Manual Geofencing priority (ID=20100)	Uint8

			#1 Geozone Eventual Records (ID=20102) #1 Geozone Frame border (ID=20103) #1 Geozone Shape type (ID=20104) #1 Geozone Radius (ID=20105) #1 Geozone X1 (ID=20106) #1 Geozone Y1 (ID=20107) #1 Geozone X2 (ID=20108) #1 Geozone X1 (ID=20109) #1 Geozone OverSpeeding (ID=20110) #1 Geozone Max allowed speed (ID=20111)	

9.9.1.3 #1 Geozone Eventual Records (ID=20102)

0 – disable, include parameter to all records, 1 – enable, include parameter to record only if event was generated.

Minimum value	Maximum value	Default value	Goes with (depends on) parameters	Value type
0	1	1	#1 Geozone Manual Geofencing priority (ID=20100) #1 Geozone Manual Geofence event generating (ID=20101) #1 Geozone Frame border (ID=20103) #1 Geozone Shape type (ID=20104) #1 Geozone Radius (ID=20105) #1 Geozone X1 (ID=20106) #1 Geozone Y1 (ID=20107) #1 Geozone X2 (ID=20108) #1 Geozone X1 (ID=20109) #1 Geozone OverSpeeding (ID=20110) #1 Geozone Max allowed speed (ID=20111)	Uint8

9.9.1.4 #1 Geozone Frame border (ID=20103)

Frame border is an additional border around Geofence zone.

Minimum value	Maximum value	Default value	Goes with (depends on) parameters	Value type
0	1000000	1	#1 Geozone Manual Geofencing priority (ID=20100) #1 Geozone Manual Geofence event generating (ID=20101) #1 Geozone Eventual Records	Uint32

			(ID=20102) #1 Geozone Shape type (ID=20104) #1 Geozone Radius (ID=20105) #1 Geozone X1 (ID=20106) #1 Geozone Y1 (ID=20107) #1 Geozone X2 (ID=20108) #1 Geozone X1 (ID=20109) #1 Geozone OverSpeeding (ID=20110) #1 Geozone Max allowed speed (ID=20111)	

9.9.1.5 #1 Geozone Shape type (ID=20104)

Shape type: 0 – Circle, 1 - Rectangle.

Minimum value	Maximum value	Default value	Goes with (depends on) parameters	Value type
0	1	0	#1 Geozone Manual Geofencing priority (ID=20100) #1 Geozone Manual Geofence event generating (ID=20101) #1 Geozone Eventual Records (ID=20102) #1 Geozone Frame border (ID=20103) #1 Geozone Radius (ID=20105) #1 Geozone X1 (ID=20106) #1 Geozone Y1 (ID=20107) #1 Geozone X2 (ID=20108) #1 Geozone X1 (ID=20109) #1 Geozone OverSpeeding (ID=20110) #1 Geozone Max allowed speed (ID=20111)	Uint8

9.9.1.6 #1 Geozone Radius (ID=20105)

Radius of circle when circular zone is used (radius in meters).

Minimum value	Maximum value	Default value	Goes with (depends on) parameters	Value type
5	1000000	5	#1 Geozone Manual Geofencing priority (ID=20100) #1 Geozone Manual Geofence event generating (ID=20101) #1 Geozone Eventual Records (ID=20102) #1 Geozone Frame border (ID=20103)	Uint32

			#1 Geozone Shape type (ID=20104) #1 Geozone X1 (ID=20106) #1 Geozone Y1 (ID=20107) #1 Geozone X2 (ID=20108) #1 Geozone X1 (ID=20109) #1 Geozone OverSpeeding (ID=20110) #1 Geozone Max allowed speed (ID=20111)	

9.9.1.7 #1 Geozone X1 (ID=20106)

Geofence zone left bottom corner X coordinate (longitude).

Minimum value	Maximum value	Default value	Goes with (depends on) parameters	Value type
-180	180	0	#1 Geozone Manual Geofencing priority (ID=20100) #1 Geozone Manual Geofence event generating (ID=20101) #1 Geozone Eventual Records (ID=20102) #1 Geozone Frame border (ID=20103) #1 Geozone Shape type (ID=20104) #1 Geozone Radius (ID=20105) #1 Geozone Y1 (ID=20107) #1 Geozone X2 (ID=20108) #1 Geozone X1 (ID=20109) #1 Geozone OverSpeeding (ID=20110) #1 Geozone Max allowed speed (ID=20111)	Double

9.9.1.8 #1 Geozone Y1 (ID=20107)

Geofence zone left bottom corner Y coordinate (latitude).

Minimum value	Maximum value	Default value	Goes with (depends on) parameters	Value type
-90	90	0	#1 Geozone Manual Geofencing priority (ID=20100) #1 Geozone Manual Geofence event generating (ID=20101) #1 Geozone Eventual Records (ID=20102) #1 Geozone Frame border (ID=20103) #1 Geozone Shape type (ID=20104)	Double

			#1 Geozone Radius (ID=20105) #1 Geozone X1 (ID=20106) #1 Geozone X2 (ID=20108) #1 Geozone X1 (ID=20109) #1 Geozone OverSpeeding (ID=20110) #1 Geozone Max allowed speed (ID=20111)	

9.9.1.9 #1 Geozone X2 (ID=20108)

Geofence zone upper right corner X coordinate (longitude).

Minimum value	Maximum value	Default value	Goes with (depends on) parameters	Value type
-180	180	0	#1 Geozone Manual Geofencing priority (ID=20100) #1 Geozone Manual Geofence event generating (ID=20101) #1 Geozone Eventual Records (ID=20102) #1 Geozone Frame border (ID=20103) #1 Geozone Shape type (ID=20104) #1 Geozone Radius (ID=20105) #1 Geozone X1 (ID=20106) #1 Geozone Y1 (ID=20107) #1 Geozone X1 (ID=20109) #1 Geozone OverSpeeding (ID=20110) #1 Geozone Max allowed speed (ID=20111)	Double

9.9.1.10 #1 Geozone X1 (ID=20109)

Geofence zone upper right corner Y coordinate (latitude).

Minimum value	Maximum value	Default value	Goes with (depends on) parameters	Value type
-90	90	0	#1 Geozone Manual Geofencing priority (ID=20100) #1 Geozone Manual Geofence event generating (ID=20101) #1 Geozone Eventual Records (ID=20102) #1 Geozone Frame border (ID=20103) #1 Geozone Shape type (ID=20104) #1 Geozone Radius (ID=20105) #1 Geozone X1 (ID=20106)	Double

			#1 Geozone Y1 (ID=20107) #1 Geozone X2 (ID=20108) #1 Geozone OverSpeeding (ID=20110) #1 Geozone Max allowed speed (ID=20111)	

9.9.1.11 #1 Geozone OverSpeeding (ID=20110)

Enable/disable overspeeding event in geozone.

Minimum value	Maximum value	Default value	Goes with (depends on) parameters	Value type
0	1	0	#1 Geozone Manual Geofencing priority (ID=20100) #1 Geozone Manual Geofence event generating (ID=20101) #1 Geozone Eventual Records (ID=20102) #1 Geozone Frame border (ID=20103) #1 Geozone Shape type (ID=20104) #1 Geozone Radius (ID=20105) #1 Geozone X1 (ID=20106) #1 Geozone Y1 (ID=20107) #1 Geozone X2 (ID=20108) #1 Geozone X1 (ID=20109) #1 Geozone Max allowed speed (ID=20111)	Uint8

9.9.1.12 #1 Geozone Max allowed speed (ID=20111)

It is max allowed speed which can be reached in geozone (km/h).

Minimum value	Maximum value	Default value	Goes with (depends on) parameters	Value type
0	1000	90	#1 Geozone Manual Geofencing priority (ID=20100) #1 Geozone Manual Geofence event generating (ID=20101) #1 Geozone Eventual Records (ID=20102) #1 Geozone Frame border (ID=20103) #1 Geozone Shape type (ID=20104) #1 Geozone Radius (ID=20105) #1 Geozone X1 (ID=20106) #1 Geozone Y1 (ID=20107) #1 Geozone X2 (ID=20108) #1 Geozone X1 (ID=20109)	Uint16

			#1 Geozone OverSpeeding (ID=20110)	

9.9.2 Other Geozones

Other Geozone's parameters have the same logic as shown in Geozone #1.

GeoFence Zone Number	Geofence Zone's parameters
1	20100-20111
2	20120-20131
3	20140-20151
…	…
49	21060-21071
50	21080-21091

9.9.2.1 Send sms to #1-5 Geozone (ID=7025-7029), #6-50 Geozone (ID=7071-7115)

Enable/disable sms event sending. 0 – Disable, 1-10 – sms will be sent to configured GSM number.

Minimum value	Maximum value	Default value	Goes with (depends on) parameters	Value type
0	10	0	GSM Predefined Numbers (ID=6000-6009) SMS Text #1-5 Geozone (ID=8025-8029), #6-50 Geozone (ID=8071-8115)	Uint8

9.9.2.2 SMS Text #1-5 Geozone (ID=8025-8029), #6-50 Geozone (ID=8071-8115)

Configure geozone # sms event text here.

Minimum value	Maximum value	Default value	Goes with (depends on) parameters	Value type
0	160	Geozone Zone #	Send sms to #1-5 Geozone (ID=7025-7029), #6-50 Geozone (ID=7071-7115)	S8[160]

9.10 GPS Fuel counter

This functionality is meant to calculate fuel consumption based on set consumption values in different situations.

9.10.1 City Consumption L/100km (ID=11900)

Consumption in the city

Minimum value	Maximum value	Default value	Goes with (depends on) parameters	Value type
0	50	0	Highway Consumption L/100km	Double

			(ID=11901) Average Consumption L/100km (ID=11902) City Speed [km/h] (ID=11903) Highway Speed [km/h] (ID=11904) Average Speed [km/h] (ID=11905) Correction coefficient (ID=11906) Fuel Consumption on Idling [L/h] (ID=11907) Higher Speeds Add [%] (ID=11908) Highway Consumption every km/h (ID=11909)	

9.10.2 Highway Consumption L/100km (ID=11901)

Consumption on highway

Minimum value	Maximum value	Default value	Goes with (depends on) parameters	Value type
0	50	0	City Consumption L/100km (ID=11900) Average Consumption L/100km (ID=11902) City Speed [km/h] (ID=11903) Highway Speed [km/h] (ID=11904) Average Speed [km/h] (ID=11905) Correction coefficient (ID=11906) Fuel Consumption on Idling [L/h] (ID=11907) Higher Speeds Add [%] (ID=11908) Highway Consumption every km/h (ID=11909)	Double

9.10.3 Average Consumption L/100km (ID=11902)

Average fuel consumption of the vehicle

Minimum value	Maximum value	Default value	Goes with (depends on) parameters	Value type
0	50	0	City Consumption L/100km (ID=11900) Highway Consumption L/100km (ID=11901) City Speed [km/h] (ID=11903) Highway Speed [km/h]	Double

			(ID=11904) Average Speed [km/h] (ID=11905) Correction coefficient (ID=11906) Fuel Consumption on Idling [L/h] (ID=11907) Higher Speeds Add [%] (ID=11908) Highway Consumption every km/h (ID=11909)	

9.10.4 City Speed [km/h] (ID=11903)

Speed in the city

Minimum value	Maximum value	Default value	Goes with (depends on) parameters	Value type
0	250	30	City Consumption L/100km (ID=11900) Highway Consumption L/100km (ID=11901) Average Consumption L/100km (ID=11902) Highway Speed [km/h] (ID=11904) Average Speed [km/h] (ID=11905) Correction coefficient (ID=11906) Fuel Consumption on Idling [L/h] (ID=11907) Higher Speeds Add [%] (ID=11908) Highway Consumption every km/h (ID=11909)	Unit64

9.10.5 Highway Speed [km/h] (ID=11904)

Speed on highway

Minimum value	Maximum value	Default value	Goes with (depends on) parameters	Value type
0	250	90	City Consumption L/100km (ID=11900) Highway Consumption L/100km (ID=11901) Average Consumption L/100km (ID=11902) City Speed [km/h] (ID=11903) Average Speed [km/h] (ID=11905) Correction coefficient	Unit64

			(ID=11906) Fuel Consumption on Idling [L/h] (ID=11907) Higher Speeds Add [%] (ID=11908) Highway Consumption every km/h (ID=11909)	

9.10.6 Average Speed [km/h] (ID=11905)

Average speed of the vehicle

Minimum value	Maximum value	Default value	Goes with (depends on) parameters	Value type
0	250	60	City Consumption L/100km (ID=11900) Highway Consumption L/100km (ID=11901) Average Consumption L/100km (ID=11902) City Speed [km/h] (ID=11903) Highway Speed [km/h] (ID=11904) Correction coefficient (ID=11906) Fuel Consumption on Idling [L/h] (ID=11907) Higher Speeds Add [%] (ID=11908) Highway Consumption every km/h (ID=11909)	Unit64

9.10.7 Correction coefficient (ID=11906)

Correction coefficient is use for correction every value of fuel consumption which is send to server (Used Fuel * Correction coefficient).

Minimum value	Maximum value	Default value	Goes with (depends on) parameters	Value type
0.01	2	1	City Consumption L/100km (ID=11900) Highway Consumption L/100km (ID=11901) Average Consumption L/100km (ID=11902) City Speed [km/h] (ID=11903) Highway Speed [km/h] (ID=11904) Average Speed [km/h] (ID=11905) Fuel Consumption on Idling [L/h] (ID=11907) Higher Speeds Add [%]	Double

			(ID=11908) Highway Consumption every km/h (ID=11909)	

9.10.8 Fuel Consumption on Idling [L/h] (ID=11907)

Sets fuel consumption while vehicle is idling

Minimum value	Maximum value	Default value	Goes with (depends on) parameters	Value type
0	5	1	City Consumption L/100km (ID=11900) Highway Consumption L/100km (ID=11901) Average Consumption L/100km (ID=11902) City Speed [km/h] (ID=11903) Highway Speed [km/h] (ID=11904) Average Speed [km/h] (ID=11905) Correction coefficient (ID=11906) Higher Speeds Add [%] (ID=11908) Highway Consumption every km/h (ID=11909)	Double

9.10.9 Higher Speeds Add [%] (ID=11908)

Minimum value	Maximum value	Default value	Goes with (depends on) parameters	Value type
0	250	20	City Consumption L/100km (ID=11900) Highway Consumption L/100km (ID=11901) Average Consumption L/100km (ID=11902) City Speed [km/h] (ID=11903) Highway Speed [km/h] (ID=11904) Average Speed [km/h] (ID=11905) Correction coefficient (ID=11906) Fuel Consumption on Idling [L/h] (ID=11907) Highway Consumption every km/h (ID=11909)	Uint64

9.10.10 Highway Consumption every km/h (ID=11909)

Minimum value	Maximum value	Default value	Goes with (depends on) parameters	Value type
0	100	50	City Consumption L/100km (ID=11900) Highway Consumption L/100km (ID=11901) Average Consumption L/100km (ID=11902) City Speed [km/h] (ID=11903) Highway Speed [km/h] (ID=11904) Average Speed [km/h] (ID=11905) Correction coefficient (ID=11906) Fuel Consumption on Idling [L/h] (ID=11907) Higher Speeds Add [%] (ID=11908)	Uint64

9.11 Accelerometer Features

9.11.1 Unplug Detection

9.11.1.1 Scenario settings (ID=11500)

Sets priority of the scenario: 0 – Disable, 1 – Low Priority, 2 – High Priority, 3 – Panic Priority

Minimum value	Maximum value	Default value	Goes with (depends on) parameters	Value type
0	3	0	Eventual records (ID=11501) Unplug detection mode (ID=11502) Send sms to (ID=7067) SMS Text (ID=8067)	Uint8

9.11.1.2 Eventual records (ID=11501)

If enabled, only eventual records of unplug detection will be sent. 0 – Disable, 1 – Enable

Minimum value	Maximum value	Default value	Goes with (depends on) parameters	Value type
0	1	1	Scenario settings (ID=11500) Unplug detection mode (ID=11502) Send sms to (ID=7067) SMS Text (ID=8067)	Uint8

9.11.1.3 Unplug detection mode (ID=11502)

Sets Unplug detection mode. 0 – simple, 1 – advanced.

Simple – unplug detection according to external voltage only

Advanced – unplug detection according to: external voltage and accelerometer

Minimum value	Maximum value	Default value	Goes with (depends on) parameters	Value type
0	1	0	Scenario settings (ID=11500) Eventual records (ID=11501) Send sms to (ID=7067) SMS Text (ID=8067)	Uint8

9.11.1.4 Unplug send sms to (ID=7067)

Enable/disable sms event sending. 0 – Disable, 1-10 – sms will be sent to configured GSM number.

Minimum value	Maximum value	Default value	Goes with (depends on) parameters	Value type
0	10	0	Scenario settings (ID=11500) Eventual records (ID=11501) Unplug detection mode (ID=11502) SMS Text (ID=8067) GSM Predefined Numbers (ID=6000-6009)	Uint8

9.11.1.5 SMS Text (ID=8067)

Configure unplug detection sms event text here.

Minimum value	Maximum value	Default value	Goes with (depends on) parameters	Value type
0	160	Unplug	Scenario settings (ID=11500) Eventual records (ID=11501) Unplug detection mode (ID=11502) Unplug send sms to (ID=7067)	S8[160]

9.11.2 Towing Detection

9.11.2.1Scenario setting (ID=11600)

0 – disabled, 1 – low, 2 – high, 3 – panic

Minimum value	Maximum value	Default value	Goes with (depends on) parameters	Value type
0	3	0	Eventual Records (ID=11601) Activation Timeout (min) (ID=11602) Event Timeout (s) (ID=11603) Make Call(Sms Event Number ID) (ID=11604) Treshold (mg) (ID=11605) Angle (deg) (ID=11606) Duration (msec) (ID=11607) Towing Send SMS (ID=7066) SMS Text (ID=8066)	Uint8

9.11.2.2Eventual Records (ID=11601)

Generate event: 0 – disable; 1 – enable.

Minimum value	Maximum value	Default value	Goes with (depends on) parameters	Value type
0	1	1	Scenario setting (ID=11600) Activation Timeout (min) (ID=11602) Event Timeout (s) (ID=11603) Make Call(Sms Event Number ID) (ID=11604) Treshold (mg) (ID=11605) Angle (deg) (ID=11606) Duration (msec) (ID=11607) Towing Send SMS (ID=7066) SMS Text (ID=8066)	Uint8

9.11.2.3 Activation Timeout (min) (ID=11602)

Activation timeout is time after which FMB2YX turns ON Towing detection function if other requirement is met (Ignition OFF state detected).

Minimum value	Maximum value	Default value	Goes with (depends on) parameters	Value type
0	65535	5	Scenario setting (ID=11600) Eventual Records (ID=11601) Event Timeout (s) (ID=11603) Make Call(Sms Event Number ID) (ID=11604) Treshold (mg) (ID=11605) Angle (deg) (ID=11606) Duration (msec) (ID=11607) Towing Send SMS (ID=7066) SMS Text (ID=8066)	Uint16

9.11.2.4 Event Timeout (s) (ID=11603)

Defines time period (in second) to check ignition state when Acceleration or Angle value reach. If towing event is generated during this time period, it is skipped. It allows to filter out redundant towing event while entering car.

Minimum value	Maximum value	Default value	Goes with (depends on) parameters	Value type
0	60	0	Scenario setting (ID=11600) Eventual Records (ID=11601) Activation Timeout (min) (ID=11602) Make Call(Sms Event Number ID) (ID=11604) Treshold (mg) (ID=11605) Angle (deg) (ID=11606) Duration (msec) (ID=11607) Towing Send SMS (ID=7066) SMS Text (ID=8066)	Uint8

9.11.2.5Towing Make Call(Sms Event Number ID) (ID=11604)

If function enabled makes call to specified phone number (configured in pre defined numbers).

Minimum value	Maximum value	Default value	Goes with (depends on) parameters	Value type
0	10	0	GSM Predefined Numbers (ID=6000-6009) Scenario setting (ID=11600) Eventual Records (ID=11601) Activation Timeout (min) (ID=11602) Event Timeout (s) (ID=11603) Treshold (mg) (ID=11605) Angle (deg) (ID=11606) Duration (msec) (ID=11607) Towing Send SMS (ID=7066) SMS Text (ID=8066)	Uint8

9.11.2.6 Threshold (mg) (ID=11605)

Value used to detect towing when ignition is OFF.

Minimum value	Maximum value	Default value	Goes with (depends on) parameters	Value type
0.1	5	0.22	Scenario setting (ID=11600) Eventual Records (ID=11601) Activation Timeout (min) (ID=11602) Event Timeout (s) (ID=11603) Make Call(Sms Event Number ID) (ID=11604) Angle (deg) (ID=11606) Duration (msec) (ID=11607) Towing Send SMS (ID=7066) SMS Text (ID=8066)	Double

9.11.2.7Angle (deg) (ID=11606)

Value used to detect towing when ignition is OFF.

Minimum value	Maximum value	Default value	Goes with (depends on) parameters	Value type
0.1	5	1	Scenario setting (ID=11600) Eventual Records (ID=11601) Activation Timeout (min) (ID=11602) Event Timeout (s) (ID=11603) Make Call(Sms Event Number ID) (ID=11604) Treshold (mg) (ID=11605) Duration (msec) (ID=11607) Towing Send SMS (ID=7066) SMS Text (ID=8066)	Double

9.11.2.8 Duration (msec) (ID=11607)

Defines time period to check Acceleration, angle values.

Minimum value	Maximum value	Default value	Goes with (depends on) parameters	Value type
1	5000	1000	Scenario setting (ID=11600) Eventual Records (ID=11601) Activation Timeout (min) (ID=11602) Event Timeout (s) (ID=11603) Make Call(Sms Event Number ID) (ID=11604) Treshold (mg) (ID=11605) Angle (deg) (ID=11606) Towing Send SMS (ID=7066) SMS Text (ID=8066)	Uint16

9.11.2.9 Towing Send SMS (ID=7066)

Enable/disable sms event sending. 0 – Disable, 1-10 – sms will be sent to configured GSM number.

Minimum value	Maximum value	Default value	Goes with (depends on) parameters	Value type
0	10	0	GSM Predefined Numbers (ID=6000-6009) Scenario setting (ID=11600) Eventual Records (ID=11601) Activation Timeout (min) (ID=11602) Event Timeout (s) (ID=11603) Make Call(Sms Event Number ID) (ID=11604) Treshold (mg) (ID=11605) Angle (deg) (ID=11606) Duration (msec) (ID=11607) SMS Text (ID=8066)	Uint8

9.11.2.10 SMS Text (ID=8066)

Configure Towing detection sms event text here.

Minimum value	Maximum value	Default value	Goes with (depends on) parameters	Value type
0	160	Towing	Scenario setting (ID=11600) Eventual Records (ID=11601) Activation Timeout (min) (ID=11602) Event Timeout (s) (ID=11603) Make Call(Sms Event Number ID) (ID=11604) Treshold (mg) (ID=11605) Angle (deg) (ID=11606) Duration (msec) (ID=11607)	S8[180]

			Towing Send SMS (ID=7066)	

9.11.3 Crash Detection

9.11.3.1 Scenario settings (ID=11400)

Sets priority of the scenario: 0 – Disable, 1 – Low Priority, 2 – High Priority, 3 – Panic Priority

Minimum value	Maximum value	Default value	Goes with (depends on) parameters	Value type
0	3	0	Duration [ms] (ID=11401) Treshold [mG] (ID=11402) Crash trace (ID=11406) Crash sms send to (ID=7068) SMS Text (ID=8068)	Uint8

9.11.3.2 Duration [ms] (ID=11401)

Minimum value	Maximum value	Default value	Goes with (depends on) parameters	Value type
0	1000	5	Scenario settings (ID=11400) Treshold [mG] (ID=11402) Crash trace (ID=11406) Crash sms send to (ID=7068) SMS Text (ID=8068)	Uint8

9.11.3.3 Threshold [mG] (ID=11402)

Minimum value	Maximum value	Default value	Goes with (depends on) parameters	Value type
0	7900	1500	Scenario settings (ID=11400) Duration [ms] (ID=11401) Crash trace (ID=11406) Crash sms send to (ID=7068) SMS Text (ID=8068)	Uint16

9.11.3.4 Crash trace (ID=11406)

Minimum value	Maximum value	Default value	Goes with (depends on) parameters	Value type
0	1	0	Scenario settings (ID=11400) Duration [ms] (ID=11401) Treshold [mG] (ID=11402) Crash sms send to (ID=7068) SMS Text (ID=8068)	Uint8

9.11.3.5 Crash sms send to (ID=7068)

Enable/disable sms event sending. 0 – Disable, 1-10 – sms will be sent to configured GSM number.

Minimum value	Maximum value	Default value	Goes with (depends on) parameters	Value type
0	10	0	GSM Predefined Numbers (ID=6000-6009) Scenario settings (ID=11400) Duration [ms] (ID=11401) Treshold [mG] (ID=11402) Crash trace (ID=11406) SMS Text (ID=8068)	Uint8

9.11.3.6 SMS Text (ID=8068)

Configure Crash sms event text here.

Minimum value	Maximum value	Default value	Goes with (depends on) parameters	Value type
0	160	Crash	Scenario settings (ID=11400) Duration [ms] (ID=11401) Treshold [mG] (ID=11402) Crash trace (ID=11406) Crash sms send to (ID=7068)	S8[160]

9.11.4 Excessive idling

9.11.4.1 Excessive idling priority (ID=11200)

Defines priority of Excessive idling scenario:

0 – disabled, 1 – low, 2 – high, 3 – panic

Minimum value	Maximum value	Default value	Goes with (depends on) parameters	Value type
0	3	0	Eventual records (ID=11203) Excessive idling minimum stop duration (ID=11205) Excessive idling minimum move duration (ID=11206) Excessive idling output control (ID=11204) Excessive idling output on duration (ID=11201) Excessive idling output off duration (ID=11202) Excessive idling Send SMS To (ID=7033) Excessive idling SMS Text (ID=8033)	Uint8

9.11.4.2 Eventual records (ID=11203)

Disables (0) or enables (1) eventual records with idling value.

Minimum value	Maximum value	Default value	Goes with (depends on) parameters	Value type
0	1	1	Excessive idling priority	UInt8

			(ID=11200) Excessive idling minimum stop duration (ID=11205) Excessive idling minimum move duration (ID=11206) Excessive idling output control (ID=11204) Excessive idling output on duration (ID=11201) Excessive idling output off duration (ID=11202) Excessive idling Send SMS To (ID=7033) Excessive idling SMS Text (ID=8033)	

9.11.4.3 Excessive idling time to stopped (ID=11205)

Defines minimum time in seconds of vehicle idling before scenario enables.

Minimum value	Maximum value	Default value	Goes with (depends on) parameters	Value type
0	3600	300	Excessive idling priority (ID=11200) Eventual records (ID=11203) Excessive idling minimum move duration (ID=11206) Excessive idling output control (ID=11204) Excessive idling output on duration (ID=11201) Excessive idling output off duration (ID=11202) Excessive idling Send SMS To (ID=7033) Excessive idling SMS Text (ID=8033)	UInt8

9.11.4.4 Excessive idling time to moving (ID=11206)

Defines minimum time in seconds of vehicle idling before scenario disables.

Minimum value	Maximum value	Default value	Goes with (depends on) parameters	Value type
0	3600	5	Excessive idling priority (ID=11200) Eventual records (ID=11203) Excessive idling minimum stop duration (ID=11205) Excessive idling output control (ID=11204) Excessive idling output on	UInt8

			duration (ID=11201) Excessive idling output off duration (ID=11202) Excessive idling Send SMS To (ID=7033) Excessive idling SMS Text (ID=8033)	

9.11.4.5 Excessive idling output control (ID=11204)

Enables DOUT1 (1), enables DOUT2 (2) or disables (0) Excessive idling output control.

Minimum value	Maximum value	Default value	Goes with (depends on) parameters	Value type
0	2	0	Excessive idling priority (ID=11200) Eventual records (ID=11203) Excessive idling minimum stop duration (ID=11205) Excessive idling minimum move duration (ID=11206) Excessive idling output on duration (ID=11201) Excessive idling output off duration (ID=11202) Excessive idling Send SMS To (ID=7033) Excessive idling SMS Text (ID=8033)	UInt8

9.11.4.6 Excessive idling output on duration (ID=11201)

Output ON duration in seconds

Minimum value	Maximum value	Default value	Goes with (depends on) parameters	Value type
100	5000	200	Excessive idling priority (ID=11200) Eventual records (ID=11203) Excessive idling minimum stop duration (ID=11205) Excessive idling minimum move duration (ID=11206) Excessive idling output control (ID=11204) Excessive idling output off duration (ID=11202) Excessive idling Send SMS To (ID=7033) Excessive idling SMS Text (ID=8033)	Int32

9.11.4.7 Excessive idling output off duration (ID=11202)

Output OFF duration in seconds

Minimum value	Maximum value	Default value	Goes with (depends on) parameters	Value type
0	5000	200	Excessive idling priority (ID=11200) Eventual records (ID=11203) Excessive idling minimum stop duration (ID=11205) Excessive idling minimum move duration (ID=11206) Excessive idling output control (ID=11204) Excessive idling output on duration (ID=11201) Excessive idling Send SMS To (ID=7033) Excessive idling SMS Text (ID=8033)	Int32

9.11.4.8 Excessive idling Send SMS To (ID=7033)

Enable/disable sms event sending. 0 – Disable, 1-10 – sms will be sent to configured GSM number.

Minimum value	Maximum value	Default value	Goes with (depends on) parameters	Value type
0	10	0	GSM Predefined Numbers (ID=6000-6009) Excessive idling priority (ID=11200) Eventual records (ID=11203) Excessive idling minimum stop duration (ID=11205) Excessive idling minimum move duration (ID=11206) Excessive idling output control (ID=11204) Excessive idling output on duration (ID=11201) Excessive idling output off duration (ID=11202) Excessive idling SMS Text (ID=8033)	UInt8

9.11.4.9 Excessive idling SMS Text (ID=8033)

Configure excessive idling sms event text here.

Minimum value	Maximum value	Default value	Goes with (depends on) parameters	Value type
0	160	Idling Event	Excessive idling priority (ID=11200) Eventual records (ID=11203) Excessive idling minimum stop duration (ID=11205) Excessive idling minimum move duration (ID=11206) Excessive idling output control (ID=11204) Excessive idling output on duration (ID=11201) Excessive idling output off duration (ID=11202) Excessive idling Send SMS To (ID=7033)	S8[160]

9.12 blue-tooth

9.12.1.1 BT Radio (ID=800)

Enables or disable blue-tooth feature. 0 – Disabled, 1 – Enable hidden, 2 – Enable visible

Minimum value	Maximum value	Default value	Goes with (depends on) parameters	Value type
0	2	0	Local name (ID 801) Local PIN (ID=802) Security mode (ID=803) External MAC (ID=804) External name (ID=805) External PIN (ID=806) Connection mode (ID=807) Authorized devices MAC list (ID=830 - 834)	Uint8

9.12.1.2 Local name (ID 801)

Parameter defines a visible name of FMB2YX device.

Minimum value	Maximum value	Default value	Goes with (depends on) parameters	Value type
0 Symbols	30 Symbols	FMB2YX_(last 7 IMEI numbers)	BT Radio (ID=800) Local PIN (ID=802) Security mode (ID=803) External MAC (ID=804) External name (ID=805) External PIN (ID=806) Connection mode (ID=807) Authorized devices MAC list (ID=830 - 834)	S8[30]

9.12.1.3 Local PIN (ID=802)

Parameter Lets to configure blue-tooth PIN.

Minimum value	Maximum value	Default value	Goes with (depends on) parameters	Value type
0 Symbols	4 Symbols	5555	BT Radio (ID=800) Local name (ID 801) Security mode (ID=803) External MAC (ID=804) External name (ID=805) External PIN (ID=806) Connection mode (ID=807) Authorized devices MAC list (ID=830 - 834)	String

9.12.1.4 Security mode (ID=803)

Parameter defines a security mode of FMBX device. 0 – PIN only, 1 – PIN and MAC, 2 – MAC only, 3 – None.

Minimum value	Maximum value	Default value	Goes with (depends on) parameters	Value type
0	3	0	BT Radio (ID=800) Local name (ID 801) Local PIN (ID=802) External MAC (ID=804) External name (ID=805) External PIN (ID=806) Connection mode (ID=807) Authorized devices MAC list (ID=830 - 834)	Uint8

9.12.1.5 External MAC (ID=804)

Defines external device's MAC, for FMB2YX to auto connect to.

Minimum value	Maximum value	Default value	Goes with (depends on) parameters	Value type
0 symbols	12 symbols	0	BT Radio (ID=800) Local name (ID 801) Local PIN (ID=802) Security mode (ID=803) External name (ID=805) External PIN (ID=806) Connection mode (ID=807) Authorized devices MAC list (ID=830 - 834)	string

9.12.1.6 External name (ID=805)

Defines external device's name, for FMB2YX to auto connect to.

Minimum value	Maximum value	Default value	Goes with (depends on) parameters	Value type
0 symbols	30	0	BT Radio (ID=800)	string

	symbols		Local name (ID 801) Local PIN (ID=802) Security mode (ID=803) External MAC (ID=804) External PIN (ID=806) Connection mode (ID=807) Authorized devices MAC list (ID=830 - 834)	

9.12.1.7 External PIN (ID=806)

Defines external device's PIN, for FMB2YX to auto connect to.

Minimum value	Maximum value	Default value	Goes with (depends on) parameters	Value type
0 symbols	8 symbols	0	BT Radio (ID=800) Local name (ID 801) Local PIN (ID=802) Security mode (ID=803) External MAC (ID=804) External name (ID=805) Connection mode (ID=807) Authorized devices MAC list (ID=830 - 834)	string

9.12.1.8 Connection mode (ID=807)

Defines a mode in which FMB2YX will connect to external devices. 0 – None,

1 – FMB2YX will connect to Hands Free Headset, 2 – FMB2YX will connect to OBDII blue-tooth dongle, 3 – Data Link.

Minimum value	Maximum value	Default value	Goes with (depends on) parameters	Value type
0	3	0	BT Radio (ID=800) Local name (ID 801) Local PIN (ID=802) Security mode (ID=803) External MAC (ID=804) External name (ID=805) External PIN (ID=806) Authorized devices MAC list (ID=830 - 834)	Uint8

9.12.1.9 Authorized devices MAC list (ID=830 - 834)

Parameter allows to add an authorized devices MAC for connection to FMB2YX

Minimum value	Maximum value	Default value	Goes with (depends on) parameters	Value type
0 symbols	12 symbols	-	BT Radio (ID=800) Local name (ID 801) Local PIN (ID=802) Security mode (ID=803) External MAC (ID=804)	String

			External name (ID=805) External PIN (ID=806) Connection mode (ID=807)	

9.13 iButton List (ID=30000 – 30500)

List of 500 authorized iButtons' IDs.

Minimum value	Maximum value	Default value	Goes with (depends on) parameters	Value type
0	FFFFFFFF FFFFFFFF	0	Deactivate by (ID=20005) iButton list check (ID=11703) Remember iButton ID (ID=11805)	Uint64

9.14 I/O parameters

I/O properties are additional data sources which are recorded along with usual GPS data.

9.14.1 I/O#1 property parameter priority Ignition (ID=50000)

Parameter defines I/O property type of priority: 0 is disabled, 1 – low, 2 – high, 3 - panic.

Minimum value	Maximum value	Default value	Goes with (depends on) parameters	Value type
0	3	1	I/O#1 operand (ID=50001) I/O#1 High level (ID=50002) I/O#1 Low level (ID=50003) I/O#1 Event only (ID=50004) I/O#1 averaging length (ID=50005) I/O#1 send SMS (ID=7000) I/O#1 SMS text (ID=8000)	Uint8

9.14.2 I/O#1 operand (ID=50001)

Parameter defines when event is sent: 0 – on range exit, 1 – on range entrance, 2 – both, 3 – monitoring, 4 – hysteresis, 5 – on changes, 6 – on delta change.

Minimum value	Maximum value	Default value	Goes with (depends on) parameters	Value type
0	6	0	I/O#1 property parameter priority Ignition (ID=50000) I/O#1 High level (ID=50002) I/O#1 Low level (ID=50003) I/O#1 Event only (ID=50004) I/O#1 averaging length (ID=50005) I/O#1 send SMS (ID=7000) I/O#1 SMS text (ID=8000)	Uint8

9.14.3 I/O#1 High level (ID=50002)

Parameter defines high value of triggered I/O property. This parameter is used to set thresholds for I/O properties to generate events.

Minimum value	Maximum value	Default value	Goes with (depends on) parameters	Value type
0	1	0	I/O#1 property parameter priority	Uint8

			Ignition (ID=50000) I/O#1 operand (ID=50001) I/O#1 Low level (ID=50003) I/O#1 Event only (ID=50004) I/O#1 averaging length (ID=50005) I/O#1 send SMS (ID=7000) I/O#1 SMS text (ID=8000)	

9.14.4 I/O#1 Low level (ID=50003)

Parameter defines low value of triggered I/O property. This parameter is used to set thresholds for I/O properties to generate events.

Minimum value	Maximum value	Default value	Goes with (depends on) parameters	Value type
0	1	0	I/O#1 property parameter priority Ignition (ID=50000) I/O#1 operand (ID=50001) I/O#1 High level (ID=50002) I/O#1 Event only (ID=50004) I/O#1 averaging length (ID=50005) I/O#1 send SMS (ID=7000) I/O#1 SMS text (ID=8000)	Uint8

9.14.5 I/O#1 Event only (ID=50004)

Parameter defines when IO element value is sent: 0 – with every AVL packet, 1 – on event only. On event means that IO element value is included to AVL packet only when this particular event happens. With regular, periodic records such IO element value is not included.

Minimal value	Maximum value	Default value	Goes with (depends on) parameters	Value type
0	1	0	I/O#1 property parameter priority Ignition (ID=50000) I/O#1 operand (ID=50001) I/O#1 High level (ID=50002) I/O#1 Low level (ID=50003) I/O#1 averaging length (ID=50005) I/O#1 send SMS (ID=7000) I/O#1 SMS text (ID=8000)	Uint8

9.14.6 I/O#1 averaging length (ID=50005)

Parameter defines I/O property sample length to average.

Minimum value	Maximum value	Default value	Goes with (depends on) parameters	Value type
0	65535	10	I/O#1 property parameter priority Ignition (ID=50000) I/O#1 operand (ID=50001) I/O#1 High level (ID=50002) I/O#1 Low level (ID=50003) I/O#1 Event only (ID=50004) I/O#1 send SMS (ID=7000) I/O#1 SMS text (ID=8000)	Uint16

9.14.7 I/O#1 send SMS (ID=7000)

Enable/disable sms event sending. 0 – Disable, 1-10 – sms will be sent to configured GSM number.

Minimum value	Maximum value	Default value	Goes with (depends on) parameters	Value type
0	10	0	GSM Predefined Numbers (ID=6000-6009) I/O#1 property parameter priority Ignition (ID=50000) I/O#1 operand (ID=50001) I/O#1 High level (ID=50002) I/O#1 Low level (ID=50003) I/O#1 Event only (ID=50004) I/O#1 SMS text (ID=8000)	Uint8

9.14.8 I/O#1 SMS text (ID=8000)

Configure I/O#1 sms event text here.

Minimum value	Maximum value	Default value	Goes with (depends on) parameters	Value type
0	160	Ignition	I/O#1 property parameter priority Ignition (ID=50000) I/O#1 operand (ID=50001) I/O#1 High level (ID=50002) I/O#1 Low level (ID=50003) I/O#1 Event only (ID=50004) I/O#1 send SMS (ID=7000)	S8[160]

9.14.9 I\O elements parameters and types.

Priority: 0 – disabled, 1 – low, 2 – high, 3 – panic.

Operand: 0 – On Exit, 1 – On Entrance, 2 – On Both, 3 – Monitoring, 4 – On Hysteresis, 5 – On Change, 6 – On Delta Change.

Event only: 0 – No, 1 – Yes.

Table 16. Parameters for FMB2YX devices

Parameter ID	Parameter Type	Default value	Value range		Parameter name
			Min	Max	
50000	Uint8	1	0	3	Ignition Priority
50001	Uint8	5	0	6	Ignition Operand
50002	Uint8	0	0	1	Ignition High level
50003	Uint8	0	0	1	Ignition Low level
50004	Uint8	0	0	1	Ignition Event only
50005	Uint16	10	0	65535	Ignition Average
7000	Uint8	0	0	10	Send SMS
8000	String	0	0	160	SMS Text
50010	Uint8	1	0	3	Movement Priority
50011	Uint8	5	0	6	Movement Operand
50012	Uint8	0	0	1	Movement High level
50013	Uint8	0	0	1	Movement Low level
50014	Uint8	0	0	1	Movement Event only
50015	Uint16	1	0	65535	Movement Average
7001	Uint8	0	0	10	Send SMS

Parameter ID	Parameter Type	Default value	Value range		Parameter name
			Min	Max	
8001	String	0	0	160	SMS Text
50020	Uint8	1	0	3	Data Mode Priority
50021	Uint8	3	0	6	Data Mode Operand
50022	Uint8	0	0	5	Data Mode High level
50023	Uint8	0	0	5	Data Mode Low level
50024	Uint8	0	0	1	Data Mode Event only
7002	Uint8	0	0	10	Send SMS
8002	String	0	0	160	SMS Text
50030	Uint8	1	0	3	GSM Signal Priority
50031	Uint8	3	0	6	GSM Signal Operand
50032	Uint8	0	0	5	GSM Signal High level
50033	Uint8	0	0	5	GSM Signal Low level
50034	Uint8	0	0	1	GSM Signal Event only
50035	Uint16	1	0	65535	GSM Signal Average
7003	Uint8	0	0	10	Send SMS
8003	String	0	0	160	SMS Text
50040	Uint8	1	0	3	Deep Sleep Priority
50041	Uint8	3	0	6	Deep Sleep Operand
50042	Uint8	0	0	2	Deep Sleep High level
50043	Uint8	0	0	2	Deep Sleep Low level
50044	Uint8	0	0	1	Deep Sleep Event only
7004	Uint8	0	0	10	Send SMS
8004	String	0	0	160	SMS Text
50050	Uint8	1	0	3	GNSS Status Priority
50051	Uint8	3	0	6	GNSS Status Operand
50052	Uint8	0	0	5	GNSS Status High level
50053	Uint8	0	0	5	GNSS Status Low level
50053	Uint8	0	0	1	GNSS Status Event only
7005	Uint8	0	0	10	Send SMS
8005	String	0	0	160	SMS Text
50060	Uint8	0	0	3	GNSS PDOP Priority
5061	Uint8	3	0	6	GNSS PDOP Operand
5062	Uint16	0	0	1000	GNSS PDOP High level
5063	Uint16	0	0	1000	GNSS PDOP Low level
5064	Uint8	0	0	1	GNSS PDOP Event only
5065	Uint16	10	0	65535	GNSS PDOP Average
7006	Uint8	0	0	10	Send SMS
8006	String	0	0	160	SMS Text
50070	Uint8	1	0	3	GNSS HDOP Priority
50071	Uint8	3	0	6	GNSS HDOP Operand
50072	Uint16	0	0	1000	GNSS HDOP High level
50073	Uint16	0	0	1000	GNSS HDOP Low level
50074	Uint8	0	0	1	GNSS HDOP Event only
50075	Uint16	10	0	65535	GNSS HDOP Average
7007	Uint8	0	0	10	Send SMS
8007	String	0	0	160	SMS Text
50080	Uint8	1	0	3	External Voltage Priority
50081	Uint8	6	0	6	External Voltage Operand
50082	Uint16	1000	0	60000	External Voltage High level

Parameter ID	Parameter Type	Default value	Value range		Parameter name
			Min	Max	
50083	Uint16	0	0	60000	External Voltage Low level
50084	Uint8	0	0	1	External Voltage Event only
50085	Uint16	10	0	65535	External Voltage Average
7008	Uint8	0	0	10	Send SMS
8008	String	0	0	160	SMS Text
50090	Uint8	1	0	3	Speed Priority
50091	Uint8	3	0	6	Speed Operand
50092	Uint16	0	0	300	Speed High level
50093	Uint16	0	0	300	Speed Low level
50094	Uint8	0	0	1	Speed Event only
50095	Uint16	1	0	65535	Speed Average
7009	Uint8	0	0	10	Send SMS
8009	String	0	0	160	SMS Text
50100	Uint8	0	0	3	GSM Cell ID Priority
50101	Uint8	3	0	6	GSM Cell ID Operand
50102	Uint32	0	0	999999	GSM Cell ID High level
50103	Uint32	0	0	999999	GSM Cell ID Low level
50104	Uint8	0	0	1	GSM Cell ID Event only
7010	Uint8	0	0	10	Send SMS
8010	String	0	0	160	SMS Text
50110	Uint8	0	0	3	GSM Area Code Priority
50111	Uint8	3	0	6	GSM Area Code Operand
50112	Uint32	0	0	999999	GSM Area Code High level
50113	Uint32	0	0	999999	GSM Area Code Low level
50114	Uint8	0	0	1	GSM Area Code Event only
7011	Uint8	0	0	10	Send SMS
8011	String	0	0	160	SMS Text
50120	Uint8	1	0	3	Battery Voltage Priority
50121	Uint8	3	0	6	Battery Voltage Operand
50122	Uint16	0	0	5000	Battery Voltage High level
50123	Uint16	0	0	5000	Battery Voltage Low level
50124	Uint8	0	0	1	Battery Voltage Event only
50125	Uint8	0	0	10	Battery Voltage Average
7012	Uint8	0	0	10	Send SMS
8012	String	0	0	160	SMS Text
50130	Uint8	1	0	3	Battery Current Priority
50131	Uint8	3	0	6	Battery Current Operand
50132	Uint16	0	0	5000	Battery Current High level
50133	Uint16	0	0	5000	Battery Current Low level
50134	Uint8	0	0	1	Battery Current Event only
50135	Uint8	0	0	10	Battery Current Average
7013	Uint8	0	0	10	Send SMS
8013	String	0	0	160	SMS Text
50140	Uint8	0	0	3	Active GSM Operator Priority
50141	Uint8	3	0	6	Active GSM Operator Operand
50142	Uint32	0	0	999999	Active GSM Operator High level
50143	Uint32	0	0	999999	Active GSM Operator Low level
50144	Uint8	0	0	1	Active GSM Operator Event only
7014	Uint8	0	0	10	Send SMS

Parameter ID	Parameter Type	Default value	Value range		Parameter name
			Min	Max	
8014	String	0	0	160	SMS Text
50150	Uint8	0	0	3	Trip Odometer Priority
50151	Uint8	3	0	6	Trip Odometer Operand
50152	Uint32	0	0	1000000	Trip Odometer High level
50153	Uint32	0	0	1000000	Trip Odometer Low level
50154	Uint8	0	0	1	Trip Odometer Event only
7015	Uint8	0	0	10	Send SMS
8015	String	0	0	160	SMS Text
50160	Uint8	0	0	3	Total Odometer Priority
50161	Uint8	3	0	6	Total Odometer Operand
50162	Uint32	0	0	10000000	Total Odometer High level
50163	Uint32	0	0	10000000	Total Odometer Low level
50164	Uint8	0	0	1	Total Odometer Event only
7016	Uint8	0	0	10	Send SMS
8016	String	0	0	160	SMS Text
50170	Uint8	0	0	3	Digital Input 1 Priority
50171	Uint8	3	0	6	Digital Input 1 Operand
50172	Uint8	0	0	1	Digital Input 1 High level
50173	Uint8	0	0	1	Digital Input 1 Low level
50174	Uint8	0	0	1	Digital Input 1 Event only
50175	Uint16	1	0	65535	Digital Input 1 Average
7017	Uint8	0	0	10	Send SMS
8017	String	0	0	160	SMS Text
50180	Uint8	0	0	3	Analog Input 1 Priority
50181	Uint8	3	0	6	Analog Input 1 Operand
50182	Uint16	0	0	30000	Analog Input 1 High level
50183	Uint16	0	0	30000	Analog Input 1 Low level
50184	Uint8	0	0	1	Analog Input 1 Event only
50185	Uint16	10	0	65535	Analog Input 1 Average
7018	Uint8	0	0	10	Send SMS
8018	String	0	0	160	SMS Text
50190	Uint8	0	0	3	Digital Output 1 Priority
50191	Uint8	0	0	6	Digital Output 1 Operand
50192	Uint8	0	0	1	Digital Output 1 High level
50193	Uint8	0	0	1	Digital Output 1 Low level
50194	Uint8	0	0	1	Digital Output 1 Event only
50195	Uint16	1	0	65535	Digital Output 1 Average
7019	Uint8	0	0	10	Send SMS
8019	String	0	0	160	SMS Text
50200	Uint8	0	0	3	Fuel Used GPS Priority
50201	Uint8	3	0	6	Fuel Used GPS Operand
50202	Uint32	0	0	1000000	Fuel Used GPS High level
50203	Uint32	0	0	1000000	Fuel Used GPS Low level
50204	Uint8	0	0	1	Fuel Used GPS Event only
50205	Uint16	1	0	65535	Fuel Used GPS Average
7020	Uint8	0	0	10	Send SMS
8020	String	0	0	160	SMS Text
50210	Uint8	0	0	3	Fuel Rate GPS Priority
50211	Uint8	3	0	6	Fuel Rate GPS Operand

Parameter ID	Parameter Type	Default value	Value range		Parameter name
			Min	Max	
50212	Uint32	0	0	1000000	Fuel Rate GPS High level
50213	Uint32	0	0	1000000	Fuel Rate GPS Low level
50214	Uint8	0	0	1	Fuel Rate GPS Event only
50215	Uint16	1	0	65535	Fuel Rate GPS Average
7021	Uint8	0	0	10	Send SMS
8021	String	0	0	160	SMS Text
50220	Uint8	0	0	3	Axis X Priority
50221	Uint8	3	0	6	Axis X Operand
50222	Uint16	0	-8000	8000	Axis X High level
50223	Uint16	0	-8000	8000	Axis X Low level
50224	Uint8	0	0	1	Axis X Event only
50225	Uint16	1	0	65535	Axis X Average
7022	Uint8	0	0	10	Send SMS
8022	String	0	0	160	SMS Text
50230	Uint8	0	0	3	Axis Y Priority
50231	Uint8	3	0	6	Axis Y Operand
50232	Uint16	0	-8000	8000	Axis Y High level
50233	Uint16	0	-8000	8000	Axis Y Low level
50234	Uint8	0	0	1	Axis Y Event only
50235	Uint16	1	0	65535	Axis Y Average
7023	Uint8	0	0	10	Send SMS
8023	String	0	0	160	SMS Text
50240	Uint8	0	0	3	Axis Z Priority
50241	Uint8	3	0	6	Axis Z Operand
50242	Uint16	0	-8000	8000	Axis Z High level
50243	Uint16	0	-8000	8000	Axis Z Low level
50244	Uint8	0	0	1	Axis Z Event only
50245	Uint16	1	0	65535	Axis Z Average
7024	Uint8	0	0	10	Send SMS
8024	String	0	0	160	SMS Text
50250	Uint8	0	0	3	ICCID Priority
50251	Uint8	3	0	6	ICCID Operand
50254	Uint8	0	0	1	ICCID Event only
7069	Uint8	0	0	10	Send SMS
8069	String	0	0	160	SMS Text
50260	Uint8	0	0	3	SD Status Priority
50261	Uint8	3	0	6	SD Status Operand
50262	Uint8	0	0	1	SD Status High level
50263	Uint8	0	0	1	SD Status Low level
7070	Uint8	0	0	10	Send SMS
8070	String	0	0	160	SMS Text
50310	Uint8	0	0	3	Dallas Temperature 1 Priority
50311	Uint8	3	0	6	Dallas Temperature 1 Operand
50312	Int8	0	-55	125	Dallas Temperature 1 High level
50313	Int8	0	-55	125	Dallas Temperature 1 Low level
50314	Uint8	0	0	1	Dallas Temperature 1 Event only
50315	Uint16	0	0	65535	Dallas Temperature 1 Average
7120	Uint8	0	0	10	Send SMS
8120	String	0	0	160	SMS Text

Parameter ID	Parameter Type	Default value	Value range		Parameter name
			Min	Max	
50320	Uint8	0	0	3	Dallas Temperature 2 Priority
50321	Uint8	3	0	6	Dallas Temperature 2 Operand
50322	Int8	0	-55	125	Dallas Temperature 2 High level
50323	Int8	0	-55	125	Dallas Temperature 2 Low level
50324	Uint8	0	0	1	Dallas Temperature 2 Event only
50325	Uint16	0	0	65535	Dallas Temperature 2 Average
7121	Uint8	0	0	10	Send SMS
8121	String	0	0	160	SMS Text
50330	Uint8	0	0	3	Dallas Temperature 3 Priority
50331	Uint8	3	0	6	Dallas Temperature 3 Operand
50332	Int8	0	-55	125	Dallas Temperature 3 High level
50333	Int8	0	-55	125	Dallas Temperature 3 Low level
50334	Uint8	0	0	1	Dallas Temperature 3 Event only
50335	Uint16	0	0	65535	Dallas Temperature 3 Average
7122	Uint8	0	0	10	Send SMS
8122	String	0	0	160	SMS Text
50340	Uint8	0	0	3	Dallas Temperature 4 Priority
50341	Uint8	3	0	6	Dallas Temperature 4 Operand
50342	Int8	0	-55	125	Dallas Temperature 4 High level
50343	Int8	0	-55	125	Dallas Temperature 4 Low level
50344	Uint8	0	0	1	Dallas Temperature 4 Event only
50345	Uint16	0	0	65535	Dallas Temperature 4 Average
7123	Uint8	0	0	10	Send SMS
8123	String	0	0	160	SMS Text
50350	Uint8	0	0	3	Dallas Temperature ID 1 Priority
50351	Uint8	3	0	6	Dallas Temperature ID 1 Operand
50352	Uint32	0	0	999999999	Dallas Temperature ID 1 High level
50353	Uint32	0	0	999999999	Dallas Temperature ID 1 Low level
50354	Uint8	0	0	1	Dallas Temperature ID 1 Event only
50355	Uint16	0	0	65535	Dallas Temperature ID 1 Average
7124	Uint8	0	0	10	Send SMS
8124	String	0	0	160	SMS Text
50360	Uint8	0	0	3	Dallas Temperature ID 2 Priority
50361	Uint8	3	0	6	Dallas Temperature ID 2 Operand
50362	Uint32	0	0	999999999	Dallas Temperature ID 2 High level
50363	Uint32	0	0	999999999	Dallas Temperature ID 2 Low level
50364	Uint8	0	0	1	Dallas Temperature ID 2 Event only
50365	Uint16	0	0	65535	Dallas Temperature ID 2 Average
7125	Uint8	0	0	10	Send SMS
8125	String	0	0	160	SMS Text
50370	Uint8	0	0	3	Dallas Temperature ID 3 Priority
50371	Uint8	3	0	6	Dallas Temperature ID 3 Operand
50372	Uint32	0	0	999999999	Dallas Temperature ID 3 High level
50373	Uint32	0	0	999999999	Dallas Temperature ID 3 Low level
50374	Uint8	0	0	1	Dallas Temperature ID 3 Event only
50375	Uint16	0	0	65535	Dallas Temperature ID 3 Average
7126	Uint8	0	0	10	Send SMS
8126	String	0	0	160	SMS Text
50380	Uint8	0	0	3	Dallas Temperature ID 4 Priority

Parameter ID	Parameter Type	Default value	Value range		Parameter name
			Min	Max	
50381	Uint8	3	0	6	Dallas Temperature ID 4 Operand
50382	Uint32	0	0	999999999	Dallas Temperature ID 4 High level
50383	Uint32	0	0	999999999	Dallas Temperature ID 4 Low level
50384	Uint8	0	0	1	Dallas Temperature ID 4 Event only
50385	Uint16	0	0	65535	Dallas Temperature ID 4 Average
7127	Uint8	0	0	10	Send SMS
8127	String	0	0	160	SMS Text
50390	Uint8	0	0	3	iButton Priority
50391	Uint8	3	0	6	iButton Operand
50392	Uint32	0	0	999999999	iButton High level
50393	Uint32	0	0	999999999	iButton Low level
50394	Uint8	0	0	1	iButton Event only
50395	Uint16	0	0	65535	iButton Average
7128	Uint8	0	0	10	Send SMS
8128	String	0	0	160	SMS Text
50510	Uint8	0	0	3	Eco Score Priority
50511	Uint8	3	0	6	Eco Score Operand
50512	Uint8	0	0	1	Eco Score High level
50513	Uint8	0	0	1	Eco Score Low level
50514	Uint8	0	0	1	Eco Score Event only
7220	Uint8	0	0	10	Send SMS
8220	String	0	0	160	SMS Text
50270	Uint8	0	0	3	Digital Input 2 Priority
50271	Uint8	3	0	6	Digital Input 2 Operand
50272	Uint8	0	0	1	Digital Input 2 High level
50273	Uint8	0	0	1	Digital Input 2 Low level
50274	Uint8	0	0	1	Digital Input 2 Event only
50275	Uint16	0	0	65535	Digital Input 2 Average
7116	Uint8	0	0	10	Send SMS
8116	String	0	0	160	SMS Text
50280	Uint8	0	0	3	Digital Input 3 Priority
50281	Uint8	3	0	6	Digital Input 3 Operand
50282	Uint8	0	0	1	Digital Input 3 High level
50283	Uint8	0	0	1	Digital Input 3 Low level
50284	Uint8	0	0	1	Digital Input 3 Event only
50285	Uint16	0	0	65535	Digital Input 3 Average
7117	Uint8	0	0	10	Send SMS
8117	String	0	0	160	SMS Text
7117	Uint8	0	0	10	Send SMS
8117	String	0	0	160	SMS Text
50300	Uint8	0	0	3	Digital Output 2 Priority
50301	Uint8	3	0	6	Digital Output 2 Operand
50302	Uint8	0	0	1	Digital Output 2 High level
50303	Uint8	0	0	1	Digital Output 2 Low level
50304	Uint8	0	0	1	Digital Output 2 Event only
50305	Uint16	1	0	65535	Digital Output 2 Average
7119	Uint8	0	0	10	Send SMS
8119	String	0	0	160	SMS Text

9.15 OBD II (blue-tooth)

9.15.1 1st OBD II (blue-tooth) property parameter priority (ID=40100)

Parameter defines OBD II property type of priority: 0 is disabled, 1 – low, 2 – high, 3 - panic.

Minimum value	Maximum value	Default value	Goes with (depends on) parameters	Value type
0	3	0	1st OBD II (blue-tooth) property parameter operand (ID=40101) 1st OBD II (blue-tooth) property parameter High level (ID=40102) 1st OBD II (blue-tooth) property parameter Low level (ID=40103) 1st OBD II (blue-tooth) property parameter Event only (ID=40104) 1st OBD II (blue-tooth) property parameters Send SMS to (ID=7038) 1st OBD II (blue-tooth) property parameters SMS Text (ID=8038)	Uint8

9.15.2 1st OBD II (blue-tooth) property parameter operand (ID=40101)

Parameter defines when event is sent: 0 – on range exit, 1 – on range entrance, 2 – both, 3 – monitoring, 4 – hysteresis, 5 – on changes, 6 – on delta change.

Minimum value	Maximum value	Default value	Goes with (depends on) parameters	Value type
0	6	3	1st OBD II (blue-tooth) property parameter priority (ID=40100) 1st OBD II (blue-tooth) property parameter High level (ID=40102) 1st OBD II (blue-tooth) property parameter Low level (ID=40103) 1st OBD II (blue-tooth) property parameter Event only (ID=40104) 1st OBD II (blue-tooth) property parameters Send SMS to (ID=7038) 1st OBD II (blue-tooth) property parameters SMS Text (ID=8038)	Uint8

9.15.3 1st OBD II (blue-tooth) property parameter High level (ID=40102)

Parameter defines high value of triggered OBD II property. This parameter is used to set thresholds for OBD II properties to generate events.

Minimum value	Maximum value	Default value	Goes with (depends on) parameters	Value type
0	255	0	1st OBD II (blue-tooth) property parameter priority (ID=40100) 1st OBD II (blue-tooth) property parameter operand (ID=40101) 1st OBD II (blue-tooth) property parameter Low level (ID=40103) 1st OBD II (blue-tooth) property parameter Event only (ID=40104) 1st OBD II (blue-tooth) property	Uint8

			parameters Send SMS to (ID=7038) 1st OBD II (blue-tooth) property parameters SMS Text (ID=8038)	

9.15.4 1st OBD II (blue-tooth) property parameter Low level (ID=40103)

Parameter defines low value of triggered OBD II property. This parameter is used to set thresholds for OBD II properties to generate events.

Minimum value	Maximum value	Default value	Goes with (depends on) parameters	Value type
0	255	0	1st OBD II (blue-tooth) property parameter priority (ID=40100) 1st OBD II (blue-tooth) property parameter operand (ID=40101) 1st OBD II (blue-tooth) property parameter High level (ID=40102) 1st OBD II (blue-tooth) property parameter Event only (ID=40104) 1st OBD II (blue-tooth) property parameters Send SMS to (ID=7038) 1st OBD II (blue-tooth) property parameters SMS Text (ID=8038)	Uint8

9.15.5 1st OBD II (blue-tooth) property parameter Event only (ID=40104)

Parameter defines when OBD II element value is sent: 0 – with every AVL packet, 1 – on event only. On event means that OBD II element value is included to AVL packet only when this particular event happens. With regular, periodic records such OBD II element value is not included.

Minimal value	Maximum value	Default value	Goes with (depends on) parameters	Value type
0	1	0	1st OBD II (blue-tooth) property parameter priority (ID=40100) 1st OBD II (blue-tooth) property parameter operand (ID=40101) 1st OBD II (blue-tooth) property parameter High level (ID=40102) 1st OBD II (blue-tooth) property parameter Low level (ID=40103) 1st OBD II (blue-tooth) property parameters Send SMS to (ID=7038) 1st OBD II (blue-tooth) property parameters SMS Text (ID=8038)	Uint8

9.15.6 1st OBD II (blue-tooth) property parameters Send SMS to (ID=7038)

Enable/Disable SMS event sending. 0 – Disable, 1-10 SMS will be sent to configured GSM number.

Minimal value	Maximum value	Default value	Goes with (depends on) parameters	Value type
0	10	0	GSM Predefined Numbers (ID=6000-6009) 1st OBD II (blue-tooth) property parameter priority (ID=40100) 1st OBD II (blue-tooth) property parameter operand (ID=40101) 1st OBD II (blue-tooth) property parameter High level (ID=40102) 1st OBD II (blue-tooth) property parameter Low level (ID=40103) 1st OBD II (blue-tooth) property parameter Event only (ID=40104) 1st OBD II (blue-tooth) property parameters SMS Text (ID=8038)	Uint8

9.15.7 1st OBD II (blue-tooth) property parameters SMS Text (ID=8038)

Configure 1st OBD II (blue-tooth) I/O SMS event text here.

Minimal value	Maximum value	Default value	Goes with (depends on) parameters	Value type
0	160	Number of DTC	1st OBD II (blue-tooth) property parameter priority (ID=40100) 1st OBD II (blue-tooth) property parameter operand (ID=40101) 1st OBD II (blue-tooth) property parameter High level (ID=40102) 1st OBD II (blue-tooth) property parameter Low level (ID=40103) 1st OBD II (blue-tooth) property parameter Event only (ID=40104) 1st OBD II (blue-tooth) property parameters Send SMS to (ID=7038)	S8[160]

9.15.8 All OBD II (blue-tooth) I/O elements parameters property ID

Parameter Name	Priority	Operand	High level	Low level	Event only	Send SMS to	SMS text
Number Of DTC	40100	40101	40102	40103	40104	7038	8038
Engine Load	40110	40111	40112	40113	40114	7039	8039
Coolant Temperature	40120	40121	40122	40123	40124	7040	8040
Short Fuel Trim	40130	40131	40132	40133	40134	7041	8041
Fuel Pressure	40140	40141	40142	40143	40144	7042	8042
Intake Map	40150	40151	40152	40153	40154	7043	8043
Engine RPM	40160	40161	40162	40163	40164	7044	8044
Vehicle speed	40170	40171	40172	40173	40174	7045	8045
Timing advance	40180	40181	40182	40183	40184	7046	8046
Intake air temperature	40190	40191	40192	40193	40194	7047	8047
MAF	40200	40201	40202	40203	40204	7048	8048
Throttle position	40210	40211	40212	40213	40214	7049	8049
Run time since engine start	40220	40221	40222	40223	40224	7050	8050
Distance traveled MIL on	40230	40231	40232	40233	40234	7051	8051

Parameter Name	Priority	Operand	High level	Low level	Event only	Send SMS to	SMS text
Relative fuel rail pressure	40240	40241	40242	40243	40244	7052	8052
Direct fuel rail pressure	40250	40251	40252	40253	40254	7053	8053
Commanded EGR	40260	40261	40262	40263	40264	7054	8054
EGR error	40270	40271	40272	40273	40274	7055	8055
Fuel level	40280	40281	40282	40283	40284	7056	8056
Distance traveled since codes clear	40290	40291	40292	40293	40294	7057	8057
Barometric pressure	40300	40301	40302	40303	40304	7058	8058
Control module voltage	40310	40311	40312	40313	40314	7059	8059
Absolute load value	40320	40321	40322	40323	40324	7060	8060
Ambient air temperature	40330	40331	40332	40333	40334	7061	8061
Time run with MIL on	40340	40341	40342	40343	40344	7062	8062
Time since trouble codes cleared	40350	40351	40352	40353	40354	7063	8063
Absolute fuel rail pressure	40360	40361	40362	40363	40364	7064	8064
Hybrid battery pack remaining life	40370	40371	40372	40373	40374	7065	8065
Engine oil temperature	40380	40381	40382	40383	40384	7066	8066
Fuel injection timing	40390	40391	40392	40393	40394	7067	8067
Fuel Rate	40400	40401	40402	40403	40404	7068	8068

All OBD II (blue-tooth) I/O parameters configuration settings are described in “FMB2YX Protocols” document.

10 MOUNTING RECOMMENDATIONS

10.1 Connecting Wires

- Wires should be connected while module is not plugged in.
- Wires should be fastened to the other wires or non-moving parts. Try to avoid heat emitting and moving objects near the wires.
- The connections should not be seen very clearly. If factory isolation was removed while connecting wires, it should be applied again.
- If the wires are placed in the exterior or in places where they can be damaged or exposed to heat, humidity, dirt, etc., additional isolation should be applied.
- Wires cannot be connected to the board computers or control units.

10.2 Connecting Power Source

- Be sure that after the car computer falls asleep, power is still available on chosen wire. Depending on car, this may happen in 5 to 30 minutes period.
- When module is connected, be sure to measure voltage again if it did not decrease.
- It is recommended to connect to the main power cable in the fuse box.
- Use 3A, 125V external fuse.

10.3 Connecting Ignition Wire

- Be sure to check if it is a real ignition wire – power does not disappear while starting the engine.
- Check if this is not an ACC wire (when key is in the first position, most electronics of the vehicle are available).
- Check if power is still available when you turn off any of vehicles devices.
- Ignition is connected to the ignition relay output. As alternative, any other relay, which has power output, when ignition is on, may be chosen.

10.4 Connecting Ground Wire

- Ground wire is connected to the vehicle frame or metal parts that are fixed to the frame.
- If the wire is fixed with the bolt, the loop must be connected to the end of the wire.
- For better contact scrub paint from the place where loop is connected.

PAY ATTENTION! Connecting the power supply must be carried out in a very low impedance point on-board vehicle network. These points in the car are the battery terminals. Therefore, we recommend connecting the power of FMB2YX (wire GND and POWER) directly to the battery terminals. Another valid option is to connect the wires to the main POWER cable inside the fuse box (if there is none, then to the power supply where the fuses of vehicle's computer are), wire GND must be connected in a special point, designed to connect GND vehicle computer. Connecting the GND at an arbitrary point to the mass of the car is unacceptable, as static and dynamic potentials on the line GND will be unpredictable, which can lead to unstable FMB2YX and even its failure.

11 FMB2YX installation instruction

FMB2YX is the device that has internal GNSS and GSM antenna.

Internal GNSS antenna device should be mounted with the sticker view to the open sky (metal free) with not less than ¾ of metal free area as shown in **Figure 52**.

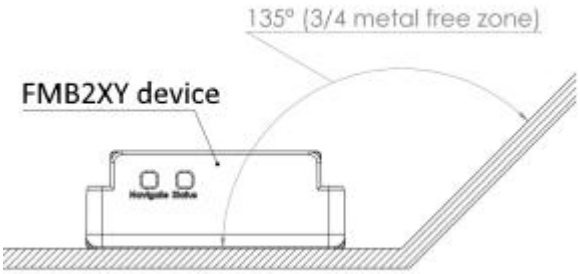

Figure 52. ¾ metal free zone illustration

FMB2YX has IP67 protection class. Top performance is reached if mounted outside of the vehicle.

The device has 4 mounting holes on the edges, and can be tightened with screws, adhesive tape or plastic straps.

FMB2YX area with sticker and GNSS antenna is shown in **Figure 53.**

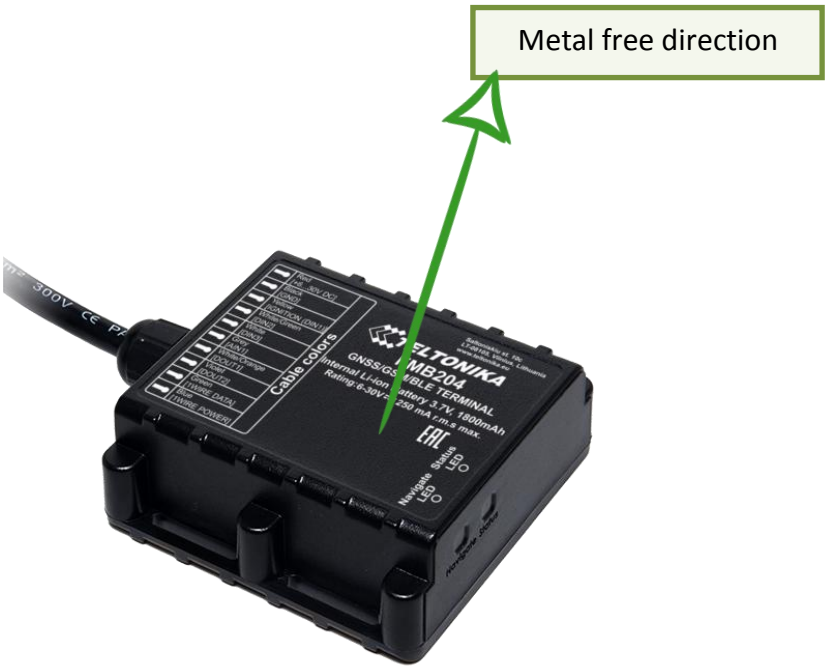

Figure 53. FMB2YX view

11.1 Possible mounting zones

11.1.1 Trucks

It is strongly recommended to mount FMB2YX outside of the vehicle with the sticker direction to a sky, see F**igure 54**.

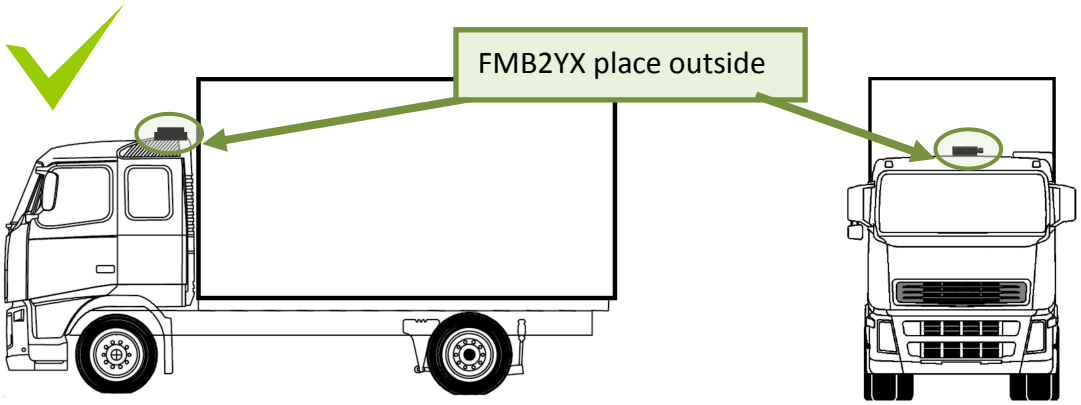

Figure 54. Possible mounting place on truck

Most commercial trucks have plastic hood in front of the vehicle.

It is recommended to mount FMB2YX under the hood. Power cord output of the device should be at the bottom. If it is not possible, if a front hood is made of some kind of metal, the device can be mounted inside the car on the front panel as close as possible to the front window. See **Figure 55**.

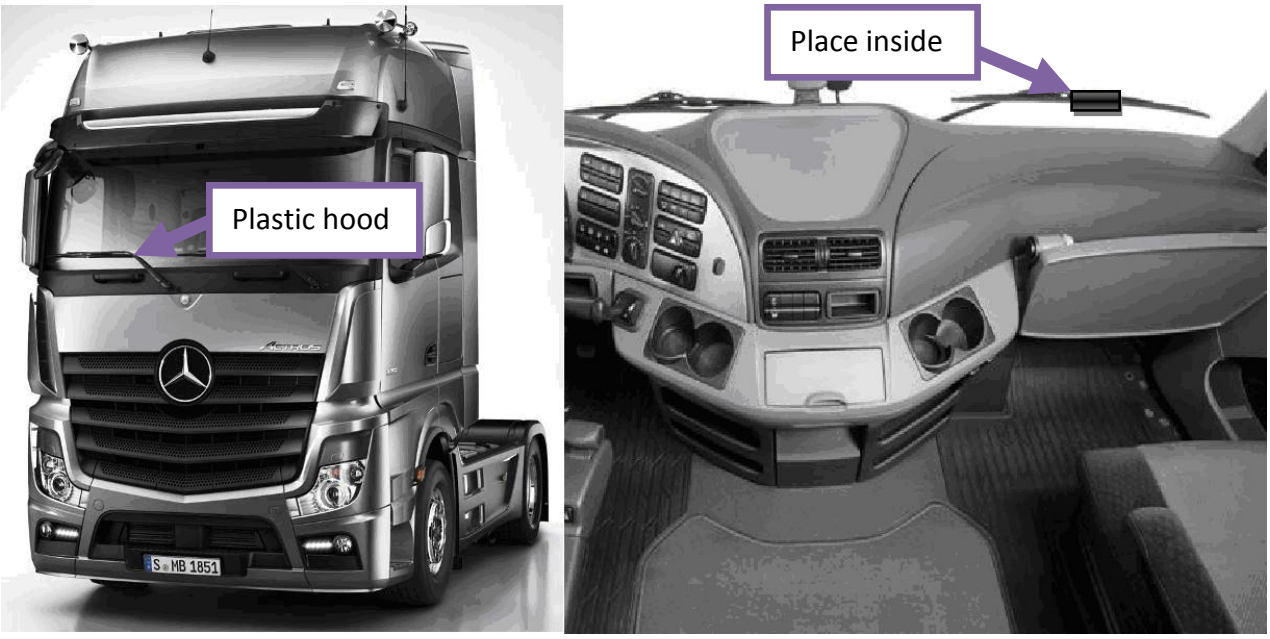

Figure 55. Possible mounting places in trucks

11.1.2 Tractors

It is strongly recommended to mount FMB2YX outside of the tractor with the sticker direction to a sky, see **Figure 56**.

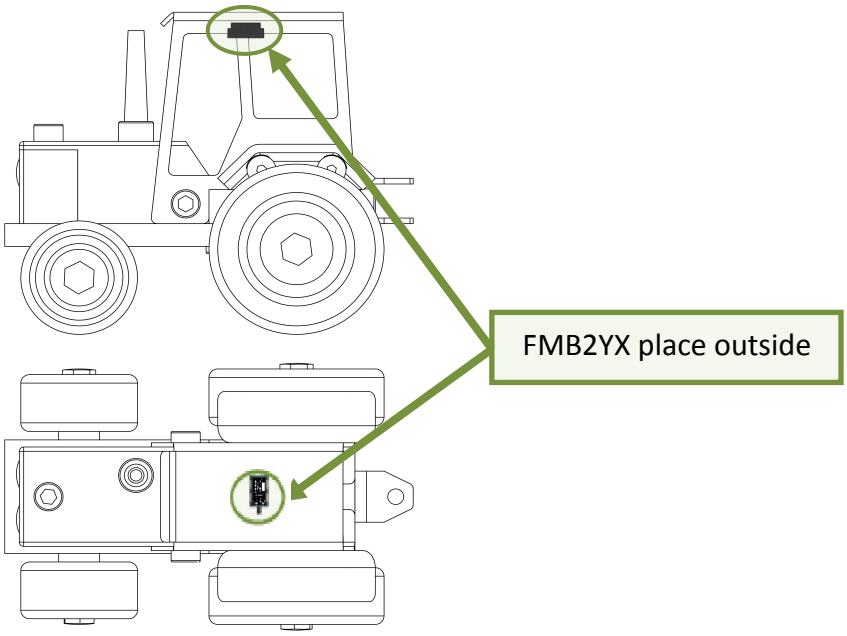

Figure 56. Possible mounting place on tractor

11.1.3 Motor bikes

Device should be mounted on outside

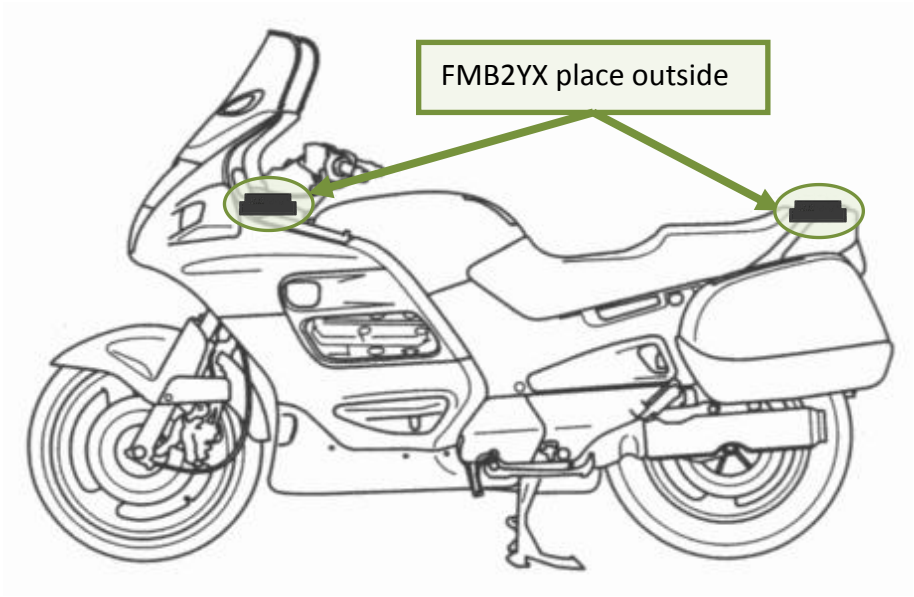

Figure 57. Possible mounting places for motorbikes

FMB2YX cannot be mounted under the seat!

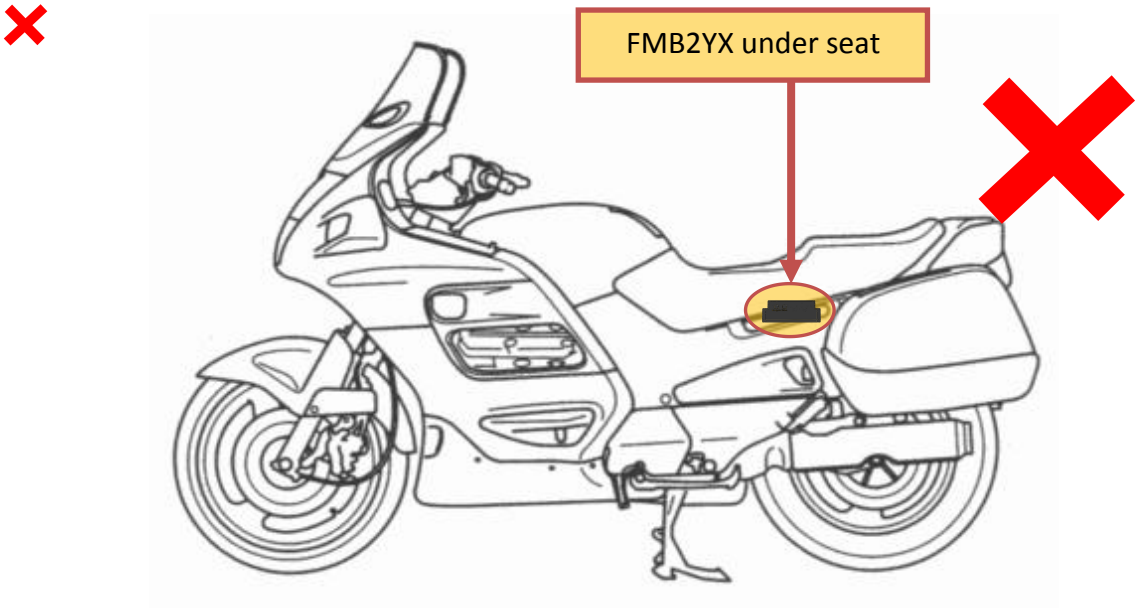

Figure 58. Not mount device under seat

11.1.4 Light vehicles

Most light vehicles has oblique front window that opens most part of interior front panel.

FMB2YX can be mounted under the plastic panel behind the front window, with the sticker direction to a window (sky). Look to **Figure 59.**

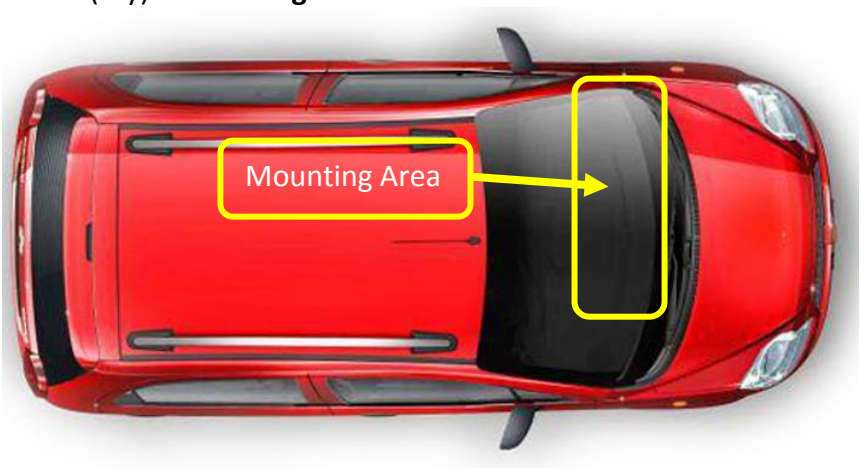

Figure 59. Light vehicle

11.1.5 Recommended mounting positions

1. Best FMB2YX mounting position is outside of vehicle with any metal above the device.

2. Recommended deviation from horizontal axis of vehicle max 3-5°, as shown in **Figure 60**.

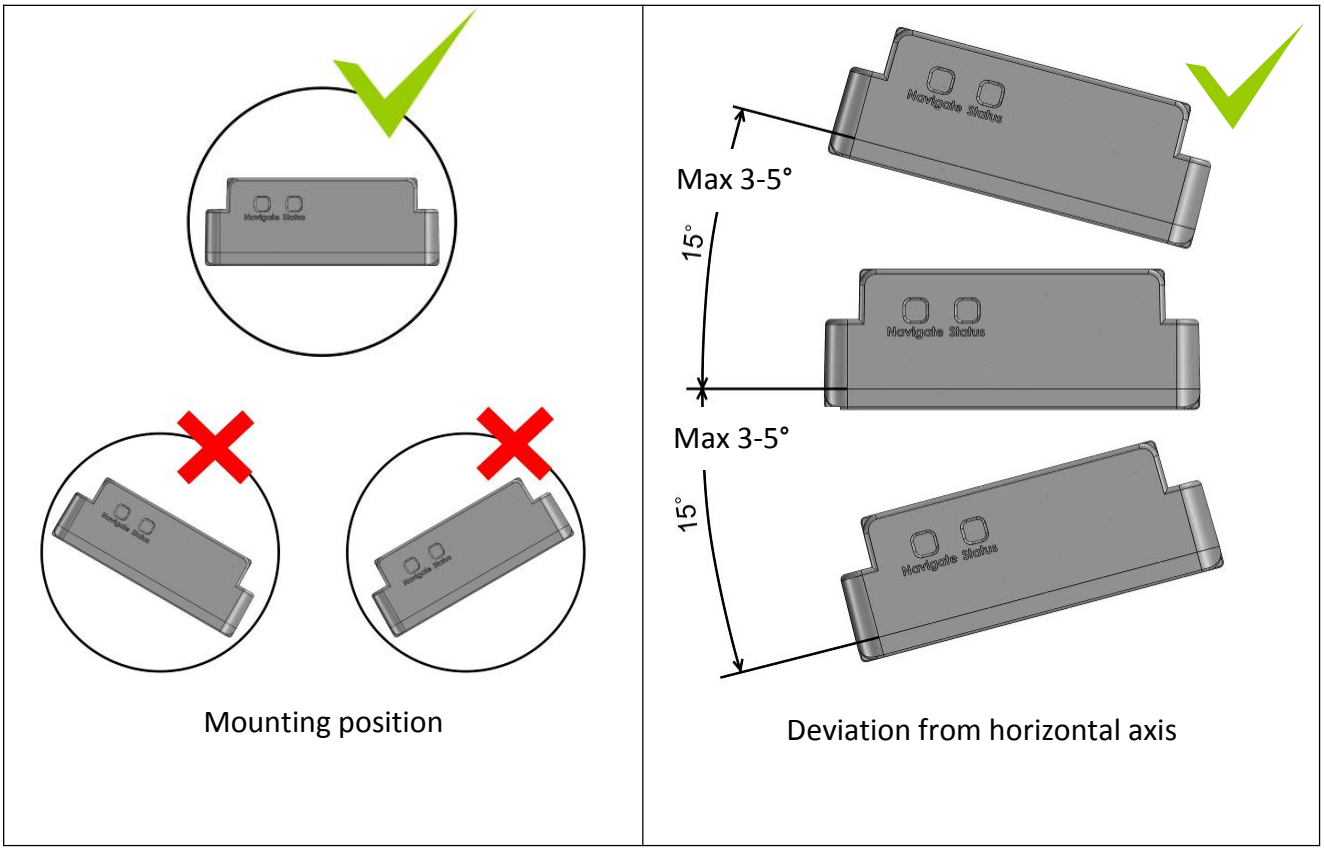

Figure 60. Mounting position and recommended deviation from horizontal axis of vehicle

Mounting position and recommended deviation from longitudinal axis of vehicle ±2°, as shown in **Figure 61**.

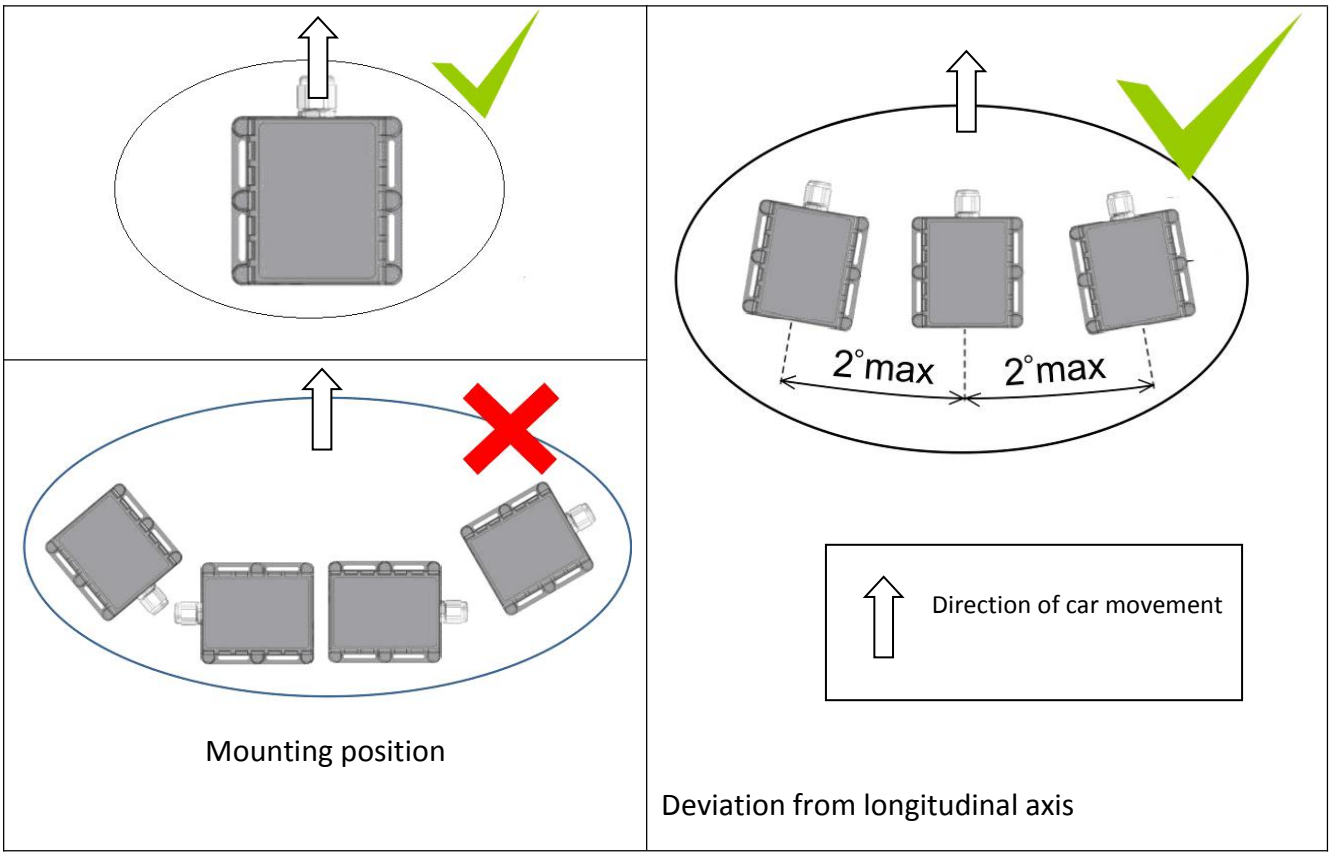

Figure 191. Mounting position and recommended deviation from longitudinal axes of vehicle

11.1.6 Restrictions

1. **FMB2YX device can not be mounted inside in the vehicle door!**

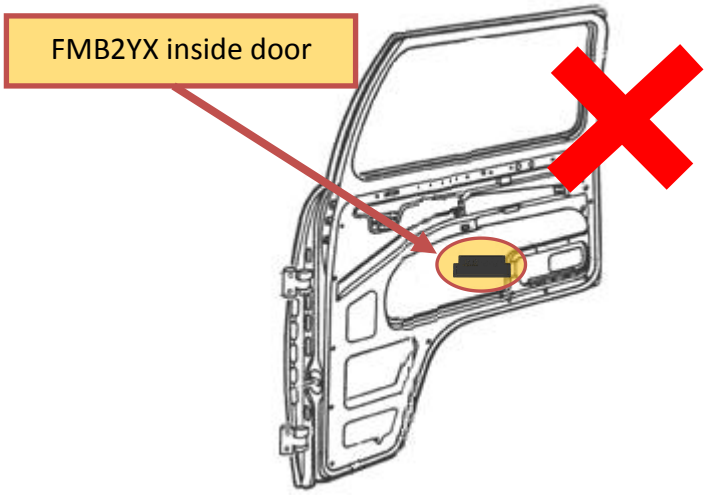

Figure 62. Not mounting FMB2YX device inside door of the car

2. FMB2YX device cannot be mounted inside the vehicle!

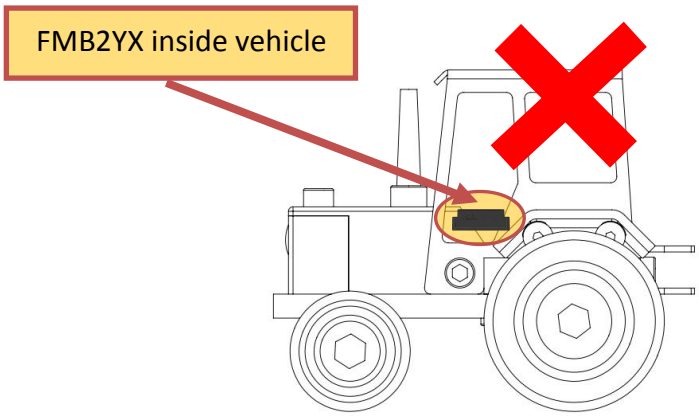

Figure 203. Not mount device inside the vehicle

11.1.7 Connecting power wires

1. Device should be connected directly to battery. Power supply: 6V/12V/24V.

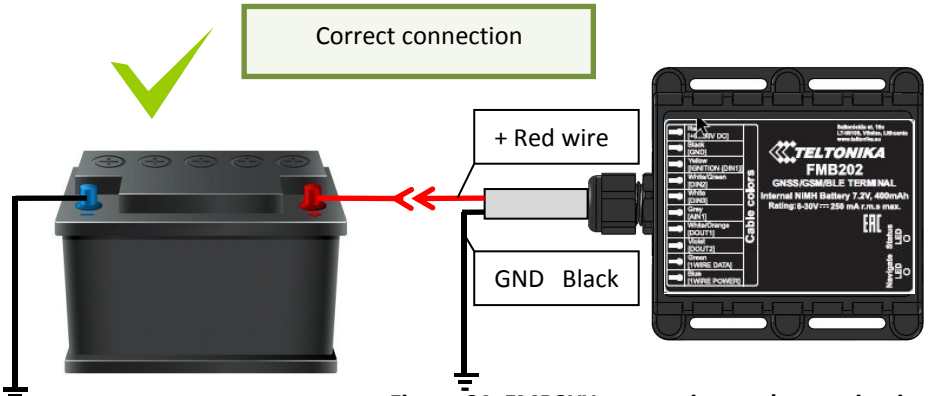

Figure 64. FMB2YX connection to the car circuit

2. If FMB2YX is used in 6V system and power cables are extended.

Extension cable resistance should be less than 60 mΩ in sum of both, positive and negative, wires. 30 mΩ for single wire.

11.1.8 Other recommendations

1. If using Green driving function device should be mounted horizontally to work properly, see **Figure 60 and 61**.

2. If the vehicle is not used for a half of month or more it is recommended to disconnect FMB2YX to save vehicle battery.

12 Downloading log using “Hercules” application

1 STEP:

- set special chars – ASCII
- Set PORT and start listen (screen below)

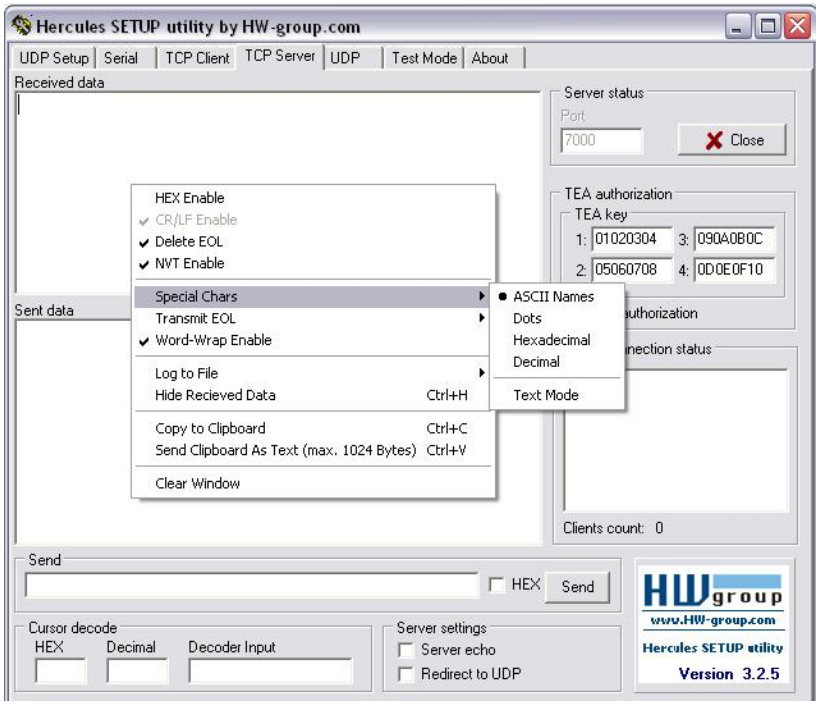

Figure 215. Set special characters to ASCII

2 STEP:

- Set directory for file download
- Enable “Log to file” as show below

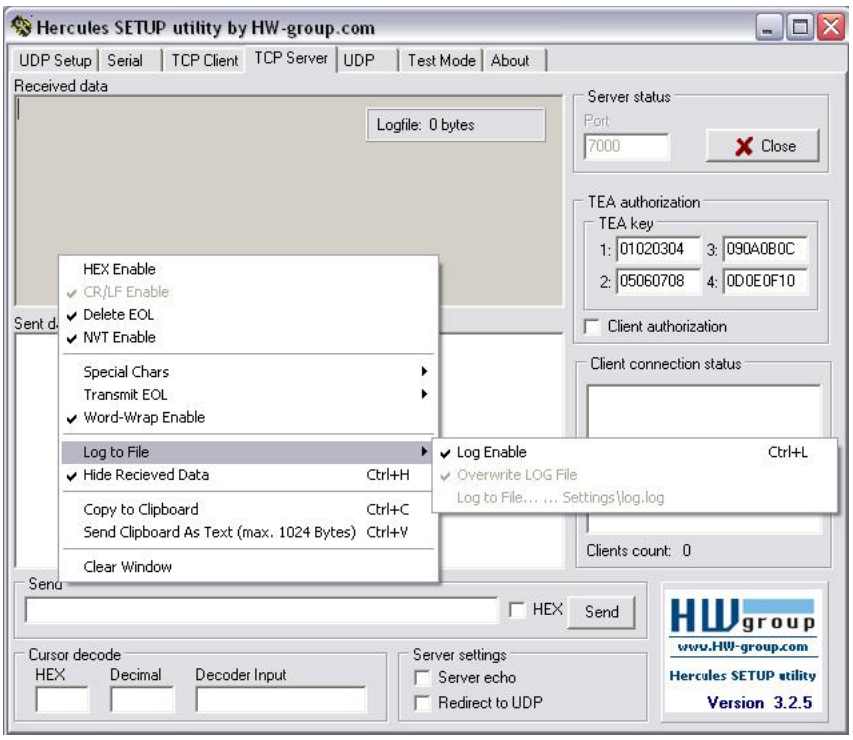

Figure 66. Enable logging with Hercules

3 STEP:
"Terminal" Command sending using Hercules

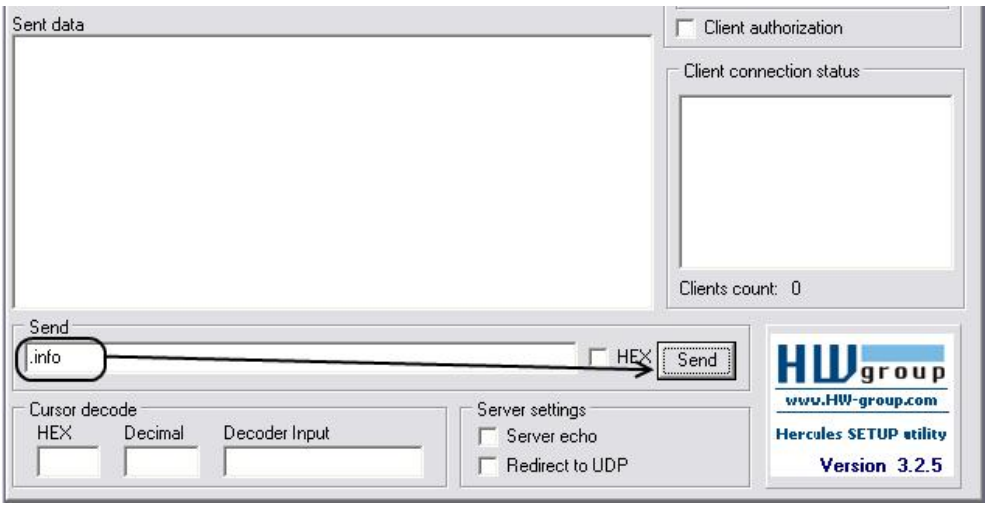

Figure 67. Send command with Hercules

13 CHANGE LOG

	Date	Version	Comments
1	2018.04.09	0.01	Draft Document created
2	2018.04.19	0.02	Minor changes; Configuring information added;
3	2018.06.11	0.03	Minor changes
4	2018.06.29	0.04	Driver link updated
5	2018.06.29	0.05	COM port picture updated
6	2018.07.24	0.06	Minor changes
7	2018.08.28	0.07	Changes to current values and format
8	2018.08.21	0.08	Blue-tooth description updated
9	2018.09.25	0.09	Drivers link updated