Quick Start Guide V1

RUT240

QUALITY SYSTEM CERTIFICATION
DNV·GL
ISO 9001

Wiki knowledge base
https://wiki.teltonika.lt/

FRONT VIEW

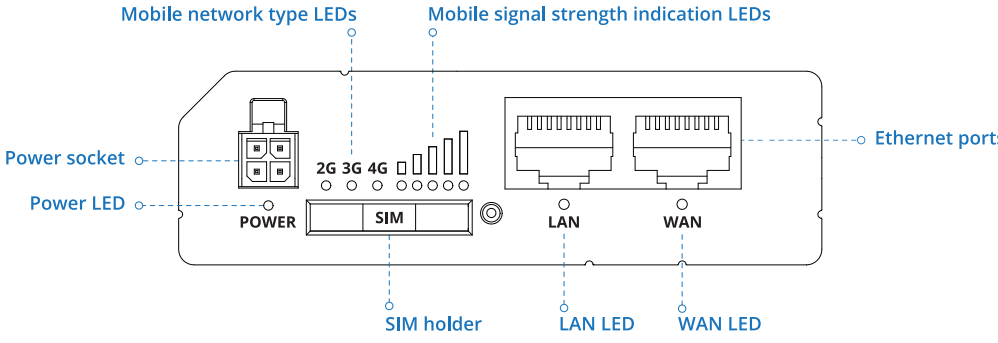

BACK VIEW

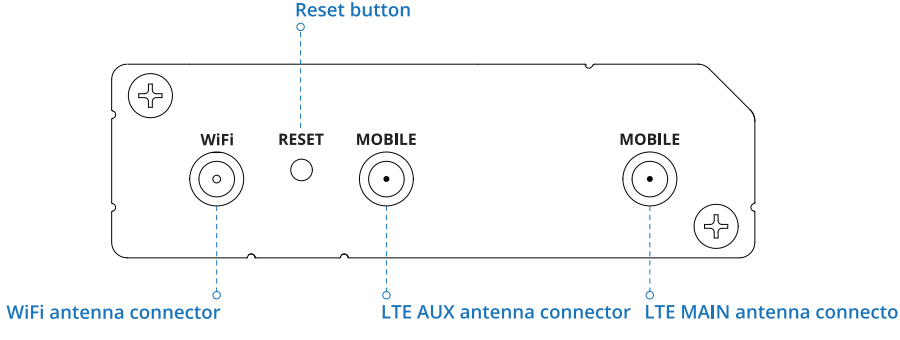

TELTONIKA

POWER SOCKET PINOUT

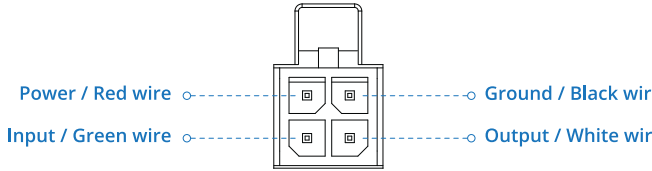

HARDWARE INSTALLATION

1. Push the SIM holder button with the SIM needle.
2. Pull out the SIM holder.
3. Insert your SIM card into the SIM holder.
4. Slide the SIM holder back into the router.
5. Attach LTE and WiFi antennas.
6. Connect the power adapter to the socket on the front of the device. Then plug the other end of the power adapter into a power socket.
7. Connect to the device wirelessly (SSID: RUT240_**** (unique to each device)) or use an Ethernet cable (connected to LAN port).

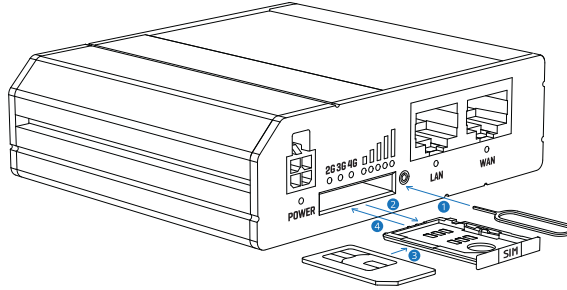

LOGIN TO DEVICE

1. To enter the router's Web interface (WebUI), type **http://192.168.1.1** into the URL field of your Internet browser.
2. Use login information shown in image A when prompted for authentication.
3. After you login, you will be prompted to change your password for security reasons. The new password must contain at least 8 characters, including at least one uppercase letter, one lowercase letter and one digit. This step is mandatory and **you will not be able to interact with the router's WebUI before you change the password.**
4. When you change the router's password, the **Configuration Wizard** will start. The **Configuration Wizard** is a tool used to setup some of the router's main operating parameters.
5. Go to the **Status > Network** page and pay attention to the **Signal Strength** indication (image B). To maximize the cellular performance try adjusting the antennas or changing the location of your device to achieve the best signal conditions.

A.

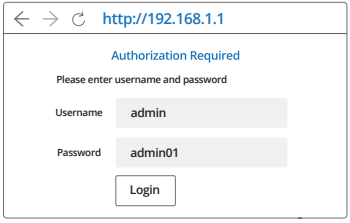

B.

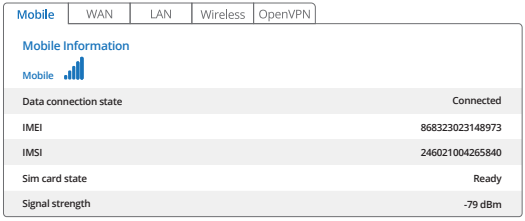

TECHNICAL INFORMATION

Radio specifications	
RF technologies	GSM, GPRS, EDGE, UMTS/HSPA+, LTE, WiFi
Max RF power	33 dBm@GSM, 24 dBm@WCDMA, 23 dBm@LTE, 20 dBm@WiFi
Bundled antennas specifications*	
GSM/WCDMA/L TE antenna	698-960/1710-2690 MHz, 50 Ω, VSWR<3, gain** 3 dBi, omnidirectional, SMA male connector
WiFi antenna	2400-2483.5 MHz, 50 Ω, VSWR<2, gain** 5 dBi, omnidirectional, RP-SMA male connector

*Order code dependent.
**Higher gain antenna can be connected to compensate for cable attenuation when a cable is used. The user is responsible for the compliance with the legal regulations.

TELTONIKA

SAFETY INFORMATION

RUT240 router must be used in compliance with any and all applicable national and international laws and with any special restrictions regulating the utilization of the communication module in prescribed applications and environments.

[EN] English	Hereby, TELTONIKA declares that this RUT240 is in compliance with the essential requirements and other relevant provisions of Directive CE/RED.
[BG] Bulgarian	С настоящето, TELTONIKA декларира, че RUT240 е в съответствие със съществените изисквания и другитеприложими разпоредби на Директива CE/RED.
[CZ] Czech	TELTONIKA tímto prohlašuje, že RUT240 splňuje základní požadavky a všechna příslušná ustanoveni Směrnice CE/RED.
[DE] German	Hiermit erklärt TELTONIKA dass sich das Gerät RUT240 in Übereinstimmung mit den grundlegenden Anforderungen und den übrigen einschlägigen Bestimmungen der Richtlinie CE/RED befindet.
[DK] Danish	Undertegnede TELTONIKA erklærer herved, at følgende udstyr RUT240 overholder de væsentlige krav og øvrige relevante krav i direktiv CE/RED.
[EE] Estonian	Käesolevaga kinnitab TELTONIKA seadme RUT240 vastavust direktiivi CE/RED põhinõuetele ja nimetatud direktiivist tulenevatele teistele asjakohastele sätetele.
[ES] Spanish	Por la presente, TELTONIKA declara que este RUT240 cumple con los requisitos esenciales y otras exigencias relevantes de la Directiva CE/RED.
[FI] Finish	TELTONIKA vakuuttaa täten että RUT240 tyyppinen laite on direktiivin CE/RED oleellisten vaatimusten ja sitä koskevien direktiivin muiden ehtojen mukainen.
[FR] French	TELTONIKA déclare que cette RUT240 est conforme aux exigences essentielles et aux autres dispositions pertinentes de la directive CE /RED.
[GR] Greek	ΜΕ ΤΗΝ ΠΑΡΟΥΣΑ Ο ΚΑΤΑΣΚΕΥΑΣΤΗΣ TELTONIKA ΔΗΛΩΝΕΙ ΟΤΙ RUT240 ΣΥΜΜΟΡΦΩΝΕΤΑΙ ΠΡΟΣ ΤΙΣ ΟΥΣΙΩΔΕΙΣ ΑΠΑΙΤΗΣΕΙΣ ΚΑΙ ΤΙΣ ΛΟΙΠΕΣ ΣΧΕΤΙΚΕΣ ΔΙΑΤΑΞΕΙΣ ΤΗΣ ΟΔΗΓΙΑΣ CE/RED.
[HU] Hungarian	A TELTONIKA ezzennel kijelenti, hogy a RUT240 típusú berendezés teljesíti az alapvető követelményeket és más CE/RED irányelvben meghatározott vonatkozó rendelkezéseket.
[IT] Italian	Con la presente TELTONIKA dichiara che questo RUT240 è conforme ai requisiti essenziali ed alle altre disposizioni pertinenti stabilite dalla direttiva CE/RED.
[LT] Lithuanian	Šiuo dokumentu UAB TELTONIKA deklaruoja, kad šis RUT240 atitinka esminius reikalavimus ir kitas CE/RED Direktyvos nuostatas.
[LV] Latvian	Ar šo TELTONIKA deklarē, ka RUT240 atbilst Direktīvas CE/RED būtiskajām prasībām un citiem ar to saistītajiem noteikumiem.
[NL] Dutch	Hierbij verklaart TELTONIKA dat het toestel l RUT240 in overeenstemming is met de essentiële eisen en de andere relevante bepalingen van richtlijn CE/RED.
[NO] Norwegian	TELTONIKA Erklærer herved at RUT240 er i samsvar med de grunnleggende krav og øvrige relevante krav i direktiv CE/RED.
[PL] Polish	Niniejszym TELTONIKA deklaruje że RUT240 jest zgodny z zasadniczymi wymaganiami i innymi właściwymi postanowieniami Dyrektywy CE/RED.
[PT] Portuguese	Eu, TELTONIKA declaro que o RUT240 cumpre os requisitos essenciais e outras provisões relevantes da Directiva CE/RED.
[RO] Romanian	Prin prezenta, TELTONIKA declară că aparatul RUT240 este în conformitate cu cerințele esențiale și cu alte prevederi pertinente ale Directivei CE/RED.
[SE] Swedish	Härmed intygar TELTONIKA att denna RUT240 är i överensstämmelse med de väsentliga egenskapskrav och övriga relevanta bestämmelser som framgår av direktiv CE/RED.
[SI] Slovenian	TELTONIKA izjavlja, da je ta RUT240 v skladu z bistvenimi zahtevami in drugimi relevantnimi določili direktive CE/RED.

Declaration of Conformity (DoC) can be obtained by visiting https://wiki.teltonika.lt/

[EN] Instruction Manual: Connect the power adapter to turn on the device. Open 192.168.1.1 in your web browser to configure it. More information on https://wiki.teltonika.lt

[BG] Инструкция: Свържете адаптера на захранване, за да включите устройството. Отворете 192.168.1.1 в уеб браузър, за да настроите продукта. Повече информация в https://wiki.teltonika.lt

[CZ] Návod k použití: Připojte napájecí adaptér k zapnutí přístroje. Otevřete 192.168.1.1 ve webovém prohlížeči pro konfiguraci produktu. Více informací najdete v https://wiki.teltonika.lt

[DE] Bedienungsanleitung: Verbinden Sie das Netzteil, um das Gerät einzuschalten. Öffnen Sie 192.168.1.1 in einem Web Browser, um das Produkt zu konfigurieren. Weitere Informationen im https://wiki.teltonika.lt

[DK] Instruktionsbog: Tilslut strømadapteren for at tænde for enheden. Åbn 192.168.1.1 i en webbrowser til at konfigurere produktet. Mere information i https://wiki.teltonika.lt

[EE] Kasutusjuhend: Ühendage toiteadapter seadme sisselülitamiseks. Avatud 192.168.1.1 in veebilehitseja seadistada toodet. Rohkem teavet https://wiki.teltonika.lt

[ES] Manual de instrucciones: Conecte el adaptador de alimentación para encender la unidad. Abra 192.168.1.1 en un navegador web para configurar el producto. Más información en https://wiki.teltonika.lt

[FI] Käyttöohje: Kytke virtalähde päälle laitteen. Avaa 192.168.1.1 in selaimen määrittää tuotteen. Lisää tietoa https://wiki.teltonika.lt

[FR] Mode d'emploi: Connectez l'adaptateur d'alimentation pour allumer l'appareil. Ouvrez 192.168.1.1 dans un navigateur Web pour configurer le produit. Plus d'informations dans https://wiki.teltonika.lt

[GR] εγχειρίδιο οδηγιών: Συνδέστε τον προσαρμογέα τροφοδοσίας για να ενεργοποιήσετε τη μονάδα. Ανοίξτε 192.168.1.1 σε ένα πρόγραμμα περιήγησης στο Web για να διαμορφώσετε το προϊόν. Περισσότερες πληροφορίες στο https://wiki.teltonika.lt

[HU] Használati utasítás: Csatlakoztassa a hálózati adaptert a készülék bekapcsolásához. Megnyitása 192.168.1.1 egy webböngészőben beállítani a terméket. Több információ https://wiki.teltonika.lt

[IT] Manuale di istruzioni: Collegare l'adattatore di alimentazione per accendere l'unità. Aprire 192.168.1.1 in un browser Web per configurare il prodotto. Maggiori informazioni in https://wiki.teltonika.lt

[LT] Naudojimosi instrukcija: Prijunkite maitinimo adapterį, įjunkite įrenginį. Interneto naršyklėje atidarykite adresą 192.168.1.1 - galite konfigūruoti gaminį. Daugiau informacijos rasite https://wiki.teltonika.lt

[LV] Lietošanas instrukcija: Pievienojiet Strāvas adapteri, lai ieslēgtu ierīci. Atvērt 192.168.1.1 ar interneta pārlūku, lai konfigurētu produktu. Plašāka informācija https://wiki.teltonika.lt

[NL] Handleiding: Sluit voedingsadapter aan op het apparaat in te schakelen. Open 192.168.1.1 in een webbrowser om het product te configureren. Meer informatie in https://wiki.teltonika.lt

[NO] Bruksanvisningen: Koble strømadapteren for å slå på enheten. Åpne 192.168.1.1 i en nettleser for å konfigurere produktet. Mer informasjon på https://wiki.teltonika.lt

[PL] Instrukcja obsługi: Podłącz adapter zasilania, aby włączyć urządzenie. Otwórz 192.168.1.1 w przeglądarce internetowej, aby skonfigurować urządzenie. Więcej informacji w https://wiki.teltonika.lt

[PT] Manual de instruções: Conecte o adaptador de alimentação para ligar o aparelho. Abra 192.168.1.1 em um navegador da web para configurar o produto. Mais informações em https://wiki.teltonika.lt

[RO] Instrucțiuni de utilizare: Conectați adaptorul de alimentare pentru a porni aparatul. Deschide 192.168.1.1 întrun browser web pentru a configura produsul. Mai multe informații în https://wiki.teltonika.lt

[SE] Instruktionsmanual: Anslut nätadap tern för att slå på enheten. Öppna 192.168.1.1 i en webbläsare för att konfigurera produkten. Mer information på https://wiki.teltonika.lt

[SI] Navodila: Priključite napajalnik za vklop naprave. Odprite 192.168.1.1 v spletnem brskalniku nastaviti izdelek. Več informacij v https://wiki.teltonika.lt

[SK] NávoZd na použitie: Pripojte napájací adaptér k zapnutiu prístroja. Otvorte 192.168.1.1 vo webovom prehliadači pre konfiguráciu produktu. Viac informácií nájdete v https://wiki.teltonika.lt

For more information visit www.teltonika.com

This sign on the package means that all used electronic and electric equipment should not be mixed with general household waste.

Hereby, Teltonika declares that the radio equipment type RUT240 is in compliance with Directives: 2014/53/EU, 2014/35/EU, 2014/30/EU. The full text of the EU declaration of conformity is available at the following internet address: http://teltonika.lt/product/rut240/

©2019 Teltonika