MEITRACK® GPS Vehicle Tracker

User Guide

MVT100

Copyright © 2013 Meitrack Group All rights reserved.

Contents

1. Copyright and Disclaimer ..... - 3 -
2. Product Overview ..... - 3 -
3. Applications ..... - 3 -
4. Product Function and Specifications ..... - 3 -
   - 4.1 Product Function ..... - 3 -
   - 3.2 Specifications ..... - 4 -
5. MVT100 and Accessories ..... - 5 -
6. View ..... - 5 -
7. First Use ..... - 5 -
   - 7.1 Install SIM Card ..... - 5 -
   - 7.2 Charging ..... - 6 -
   - 7.3 LED Indications ..... - 6 -
   - 7.4 Track by Calling ..... - 7 -
     - 7.4.1 Multiple Phone numbers– A71 ..... - 8 -
     - 7.4.2 Sleep Mode – A73 ..... - 8 -
     - 7.4.3 Geo-fence Alarm – B05 ..... - 9 -
     - 7.4.4 Set Anti-theft – B21 ..... - 9 -
     - 7.4.5 Time Zone– B35 ..... - 10 -
   - 7.5 Configure by Computer ..... - 10 -
     - 7.5.1 SMS Tracking ..... - 11 -
     - 7.5.2 GPRS Tracking ..... - 14 -
8. Installation ..... - 17 -
   - 8.1 Install I/O Cable ..... - 17 -
     - 8.1.1 Power/GND (PIN1, PIN2) ..... - 18 -
     - 8.1.2 Digital Input (PIN 3, Negative Triggering)/SOS ..... - 18 -
     - 8.1.3 Digital Input (PIN10, Positive Triggering) ..... - 18 -
     - 8.1.4 Output (PIN6) ..... - 18 -
     - 8.1.5 AD Input (PIN5) ..... - 19 -
   - 8.2 Mount the MVT100 unit ..... - 19 -

Copyright © 2013 Meitrack Group All rights reserved.

1. Copyright and Disclaimer

Copyright © 2013 MEITRACK. All rights reserve

MEITRACK and are trademarks that belong to Meitrack Group

The user manual may be changed without prior notification.

This user manual, or any part thereof, may not be reproduced for any purpose whatsoever without the written authorization of Meiligao (MEITRACK), or transmitted in any form, either electronically or mechanically, including photocopying and recording.

In no event shall Meiligao (MEITRACK) be liable for direct, indirect, special, incidental, or consequential damages (including but not limited to economic loss, personal injury, and loss of asset and property) arising out of the use or inability or illegality to use the product or documentation.

2. Product Overview

The MTV100 is a distinct GPS Tracker that can be used with automobiles, motorcycles, yachts and boats. The MVT100's unique design makes its appearance both elegant and cool. Once installed on a motorcycle, the product cannot be easily noticed as a result of its clever design. This product is easy to install and is built with an internal GPS and GSM antenna. The MVT100 is both waterproof and dust proof, making it an exceptional GPS tracker for your car, motorcycle, yacht and boat.

3. Applications

- Vehicle Real Time Tracking
- Car Security/Anti-Hijack
- Tracking for Motorcycles, Yachts and Boats
- Fleet Management

4. Product Function and Specifications

4.1 Product Function

- SiRF III GPS and Quad Band GSM 850/900/1800/1900Mhz
- AGPS (with GSM Base Station ID)
- Waterproof (IP66)
- Inbuilt GPS and GSM Antenna
- Track by SMS/GPRS (TCP/UDP) (MEITRACK Protocol)

Copyright © 2013 Meitrack Group All rights reserved.

- Track on Demand
- Track by Time Interval
- Track by Distance Interval
- Track on Mobile Phone
- Internal 4Mb Memory for Logging
- Inbuilt Motion Sensor
- 850mAh Internal Backup Battery
- SOS Alarm
- Geo-fence Alarm
- GPS Blind Area Alarm
- Low Battery Alarm
- Speeding Alarm
- Tow Alarm
- External Power Cut Alarm
- Mileage Report
- Engine Cut (Engine immobilization)
- Inbuilt Super Magnet (optional)
- I/O: 2 Digital Input (1 negative triggering and 1 positive triggering), 1 Analog Input Detection, 1 Output

3.2 Specifications

Items	Specifications
Dimension	110x72x39mm
Weight	170g
Input Voltage	DC 9V~36V/1.5A
Back-up Battery	850mAh/3.7V
Power consumption	65mA standby current
Operating Temperature	-20 ℃~55℃
Humidity	5%~95%
Work Time	43 hours in power-saving mode and 10 hours in normal mode
LED	2 LED lights to show GPS, GSM and other status
Button	1 SOS and 1 power on/off
Microphone	None
Memory	4M Byte
Sensor	Motion Sensor
GSM Frequency	GSM 850/900/1800/1900MHz
GPS Chip	Latest GPS SIRF-Star III chipset
GPS Sensitivity	-159dB
Positioning	10 meters, 2D RMS

Copyright © 2013 Meitrack Group All rights reserved.

Accuracy	
I/O	2 Digital Input (1 negative triggering and 1 positive triggering) 1 Analog Input Detection 1 Output 1 USB port for configuration only

5. MVT100 and Accessories

MVT100 with SOS Button Battery and I/O Cable

3M Sticker

Screws

USB Data Cable

CD

6. View

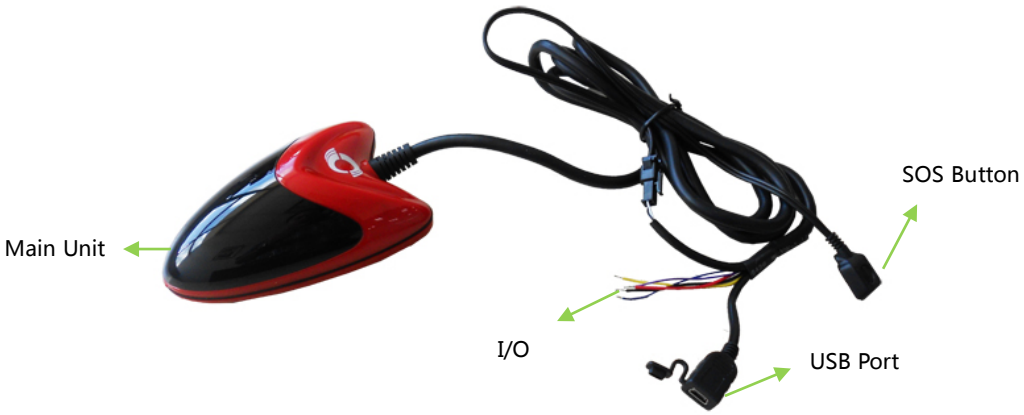

7. First Use

7.1 Install SIM Card

Check that the SIM has not run out of credit (test the SIM in a phone to make sure it can send and receive SMS);
Check that the SIM Lock code is turned off;
If you require the function of sending an SMS location report to the authorized phone number when it makes a call to the MVT100, please make sure the SIM installed supports displaying caller ID.

Before installing the SIM card, turn off the power for MVT100.

Copyright © 2013 Meitrack Group All rights reserved.

Unscrew and remove cover.

Insert the SIM card by sliding it into the card holder with the chip module facing to the connectors on PCB.

Replace the cover and screw it up.

7.2 Charging

Please connect GND (-Black) and Power (+Red) wires to 12V or 24 external power and make sure to charge the battery for at least 3 hours. 8 hours is highly appreciated.

Configuration and testing suggested prior to installation.

7.3 LED Indications

Press and hold the Power On/Off button for 3~5 seconds to turn on/off MVT100.

GPS LED (Blue)	
On	One button is pressed or input is active.
Flashing (every 0.1 second)	Initializing or back-up battery power is low
Flashing (0.1 second on and 2.9 seconds off)	MVT100 has a GPS fix
Flashing (1 second on and 2 seconds off)	MVT100 has no GPS fix
GSM LED (Green)	
On	A call is coming in / a call is being made
Flashing (every 0.1 second)	Initializing
Flashing (0.1 second on and 2.9 seconds off)	MVT100 is connected to the GSM network
Flashing (1 second on and 2 seconds off)	MVT100 is not connected to the GSM network

Copyright © 2013 Meitrack Group All rights reserved.

7.4 Track by Calling

Make a call to MVT100 and it will report with one SMS.

For example,

Now,110727 02:48,V,16,23Km/h,61%,http://maps.google.com/maps?f=q&hl=en&q=22.540103,114.082329&ie=UTF8&z=16&iwloc=addr&om=1

Click on the link then the location can be shown directly on Google Maps on your mobile phone.

Report description:

Now,110727 02:48,V,16,23Km/h,61%,http://maps.google.com/maps?f=q&hl=en&q=22.540103,114.082329&ie=UTF8&z=16&iwloc=addr&om=1

Content	Description	Note
Now	Current Location	Alarm Type
110721 16:40	Date & Time: 21 July, 2011, 16:40pm	Date & Time in YYMMDD HH:MM
V	No GPS fixed	GPS Status Indicator: A = valid, V = invalid
10	GSM signal=10	GSM Signal. Decimal Digit (0~31)
0Km/h	Speed=0	KM/h. Decimal digit
97%	Battery Power: 97%	Battery Power Balance (Percentage)
http://maps.google.com/maps?f=q&hl=en&q=22.540103,114.082329&ie=UTF8&z=16&iwloc=addr&om=1	Latitude: 22.513015 Longitude: 114.057235	Google Maps Web Link with Latitude and Longitude. Click on the link to get the location.

If your mobile cannot visit HTTP websites, input the latitude and longitude into Google Maps as the following picture shows to get the position:

Copyright © 2013 Meitrack Group All rights reserved.

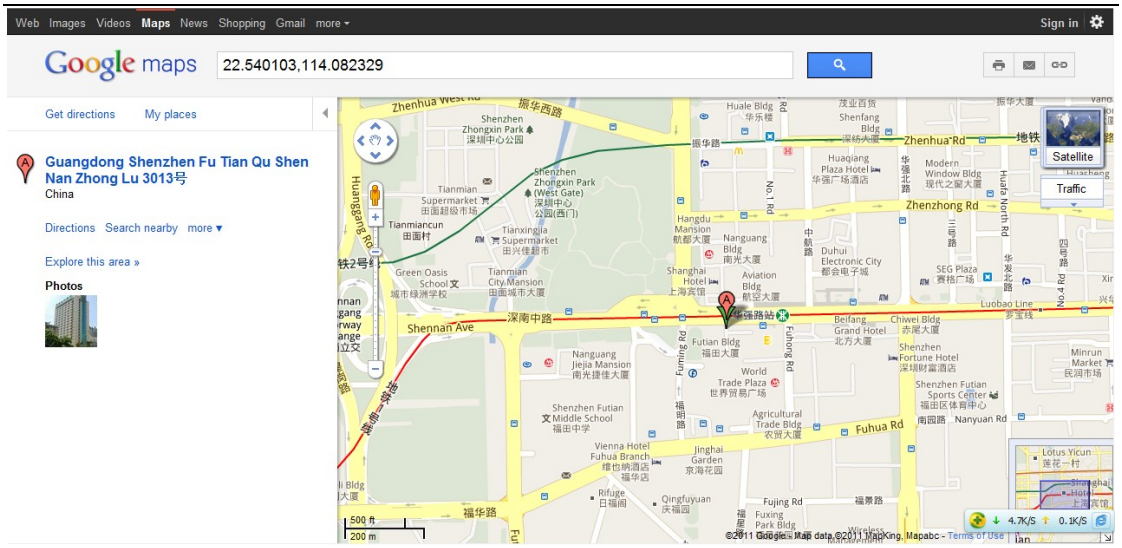

More SMS commands

You can configure MVT100 by mobile phone or by computer using the MEITRACK Parameter Editor.

For more details, please refer to part 6.5 **Configure by Computer**.

Note:

1. *Password is 4 digits only and defaulted as 0000. You can change the password by Parameter Editor and SMS command.*
2. *MVT100 will only accept commands from a user with the correct password and report SMS report to the user. If preauthorized phone number was set, only this phone number can receive SMS reports.*

7.4.1 Multiple Phone numbers– A71

Command: 0000, A71, phone number 1, phone number 2, phone number 3

SMS Get: IMEI, A71, OK

Note：

Authorize a phone number for SOS alarm, calling for location report, geo-fence alarm, and low battery alarm.

Phone Number: Max 16 characters.

If no preset phone number, it is empty (default is empty).

Send command “0000, A71” to delete all phone numbers.

When the SOS button is pressed, MVT100 will make a call to phone number 1, 2 and 3. It will stop calling when one number answers.

Example: 0000,A71,13811111111,13822222222,13833333333

SMS Get: 353358017784062,A71,OK

7.4.2 Sleep Mode – A73

Command: 0000,A73,X

SMS Get: IMEI,A73,OK

Note:

Copyright © 2013 Meitrack Group All rights reserved.

This setting is for power saving.

X=0, turn off sleep mode (default)

X=1, normal sleep. GSM module work, GPS module work by sleep mode intermittently. The device can work 25% longer than no sleep mode. Note: this is not recommended for users who set "track by interval" or short time interval, because it will affect the completeness of tracking.

X=2, deep sleep, the tracker will enter this mode after it is inactive or stationary(No SOS/any triggered by the button/input/incoming calls/message/movement) for 5 minutes. GPS module stops working and GSM module enters sleep mode. The tracker remains in this mode until it is activated by SOS/any triggered by the button/input/incoming calls/message/movement. After that, it will repeat above processes.

Note: In any condition, the device will directly quit the sleep mode and back to normal working mode by SMS or GPRS command to turn off the sleep mode.

Example: 0000,A73,2

SMS Get: 353358017784062,A73,OK

7.4.3 Geo-fence Alarm – B05

Command: B05,P,latitude,longitude,radius,in,out

SMS Get: IMEI,B05,OK

Note:

P: 1 to 8. Max 8 Geo-fence waypoints can be set.

Latitude: Latitude in decimal degrees of the waypoint center.

Longitude: Longitude in decimal degrees of the waypoint center.

Radius: [1, 4294967295] in meters.

In = 0, turn off the alarm when the tracker enters the waypoint;

In = 1, turn on the alarm when the tracker enters the waypoint.

Out = 0, turn off the alarm when the tracker exits the waypoint;

Out = 1, turn on the alarm when the tracker exits the waypoint.

Example: 0000,B05,1,22.91319,114.07988,1000,0,1

SMS Get: 353358017784062,B05,OK

Once the tracker goes outside of the circle (center: 22.91319,114.07988 and radius 1000 meters), the following message will be received.

353358017784062,ExitGEO,22.918186,114.089823,080229123816,A,10,22,16,32,1,21,6667,850,,0000,,

7.4.4 Set Anti-theft – B21

Command: 0000,B21,Status

SMS Get: IMEI,B21,OK

Note:

Status=1, turn on Anti-theft (default); the device alarms when input 2 (positive input) is active;

Status=0, turn off Anti-theft; the device doesn't alarm when input 2 (positive input) is active.

Copyright © 2013 Meitrack Group All rights reserved.

7.4.5 Time Zone– B35

Command: 0000,B35,T

SMS Get: IMEI,B35,OK

Note:

Default time of the tracker is GMT. You can use this command to change the time on your tracker to your local time. This command is for SMS tracking only.

Time zone of SMS report is separated with that of GPRS data. If you need to set time zone in GPRS data, please use SMS command: 0000, B36, T

T=0, to turn off this function.

T=[-32768,32767] to set time difference in minutes to GMT.

For those ahead of GMT, just input the time difference in minutes directly. For example, GMT+8, W000000,032,480

'-'is required for those behind GMT. For example, W000000,032,-120.

Example: 0000,B35,480

SMS Get: 353358017784062,B35,OK

For more details regarding SMS commands, please refer to MEITRACK SMS Protocol.

7.5 Configure by Computer

This part shows you the basics in how to use the **MEITRACK Parameter Editor.**

Note: Don't connect MVT100 to external battery when configuring.

Please refer to the **MEITRACK Parameter Editor User Guide** for more information regarding configuration and functions.

Run 'PL2303_Prolific_DriverInstaller' to install the driver for the USB data cable.

Note: PL2303_Prolific_DriverInstaller is in the folder 'USB-232 Driver' in the CD.

Connect the USB Data Cable between MVT100 and PC.

Open **Device Manager** (Device Manager is under Control Panel\System and Security\System). You can then find 'Prolific USB-to-Serial Comm Port' as the following picture shows.

Copyright © 2013 Meitrack Group All rights reserved.

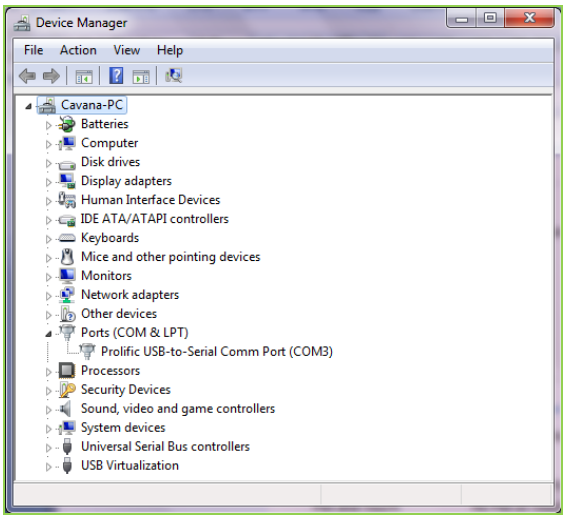

Note: Remember this Com number. It needs to be input into the MEITRACK Parameter Editor. It is COM3 in this example and it would be COM4 or COM5… in your computer.

Run 'MEITRACK Parameter Editor.exe' and the following configuration window will pop up:

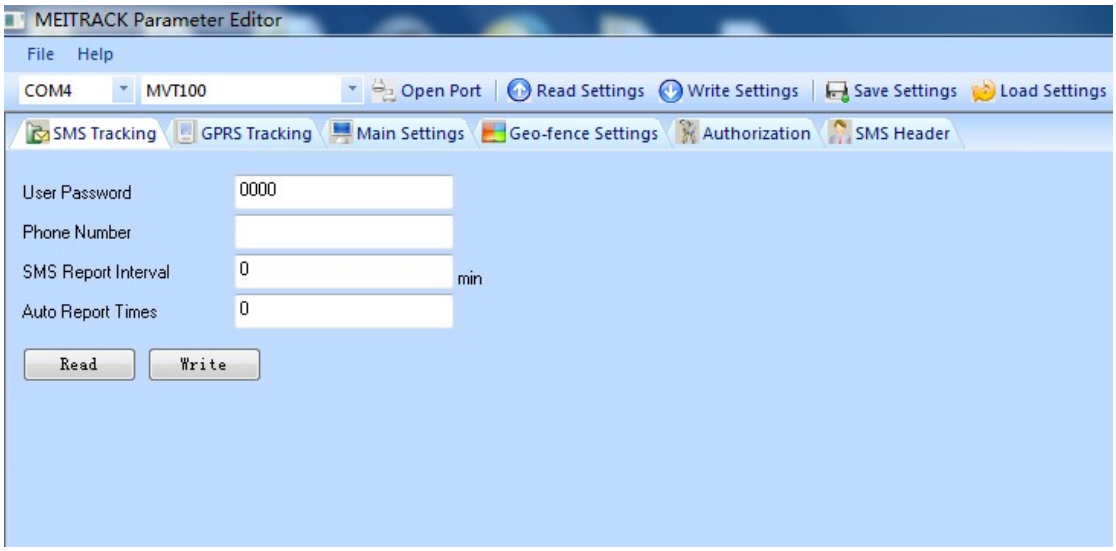

Choose the correct Com number and terminal type in previous Device Manager then click the 'Open Port' button. Click 'Read Settings' button to show the default or previous settings of the tracker.

Note: MEITRACK Parameter Editor is in the CD. The language will be automatically adjusted to be the same as your PC operation system's language. Please use "Ctrl+L" to change the language.

7.5.1 SMS Tracking

7.5.1.1 Track by Preset Interval

Click Tap I: SMS Tracking

Copyright © 2013 Meitrack Group All rights reserved.

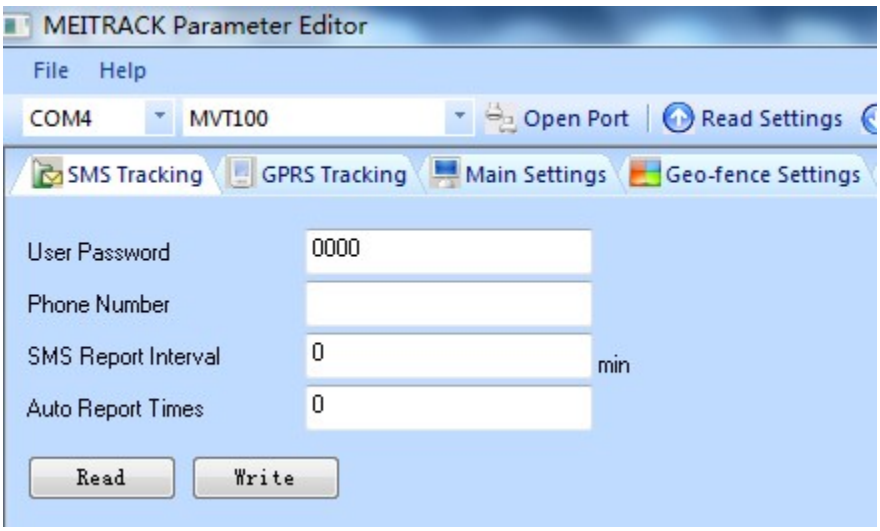

Item	Description
User Password	SMS password for sending SMS commands and defaulted as 0000.
Phone Number	A phone number to receive SMS location reports.
SMS Report Interval	Track by time interval via SMS. Set time interval for SMS location report. = 0, stop tracking by time interval (default); = [1,65535], track by interval in minute.
Auto Report Times	= 0, unlimited times for report. = [1,255], it will stop reporting when reaching preset times
Read	Read current tracker's settings for above items.
Write	Write above settings to the tracker.

7.5.1.2 SMS Report

Click Tap V: Authorization

Copyright © 2013 Meitrack Group All rights reserved.

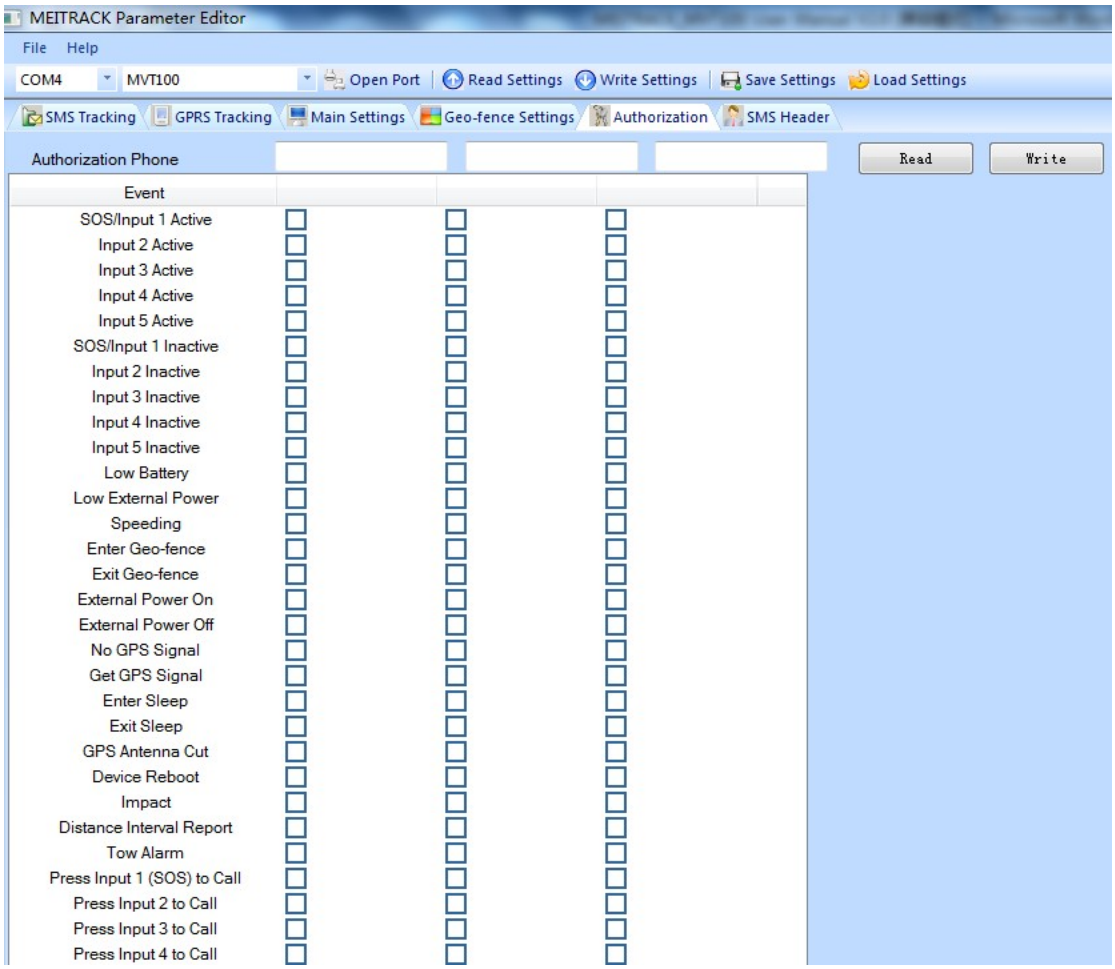

Item	Description
Authorization Phone	A phone number to receive selected event's SMS reports.
Event	Selected event's SMS reports will be sent to authorized phone number. For more details, please refer to MEITRACK GPRS/SMS Protocol. For description of events from SOS/Input 1 Active to Tow Alarm, please refer to tap II **GPRS Tracking**. Other events description, please refer to below chart.
Read	Read current tracker's settings for above items.
Write	Write above settings to the tracker.

Event Description:

Event	Description (If the box is ticked, authorized phone number will get event report by SMS or calling)
SOS/Input 1 Active	Report when input1 (SOS) is active/pressed.
Input 2 Active	Report when input 2 is active.

Copyright © 2013 Meitrack Group All rights reserved.

SOS/Input1 Inactive	Report when input 1 inactive (SOS released).
Input 2 Inactive	Report when input 2 inactive.
Low Battery	Report when backup battery's voltage is below 3.5V.
Low External Power	External power (car battery) is lower than predefined voltage. You can define voltage in Main Settings.
Speeding	Report when MVT100 speeds higher than the pre-set value. Value can be changed on tap III **Main Settings**
Enter Geo-fence	Report when MVT100 enters Geo-fence.
Exit Geo-fence	Report when MVT100 exits Geo-fence. Geo-fence can be changed on tap III **Main Settings**.
External Power On	Alarm when external power supply is on or recover.
External Power Off	Alarm when external power supply if off or cut.
No GPS Signal	Report when MVT100 enters GPS blind area or no GPS signal.
Get GPS Signal	Report when MVT100 exits GPS blind area or get GPS signal.
Enter Sleep	Report when MVT100 enters sleep mode.
Exit Sleep	Report when MVT100 exits sleep mode. Sleep mode can be changed on tap III **Main Settings**.
Device Reboot	Report when MVT100 is rebooting.
Heartbeat Report	Turn on heartbeat report You can define heartbeat interval on tap III **Main Settings.**
Heading Change Report	Auto report when tracker's direction changes over predefined angle You can define angle degree on tap III **Main Settings**.
Distance Interval Report	Track by distance. Interval can be changed on tap III **Main Settings**.
Tow Alarm	Alarm when the tracker trembles for a period of time. You can define tow time on tap III **Main Settings.**
Press Input 1 (SOS) to call	Make a call to authorized phone number when press input 1 (SOS).
Press Input 2 to call	Make a call to authorized phone number when press input 2.
Reject Incoming Call	Hand up incoming call automatically from correspondent authorized phone number.
Call for SMS Location Report	Reject incoming call or report SMS location when no answer.

7.5.2 GPRS Tracking

Click Tap II: GPRS Tracking

Copyright © 2013 Meitrack Group All rights reserved.

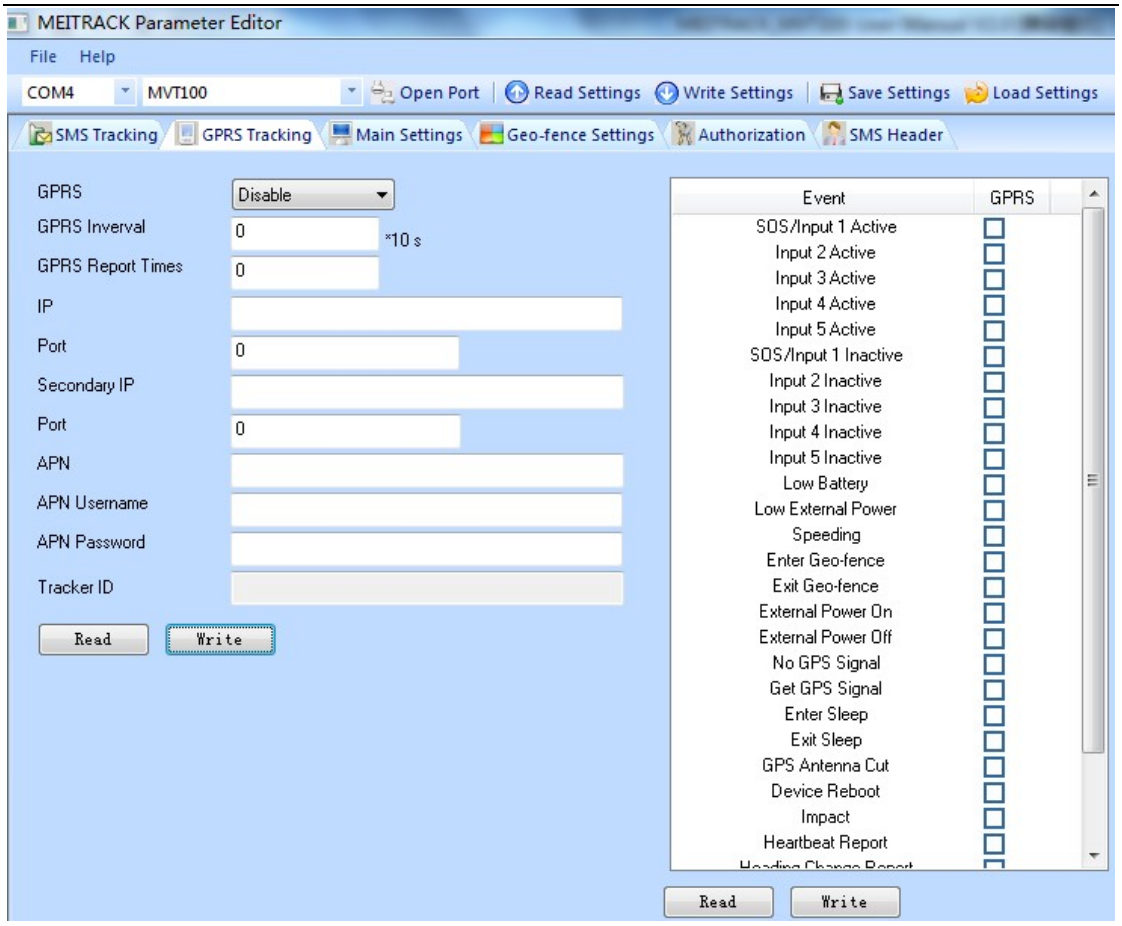

Item	Description
GPRS	Select TCP/UDP to enable GPRS communication.
GPRS Interval	Track by time interval via GPRS. Set time interval for GPRS tracking. Interval is in unit of 10 seconds. Interval = 0, stop tracking by time interval. Max time interval = 65535*10 seconds
GPRS Report Times	= 0, report without limit. = [1,65535], set report times, MVT100 will stop reporting when reaching the times.
IP & Port	Input server's IP address and port number.
Secondary IP and Port (Backup Server)	Input backup server's IP address and port number to avoid data losing when main server is down. The backup server will receive data automatically.
APN **APN user name** **APN password**	APN, APN username, APN password: max 32 bytes. If no username and password required, leave them blank.
Tracker ID	MVT100's IMEI. It is the only ID in GPRS packet.

Copyright © 2013 Meitrack Group All rights reserved.

Read	Read current tracker's settings for above items.
Write	Write above settings to the tracker.

Tick the box for receiving GPRS report.

Event Description:

Event	**Description** **(If the box is ticked, authorized phone number will get event report by SMS or calling)**
SOS/Input 1 Active	Report when input1 (SOS) is active/pressed.
Input 2 Active	Report when input 2 is active.
SOS/Input1 Inactive	Report when input 1 inactive (SOS released).
Input 2 Inactive	Report when input 2 inactive.
Low Battery	Report when backup battery's voltage is below 3.5V.
Low External Power	External power (car battery) is lower than predefined voltage. You can define voltage in Main Settings.
Speeding	Report when MVT100 speeds higher than the pre-set value. Value can be changed on tap III **Main Settings**
Enter Geo-fence	Report when MVT100 enters Geo-fence.
Exit Geo-fence	Report when MVT100 exits Geo-fence. Geo-fence can be changed on tap III **Main Settings**.
External Power On	Alarm when external power supply is on or recover.
External Power Off	Alarm when external power supply if off or cut.
No GPS Signal	Report when MVT100 enters GPS blind area or no GPS signal.
Get GPS Signal	Report when MVT100 exits GPS blind area or get GPS signal.
Enter Sleep	Report when MVT100 enters sleep mode.
Exit Sleep	Report when MVT100 exits sleep mode. Sleep mode can be changed on tap III **Main Settings**.
Device Reboot	Report when MVT100 is rebooting.
Heartbeat Report	Turn on heartbeat report You can define heartbeat interval on tap III **Main Settings.**
Heading Change Report	Auto report when tracker's direction changes over predefined angle You can define angle degree on tap III **Main Settings**.
Distance Interval Report	Track by distance. Interval can be changed on tap III **Main Settings**.
Tow Alarm	Alarm when the tracker trembles for a period of time. You can define tow time on tap III **Main Settings.**

For more information about GPRS settings, please refer to MEITRACK SMS/GPRS Protocol.

Copyright © 2013 Meitrack Group All rights reserved.

8. Installation

8.1 Install I/O Cable

The I/O cable is a 8-pin cable including power, analog input, negative input, output and USB port for configuration.

1	2	3	4	5	6	7	8	9	10
Power(+)	GND(-)	GND(-)	Input1(-)	Input2(+)	AD1	Out1	USB Port		

PIN	Color	Description
1 Power	Red	DC In (power source). Input voltage: 9V~36V. 12V suggested.
2 GND	Black	Ground
3 GND	Black	Ground, for connecting with temperature/fuel sensor etc.
4 Input1	White	Digital Input (negative triggering). Socket for SOS panic button. It also can be used for detecting the status of vehicle door. Vehicles from China, Korea, Japan are normally negative triggering.
5 Input2	Purple	Digital Input2 (positive triggering). It can be used for detecting ACC, and the status of vehicle door. Vehicles from Europe, America are normally positive triggering.
6 AD	Blue	10 Bits resolution analog input. 0~6V DC detection. It can be used to connect with temperature/fuel sensor etc.
7 Out	Yellow	Output. Low voltage (0V) when effective and open drain when ineffective. Output open drain sink voltage (ineffective): 45V max. Output low voltage sink current (effective): 200mA max. It can be used to connect with relay for engine immobilization.
8/9/10 USB Port ***(For Configuration Only)***	Green	TTL232 Rx (MVT100 Tx)
	Orange	TTL232 Tx (MVT100 Rx)
	Black	Ground

Copyright © 2013 Meitrack Group All rights reserved.

8.1.1 Power/GND (PIN1, PIN2)

Connect GND (-Black) and Power (+Red) wires to the battery of motorcycle/vehicle.

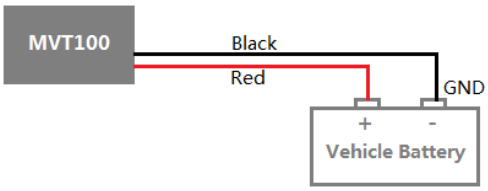

8.1.2 Digital Input (PIN 3, Negative Triggering)/SOS

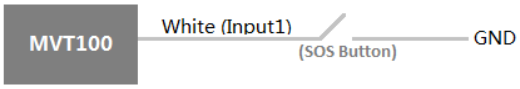

8.1.3 Digital Input (PIN10, Positive Triggering)

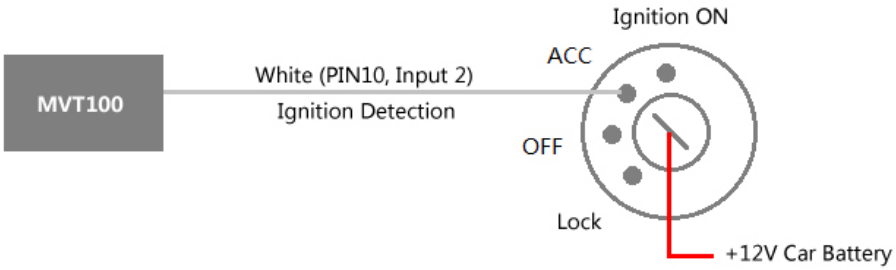

8.1.4 Output (PIN6)

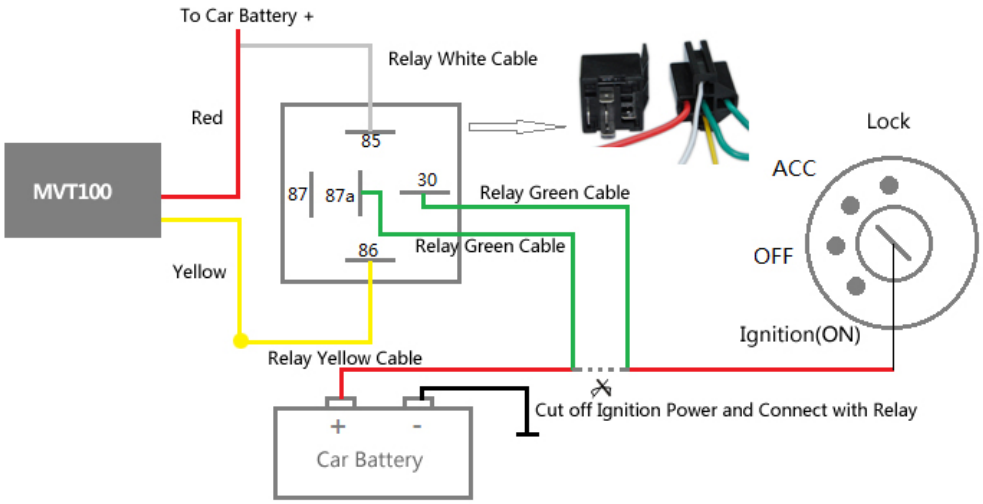

Copyright © 2013 Meitrack Group All rights reserved.

8.1.5 AD Input (PIN5)

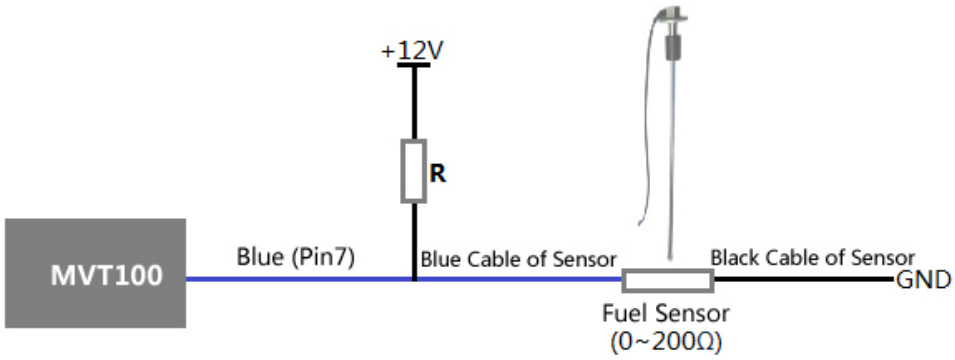

Note:

Fuel level sensors supplied by our company are resistance-type sensors with output resistance: 0-200Ω (ohm).

For the circuit shown on above figure, if VCC is 12V, R should be 200Ω (ohm) and if VCC is 24V then R should be 600Ω (ohm) to make the input range to AD1 or AD2 is 0-6V.

Below formula is for calculating the fuel percentage left for this fuel level sensor:

$$\text{Percentage Left} = = \frac{\text{AD value}}{1024 \text{ X } 2 - \text{AD value}} * 100\%$$

The value must be converted into decimal, for example, 0x0267 is 615 in decimal.

8.2 Mount the MVT100 unit

Three mounting options:

Option 1:

Using 3M sticker

Option 2:

Using Screws

Option 3:

Using internal super magnet

Please do not hesitate to email us at info@meitrack.com if you have any questions.

Copyright © 2013 Meitrack Group All rights reserved.