Japan Radio Law Test Report
(BLE)

Applicant:	Shenzhen DOOGEE Hengtong Technology CO., LTD
Address of Applicant:	B, 2/F, Building A4, Silicon Valley Power Digital Industrial Park, No. 22, Dafu Industrial Zone, Guanlan Aobei Community, Guanlan Street, Longhua New District, Shenzhen, Guangdong China
Product Name:	Portable Wireless Speaker
Model No.:	MG01 (More models are listed in Section 2.2)
Brand Name:	DOOGEE, DOOGEESmart, DOOGEE Eco
Test Standards:	Article 2 Paragraph 1 of Item 19 (WW)
Date of Sample Receipt:	Mar. 16, 2026
Date of Test:	Mar. 17 to May 08, 2026

Date of Report Issue:
Jul. 22, 2026

Prepared By:
Shenzhen Acote Technology Co., Ltd.
Room 719, Excellence Times Building, No. 27, Xinqiao 3rd Road, Xinqiao Community, Xinqiao Street, Bao'an District, Shenzhen, Guangdong Province, China

深圳市阿科特科技有限公司 测试专用章 Testing Service Shenzhen Acote Technology Co., Ltd.

Winner Zhang / Manager
Approved by

Aron Wu / Senior Engineer
Reviewed by

This document cannot be reproduced except in full, without prior written approval of the Company. Any unauthorized alteration, forgery or falsification of the content or appearance of this document is unlawful and offenders may be prosecuted to the fullest extent of the law. Unless otherwise stated the results shown in this test report refer only to the sample(s) tested and such sample(s) are retained for 90 days only.

Report Revision History

Rev.	Issue Date	Description
V00	Jul. 22, 2026	Initial Release This report is based on the original report (No. ACT-RF-260300302) issued by Shenzhen Acote Technology Co., Ltd. Only the trademark and model number have been updated. All other information remains unchanged. These changes do not require any testing.

Table of Contents

Cover Page **1**
Report Revision History **2**
Table of Contents **3**
1 Laboratory Introduction **4**
1.1 Laboratory Location 4
1.2 Laboratory Facility 4
1.3 Announcement 4
1.4 Disclaimer 4
2 Equipment Under Test Information **5**
2.1 Application Information 5
2.2 Product Information 5
2.3 EUT Technical Parameters 5
3 Test Information **6**
3.1 Test Methodology 6
3.2 Test Result Summary 6
3.3 Environment of test site 7
3.4 Measurement Uncertainty 8
3.5 Description of Support Units 8
3.6 Additions to, Deviations, or Exclusions from the Method 8
3.7 Test Instruments List 8
4 Test Configuration of EUT **9**
4.1 Channels Selected to Perform the Tests 9
4.2 Test mode 9
4.3 Test Configuration for Each Items 9
4.4 Test Setup Block 9
5 Technical requirements specification **11**
5.1 Frequency Tolerance 11
5.2 Occupied Bandwidth 12
5.3 Strength of Spurious Emission or Unwanted Emission 13
5.4 Antenna Power and Tolerance 14
5.5 Strength of Secondary Radiated Emission 15
5.6 Transmitting Antenna Absolute Gain 16
5.7 Main Lobe Width of Transmitting Antenna 17
5.8 Interference Suppression Function 18
6 Test Setup Photos **19**
7 EUT Constructional Details **19**

1 Laboratory Introduction

1.1 Laboratory Location

Company Name:	Shenzhen Acote Technology Co., Ltd.
Address:	Room 719, Excellence Times Building, No. 27, Xinqiao 3rd Road, Xinqiao Community, Xinqiao Street, Bao'an District, Shenzhen, Guangdong Province, China
Website:	www.acotelabs.com
Email:	Service@acotelabs.com
Tel.:	+86-0755-2788 9963

1.2 Laboratory Facility

Our company's laboratory facilities have received accreditation, certification, or authorization from the following organizations:

- **FCC - Designation No.: CN1450**
  Shenzhen Acote Technology Co., Ltd. has been certified by the FCC (Federal Communications Commission) as a testing laboratory. Test Firm Registration Number: **832670**.
- **A2LA - Accreditation Number: 7697.01**
  Shenzhen Acote Technology Co., Ltd. has been accredited by A2LA (American Association for Laboratory Accreditation) in compliance with the internationally recognized standard ISO/IEC 17025:2017, "General Requirements for the Competence of Testing and Calibration Laboratories."

1.3 Announcement

Shenzhen Acote Technology Co., Ltd. tested the equipment in accordance with the requirements set forth in the test standards. The test results show that the equipment tested is capable of demonstrating compliance with the requirements as documented in this report.

The results documented in this report apply only to the tested sample, under the conditions and modes of operation as described herein. It is the manufacturer's responsibility to assure that additional production units of this model are manufactured with identical electrical and mechanical components. All samples tested were in good operating condition throughout the entire test program. Measurement Uncertainties are published for informational purposes only and were not taken into account unless noted otherwise.

This document may not be altered or revised in any way unless done so by Shenzhen Acote Technology Co., Ltd. and all revisions are duly noted in the revisions section. Any alteration of this document not carried out by Shenzhen Acote Technology Co., Ltd. will constitute fraud and shall nullify the document.

1.4 Disclaimer

For the information or data provided by the client in this report, the relevant results or conclusions of this report are only made for these data or information. The testing laboratory is not responsible for the authenticity and accuracy of these data or information.

2 Equipment Under Test Information

2.1 Application Information

Applicant:	Shenzhen DOOGEE Hengtong Technology CO., LTD
Address of Applicant:	B, 2/F, Building A4, Silicon Valley Power Digital Industrial Park, No. 22, Dafu Industrial Zone, Guanlan Aobei Community, Guanlan Street, Longhua New District, Shenzhen, Guangdong China
Manufacturer:	Shenzhen DOOGEE Hengtong Technology CO., LTD
Address of Manufacturer:	B, 2/F, Building A4, Silicon Valley Power Digital Industrial Park, No. 22, Dafu Industrial Zone, Guanlan Aobei Community, Guanlan Street, Longhua New District, Shenzhen, Guangdong China
Factory:	Huizhou Shenke Xinfei Technology Co., Ltd
Address of Factory:	Building C, Xia Chang Jing industrial, XinXu Town, Huiyang District, Huizhou City

2.2 Product Information

Product Name:	Portable Wireless Speaker
Model No.:	MG01
Models of Product Family:	MG02, MS01, MS04, MS03, MS06, MS02, MS05, BP04, BP05, BP01, BP02, BP03, BP06, BP07, BP08, BP09, BP10, BP11, BP12, MS07, MS08, MS09, MS10, MG03, MG04, MG05, MG06, TH01, TH02, TH03, TH04
Description of Model Differentiation:	This product series includes a total of 32 models. All models share an identical RF design, including the same RF chipset, RF circuit design, PCB layout, antenna type, antenna location, and antenna gain. The differences among the models are limited to the appearance, mechanical structure design, and color.
Hardware Version:	SK_D66_V0.9
Software Version:	SKXF_D66_Fiero_20260303_1356_0xC2E6(1)

2.3 EUT Technical Parameters

Operation Frequency:	2402 MHz ~ 2480 MHz
Modulation Technology:	Other Modulation
Modulation Type:	GFSK
Date Speed:	☒1 Mbps (LE 1M PHY) ☐2 Mbps (LE 2M PHY) ☐125 kbps (LE Coded PHY, S=8) ☐500 kbps (LE Coded PHY, S=2)
Channel Numbers:	40
Antenna Type:	Internal Antenna
Antenna Gain:	2.5 dBi (declared by applicant)
Power Supply:	Rechargeable Li-ion Battery 3.7Vdc, 1800mAh
Input Voltage:	DC 5V
Test Sample Condition:	The test samples were provided in good working order with no visible defects.

3 Test Information

3.1 Test Methodology

The tests documented in this report were performed in accordance with:

- Article 2, Paragraph 1, Item 19 (WW)
- MIC Notification No.88 of 2004, Annex 43

3.2 Test Result Summary

Report Section	Test Items	Test Result
5.1	Frequency Tolerance	Pass
5.2	Occupied Bandwidth	Pass
5.3	Strength of Spurious Emission or Unwanted Emission	Pass
5.4	Antenna Power and Tolerance	Pass
5.5	Strength of Secondary Radiated Emission	Pass
5.6	Transmitting Antenna Absolute Gain	Pass
5.7	Main Lobe Width of Transmitting Antenna	N/A
5.8	Interference Suppression Function	Pass

Remark:

a) Pass: The EUT complies with the essential requirements in the standard.

b) N/A: Not applicable.

c) The test cable insertion loss used by "RF Output Power" and other conduction measurement items is provided by the customer.

3.3 Environment of test site

Temperature:	Normal: 20°C ~ 25°C
Humidity:	Normal: 20% ~ 75% RH
Atmospheric Pressure:	990 ~ 1010 mbar
Test Voltage:	Nominal: 3.70Vdc Extreme: 3.33Vdc for low voltage, 4.07Vdc for high voltage

Note: When the external power input voltage of the EUT fluctuates by ±10%, the work voltage of the radio part circuit of the EUT fluctuates within ±1%, so it is measured only at the rated voltage. The detailed test points are as follows:

External power supply	IC power supply	Deviation from normal	Deviation
3.70V	3.30V	---	---
3.33V	3.29V	-0.001V	0.00%
4.07V	3.32 V	0.001V	0.00%

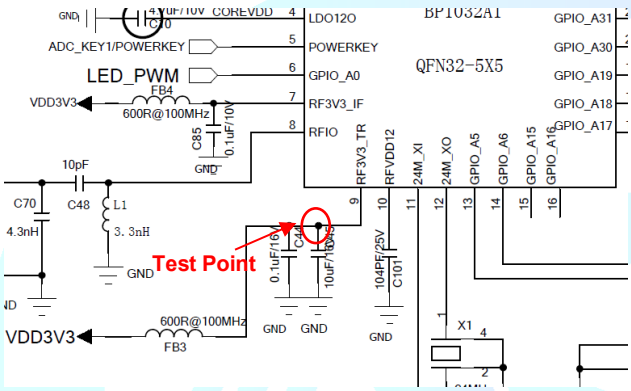

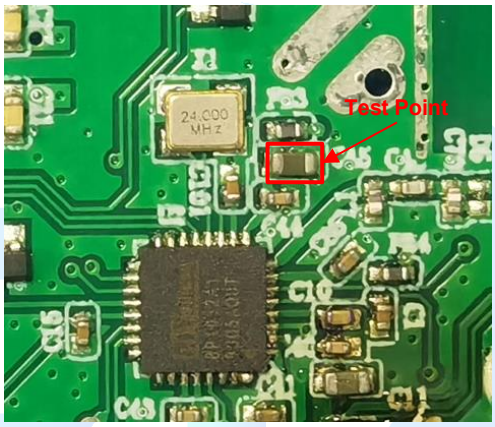

3.4 Measurement Uncertainty

Parameter	**Expanded Uncertainty (Confidence of 95%(U = 2Uc(y)))**
Radio Frequency	±2 x 10^{-8}
RF Power, Conducted	±0.66 dB
Spurious emission, Conducted	±2.28 dB
Bandwidth, Conducted	±4%
Temperature	±0.3 °C
Voltage	±0.1 %
Humidity	±2 %
Note: *All the measurement uncertainty value were shown with a coverage k=2 to indicate 95% level of confidence. The measurement data show herein meets or exceeds the CISPR measurement uncertainty values specified in CISPR 16-4-2 and can be compared directly to specified limit to determine compliance.*	

3.5 Description of Support Units

The EUT was test as an independent unit.

3.6 Additions to, Deviations, or Exclusions from the Method

None

3.7 Test Instruments List

Test Equipment	Manufacturer	Model	Serial No.	Cal Due	Cal. By	Note
Spectrum Analyzer	Keysight	N9020A	MY56060179	2026/11/13	LiSai	3
Vector Signal Generator	Agilent	N5182A	MY49060467	2026/11/13	LiSai	3
Automatic control unit (including power sensor)	MWRFTest	MW100-RFCB	MW250722AKT-59	2026/11/13	LiSai	3
DC Power Supply	Agilent	E3632A	MY40026044	2026/11/13	LiSai	3
Digital Multimeter	FLUKE	15B+	34071982WS	2026/11/19	LiSai	3
BT/WiFi automated testing software	MWRFTest	MTS8310	Version: 2.0.0.0	N/A		

Note:

1) *Calibration conducted by the National Institute of Information and Communications Technology (NICT) in japan (hereinafter referred to as *NICT*) or a designated calibration agency under Article 102-18 paragraph (1) in JRL.*
2) *Correction conducted pursuant to the provisions of Article 135 or Article 144 of the Measurement Act (Act No.51 of 1992)*
3) *Calibration conducted in countries except Japan, which shall be equivalent to the calibration conducted by the NICT or a designated calibration agency under Article 102-18 paragraph (1).*
4) *Calibration, etc. conducted by using measuring instruments and other equipment listed in the right column of appended table No. 3, which shall have been given any type of calibration, etc. listed above from (2) to (4).*

4 Test Configuration of EUT

4.1 Channels Selected to Perform the Tests

Channels	Channel No.	Frequency (MHz)
Lowest	0	2402
Middle	19	2440
Highest	39	2480

4.2 Test mode

TM 1:	Keep the EUT in continuously transmitting mode
TM 2:	Keep the EUT in continuously receiving mode
TM 3:	Keep the EUT in normal working mode

4.3 Test Configuration for Each Items

Report Section	Test Channel	Test Mode	Modulation Type	Test Conditions
5.1	L, M, H	TM 1	Modulation	N.T.
5.2	L, M, H	TM 1	Modulation	N.T.
5.3	L, M, H	TM 1	Modulation	N.T.
5.4	L, M, H	TM 1	Modulation	N.T.
5.5	L, M, H	TM 2	Modulation	N.T.
5.6	M	TM 1	Modulation	N.T.
5.8	/	TM 3	Modulation	N.T.

Remark:
N.T.: Normal Temperature.

4.4 Test Setup Block

Setup 1:

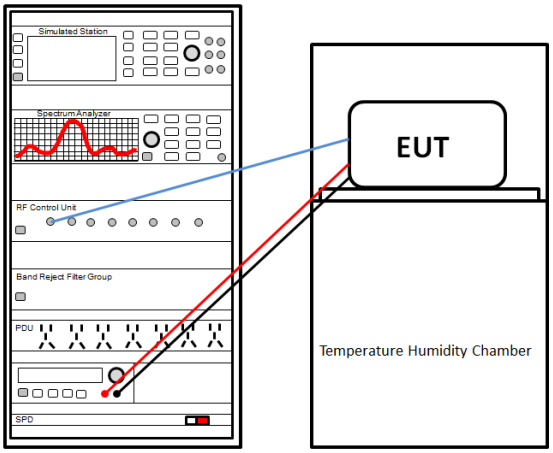

Setup 2:

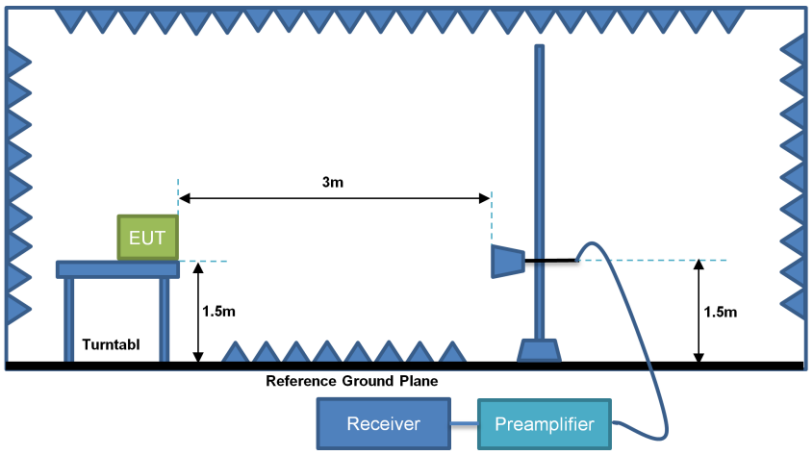

Setup 3:

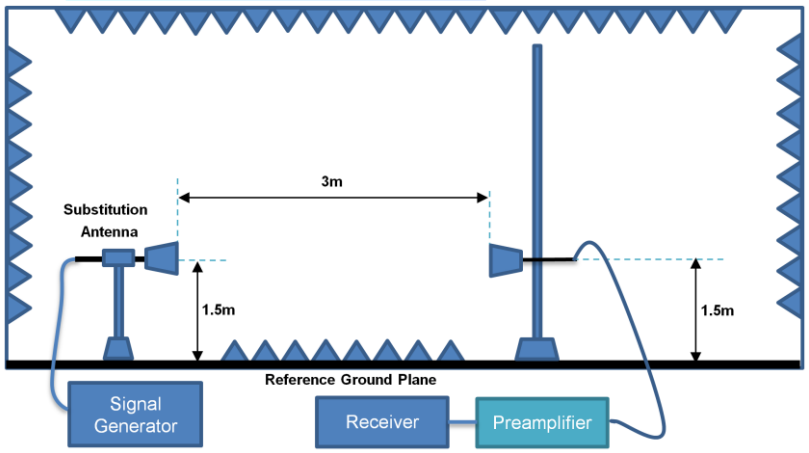

Setup 4:

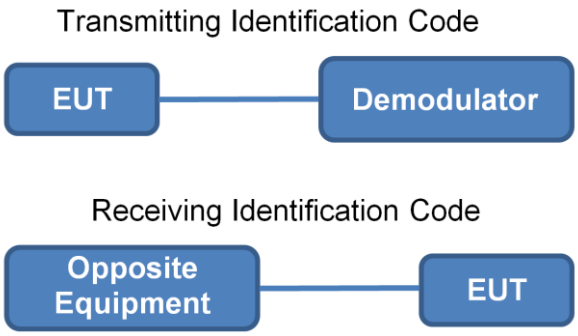

5 Technical requirements specification

5.1 Frequency Tolerance

5.1.1 Test Method

MIC Notification No.88 of 2004, Annex 43 section 3.

5.1.2 Limit

≤ ± 50 ppm

5.1.3 Test Procedure

a) The EUT antenna port is connected to the RF port of the test system control unit via an RF cable.
b) The EUT is set to operate in TM 1 mode as described in Section 4.2. The EUT test channel and modulation type settings are described in Section 4.3.
c) Open the MTS8310 test software, load the MIC BLE test script, and select the test items and other relevant test parameters.
d) The test script was executed, the measurement was performed.
e) Save the test data.

5.1.4 Test Setup

See setup 1 in section 4.4.

5.1.5 Test Instruments

Refer to section 3.7.

5.1.6 Test Results

Pass.

5.1.7 Test Data

For detailed test data, see Appendix – BLE of the original report (No. ACT-RF-260300302) issued by Shenzhen Acote Technology Co., Ltd.

5.2 Occupied Bandwidth

5.2.1 Test Method

MIC Notification No.88 of 2004, Annex 43 section 4.

5.2.2 Limit

Occupied bandwidth: ≤ 26 MHz

5.2.3 Test Procedure

a) The EUT antenna port is connected to the RF port of the test system control unit via an RF cable.
b) The EUT is set to operate in TM 1 mode as described in Section 4.2. The EUT test channel and modulation type settings are described in Section 4.3.
c) Open the MTS8310 test software, load the MIC BLE test script, and select the test items and other relevant test parameters.
d) The test script was executed, the measurement was performed.
e) Save the test data.

5.2.4 Test Setup

See setup 1 in section 4.4.

5.2.5 Test Instruments

Refer to section 3.7.

5.2.6 Test Results

Pass.

5.2.7 Test Data

For detailed test data, see Appendix – BLE of the original report (No. ACT-RF-260300302) issued by Shenzhen Acote Technology Co., Ltd.

5.3 Strength of Spurious Emission or Unwanted Emission

5.3.1 Test Method

MIC Notification No.88 of 2004, Annex 43 section 5.

5.3.2 Limit

30MHz ~ 1000MHz: 2.5μW/MHz (-26dBm/MHz)
1000MHz ~ 2387MHz: 2.5μW/MHz (-26dBm/MHz)
2387MHz ~ 2400MHz: 25μW/MHz (-16dBm/MHz)
2483.5 MHz ~ 2496.5MHz: 25μW/MHz (-16dBm/MHz)
2496.5MHz ~ 12.75GHz: 2.5μW/MHz (-26dBm/MHz)

5.3.3 Test Procedure

a) The EUT antenna port is connected to the RF port of the test system control unit via an RF cable.
b) The EUT is set to operate in TM 1 mode as described in Section 4.2. The EUT test channel and modulation type settings are described in Section 4.3.
c) Open the MTS8310 test software, load the MIC BLE test script, and select the test items and other relevant test parameters.
d) The test script was executed, the measurement was performed.
e) Save the test data.

5.3.4 Test Setup

See setup 1 in section 4.4.

5.3.5 Test Instruments

Refer to section 3.7.

5.3.6 Test Results

Pass.

5.3.7 Test Data

For detailed test data, see Appendix – BLE of the original report (No. ACT-RF-260300302) issued by Shenzhen Acote Technology Co., Ltd.

5.4 Antenna Power and Tolerance

5.4.1 Test Method

MIC Notification No.88 of 2004, Annex 43 section 6.

5.4.2 Limit

Antenna Power: ≤ 10mW

Tolerance: ≤ + 20%

5.4.3 Test Procedure

a) The EUT antenna port is connected to the RF port of the test system control unit via an RF cable.
b) The EUT is set to operate in TM 1 mode as described in Section 4.2. The EUT test channel and modulation type settings are described in Section 4.3.
c) Open the MTS8310 test software, load the MIC BLE test script, and select the test items and other relevant test parameters.
d) The test script was executed, the measurement was performed.
e) Save the test data.

5.4.4 Test Setup

See setup 1 in section 4.4.

5.4.5 Test Instruments

Refer to section 3.7.

5.4.6 Test Results

Pass.

5.4.7 Test Data

For detailed test data, see Appendix – BLE of the original report (No. ACT-RF-260300302) issued by Shenzhen Acote Technology Co., Ltd.

5.5 Strength of Secondary Radiated Emission

5.5.1 Test Method

MIC Notification No.88 of 2004, Annex 43 section 7.

5.5.2 Limit

30MHz ~ 1000MHz: 4nW/100kHz (-54dBm/100kHz)
1000MHz ~ 12.75GHz: 20nW/MHz (-47dBm/MHz)

5.5.3 Test Procedure

a) The EUT antenna port is connected to the RF port of the test system control unit via an RF cable.
b) The EUT is set to operate in TM 2 mode as described in Section 4.2. The EUT test channel and modulation type settings are described in Section 4.3.
c) Open the MTS8310 test software, load the MIC BLE test script, and select the test items and other relevant test parameters.
d) The test script was executed, the measurement was performed.
e) Save the test data.

5.5.4 Test Setup

See setup 1 in section 4.4.

5.5.5 Test Instruments

Refer to section 3.7.

5.5.6 Test Results

Pass.

5.5.7 Test Data

For detailed test data, see Appendix – BLE of the original report (No. ACT-RF-260300302) issued by Shenzhen Acote Technology Co., Ltd.

5.6 Transmitting Antenna Absolute Gain

5.6.1 Test Method

MIC Notification No.88 of 2004, Annex 43 section 12.

5.6.2 Limit

EIRP: ≤ 12.14dBm

5.6.3 Test Procedure

a) The EUT is configured to the modulation mode, and transmitting at maximum power..
b) Set EUT and measuring antenna at the same height and roughly facing each other.
c) Move the measuring antenna height up and down within ± 50cm of EUT height and swing it to find the maximum output of the measuring antenna. The output level at the spectrum analyzer is read “E“.
d) Remove the EUT from the turn table and put the replacing antenna facing to measuring antenna at same height. Set the standard signal generator (SSG) at same frequency and transmit on then receive the signal.
e) Swing the replacing antenna give a maximum receiving level.
f) Move the measuring antenna height up and down within ± 50cm of replacing antenna height and swing it to find the maximum receiving level.
g) Set SSG output power at Pt to give the equivalent output level of “E” or calculate Pt with SSG output which gives the nearest of “E” and difference (± 1dB). Record the Pt.
h) Calculate EIRP by the formula below EIRP = Gt – L + Pt.
   - Gt: gain of replacing antenna (dBi).
   - L: feeder loss between SSG and replacing antenna.
   - Pt: Output power of the SSG.
i) If the antenna for the EUT has circular polarization, sum of V-field and H-field will be result if measuring antenna is linear polarization.

5.6.4 Test Setup

See setup 2 and setup 3 in section 4.4.

5.6.5 Test Instruments

Refer to section 3.7.

5.6.6 Test Results

Pass.

The maximum E.I.R.P. of EUT is less than 12.14 dBm, so it’s unnecessary testing.

5.6.7 Test Data

For detailed Maximum E.I.R.P. test data, see Appendix – BLE of the original report (No. ACT-RF-260300302) issued by Shenzhen Acote Technology Co., Ltd.

5.7 Main Lobe Width of Transmitting Antenna

5.7.1 Test Method

MIC Notification No.88 of 2004, Annex 43 section 13.

5.7.2 Limit

The receiving power at the side lobes except the main lobe (Θ0) is 3dBlower or more than the maximum receiving power.

5.7.3 Test Procedure

a) Configure EUT at maximum power transmission with modulation.

b) Put the radio equipment and the test antenna approximately to face each other.

c) The spectrum analyzer settings are as follows:

- Test Frequency: The centre frequency of the channel under test.
- RBW = 1MHz
- VBW = 1kHz
- Span = 0
- Detector=Peak

d) Adjust the radio equipment rotating horizontally and vertically so as to coincide to the maximum power direction.

e) Changing the height of the test antenna between +50cm against the height of the radio equipment and adjusting its direction too, look out a maximum point of the receiving power. The indication of the spectrum analyzer at this point is referred as “E”.

f) Using the equivalent isotropic radiation power (PE) which was already measured, calculate the allowable main lobe width (Θ0) concerning horizontal and vertical planes. Allowable main lobe width (Θ0) =360/A here, Θ0 : Allowable main lobe width of the transmitting antenna of the radio equipment (half-width) (º) PE : Equivalent isotropic radiation power of the radio equipment (dBm) A : This is calculated as the equivalent isotropic radiation power divided by absolute gain 2.14dBi of transmitting antenna being fed by average antenna power 10mW (10mW/MHz for the orthogonal frequency division multiplexing system, the direct diffusion system, the frequency hopping system, the compound system of direct diffusion and frequency hopping, and the compound system of orthogonal frequency division multiplexing and frequency hopping.

g) Rotating the radio equipment horizontally a round as possible, confirm that the receiving power at the side lobes except main lobe width (Θ0) is lower than 3dB or more of the maximum receiving power “E”.

h) Once put the radio equipment back to the state (3). Inclining the radio equipment vertically as far as possible (more than 90 degree; it may be possible to measure referring “6. Other conditions”), confirm that the receiving power at the side lobes except main lobe width (Θ0) is lower than 3dB or more of the maximum receiving power “E”.

5.7.4 Test Setup

See setup 2 in section 4.4.

5.7.5 Test Instruments

Refer to section 3.7.

5.7.6 Test Results

Pass.

The maximum E.I.R.P. of EUT is less than 12.14 dBm, so it’s unnecessary testing.

5.7.7 Test Data

For detailed Maximum E.I.R.P. test data, see Appendix – BLE of the original report (No. ACT-RF-260300302) issued by Shenzhen Acote Technology Co., Ltd.

5.8 Interference Suppression Function

5.8.1 Test Method

MIC Notification No.88 of 2004, Annex 43 section 14.

5.8.2 Requirement

a) The demodulator shall be able to demodulate the transmitting signal from the radio equipment and to display contents of the identification code.

b) The opposite equipment shall be able to transmit the identification code as same as the transmitting signal from the radio equipment.

5.8.3 Test Procedure

1) The radio equipment with automatic transmitting function of identification code:
   a) Transmit the assigned identification code from the radio equipment.
   b) Confirm the identification code received by the demodulator.
2) The radio equipment with automatic receiving function of identification code:
   a) Transmit the assigned identification code from the opposite equipment.
   b) Confirm that the usual communication is available.
   c) Transmit the identification code distinct from the assigned one from the opposite equipment.
   d) Confirm that the radio equipment is stopped or an indication is displayed as the identification code is different.

5.8.4 Test Setup

See setup 4 in section 4.4.

5.8.5 Test Instruments

Refer to section 3.7.

5.8.6 Test Results

Pass.

5.8.7 Test Data

For detailed test data, see the original report (No. ACT-RF-260300302) issued by Shenzhen Acote Technology Co., Ltd.

6 Test Setup Photos

Refer to the Bluetooth and BLE Test Setup Photos in the original report (Project No. ACT-RF-2603003) issued by Shenzhen Acote Technology Co., Ltd.

7 EUT Constructional Details

Refer to the EUT External Photos and EUT Internal Photos in the original report (Project No. ACT-RF-2603003) issued by Shenzhen Acote Technology Co., Ltd.

------ End of report ------