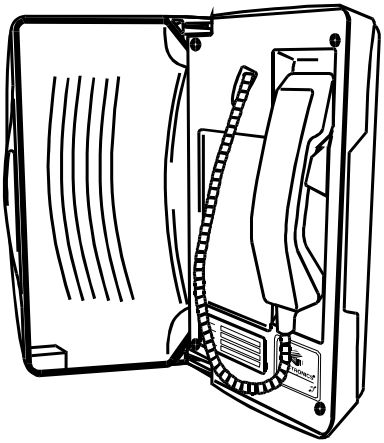

Installation and User Guide

Titan GSM Telephone

GAI-TRONICS

.

Doc. No. 502-20-0151-011 / GAI-ENG-619 Iss 1, Sep 2020 (CN 42895-003)

CONTENTS

1. Safety and Care Information 4
2. Product Description 5
3. Operation / Testing 7
   - 3.1. Making Calls 7
   - 3.2. Receiving calls 7
   - 3.3. Last Number Redial 7
   - 3.4. Secrecy (Mute) 7
4. Installation 7
   - 4.1. Prior to Installation 7
   - 4.2. Important Notes for Installers and Maintainers 8
   - 4.3. Installation overview 9
   - 4.4. Mounting methods and dimensions 9
   - 4.5. Internal connections 14
   - 4.6. Removing the Rear Cover 14
   - 4.7. Installing the SIM 15
   - 4.8. Fitting the rear cover 16
   - 4.9. Battery connections 18
   - 4.10. Connecting the telephone 18
   - 4.11. LED indications and operating states 20
   - 4.12. Switch on and test 21
   - 4.13. Switching the phone off (power down) 22
   - 4.14. Operating states of the phone 22
5. Programming, configuration and diagnostics 23
   - 5.1. Sending Commands by SMS 23
   - 5.2. Sending Commands via USB port 23
   - 5.3. List of Commands (for use with either SMS or USB) 24
6. Troubleshooting 38

6.1. Phone not responding to 1234stat0 request via SMS: 38
6.2. ERROR light is permanently ON 39
6.3. ERROR light flashing Long/Fast 39
6.4. FUNCTION and ERROR lights flashing Long/Fast 39
6.5. FUNCTION and ERROR lights flashing Short/Slow 39
7. Maintenance 40
7.1. Diagnostic check 40
7.2. Batteries 40
7.3. Overdischarged batteries 41
7.4. DC Power Adapter 41
7.5. Cleaning 41
7.6. TMA 42
8. Aftercare 42
9. Technical Specifications 43
10. Recycling information 46
11. CE Declaration 46

1. Safety and Care Information

Please read these instructions thoroughly before starting installation. These products must be installed by competent personnel familiar with electrical and telephone installation.

The spring-loaded door (where fitted) can close sharply. Take care not to trap fingers etc., during installation and use.

IMPORTANT! This phone, like any wireless phone, operates using radio signals and the wireless network, which cannot guarantee connection in all conditions. Therefore, you should never rely solely upon any wireless phone for essential communications (e.g. medical emergencies).

Remember, to make or receive any calls, the phone must be switched on, appropriately configured and in an area with adequate cellular signal strength. Emergency calls may not be possible on all wireless phone networks or when certain network services or phone features are in use. Check with local cellular service providers. Emergency calls may be made even when a SIM card is not installed (subject to network availability) using the 112 dialling code.

Operating environment

Make sure that no special regulation is in force that imposes restrictions on the use of mobile phones. Restrictions to mobile phones would also apply to this telephone. Most modern electronic equipment is shielded from radio frequency (RF) signals. However, certain electronic equipment may not be shielded against the RF signals from your phone.

Pacemakers

Pacemaker manufacturers recommend that a minimum separation of 20 cm (8 inches) be maintained between a handheld wireless phone and a pacemaker. The same restriction should apply to the external antenna of this phone, where fitted. If you have any reason to suspect that interference is taking place, switch off the phone immediately.

Hearing aids

The phone’s radio signals may interfere with some hearing aids. In such cases move the antenna as far away as practical or consult your hearing aid supplier.

Other medical devices

Operation of any radio transmitting equipment, including the phone, may interfere with the function of inadequately protected medical devices. Consult a physician or the manufacturer of the medical device to determine if they are adequately shielded from external RF energy or if you have any questions. Switch off your phone in health care facilities when any regulations posted in these areas instruct you to do so. Hospitals or health care facilities may be using equipment that could be sensitive to external RF energy.

Radio transmission equipment

While GAI-Tronics GSM products are designed to conform to international standards regarding the acceptance of radio frequency interference, certain installation locations may interfere with their proper operation. We recommend that GAI-Tronics GSM equipment is not installed in close proximity to any equipment that generates RF signals (for example, radio transmitters), and is located as far as possible away from it or in a separate room**.**

Potentially explosive atmospheres

Do not install the phone or site the antenna in any area with a potentially explosive atmosphere and obey all signs and instructions. Areas with a potentially explosive atmosphere are often but not always clearly marked. They include chemical transfer or storage facilities; vehicles using liquefied petroleum gas (such as propane or butane): areas where the air contains chemicals or particles, such as grain, dust or metal powders.

2. Product Description

This manual describes GSM (cellular) versions of the Titan telephone range. Titan is a family of rugged, weather-resistant metal-bodied telephones available with a range of handset types, keypad configurations, colours and enclosures, based around a common faceplate style.

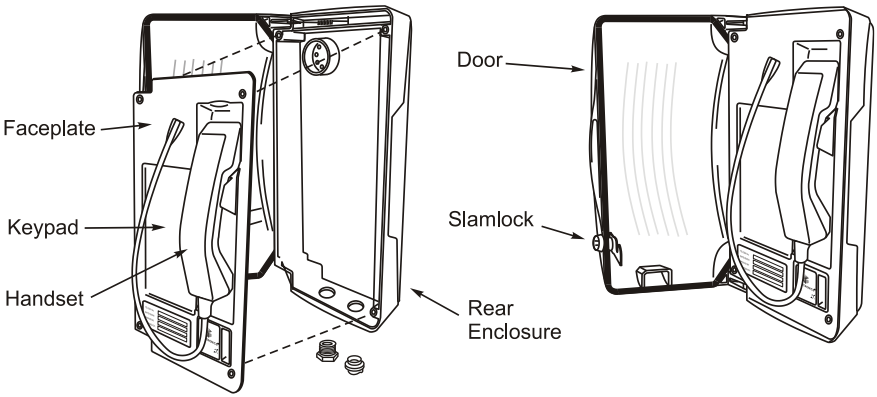

Most Titans are equipped with a heavy-duty spring-loaded door, but models are available with a soft-close door, without door and also as faceplate only, for flush mounting.

Titan doors may be fitted with slamlocks opened by an 8mm square socket key. Other mechanisms may be fitted.

Models are available with full numeric keypads for manual dialling, with auto-dial buttons for dialling pre-stored numbers from a single button press, or without any buttons (dial on handset lift). Common keypad layouts are shown below.

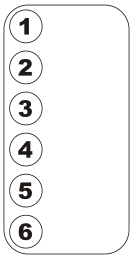

Auto-dial only (6 memory buttons shown)

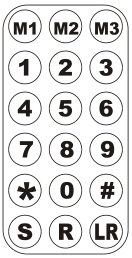

Full numeric with 3 auto-dial memories (18 button)

Titan GSM telephones offer the following key features:

- Vandal resistant handset and cord
- Inductive coupler fitted as standard for hard of hearing
- Robust and weather resistant: IP65
- Range of keypad options
- Large, easy to see tactile buttons
- Programmable auto-dialler functions for dialling pre-stored numbers
- Penta band WCDMA (3G), quad band GSM (2G) communication, takes standard (2FF) 2G/3G SIM card (not supplied)
- Range of power supply options including solar
- High capacity internal battery giving typically 6 hours talk time, 330 hours standby
- Remote programming and diagnostics via SMS
- Automatic acoustic path handset testing
- Wall or pole mounting
- Simple installation

For the full list of product features, please see the specifications in section 9 and configuration options in section 5.

3. Operation / Testing

Please note that, following power connection, there will be a delay while the telephone acquires the network before it can make or receive calls.

3.1. Making Calls

To make a call, lift the handset, wait for dial tone, dial required digits (or press required memory button or Last Number Redial where provided) and wait for connection.

When using a memory button, a brief bust of tones is heard to signify that the call has been placed to the pre-programmed number.

If the telephone is set to dial on handset lift, no dial tone is heard prior to the burst of confidence tones.

To end a call, replace the handset in its cradle.

3.2. Receiving calls

To receive a call, lift the handset when ringing is heard.

Note: It is possible to configure the phone to inhibit incoming calls. If so configured, the sounder will not sound, but the phone can still receive SMS commands, acknowledge commands via SMS and communicate via USB.

3.3. Last Number Redial

(18 button versions only)

Lift the handset, press LR to redial the last dialled number.

3.4. Secrecy (Mute)

(18 button versions only)

During a call, press and hold the S button to mute the microphone.

4. Installation

4.1. Prior to Installation

Please ensure the following steps are taken prior to installation:

- **Survey the site** to ensure there is adequate GSM signal coverage on the selected network.
- **SIM card**: Obtain a suitable, unlocked SIM card for the network concerned – **IMPORTANT:** Ensure that the SIM is activated and not locked. If the SIM is locked there may not be a way of unlocking it

from the Titan and the telephone will not function. It is also recommended to disable voicemail on the SIM.

- **Power source**. Ensure the chosen power source (for example solar panel, 230V mains outlet, etc.) is available.
- **Antenna location**. Titan GSM is a metal-bodied telephone and therefore the antenna needs to be mounted externally to the telephone. Please ensure that there is a suitable mounting location for the antenna and that suitable protection for the cable is provided, for example conduit or trunking, from the antenna to the telephone. A range of suitable antennae is available – contact GAI-Tronics for details.

4.2. Important Notes for Installers and Maintainers

- **Qualified personnel only**
  Titan GSM telephones can use several different power supply options, some of which may require connection of the power supply to an AC mains outlet. **Installation and maintenance must only be carried out by appropriately qualified and trained personnel.** Contact GAI-Tronics if installation service is required.

- **DC power adapter**
  If a mains to DC power adapter is used, it must be an approved type supplied by GAI-Tronics, and must be installed according to the instructions provided with it. In particular it must be installed with a 2-pole disconnect device compliant with EN 62368-1 Annex L.

  Contact GAI-Tronics for details of available power supply units.

- **Test tools required**
  During the testing and commissioning of the Titan GSM telephone, the use of another mobile phone will be required in order to send status and configuration commands via SMS text messages. Alternatively, a laptop computer can be used connected to the internal USB port, see section 5.2.

- **Avoid contamination during installation**
  All possible measures must be taken to ensure water, fluid or dust does not contaminate the internal components of the telephone whilst unpacking, preparing and installing the telephone in inclement weather conditions or by negligence. Failure to do so may invalidate your warranty. Please retain any screws removed during installation or maintenance - make sure the correct screws are refitted to ensure the integrity of any seals.

- **Emergency Services warning**
  If the telephone is configured so that it cannot make a direct call to the emergency services, check with your telephone service provider

or infrastructure maintainer whether it is necessary to warn users, and if so provide a suitable warning notice. A warning label, which can be fixed to the front of the telephone, is provided.

4.3. Installation overview

As standard, a Titan telephone with rear enclosure is supplied with 2 M20 cable glands with sealing washers, 4 countersunk screws with wall plugs and a 3mm Hex key.

Flush mounting variants have no rear enclosure – see section 4.4.3 below.

1. The internal rear cover, which incorporates the batteries, is packed separately (usually under the door) and must be fitted after the SIM card prior to reassembling the telephone.

   Caution – take care to support the spring-loaded door whilst open to prevent it slamming shut and trapping fingers.

2. To prepare for installation, open the door (where fitted), carefully set aside the rear cover & batteries, then undo the four retaining screws to remove the faceplate from the rear enclosure. A 3mm Hex key is required.
3. The SIM holder, batteries and all connections are on the rear of the faceplate, allowing the rear enclosure to be mounted first.
4. The Titan telephone is intended for vertical installation to a wall or pole. Select the required mounting method (section 4.4) and mount the rear enclosure first where applicable.
5. Route the required cables through glands as appropriate, install the SIM card, fit the rear cover (complete with batteries) and make connections following sections 4.7 and 4.5. Ensure that both cable entries are sealed with either a gland or a black blanking plug as described.
6. Re-fit the faceplate ensuring a weatherproof seal
7. Programming or parameter changes can be made remotely, using SMS (see section 5)
8. Test the operation of the telephone (section 3). Installation is now complete.

4.4. Mounting methods and dimensions

Before mounting the telephone, check the cable routing and requirements. If glands are required, fit them to the case as follows:

1. Usually both glands are used – one for the antenna cable and the other for power. If only one gland is to be used, remove the RED blanking plug leaving the other (usually BLACK) in place.

2. Note that 2 plastic glands are supplied, but it is the installer's responsibility to select the correct type of gland for the application and cables used. The gland entries (and the supplied glands) are M20.

3. Select the appropriate sized gland:
   Use the smaller gland for cables diameters 4 - 7mm.
   Use the larger gland for cable diameters 8 - 13mm.

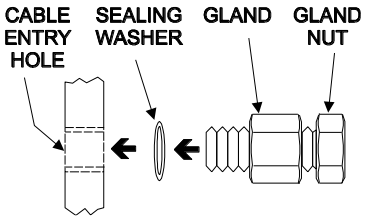

4. From the outside of the case, insert the selected gland into the threaded cable entry hole and tighten, so that its sealing washer is compressed against the enclosure surface.

5. Proceed with chosen mounting method below

4.4.1 Wall mounting

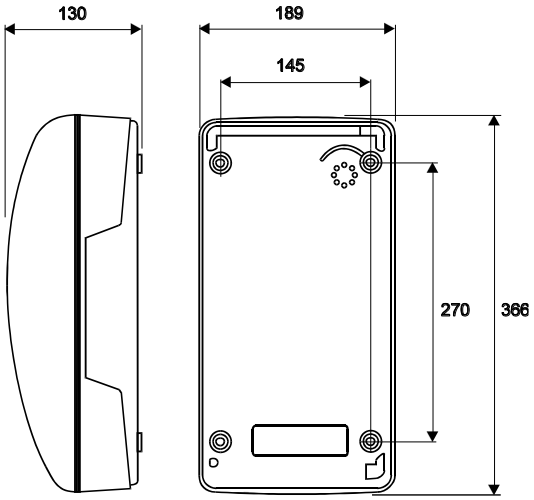

1. Using a suitable tool, punch out 4 holes in the rear enclosure, taking care not to damage or dislodge the plastic bushes. Only four of the eight holes are required - the outer ones are recommended. The inner holes are provided to be compatible with older-style mounting posts, and should be left intact if not used. If the inner holes are used they must be fitted with the supplied plastic bushes.

WARNING:.*Your warranty will be invalidated if :-*

1. Any fixing hole made in the rear enclosure is left unused.
2. Any additional holes are drilled into the telephone enclosure.
3. Plastic bushes are not used on all fixing holes.

---

2. Mark the wall with hole centres based on the dimensions shown (145 x 270mm). If necessary offer the rear enclosure up to the wall to check alignment. Do not use the enclosure as a template for drilling.
3. Drill holes in the wall on the marked positions. Select appropriate screws, wall plugs etc., for the type of wall, bearing in mind that the weight of the complete phone is around 5kg.

IMPORTANT: **USE ONLY** *countersunk-headed fixing screws. Check that screws seat properly in the plastic bushes to ensure a watertight seal. Do not use excessive tightening force, as this may crack the case.*

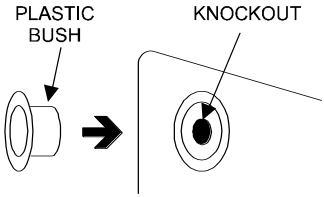

4. Ensure that all four plastic flanged bushes are in place and the rear enclosure is screwed tightly to the surface to prevent any water ingress through the punched holes.
5. Complete the installation by fitting the SIM, making the appropriate connections (sections 4.7 & 4.5) and re-fitting the face plate.

4.4.2 Pole mounting

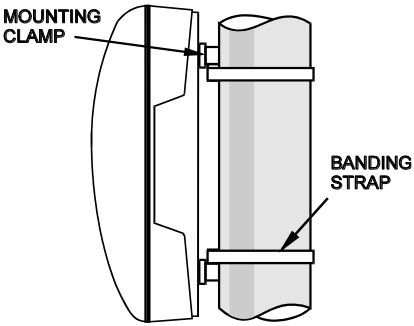

Kit No 100-02-0208-001

This accessory is for mounting GAI-Tronics telephones on to the side of round poles of 100mm to 200mm diameter, or on to square or rectangular section uprights of 100mm to 150mm across the mounting surface.

NOTE:

Banding straps (large scale worm-drive clamps) are not included in this kit and must be obtained separately. For details of where banding can be obtained, refer to GAI-Tronics.

1. Using a suitable tool, punch out the 4 **outer** holes in the rear enclosure, taking care not to damage or dislodge the plastic bushes.
2. Attach the pole mounting clamp assemblies to the rear enclosure using the M6 x 25 screws provided, pushing the screws through from inside the phone.
3. Tighten nuts to a torque of 4.5Nm max.
   IMPORTANT: avoid the use of power tools. Spinning the nuts too quickly can cause a rapid increase in heat which can cause the nuts to seize as a result of galling or cold-welding.
   Note: only use the outer four holes, and ensure that the screws seat properly in the plastic bushes to avoid water ingress.
4. Ensuring that the glands are at the bottom, pass a proprietary banding strap round each of the pole mounting clamps and the support pole. Tighten securely.
5. Continue the installation by fitting the SIM, making the appropriate connections (sections 4.7 & 4.5) and re-fitting the face plate.
6. Re-tighten the straps firmly and trim off any excess band material. For security the driving head of the band may also be sawn off.

4.4.3 Flush mounting

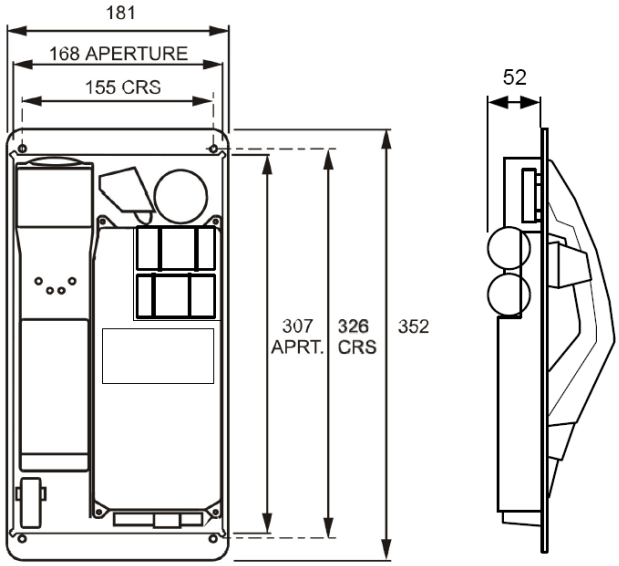

Titan telephones supplied for flush mounting have a slightly different faceplate to those supplied with a rear enclosure – in particular the fixing holes are in different positions and there are no corner cut-outs (for door hinges). These models are usually described as “Titan fp” and the supplied mounting kit contains round-headed screws and no glands.

Note that it is the installer’s responsibility to prevent moisture coming into contact with the electronics and connections on the back of the faceplate.

To flush-mount the telephone to a wall:

1. Prepare a recess (at least 55mm deep) in the wall according to the dimensions shown.
2. Mark the wall with hole centres based on the dimensions shown (155 x 326mm). If necessary offer the faceplate up to the wall to check alignment. Do not use the telephone as a template for drilling.
3. Drill holes in the wall at the marked positions. Select appropriate screws, wall plugs etc., for the type of wall, bearing in mind that the weight of the complete phone is around 1.5kg.
4. Route the cables to within the recess, fit the SIM and make connections to the telephone as shown in sections 4.7 & 4.5.

5. Secure the telephone to the wall taking care not to trap any wires. Note that the gasket on the rear of the faceplate is intended to make a weather seal when compressed against a smooth surface. Do not rely on this gasket to keep water out if mounting directly to rough surfaces such as brickwork – in these cases use additional sealant around the edges to ensure a weatherproof seal.

4.5. Internal connections

With the exception of the battery cable, the internal connections do not need to be disconnected or disturbed during installation, but for reference they are shown below:

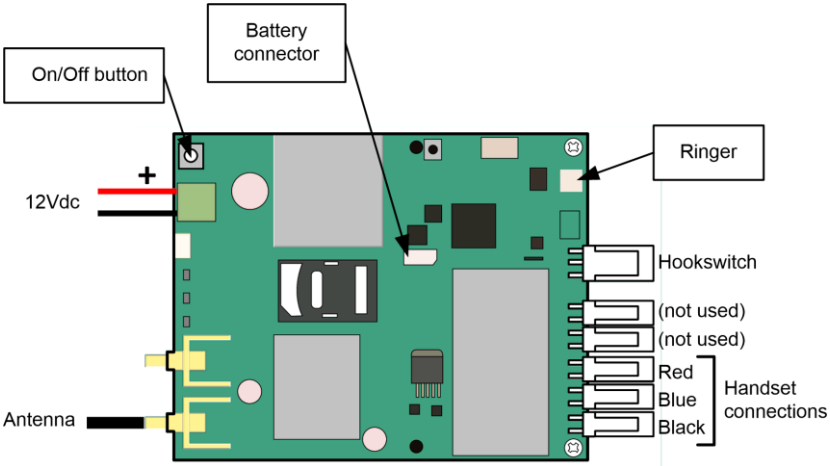

4.6. Removing the Rear Cover

If the rear cover needs to be removed (for example to change the SIM card or access the USB connector), it should be done as follows:

The SIM card holder is on the main PCB, visible through the transparent rear cover below the batteries. The USB connector is adjacent to the Status LEDs.

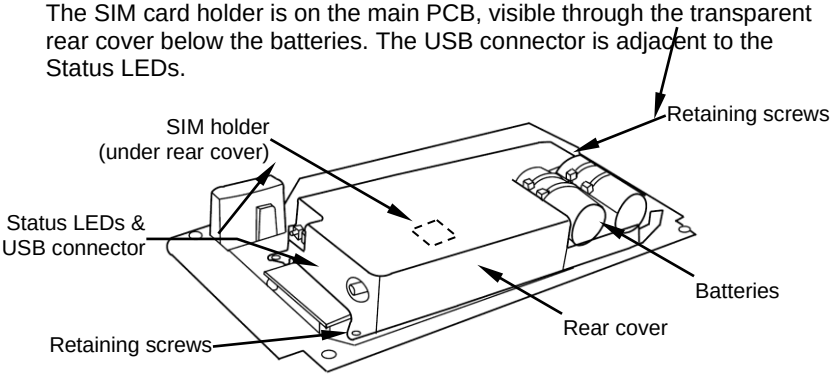

To remove the rear cover, remove the 4 retaining screws and carefully lift it away from the PCB. Take care not to pull or strain the battery cable which connects between the rear cover and the PCB.

Refit the cover following the instructions in section 4.8.

4.7. Installing the SIM

IMPORTANT: before installing or changing a SIM card, always make sure that the telephone is powered down by ensuring that both the DC power source cable and the battery cable are disconnected from the main PCB.

If the plastic rear cover has been fitted it should first be removed as described in section 4.5 above.

Carefully insert a SIM card into the holder:

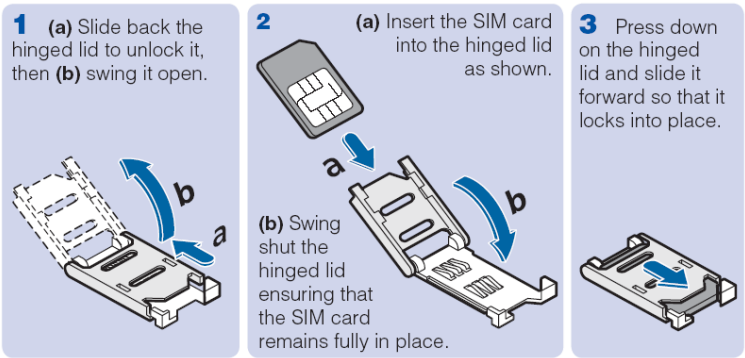

4.8. Fitting the rear cover

Once the SIM card has been installed, connect the battery cable and fit the rear cover as shown below:

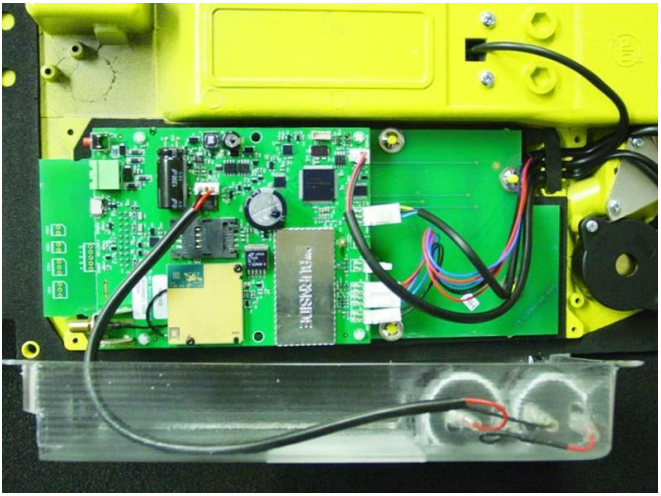

Connect the battery cable

Replace the rear cover taking care not to trap any cables under the side edges, and ensuring that the cables for handset, hookswitch and ringer sit properly in their channels as shown.

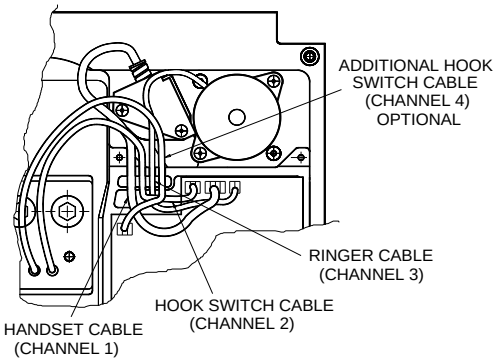

Secure the rear cover using the 4 M3 x 8 retaining screws provided

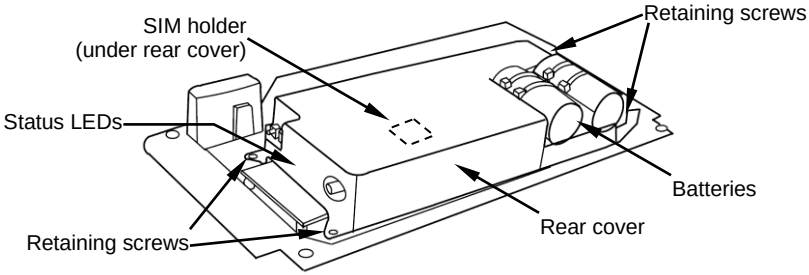
SIM holder
(under rear cover)
Retaining screws
Status LEDs
Batteries
Rear cover
Retaining screws

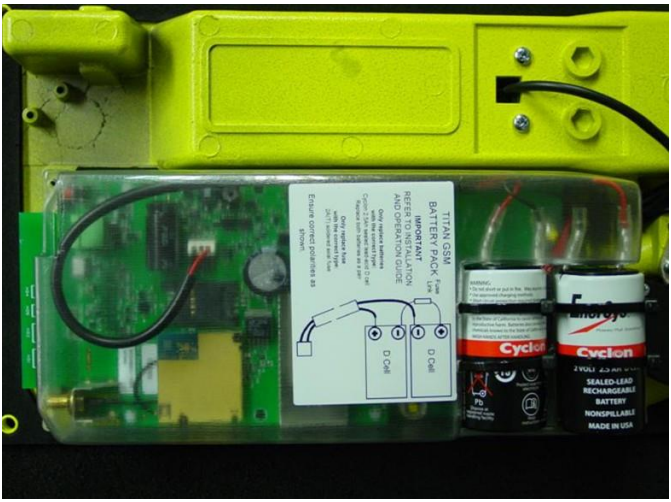
TITAN GSM
BATTERY PACK
IMPORTANT
REFER TO INSTALLATION
AND OPERATION GUIDE
Fuse
Link
D Cell
D Cell
Ensure correct polarities as
shown
Cyclon
Cyclon
SEALED-LEAD
RECHARGEABLE
BATTERY
NONSPILLABLE
MADE IN USA

4.9. Battery connections

The batteries are secured in recesses in the rear cover, with their terminals protruding inside it. The telephone is shipped from the factory with the battery cable disconnected (under the rear cover). The batteries are linked and fused as shown below.

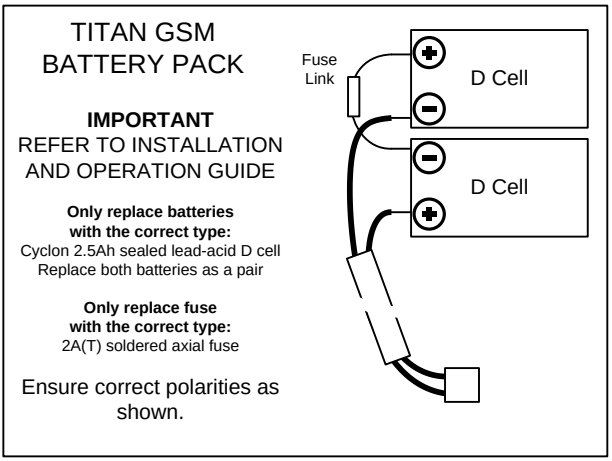

Always ensure the batteries are connected before connecting the power supply, or the batteries may not charge.

IMPORTANT

Batteries must only be replaced by the correct type and must be connected as shown.

CAUTION

Risk of explosion if batteries are replaced by an incorrect type.

Dispose of used batteries according to recycling instructions (section 10)

4.10. Connecting the telephone

The Titan GSM telephone needs to be connected to an external DC power source and a suitable antenna.

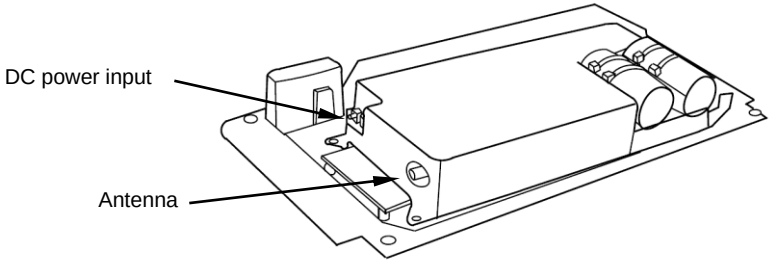

If glands are used, insert each cable through the gland body and tighten the gland nut sufficiently to clamp the cable, making a seal. Ensure sufficient cable is left to allow removal of the faceplate or front casing without straining the cable.

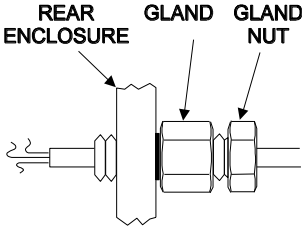

IMPORTANT: If only one gland entry is used, the BLACK blanking plug fitted to the second gland position must be left in place.

The antenna cable screws onto the SMA connector provided.

Connect the DC power source to the 2 pole terminal plug as shown, noting that the positive terminal is the one adjacent to the red button.

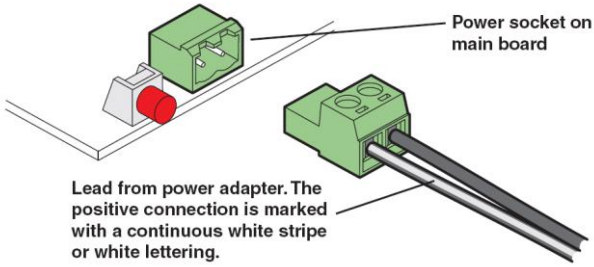

Power requirement is 9-18V dc, 3.6W. The telephone can be connected directly to a solar panel without the need for a charge controller.

When power is first connected, the Charge LED (see below) will light.

Always ensure the batteries are connected before connecting the power supply, or the batteries may not charge.

4.11. LED indications and operating states

Located at the base of the main circuit board (visible through the transparent cover) are three red LED indicators that provide useful status information.

Note that, to save power, the LEDs will all go off after 5 minutes of inactivity. Lifting the handset briefly will make them come back on.

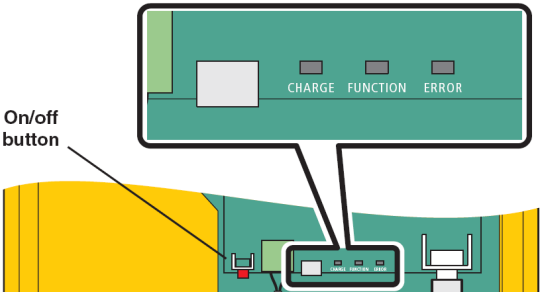

The indicator functions are as follows:

- CHARGE - On, whenever external power is first applied.
- FUNCTION - Indicates the current operation. See the table below.
- ERROR - Indicates problems with operation. See the table below.

FUNCTION	ERROR	Meaning
Off	Off	Phone switched OFF. (or power save mode – lift handset briefly to be certain)
Short/fast	Off	Initialising/searching.
Short/slow	Off	Standby – ready for use.
Long/fast	Off	Incoming call.
On	Off	Call in progress.
Off	Long/Fast	SIM card is locked, PIN code required. *
Long/fast	Long/Fast	SIM card is blocked, PUK code required. *
Short/slow	Short/slow	Weak signal.
Off	Short/slow	Insufficient power to operate, but charging.
Off	On	Fault, such as no SIM.
On	On	Momentary indication to acknowledge a press of the On/Off button

* Unless the Titan GSM is a version with a full numeric keypad, it is not possible to rectify these faults from the telephone itself. Please ensure that the SIM is not locked (or blocked) prior to use.

4.12. Switch on and test

1. Once the SIM card has been fitted and DC power connected, press and hold the red on/off button located next to the power connector. The FUNCTION and ERROR indicators will both light and will then go off, when this occurs release the button. The FUNCTION indicator will flash rapidly to indicate that the phone is initialising and is searching for a valid mobile network.

2. After several seconds, the FUNCTION indicator should flash less frequently to indicate that a call may be made or received. If there is an error, for example no SIM installed, the ERROR indicator will light. See the table on the previous page for a full list of indicator conditions.

3. Using a mobile phone, send an SMS status command to the phone requesting the current status. Use the following format for your outgoing message:

   1234STAT

   (where 1234 is the default PIN code.) The reply should be similar to the following:

   Signal: -93dBm
   Vin:11.97V
   Bat:0V
   Temp
   Now: 23
   Min: 19
   Max: 30
   Humidity: 40%
   Battery: Fault
   Audio test: Pass
   Ver: 1.0
   IMEI: 359998042484305

4. If all is well with the status response, record the information for reference, to compare with later status reports.

5. Refit the faceplate:

   a. Open the spring loaded door of the pre-mounted rear enclosure (where fitted), taking care not to trap fingers.

   b. Carefully place the faceplate onto its mounting flange, taking care not to trap any cables.

   c. Insert the 4 fixing screws and use a 3mm hex key to tighten.

d. Check that a good weatherproof seal exists between the front and rear casings.

6. Make a call to the phone to ensure the sounder operates. Then make an outgoing call from the phone to an external number. This will only be possible on a phone with a full keypad otherwise auto-dial numbers will first need to be programmed, see section 5.

For many installations, the steps outlined so far will result in a fully functioning phone.

However, the Titan GSM is also highly customisable for many situations. Detailed configuration is made possible by either sending specially formatted SMS messages from another phone or by connecting a computer via the USB port. For details, please see section 5.

4.13. Switching the phone off (power down)

If the phone is to be shipped, stored, or the SIM changed, press and hold the pushbutton until the FUNCTION and ERROR indicators extinguish. The phone will now be in the Off (Charge Only) state.

4.14. Operating states of the phone

Titan GSM has the following operating states:

- On - The phone is fully powered and ready to make and receive calls.
- Charge only - This is the state that the phone will enter when external DC power is applied. If power is removed, the phone will enter the “Off” state.
- Off - This is the state in which the phone is shipped from the factory to prevent battery drain in transit and storage.

The SIM card should only be fitted or removed if the telephone is in the OFF state.

If the phone is “Off” and has sufficient battery power or is in “Charge only” mode, pressing the on/off pushbutton will put the phone into the “On” state.

The “On” state is remembered, regardless of the amount of charge in the battery or the availability of DC supply.

If the ERROR indicator is flashing Short/Slow, leave the external DC power connected to fully charge the battery, or at least until the ERROR indicator stops flashing.

Note: to fully charge the battery may take in excess of 5 hours depending on the current charge state of the battery.

If the phone is “On” and the battery charge becomes exhausted, the phone will turn off. Once the external DC supply is restored, the phone will automatically enter the “On” state and also start charging the battery.

5. Programming, configuration and diagnostics

The Titan GSM has numerous features that can be configured using commands sent to it either via SMS messages from another phone or by a computer connected to the internal USB port. Most commands entered via the USB port are also accepted while the phone is in charge only mode, i.e. switched off but still powered by an external DC power source.

5.1. Sending Commands by SMS

The first four characters of an SMS command must be the phone PIN code (the default is 1234). This is then followed by the command(s).

NOTE the PIN code referred to in this manual is a security code specifically for programming the GAI-Tronics GSM telephone via SMS commands – it is not a lock code and is not related to the SIM card. It is not required for making or receiving calls.

Example 1: 1234STAT will return status information about the phone.

Example 2: 1234CFG5=1 configures the phone to inhibit incoming calls.

Notes for SMS commands

- You can enter a space character after the PIN for clarity; this will be ignored by the phone.
- All commands that do not implicitly require a response are automatically replied to with a summary of the phone status. This automatic reply may be suppressed by placing a full-stop character after the pin number. For example, 1234.cfg5=1 will change the configuration without replying. An error in the command will always result in a reply.
- Commands may be concatenated by entering a semicolon delimiter, for example 1234CFG5=1;STAT
- Commands are not case sensitive.
- To read multiple parameters, a suffix wild card may be used, for example: CFG*?

5.2. Sending Commands via USB port

Note that the preferred method for sending commands is normally SMS. Use of USB commands requires a degree of technical skill, a familiarity with serial communications protocols, including the use of a suitable communication program (for example Hyperterminal (not supplied)). A micro USB connector

lead (not supplied) will be required to connect the phone to a suitable USB port.

IMPORTANT: Before connecting the Titan GSM to a computer via USB, ensure the Silicon Labs USB device driver software has been downloaded from

www.silabs.com/products/mcu/pages/usbtouartbridgevcpdrivers.aspx

Ensure that the correct version for your operating system is installed.

Configure a suitable communication program to connect to the virtual COM port assigned to the USB driver. Connect at 115200bps 8/N/1.

The first three characters of a USB programming command must be AT! This is then followed by the command(s).

Example 1: AT!STAT<cr> where <cr> is a carriage return/enter

Example 2: AT!CFG5=1<cr> sets the phone to inhibit incoming calls.

Notes for USB commands

- The AT! Commands are specific to this product range and are not related to the Hayes™ AT command set
- Commands may be concatenated by entering a semicolon delimiter, for example AT!CFG5=1;STAT<cr>

5.3. List of Commands (for use with either SMS or USB)

STATn Returns the status of the phone. If n is omitted, it is interpreted as zero.

STAT (or STAT0) for general status, useful during installation:

Signal: -89dBm (or N/A)
Vin: 12.25V
Bat: 0V
Temperature – (in degrees Celsius)
Now: 20
Min: 18
Max: 26
Humidity: 51%
No fault/Fault
Ver: 1.0
IMEI: 357749031743900

Note that normally the signal should be between -90 and -50, the supply should be between 9 and 18V, and the Battery should be between 4.00 and 4.40V.

The list above is the information returned via SMS. If requested via USB, a STAT0 command will also return for example:

State: **n** (phone state, see table below)

DCDC: 3.88V
Bat current: -100mA

If a fault is shown, send stat1 for more details.

State (**s**) value returned from a STAT0 command:

Value	Meaning
1	Outside operating temperature limits.
2	Charge only.
3	Insufficient power to operate in solar charge mode.
4	Error condition, communication failure with wireless module.
5	Phone is initialising.
6	Checking SIM present.
7	No SIM installed.
8	Checking SIM lock.
9	Waiting for SIM PIN.
10	Waiting for SIM PUK.
11	Post SIM unlock initialisation phase.
12	Settle time for reading SMS memory.
13	Flushing SMS memory.
14	Ready for call (**always in this state when replying via SMS**)

STAT1 for information about faults:

Hook: On/Off
Power break: No/Yes
Loop: Pass/Fail
Acoustic loop: Pass/Fail
Keyboard: Pass/x stuck on
Battery: OK/Fault

Explanation of stat1 fault results:
Hook: On = normal, Off = the handset is off its cradle
Power break: No = normal, Yes = power has been interrupted
Loop: Pass = normal, Fail = the handset integrity loop is broken, meaning that the handset has been detached or vandalised
Acoustic loop: Pass = normal, Fail = either the microphone or earpiece is not responding, ie the handset is faulty or blocked.
Keyboard: Pass = normal, x stuck on = a pushbutton is permanently stuck in, preventing anyone from using the pushbuttons.
Battery: OK = normal, Fault = the battery is not holding charge properly, even if it has the correct voltage.

STAT2 All information in a format intended for a computer:

index:val,index:val... to index 14

The index values are as follows:

0= Signal in –dBm (eg -89).

1= Supply voltage in volts (eg 12.3)

2 = Battery voltage (eg 4.1)

3 = Temperature now (in Celsius) (eg 22)

4 = Minimum temperature recorded (eg -6)

5 = Maximum temperature recorded (eg 37)

6 = Model/HW ver./Firmware ver. (eg 1/2/1.03)

7 = Hook switch state (0 is on-hook, 1 is off-hook)

8 = Power break (0 for none, otherwise 1. Cleared on read)

9 = Handset hardware loop state (0 for OK, 1 for fault)

10 = Acoustic loop test (0 for pass, 1 for fail, 2 for test not applicable)

11 = Keyboard (0 is OK, 1:n for fail where n is the key number)

12 = Call state (0 for idle, 1 for call in progress,)

13 = Battery state (0 for OK, 1 for fault)

14 = IMEI (eg 357749031743900)

STAT3 Network and power information:

Operator: “operator name”

Network: “network name”

Mode: GSM/GPRS/EDGE/WCDMA/HSDPA/HSUPA/HSPA

Signal: -89dBm

Avg battery current

When Idle: 10mA

During Call: 200mA

STAT4 Environmental information: Temperatures

Transmitter

Now: 25

Min: 23

Max: 43

Main board

Now: 25

Min: 23

Max: 43

Humidity

Now: 53%

Min: 42%

Max: 59%

(the values may be cleared using CLRFAULT or INIT commands)

STAT5 Fault status in a format intended for a computer/monitoring service: Unlike the other status commands, this format does not send “Stat5:” preceding the information. Otherwise the information is the same as type 1, but each item is sent on one line with each field separated by a comma. This is intended for a monitoring centre

Table 3 state value returned in STAT0 command via USB.

Value	*Meaning*
1	Too hot to make calls.
2	Too cold to make calls
3	Charge only
4	Insufficient power to operate.
5	Error condition, communication failure with wireless module.
6	Phone is initialising.
7	Checking SIM present.
8	No SIM installed (emergency calls possible).
9	Checking SIM lock
10	Waiting for SIM PIN.
11	Waiting for SIM PUK.
12	Post SIM unlock initialisation phase.

13 Settle time for reading SMS memory.

14 Flushing SMS memory.

15 Ready for call (always in this state when replying via SMS).

CLRTEMP Clears the maximum and minimum temperature memories (as a result, they will initially show the current actual temperature).

CFGn=x Read and write configuration setting:

CFG0 My number sending. Determines whether the phone number is declared to the destination being called:

0 = Use the setting defined by the network (default).

1 = Number is always sent (if supported by the network).

2 = Number is always withheld.

CFG1 Dial delay for models with a full keypad, This determines the delay after dialling the last digit until the call is made:

1 to 9 seconds (default is 3).

CFG2 Ring cadence. Different cadences useful to differentiate between phones in close proximity:

0= Silent

1= UK style (default).

2 = UK alternate.

3 = US

CFG3 Tone region. The frequency and cadence used for progress tones:

0 =UK (default).

1 = Ireland.

2 = Holland.

3 = USA

.... others on request ....

CFG5 Call restrictions: Restrict use of the phone.

0 =No restriction (default).

1 = Inhibit incoming calls.

2 = Inhibit outgoing calls

3 = Inhibit incoming and outgoing calls.

4 = Restrict dialled numbers to match Memories 0-9 or 112/999/911

CFG6 Call Time restriction. Limit the duration of an outbound call. When only 30 seconds remain, a beep or announcement is heard in the handset to warn the caller.

0-120 minutes (default 0, no restriction).

CFG8 Call progress announcement mode. Instead of tones, voice announcements may be programmed to play according to the particular condition of the phone. For example “We are unable to connect your call, please try again later”. Please note, these announcements must be specified at order time and factory programmed by GAI-Tronics. Please contact us for details. If programmed, this setting acts as follows:

0 = No announcement, only progress tones (default).

1 = Normal dial tone, then progress announcements.

2 = Prompt replaces dial tone then progress announcements.

CFG9 Automatic sending of SMS status. The status of the phone may be sent automatically when an error event occurs and also regularly at specified time. The time is set with the “STIME” command and the destination number for the SMS is set with “PNUM11”.

0 = No status or error report (default).

1 = Reports STAT2 when event occurs.

2 = Reports STAT2 when event occurs and also status with or without errors at time or period specified.

3 = Reports STAT1 when event occurs.

4 = Reports STAT1 when event occurs and also status with or without errors at time or period specified.

5 = Reports STAT5 when event occurs.

6 = Reports STAT5 when event occurs and also status with or without errors at time or period specified.

The error conditions which initiate automatic sending of status may be selected with CFG22.

Note, this automated status message is a "STAT2" message intended to be read by a computer. It is a single string of text

consisting of 15 codes with values, separated by commas, (0: <value>, 1:<value>, 2: <value>, …. eg:

STAT2: 0:-75, 1:11.95, 2:4.28, 3:22, 4:-6, 5:37, 6:1/2/1.3, 7:0, 8:0, 9:0, 10:0, 11:0, 12:0, 13:0, 14: 357749031743900

Where the codes are:

0 = Signal in dBm (eg -75)

1 = Supply voltage in volts (eg 11.95)

2 = Battery voltage (eg 4.28)

3 = Temperature now (in Celsius) (eg 22)

4 = Minimum temperature recorded (eg -6)

5= Maximum temperature recorded (eg 37)

6 = Model/HW ver./Firmware ver. (eg 1/2/1.3)

7 = Hook switch state (0 is on-hook, 1 is off-hook)

8 = Power break (0 for none, otherwise 1. Cleared on read)

9 = Handset hardware loop state (0 for OK, 1 for fault)

10 = Acoustic loop test (0 for pass, 1 for fail, 2 for test not applicable)

11 = Keyboard (0 is OK, 1:n for fail where n is the key number)

12 = Call state (0 for idle, 1 for call in progress,)

13 = Battery state (0 for OK, 1 for fault)

14 = IMEI (eg 357749031743900)

Note that faults are shown in the codes between 7 and 13.

For a more human-readable summary of faults, use STAT1 if required.

The error condition(s) which initiate(s) automatic sending of status are selected with CFG22

CFG10 SMS command enable (via USB only): If the phone is to be used with a PC connected via USB with software that handles SMS, disable the SMS commands.

0 = Disabled

1 = Enabled(Default)

CFG12 Maximum dialled number length. The maximum number of digits accepted may be changed (default 20).

CFG15 Activate relay for ring indication.

One of the relays may be used to activate an external sounder. The relays switch at selected ring cadence.

0 = No action (default).

1 = Use relay 1 with ring cadence.

2 = Use relay 1 continuously.

3 = Use relay 2 with ring cadence.

4 = Use relay 2 continuously.

CFG16 Power supply type. When selecting 1 for external battery, low voltage power alert provides notice for an external 12V battery requiring replacement/charging.

0 = Normal and solar DC supply (default).

1 = External battery

CFG17 Automatic send of call log at threshold: Calls are automatically logged to a total capacity of 240 entries on a first in first out basis. If the log is not automatically sent, or read using the “CLOG” command, the oldest entries will be overwritten. The call log data is mainly intended to be processed by computer software. See section on call log format.

0 = Automatic sending of call log disabled (default).

1 - 240 = number entries at which point call log sending is triggered

This function may also be enabled when the automatic sending is enabled, but normally only one method would be used

CFG18 Automatic timed sending of call log: When enabled, the call log will be sent at the time specified with **LTIME** default is midnight).

0 = Disabled (default).

1 = Enabled

CFG19 Speaker level. The output level may be adjusted:

0 = -6dB

1 = -3dB.

2 = Normal level (default).

3 = +3dB

4 = +6dB

CFG20 Microphone gain. The microphone gain may be adjusted in 11 steps of 1.5dB.

0 = Normal level (default).

1 = +3dB

2 = +6dB

3 = +7.5dB

CFG21 Voice prompt level. The output level may be adjusted in 13 steps of 1dB.

0 = -6dB.

1 = -3dB.

2 = Normal level (default)..

3 = +3dB.

4 = +6dB.

CFG22 Error conditions to report.

When reporting on error condition is enabled with CFG9=1, events that trigger a report may be controlled by setting bits with this command.

Fault	Decimal	Default setting	Bit
Handset loop failure	1	1	0
Stuck key	2	1	1
Battery failure	4	1	2
Low battery	8	1	3
Power break	32	0	5
On/Off/Restart	64	0	6

The default is therefore 31

Notes:

- Handset loop indicates that the handset cord has been severed or disconnected.
- A stuck key is determined by a key being held down for in excess of one minute.
- Battery failure is determined by an abnormal rate of change of the battery voltage when subjected to charge current.

- Low battery is when there is less than 20% charge remaining.
- Temperature is always alerted when it is outside operating limits.
- Power break is when power is lost (when previously externally powered).
- On/Off/Restart will report if:
    - The unit is turned on.
    - The unit is turned off by the user.
    - The unit has turned off due to battery exhaustion.
    - The unit had been reset.
    - The unit has restarted.
- Note that error states will latch until they have been reported – in other words if an error self-clears it will still appear in the next report. This is to ensure that intermittent faults are reported. “Reported” in this case means reported by any of the available methods, i.e. any of the available options of CFG9, or on a timed basis controlled by STIME, or by a manually issued STATn command. Error states can also be cleared with CLRFAULT or INIT commands.

CFG23 Call log enable:

This enables the storing of a call log into a non -volatile 240 entry FIFO memory.

0 = Disable call logging (default).

1 = Enable call logging.

CFG24 Tones level: The output level may be adjusted in 13 steps of 1dB.

0 = -6dB

1 = -4dB

2 = -2dB

3 = Normal level (default).

4 = +2dB

5 = +4dB

6 = +5dB

7 = +6dB

CFG25 Wireless mode:

The wireless mode can be controlled. It is useful to fix to GSM in areas of weak WCMDA. The phone needs to be turned off then on again or the INIT command issued to invoke the mode of operation.

0 = Automatic (default)

1 = GSM (2G) only

2 = WCDMA / UMTS (3G) only

CFG26 Automatically answer call:

Incoming calls to the help point may be answered automatically.

0 = Do not automatically answer call (default).

1 = Automatically answer call.

CFG27 Number of dial attempts: Number of attempts to connect an outgoing call If roll over numbers are provided, each roll over number is attempted in sequence before another sequence is repeated for the number of dial attempts.

1-4 attempts (default 1 attempt).

CFG28 Call connect timeout duration. Duration in seconds when outgoing call is not answered before the call is abandoned or dialling a roll over number is attempted. This applies to help point or auto dial modes

5 to 99 seconds (default 20 seconds).

CFG29 Ring volume: The ring volume from the speaker may be adjusted:

0 = -6dB

1 = -4dB

2 = -2dB

3 = Normal level (default).

4 = +2dB

5 = +4dB

6 = +6dB

CFG30 Power break period report threshold:

Minimum power break period before reporting power break.

0-1000 minutes (default 0 minutes).

If this value is not zero, the duration of the power outage is provided for STAT1 & STAT5 when power is restored.

CFG31 Number of days between sending automatic status:

1 to 28 days (default 1/daily).

CGF32 Call state activation of relay 1:

0 = No action (default).

1 = When an emergency call is dialled and during the call

2 = When auto-answered calls are connected.

3 = During any active call.

4 = When an incoming call is connected.

5 = When an outgoing call is connected.

6 = When an outgoing call is calling but not yet connected.

CFG33 Call state activation of relay 2:

0 = No action (default).

1 = When an emergency call is dialled and during the call

2 = When auto-answered calls are connected.

3 = During any active call.

4 = When an incoming call is connected.

5 = When an outgoing call is connected.

6 = When an outgoing call is calling but not yet connected.

CLOCK Only via SMS, sets the clock to the time recorded in the SMS delivery from the mobile network. For setting via USB, see ETSI" +CCLK" command.

CLOGn Returns n number of call log entries (oldest first) in multiple SMS as required. Once an SMS is accepted by the network, log entries in that SMS are deleted. To extract the entire log, n should be 250. CLOG? Returns the number of available log entries.

CLRLOGn Clears the n number of oldest log entries without reading them. If n is >= the number of currently stored entries, all entries will be deleted

CLRFAULT Clears any fault condition without restarting the phone.

CLRCALL Ends any call in progress.

CLRTEMP Sets the maximum and minimum temperature & humidity memory to the current temperature & humidity.

DRYSENS Invokes a "dry cycle" where the humidity sensor is heated until the humidity is less than 3% or for a maximum period of 5 minutes. The max/min pcb temperature and humidity levels are reset 5 minutes after completion.

HVER Returns the hardware version number.

INIT Restarts the phone (cold boot) and clears any hardware error states.

LTIME=n Time to send regular SMS call log 24h format. Default 0000: HHMM. For example: LTIME=2330.

OUTn ON/OFF Sets the output of relay 1 or 2 on or off. Same function as OUTPUT but different syntax for Gai-Tronics application. Responds with IMEI"OUT"n ON/OFF.

OUTPUTn=i Sets the output of relay 1 or 2 to 0(off) or 1(on). If a single bistable relay is installed, selecting relay one or two will make no difference

PHPIN=nnnn Read (only via USB) and write phone PIN, fixed length of 4 digits (default 1234). For example: PHPIN=4321.

PNUMn **Read and write phone numbers.**

There are 12 memory locations (PNUM0-PNUM11) which are used to store phone numbers.

For example: PNUM0=0123456789"Ace Taxis"

(The name field may be omitted.)

An existing number may be cleared, by entering a null value for example:

PNUM0=,11= (will clear numbers & names from memories 0 and 11).

3 locations (PNUM0 to PNUM 2) are reserved for memory keys/buttons. 6 locations (PNUM3 to PNUM8) are used for rollover numbers (see below). Locations PNUM9 and PNUM10 are not used in Help Points.

The following characters are allowed 0-9, *, #, +, A, B, C, D.

Phone numbers must start with 0-9 or + except for *31* and #31#.

Special dial codes:

- ***31***<phonenumber> - Forces sending of caller ID.
- **#31***<phonenumber> - Suppresses sending of caller ID.
- ***1** The character sequence "*1" can be used at the end of the memory number to add a one second pause after the call is connected. Any digits after the *1 are then sent as DTMF tones. Additional pauses may be added by including multiple *1s.

  For example, +4412345678901*1*123 will dial the UK (+44) to 12345678901, then pause for 2 seconds, then send DTMF tones 23.

- The * character maybe sent using **

Memory allocations:

PNUM11 - Number to send automatic SMS.

PNUM0 – Help/Emergency/M1 primary number.

PNUM1 - Information/M2 primary number.

PNUM2 - M3 primary number.

PNUM3 - Help/EmergencyM1 1st rollover number.

PNUM4 - Information/M2 1st rollover number.

PNUM5 - M3 1st rollover number.

PNUM6 - Help/Emergency/M1 2nd rollover number.

PNUM7 - Information/M2 2nd rollover number.

PNUM8 - M3 2nd rollover number.

Special behaviour

Rollover

Each memory button can have up to 2 rollover numbers as shown above. If the call to the primary number fails (eg the call cannot be connected or is busy) or if it is not answered within the time defined by CFG28, the phone will then try to place the call to the 1st rollover number for that button. Again if that call fails it will try the 2nd rollover number. If all the rollover attempts fail the phone will retry the whole sequence again starting with the primary number – the number of retries is set by CFG27.

Emergency override

For two button Help Points with buttons designated "Emergency" and "Information", pressing the Emergency button when the phone is in an Information call will cause it to drop the current call and make a call to the designated Emergency (M1) number.

BPOWER Initiates a test of power consumption from the battery. If the battery is over 80% charged, the internal supply voltage is reduced to force the phone to draw power from from battery for 30 minutes. The average current taken during this time is recorded and may be read with STAT4.

REPORT=n Shorthand way of combining PNUM11=n and CFG9=3,where n is the phone number. For example REPORT=07123456789”Bobs mobile”. The name field may be omitted. The STAT1 will be sent if an error condition occurs.

Entering REPORT without a number turns off the automatic error reporting and is equivalent to CFG9=0. For example, REPORT=

RESTORE=n Restore settings of the phone

n = 0 Restore all settings but retain phone numbers and call log.

n = 1 Also clear phone number memories

n = 2 Restore settings, phone number memories & call log (restore all)

RLYDUR=n Duration before relay 1 is automatically turned off.

Default 0, maximum 65535 milliseconds. For example: RLYDUR=200**.** Note: The mechanical delay in relay activation is about 10ms, but the minimum coil activation period is restricted to 20ms to provide a wide margin.

STIME =n Time to send daily or interval status SMS, set in 24h format Default 0000:HHMM. For example: STIME=2315 will send status once per day at 23:15. STIME=2415 will send status every 15 minutes Maximum time set to 3600 (once per 12 hours).

VER Returns the firmware version number.

6. Troubleshooting

Use the following section to diagnose and remedy various common fault conditions.

6.1. Phone not responding to 1234stat0 request via SMS:

- If the unit is a full keypad version and the ON/OFF button is pressed, is there a dial tone (indicating the unit is ready to make a call) or is there pulsing dial tone (indicating no network connectivity)?
- With the faceplate removed check if any of the internal indicator lights are illuminated, if not, **briefly** press the On/Off button (see section 4.5) - do indicator lights come on? If yes, see Indicator functions under section 4.11 and the various FUNCTION and ERROR Light scenarios below;
- Check the unit is switched on by pressing the On/Off button, see section 4.12.
- If still no Indicator Lights on, check the unit is connected to an external DC power source. If necessary check the input voltage is in the range 9V to 18V.

- If no external DC power source is connected, check the internal battery is physically connected and if necessary check the terminal voltage coming from the battery pack is greater than 3.8V. If the voltage is below this value the unit could be in auto-shut off mode and the internal battery will need to be charged. Connect an external DC power source and allow the battery to charge for a minimum of 30 minutes; full charge will take 5 to 6 hours. See sections 7.2 and 7.3 on battery maintenance.
- If there is no voltage present across the internal battery terminals check the in line battery fuse. If the fuse has blown, check the internal battery leads have been connected with the correct polarity, if not remedy and replace the in line battery fuse assembly. NOTE: This assembly is a safety component and MUST ONLY be replaced with the correct in line fuse assembly from GAI-Tronics.

6.2. ERROR light is permanently ON

- Check the SIM card has been installed and has been installed correctly, see section 4.7.

6.3. ERROR light flashing Long/Fast

- This indicates the SIM card is locked and a PIN code is required to unlock it. Replace the SIM with one that is not locked.

6.4. FUNCTION and ERROR lights flashing Long/Fast

- This indicates the SIM card is blocked and a PUK code is required from the service provider to unblock. Replace the SIM with one that is not blocked.

6.5. FUNCTION and ERROR lights flashing Short/Slow

- This indicates a weak GSM signal.
- If the unit has responded to the 1234stat0 SMS command, then compare the results of the reported signal with the table below.
- If the unit is not responding to the 1234stat0 SMS command connect a laptop or similar computer to the internal USB port. Please see the preconditions for using the USB port in section 5.2.
- Signal level – the following is a guide to the received signal level along with suggestion action to take.

Signal	Comment	Action Required
-104 to -100dBm	Very weak signal, connection not reliable	Essential to re-site the external antenna.

Signal	Comment	Action Required
-99 to -90dBm	Poor signal, connection should be reliable but speech may be subject to interruption due to signal fading effects	Performance should be improved by re-siting the external antenna
-89 to -70dBm	Good signal condition	None specifically, re-siting antenna may give further improvement
-60 to -50dBm	Very good signal condition	None

7. Maintenance

Titan GSM requires very little maintenance in normal use, but please take note of the following to ensure that the telephone is kept in good working order:

7.1. Diagnostic check

Perform a regular status check by sending an SMS:

1234stat

Where 1234 is the PIN code.

The telephone will send back comprehensive information to assist maintenance and repair. Compare this information with that recorded earlier to check if anything has changed that might indicate a problem.

7.2. Batteries

The batteries fitted to Titan GSM are long-life, high performance batteries with an expected service life of 10 years under normal use.

They must only be replaced by the correct type, ordered from GAI-Tronics, and must always be replaced as a pair.

They are each held in place with 2 cable ties, and must be connected and linked by a fuse as shown in section 4.9.

Batteries and battery fuses must only be replaced by skilled personnel, only replaced with the correct parts supplied by GAI-Tronics, and only connected as shown.

Please contact GAI-Tronics if assistance is required.

Note that batteries will self-discharge if stored for long periods without being charged. Batteries may be stored for up to two years at room temperature

(max 25°C or 77°F) and recharged with no loss in cell reliability or performance capabilities. The recharge may be accomplished without resorting to special charging techniques. When batteries are stored at or near 25°C (77°F) we recommend checking the open circuit voltage (OCV) every 12 months and recharging when OCV readings approach 2.00 volts per cell (VPC). If storage temperatures are significantly higher than 25°C (77°F), even for short durations, the frequency of OCV audits must be increased.

Batteries can be charged using a battery charger intended to charge lead-acid batteries (2V per cell, 2.5Ah capacity), or alternatively by using the GAI-Tronics GSM Help Point telephone itself. The telephone has battery charging circuitry built in, so providing 12Vdc power to the telephone with batteries in situ (see sections 4.9 & 4.10), will charge the batteries under normal circumstances. A full recharge takes between 5 and 6 hours.

7.3. Overdischarged batteries

In the absence of external power, the telephone will turn itself off if the battery pack voltage (ie the voltage across both cells) falls below 3.7V, which is considered the end of discharge voltage (EODV). If this voltage continues to fall below 3.7V, the batteries may become overdischarged, to the point where they may not be capable of being recharged normally. It may still be possible to recover batteries from deep discharge if the voltage is above 3V (ie 1.5V per cell), but this requires a special procedure. Contact GAI-Tronics for details.

7.4. DC Power Adapter

If a mains to DC power adapter is used, it must be an approved type supplied by GAI-Tronics, and must be installed according to the instructions provided with it. In particular it must be installed with a 2-pole disconnect device compliant with EN 62368-1 Annex L.

Contact GAI-Tronics for details of available power supply units.

7.5. Cleaning

7.5.1 General

For normal cleaning we recommend "Virosol", manufactured by Clover products.
Carefully follow manufacturer's instructions for storage, handling and use.

7.5.2 Anti graffiti coating

Where polyurethane anti-graffiti coating or paint has been specified (as an option), it can be cleaned using Methylated Spirits or Methyl Isobutyl Ketone. Other cleaners can be used but should be tested on a small area first.

7.6. TMA

GAI-Tronics TMA is a fully featured software application (Telephone Management Application) for Windows® , offering the facilities to program, maintain, monitor and report on GAI-Tronics SMART, VoIP and GSM products.

Full details on the configuration and use of TMA are provided with the package itself.

Contact GAI-Tronics for further details.

TMA packages for GSM include the software (including comprehensive help documentation and installation instructions), external GSM terminal and dongle.

8. Aftercare

The purchase of your GAI-Tronics product does not end our commitment to you.

In addition to our warranty obligations, GAI-Tronics are able to offer various levels of maintenance packages, installation and commissioning packages and technical support, from ad-hoc repairs to full maintenance contracts.

By choosing GAI-Tronics as your aftercare provider you are ensured of manufacturer expertise and ISO 9001-certified quality control standards throughout the life of the product.

We can also supply a full range of accessories including mounting posts, beacons and high-volume sounders.

Contact GAI-Tronics for details. https://www.hubbell.com/gai-tronics/en/

9. Technical Specifications

Operational Requirements	
GSM Systems.	• 2G GSM Quad-band GSM phase 2/2+ 850/900/1800/1900 MHz • 3G WCDMA Penta band 800/850/900/1900/2100 MHz
Signal sensitivity	-90dBm for reliable operation
Not suitable for connection to:	• 4G / LTE Networks without 3G or 2G layer • GSM-R Networks
Product features	
Power supply	• 9-18Vdc @ 3.6W. • Suitable for supply directly from a 12V solar panel, without the need for a separate charge controller. • 12Vdc mains power adapter available separately. **Note: only use a power adapter supplied by GAI-Tronics.**
Current consumption (from 12Vdc supply)	• Idle (battery fully charged) – 3mA • Idle (battery discharged, maximum charge current) – 260mA • In a call (maximum transmit power, battery charging) – 160mA average • Due to the pulsed power requirement, the dc supply must be able to deliver a minimum of 1A peak.
Batteries	Internal high capacity, deep discharge lead-acid rechargeable. 2 x 2V 2.5Ah sealed cell **Talk time and standby time performance to TS.09-V7.6:** 7 hours talk time, 400 hours standby (using GSM) 6 hours talk time, 330 hours standby (using WCDMA)
Hookswitch	Electronic with no external moving parts
Ringer loudness	70dBA @ 1m
Handset	Suitable for inductive coupling to Hearing Aids having a `T' switch position. Tested to ETS 300-381

Monitored faults and sensors	• Power break • Acoustic path test • Stuck button • Battery condition • Supply voltage • Ambient temperature
Monitoring method	• Remote interrogation by SMS

Environmental limits	
Temperature:	Operating: -40ºC to +60ºC Storing: -40ºC to +70ºC
Relative Humidity	Up to 95% (non-condensing)
Ingress Protection	IP65. (Titan with door closed IP66) to EN60529
Physical characteristics	
Casing material	Die-cast Aluminium (Titan)
Handset Material	Cycoloy (2800) with stainless steel or polyester curled cord.
Weight	3 –5kg depending on variant.
Dimensions	Dependant on variant. See section 4.4
Compliance to standards	
European Directive	2014/53/EU Radio Equipment Directive. 2014/35/EU Electrical equipment designed for use within certain voltage limits (Low Voltage Directive) 2011/65/EC - Restriction of the use of certain hazardous substances in electrical and electronic equipment (recast) (RoHS 2) Directive
EMC	EN 55032 – Electromagnetic compatibility of multimedia equipment. Emission requirements. EN 55024 – Information technology equipment. Immunity characteristics. EN 301489-1 - Electromagnetic compatibility and Radio spectrum Matters (ERM); ElectroMagnetic Compatibility (EMC) standard for radio equipment and services. Part 1: Common technical requirements EN 301489-7 -ElectroMagnetic Compatibility and Radio spectrum Matters (ERM); EMC standard for radio equipment and services. Part 7: Specific conditions for mobile and portable radio and ancillary equipment of digital cellular radio telecommunications systems (GSM and DCS)
RF Spectrum Efficiency	3GPP TS 51.010-1 Mobile Station (MS) conformance specification; EN 301 511 Global System for Mobile communications (GSM); Harmonized EN for mobile stations in the GSM 900 and GSM 1800 bands

Safety	EN 62368-1 – Audio/video, information and communication technology equipment. Safety requirements. EN 60950-22 - Information technology equipment. Safety. Equipment installed outdoors

10. Recycling information

All components with the exception of the battery	The symbol shown here and on the product means that the product is classed as Electrical or Electronic Equipment and should not be disposed with other household or commercial waste at the end of its working life. The Waste of Electrical and Electronic Equipment (WEEE) Directive has been put in place to recycle products using best available recovery and recycling techniques to minimise the impact on the environment, treat any hazardous substances and avoid the increasing landfill. Business users should contact their suppliers and check the terms and conditions of the purchase contract and ensure that this product is not mixed with other commercial waste for disposal.
Battery	Store undamaged and damaged batteries in an impervious inert container and send to smelter for recycling. Must be treated as special waste, therefore contact GAI-Tronics for assistance if required.

11. CE Declaration

A copy of the current CE Declaration of Conformity is available from our website.
www.gai-tronics.org/support/certificates-approvals/

GAI-TRONICS
A division of Hubbell Ltd.

Brunel Drive
Stretton Park
Burton on Trent
DE13 0BZ
England
Tel: 01283 500500
Fax: 01283 500400
https://www.hubbell.com/gai-tronics/en/

The policy of GAI-Tronics is one of continuous improvement, therefore the Company reserves the right to change specifications without notice