FM1202 User Manual

V1.02

Table of contents

1 INTRODUCTION 6

1.1 ATTENTION 6
1.2 INSTRUCTIONS OF SAFETY 6
1.3 LEGAL NOTICE 7
1.4 ABOUT DOCUMENT 7

2 BASIC DESCRIPTION 7

2.1 PACKAGE CONTENTS 7
2.2 TECHNICAL FEATURES 9
2.3 TECHNICAL INFORMATION ABOUT INTERNAL BATTERY 10
2.4 ELECTRICAL CHARACTERISTICS 10
2.5 ABSOLUTE MAXIMUM RATINGS 11

3 CONNECTION, PINOUT, ACCESSORIES 11

3.1 HOW TO INSERT SIM CARD AND HOW TO CONNECT BATTERY INTO FM1202 DEVICE : 11
3.2 INSTALLING FM1202 DRIVERS 12
3.3 NAVIGATE LED 14
3.4 STATUS LED 14
3.5 MAIN CABLE WIRING 14
3.6 USB CONNECTION 15
3.7 ACCESSORIES 16

4 FIRMWARE 19

4.1 UPDATING FIRMWARE USING USB CABLE 19

5 OPERATIONAL BASICS 20

5.1 OPERATIONAL PRINCIPALS 20
5.2 SLEEP MODES 21
5.2.1 Sleep mode 21
5.2.2 Deep Sleep mode 21
5.3 VIRTUAL ODOMETER 22
5.4 FEATURES 22
5.4.1 Scenarios 22
5.4.2 Trip 23
5.4.3 Geofencing 23
5.4.4 iButton list 24
5.5 CONFIGURATION 25
5.6 CONFIGURATOR 25
5.7 READ RECORDS 26
5.8 SYSTEM SETTINGS 27
5.9 RECORDS SETTINGS 28
5.10 GSM SETTINGS, GPRS PART 28
5.11 GSM SETTINGS, SMS PART 29
5.12 GSM SETTINGS, OPERATOR LIST 30
5.13 DATA ACQUISITION MODE SETTINGS 30
5.14 FEATURES SETTINGS 34
5.14.1 Scenarios settings 34
5.14.2 Trip settings 35
5.14.3 Geofencing settings 36
5.14.4 SMS events 38
5.14.4.1 SMS events configuration 40
5.15 I/O SETTINGS 42
5.15.1 Monitoring 45
5.15.2 Din3/Ain IO element configuration 45
5.15.3 Event Generating 45
5.15.4 Hysteresis 46

6 SMS COMMAND LIST 47

6.1 SMS COMMAND LIST 47
6.1.1 getstatus 48
6.1.2 getweektime 48
6.1.3 getops 48
6.1.4 getcfgtime 48
6.1.5 getgps 49
6.1.6 getver 49
6.1.7 getinfo 49
6.1.8 getio 50
6.1.9 readio # 50
6.1.10 setdigout ## Y1 Y2 50
6.1.11 getparam #### 50
6.1.12 setparam #### # 51
6.1.13 getparam 1271 # 51
6.1.14 setparam 1271 # 51
6.1.15 readops # 51
6.1.16 flush #,#,#,#,#,#,# 51
6.1.17 sn # 52
6.1.18 banlist 52
6.1.19 crashlog 52

7 DEBUG MODE 52

8 PARAMETER LIST 53

8.1 PARAMETERS VALUE TYPES 53
8.2 SYSTEM PARAMETERS 53
8.2.1 Sleep Mode (ID=1000) 53
8.2.2 Sleep timeout (ID=200) 53
8.2.3 Analog Input value range (ID=1001) 53
8.2.4 Stop Detection Source (ID=1002) 53
8.2.5 Static Navigation (ID=1003) 54
8.2.6 Records (ID=201) 54
8.3 RECORDS PARAMETERS 54
8.3.1 Sorting (ID=1010) 54
8.3.2 Active Data Link Timeout (ID=1011) 54
8.3.3 Server Response Timeout (ID=1012) 54
8.4 GSM PARAMETERS 55
8.4.1 GPRS content activation (ID=1240) 55
8.4.2 APN Name (ID=1242) 55
8.4.3 APN username (ID=1243) 55
8.4.4 APN Password (ID=1244) 55
8.4.5 Domain (ID=1245) 56
8.4.6 Target Server Port (ID=1246) 56
8.4.7 Protocol (ID=1247) 56
8.4.8 SMS Login (ID=1252) 56
8.4.9 SMS Password (ID=1253) 56
8.4.10 SMS data sending settings (ID=1250) 56
8.4.11 SMS Data send week time schedule (ID=1273) 57
8.4.12 Authorized phone numbers (ID=1260-1269) 57
8.4.13 SMS Event PreDefined Numbers (ID=150-159) 57
8.4.14 Operator List (ID=1271) 57
8.5 DATA ACQUISITION MODES PARAMETERS 57
8.5.1 Home Network GSM operator code "Vehicle on STOP" parameters 57
8.5.1.1 Min Period (ID=1540) 57
8.5.1.2 Min Saved Records (ID=1543) 58
8.5.1.3 Send Period (ID=1544) 58
8.5.1.4 GPRS Week Time (ID=1545) 58

8.5.2 Home Network GSM operator code "Vehicle MOVING" parameters ... 58
8.5.2.1 Min Period (ID=1550) ... 58
8.5.2.2 Min Distance (ID=1551) ... 59
8.5.2.3 Min Angle (ID=1552) ... 59
8.5.2.4 Min Saved Records (ID=1553) ... 59
8.5.2.5 Send Period (ID=1554) ... 59
8.5.2.6 GPRS Week Time (ID=1555) ... 59
8.5.3 Roaming Network GSM operator code "Vehicle on STOP" parameters ... 60
8.5.3.1 Min Period (ID=1560) ... 60
8.5.3.2 Min Saved Records (ID=1563) ... 60
8.5.3.3 Send Period (ID=1564) ... 60
8.5.3.4 GPRS Week Time (ID=1565) ... 60
8.5.4 Roaming Network GSM operator code "Vehicle MOVING" parameters ... 60
8.5.4.1 Min Period (ID=1570) ... 60
8.5.4.2 Min Distance (ID=1571) ... 60
8.5.4.3 Min Angle (ID=1572) ... 60
8.5.4.4 Min Saved Records (ID=1573) ... 61
8.5.4.5 Send Period (ID=1574) ... 61
8.5.4.6 GPRS Week Time (ID=1575) ... 61
8.5.5 Unknown Network GSM operator code "Vehicle on STOP" parameters ... 61
8.5.5.1 Min Period (ID=1580) ... 61
8.5.5.2 Min Saved Records (ID=1583) ... 61
8.5.5.3 Send Period (ID=1584) ... 62
8.5.5.4 GPRS Week Time (ID=1585) ... 62
8.5.6 Unknown Network GSM operator code "Vehicle MOVING" parameters ... 62
8.5.6.1 Min Period (ID=1590) ... 62
8.5.6.2 Min Distance (ID=1591) ... 62
8.5.6.3 Min Angle (ID=1592) ... 62
8.5.6.4 Min Saved Records (ID=1593) ... 63
8.5.6.5 Send Period (ID=1594) ... 63
8.5.6.6 GPRS Week Time (ID=1595) ... 63
8.6 FEATURES PARAMETERS ... 63
8.6.1 Digital Output No.1 usage scenarios (ID=1600) ... 63
8.6.2 Max Acceleration Force (ID=1602) ... 63
8.6.3 Max Braking Force (ID=1603) ... 63
8.6.4 Max Angular Velocity (ID=1604) ... 64
8.6.5 Max allowed Speed (ID=1605) ... 64
8.6.6 Digital Output No.2 usage scenarios (ID=1601) ... 64
8.6.7 Trip (ID=1280) ... 64
8.6.8 Start Speed (ID=1281) ... 64
8.6.9 Ignition Off Timeout (ID=1282) ... 64
8.6.10 Trip Continuous distance counting (ID=1283) ... 65
8.6.11 Geofencing ... 65
8.6.11.1 Frame border (ID=1020) ... 65
8.6.11.2 Geofence Zone #1 Shape (ID=1030) ... 65
8.6.11.3 Geofence Zone #1 Priority (ID=1031) ... 65
8.6.11.4 Geofence Zone #1 Generate Event (ID=1032) ... 65
8.6.11.5 Geofence Zone #1 Longitude (X1) (ID=1033) ... 66
8.6.11.6 Geofence Zone #1 Latitude (Y1) (ID=1034) ... 66
8.6.11.7 Geofence Zone #1 Longitude (X2) (ID=1035) ... 66
8.6.11.8 Geofence Zone #1 Latitude (Y2) (ID=1036) ... 66
8.6.12 AutoGeofencing ... 67
8.6.12.1 Enable/Disable (ID=1101) ... 67
8.6.12.2 Activation Timeout (ID=1102) ... 67
8.6.12.3 Deactivate by (ID=1100) ... 67
8.6.12.4 AutoGeofence event Priority (ID=1103) ... 67
8.6.12.5 AutoGeofence event generating (ID=1104) ... 67
8.6.12.6 Radius (ID=1105) ... 67
8.6.13 iButton List (ID=1610-1659) ... 68
8.7 I/O PARAMETERS ... 68
8.7.1 I/O#1 property parameter (ID=1300) ... 68
8.7.2 I/O#1 priority (ID=1301) ... 68

8.7.3 I/O#1 High level (ID=1302) 68
8.7.4 I/O#1 Low level (ID=1303) 69
8.7.5 I/O#1 logic operand (ID=1304) 69
8.7.6 I/O#1 averaging length (ID=1305) 69
8.7.7 I/O#2 exception for a Digital input 3/Analog input option (ID=1320) 71
8.8 SMS EVENT CONFIGURATION 71
8.8.1 I/O#1 element SMS event configuration (ID=100) 71

9 MOUNTING RECOMMENDATIONS 73

9.1 CONNECTING WIRES 73
9.2 CONNECTING POWER SOURCE 73
9.3 CONNECTING IGNITION WIRE 73
9.4 CONNECTING GROUND WIRE 73
9.5 FM1202 INSTALLATION INSTRUCTION**ERROR! BOOKMARK NOT DEFINED.ERROR! BOOKMARK NOT DEFINED.**

10 FM1202 INSTALLATION INSTRUCTION 74

11 DOWNLOADING LOG USING "HERCULES" 80

12 CHANGE LOG 82

1 INTRODUCTION

1.1 Attention

Do not disassemble the device. If the device is damaged, the power supply cables are not isolated or the isolation is damaged, before unplugging the power supply, do not touch the device.

All wireless data transferring devices produce interference that may affect other devices which are placed nearby.

The device must be connected only by qualified personnel.

The device must be firmly fastened in the predefined location.

The programming must be performed using a second class PC (with autonomic power supply).

The device is susceptible to water and humidity in environment with IP class greater than IP67.

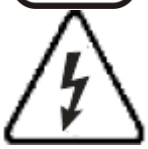

Any installation and/or handling during a lightning storm are prohibited.

FM1202 has USB interface;
Please use cables provided with FM1202 device.
Teltonika is not responsible for any harm caused by using wrong cables for PC <-> FM1202 connection.

1.2 Instructions of safety

This chapter contains information on how to operate FM1202 safely. By following these requirements and recommendations, you will avoid dangerous situations. You must read these instructions carefully and follow them strictly before operating the device!

The device uses a 6 V...30 V DC power supply. The nominal voltage is 12 V DC. The allowed range of voltage is 6 V...30 V DC.

To avoid mechanical damage, it is advised to transport the FM1202 device in an impact-proof package. Before usage, the device should be placed so that its LED indicators are visible, which show the status of operation the device is in.

When installing the connection cables to the vehicle, the appropriate jumpers of the power supply of the vehicle should be disconnected.

Before dismounting the device from the vehicle, the connection cables must be disconnected.

The device is designed to be mounted in a zone of limited access, which is inaccessible for the operator. All related devices must meet the requirements of standard EN 60950-1.

The device FM1202 is not designed as a navigational device for boats.

1.3 Legal Notice

Copyright © 2013 Teltonika. All rights reserved. Reproduction, transfer, distribution or storage of part or all of the contents in this document in any form without the prior written permission of Teltonika is prohibited.

Other products and company names mentioned here may be trademarks or trade names of their respective owners.

The manufacturer reserves the right to make changes and/or improvements at any time in design, functionality, parameters and electrical characteristics without any prior notice and without incurring obligations.

1.4 About document

This document contains information about the architecture, possibilities, mechanical characteristics, and configuration of the FM1202 device.

Acronyms and terms used in document

PC – Personal Computer.

GPRS – General Packet Radio Service

GPS – Global Positioning System

GSM – Global System for Mobile Communications

SMS – Short Message Service

AC/DC – Alternating Current/Direct Current

I/O – Input/Output

Record – AVL data stored in FM1202 memory. AVL data contains GPS and I/O information

AVL packet - data packet that is being sent to server during data transmission. AVL packet contains from 1 to 50 records.

2 BASIC DESCRIPTION

FM1202 is a terminal with GPS and GSM connectivity, which is able to determine the object's coordinates and transfer them via the GSM network. This device is perfectly suitable for applications, which need location acquirement of remote objects. It is important to mention that FM1202 has additional inputs and outputs, which let you control and monitor other devices on remote objects. FM1202 also has a USB port for device status log output and entering configurations.

2.1 Package contents[1]

The FM1202 device is supplied to the customer in a cardboard box containing all the equipment that is necessary for operation. The package contains:

FM1202 device;

USB cable (optional);

Ni-MH battery 7.2V, 400mAh

[1] Package content depends on Order Code, and can be customized by customer needs.

Basic characteristics

GSM / GPRS features:

- Teltonika TM11Q quad band module (GSM 850 / 900 / 1800 / 1900 MHz);
- GPRS class 10;
- SMS (text, data).

GNSS GGG303 Module features:

- Navigation Systems; GPS/GLONASS/;
- Protocol NMEA-0183: GGA, GGL, GSA, GSV, RMC, VTG;
- Up to -161 dBm sensitivity.

Hardware features:

- Cortex®-M3 processor;
- 16 MB internal Flash memory*
- Built-in accelerometer;
- Ni-MH internal rechargeable battery 7.2V 400mAh (optional).

Interface features:

- Power supply: 6 … 30V;
- USB port;
- 2 digital inputs;
- 1 digital/analog input (configurable);
- 2 open collector digital outputs;
- 1Wire® temperature sensor
- 1Wire® iButton
- LEDs indicating device status.

Special features:

- Any element event triggers (external sensor, input, speed, temperature, etc.);
- Highly configurable data acquisition and sending;
- Multiple Geo-fence areas;
- Sleep mode;
- Deep sleep mode;
- Configurable scenarios available;
- Real-time process monitoring;
- Authorized number list for remote access;
- Firmware update over GPRS or USB port;
- Configuration update over GPRS, SMS or USB port;
- TCP/IP or UDP/IP protocol support;
- 100’000 record storing*

* Teltonika reserves the right to modify the functionality of the device without any prior notice”

2.2 Technical features

Part name	Physical specification	Technical details
Navigation LED	LED	Power supply 6...30 V DC 2W Max Energy consumption with charged battery (at 12,6V Power Voltage): GPRS: ⎓ average 110 mA r.m.s, Nominal: ⎓ average 50 mA r.m.s, Sleep: ⎓ average 20 mA, Deep Sleep: ⎓ average less than 2 mA[2] Energy consumption while battery on charge (at 12,6V Power Voltage): GPRS: ⎓ average 160 mA r.m.s, Nominal: ⎓ average 80 mA r.m.s, GPS Sleep: ⎓ average 50 mA Operation temperature: -25°C ... +55°C Storage temperature: -40°C ... +70°C Storage relative humidity 5 ... 95 % (no condensation)
Modem LED	LED	
USB	Special USB socket, can be connected to PC using special USB wire (cable is optional)	

Table 1. FM1202 specifications

[2] When in Deep Sleep mode no data storing and sending is activated.

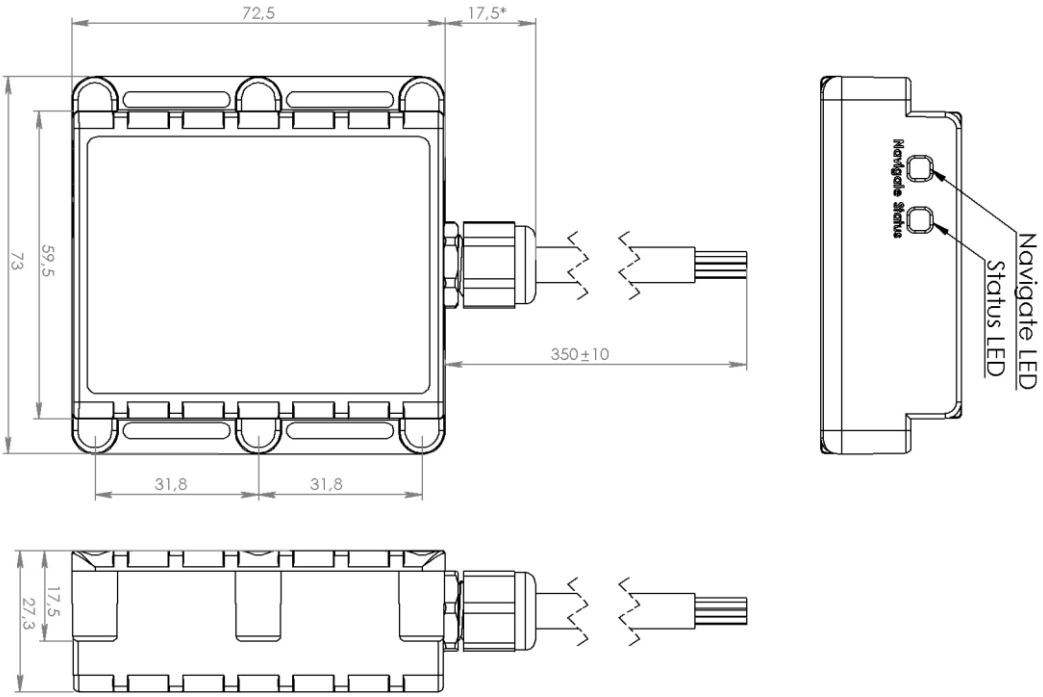

Figure 1. FM1202 view & dimensions (tolerance ±2mm)

2.3 Technical Information about internal battery

Ni-MH rechargeable battery, 7.2V, 400 mA.

FM1202 operating time with internal battery depends on temperature, data sending frequency (SMS and GPRS), and accumulator age, number of charge/discharge cycles.

2.4 Electrical characteristics

VALUE / CHARACTERISTIC DESCRIPTION	Min.	Typ.	Max.	Unit
Supply Voltage:				
Supply Voltage (Recommended Operating Conditions)	6		30	V
Digital Output (Open Drain grade):				
Drain current (Digital Output OFF)			120	uA
Drain current (Digital Output ON, Recommended Operating Conditions)			300	mA
Static Drain-Source resistance (Digital Output ON)			300	mOhm
Digital Input:				
Input resistance (DIN1, DIN2, DIN3)	15			kOhm
Input Voltage (Recommended Operating Conditions)	0		Supply voltage	V

Input Voltage threshold (DIN1)		7,5		V
Input Voltage threshold (DIN2, DIN3)		2,5		V
Analog Input:				
Input Voltage (Recommended Operating Conditions), Range1	0		10	V
Input resistance, Range1		120		kOhm
Input Voltage (Recommended Operating Conditions) Range2	0		30	V
Input resistance, Range2		146,7		kOhm

2.5 Absolute Maximum Ratings

VALUE / CHARACTERISTIC DESCRIPTION	Min.	Typ.	Max.	Unit
Supply Voltage (Absolute Maximum Ratings)	-32		32	V
Drain-Source clamp threshold voltage (Absolute Maximum Ratings), (I_{drain} = 2mA)			36	V
Digital Input Voltage (Absolute Maximum Ratings)	-32		32	V
Analog Input Voltage (Absolute Maximum Ratings)	-32		32	V

3 CONNECTION, PINOUT, ACCESSORIES

3.1 How to insert SIM card and how to connect battery into FM1202 device :

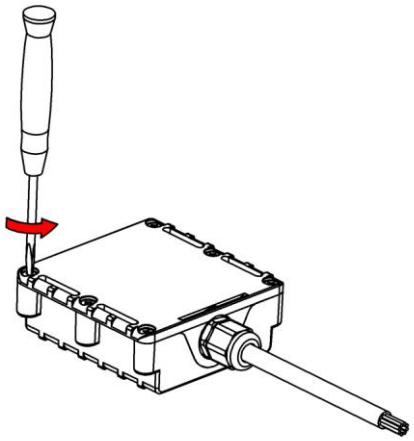

①

Open FM1202 case using screwdriver

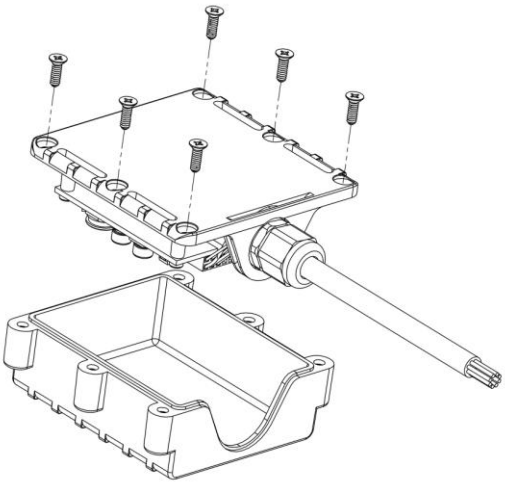

②

Remove FM1202 case

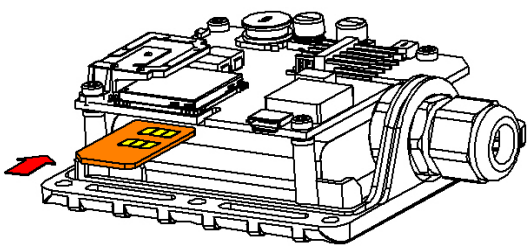

③

Insert SIM card as shown

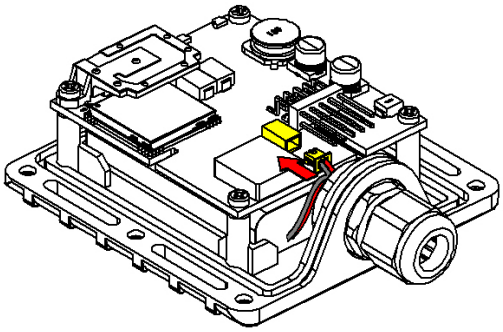

④

Connect battery connector as shown

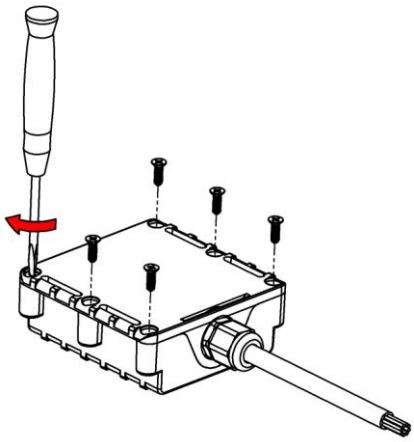

⑤

Attach case, and screw in the screws

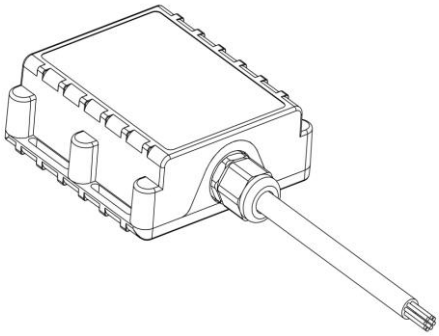

⑥

Device is ready

3.2 Installing FM1202 drivers

Software requirements:

- Operating system 32-bit and 64-bit: Windows XP with SP3 or later, Windows Vista, Windows 7.
- MS .NET Framework V3.5 or later (http://www.microsoft.com or http://avl1.teltonika.lt/downloads/tavl/Framework/dotnetfx35setupSP1.zip).

Drivers:

Please download Virtual COM Port drivers from Teltonika website: http://avl1.teltonika.lt/downloads/FM12/vcpdriver_v1.3.1_setup.zip

Installing drivers:

Extract and run VCPDriver_V1.3.1_Setup.exe. This driver is used to detect FM1202 device connected to the computer. Click 'Next' in driver installation window (figures below):

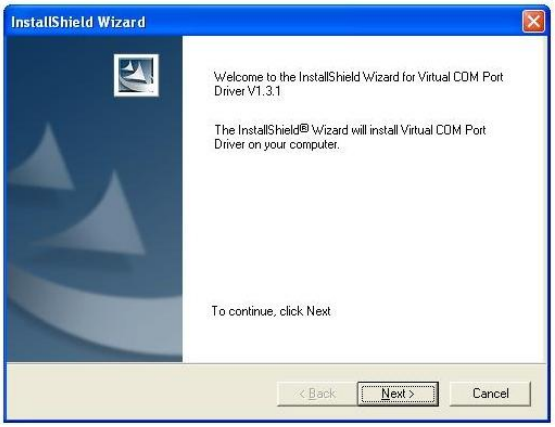

Figure 2. Driver installation window

This will launch device driver installation wizard. In the following window click 'Next' button again:

Figure 3. Driver installation window

Setup will continue installing drivers and will display a window about successful process at the end. Click 'Finish' to complete setup:

Figure 4. Driver installation window

You have now installed drivers for FM1202 device successfully.

3.3 Navigate LED

Behaviour	Meaning
Permanently switched on	GPS signal is not received
Blinking every second	Normal mode, GPS is working
Off	GPS is turned off because: • Deep sleep mode Or • GPS antenna short circuited

3.4 Status LED

Behaviour	Meaning
Blinking every second	Normal mode
Blinking every 2 seconds	Deep sleep mode
Blinking fast for a short time	Modem activity
Blinking fast constantly	Boot mode
Off	• Device is not working Or • Device firmware being flashed

3.5 Main cable wiring

Nr.	Wire Name	Description	Wire color
1	VCC (6÷30)V DC (+)	Power supply for module. Power supply range (6...30) V DC	Red
2	OUT 2	Digital output. Channel 2. Open collector output. Max. ⎓ 300mA.	Pink
3	OUT 1	Digital output. Channel 1. Open collector output. Max. ⎓ 300mA.	White
4	DIN 2	Digital input, channel 2	Gray
5	DIN 1	Digital input, channel 1 DEDICATED FOR IGNITION INPUT	Yellow
6	GND(VCC(6÷30)V DC)(-)	Ground pin. (6÷30)V DC (—)	Blue
7	AIN 1	Analog input, channel 1. Input range: 0-30V/0-10V DC	Brown
8	DATA_DALLAS	Data channel for Dallas 1-Wire® devices	Green

Table 2. Main cable wires description

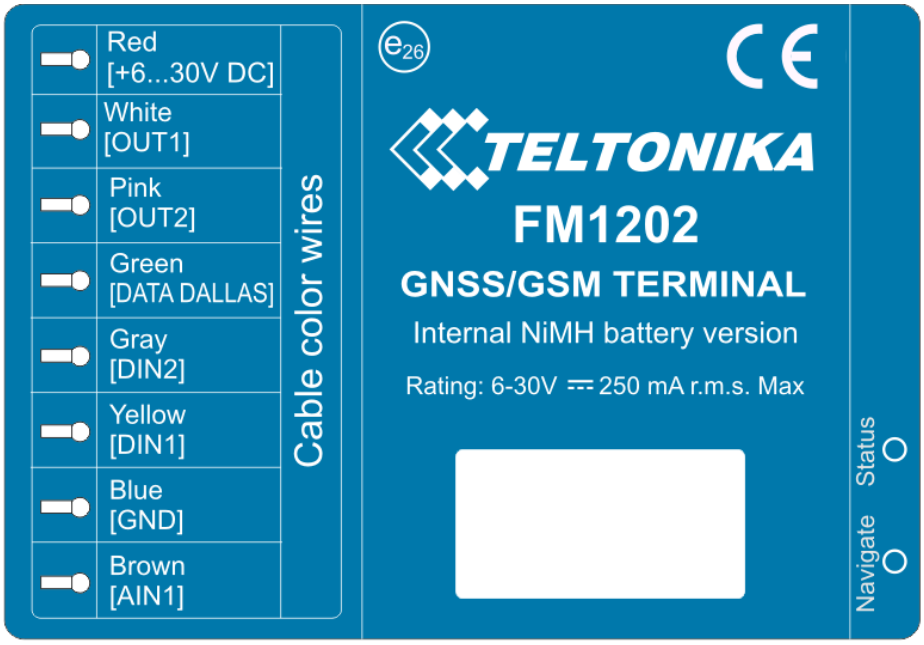

Figure 5. FM1202 sticker

3.6 USB connection

For connecting FM1202 device to PC, special USB cable is used. On one side of the cable there is usual USB plug, which should be connected to PC. Other side of the cable has connector to connect with FM1202. Cable can be connected after removing cover of FM1202:

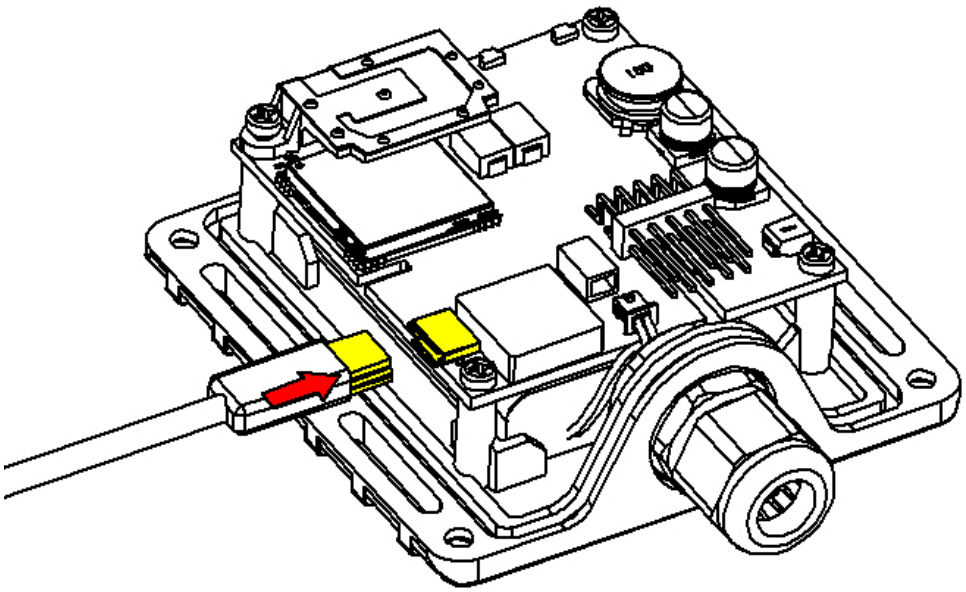

Figure 6. USB cable connection to the FM1202 device

Please note that FM1202 device must be connected to the power supply before it can be connected to the PC!

When FM1202 is connected to PC, it creates an STM Virtual COM Port, which can be used as a system port (to flash firmware and configure the device):

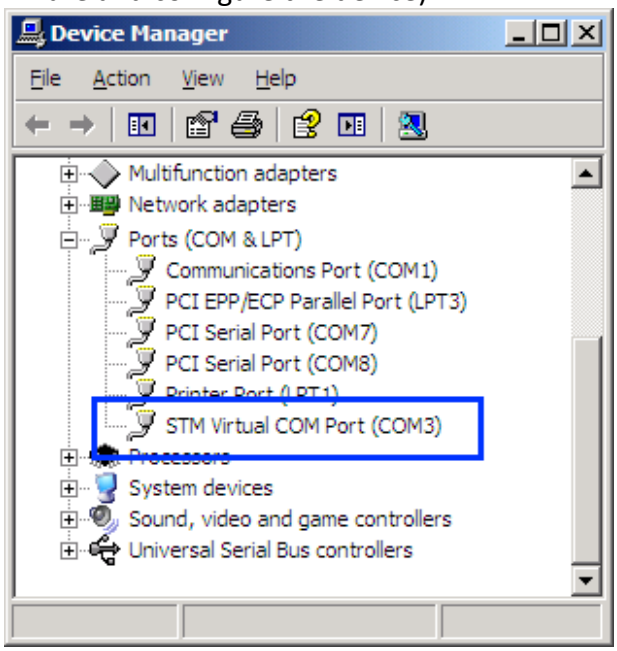

Figure 7. COM-Ports

3.7 Accessories

Note: Teltonika does not provide any additional equipment like panic buttons, door sensors or others.

1 – Wire devices

One of the realized features FM1202 is 1-Wire® data protocol, which enables connection of thermometer (DS1820, DS18S20 and DS18B20) and I-Button type: DS1990A (Figures 8 and 9 show FM1202 and 1-wire® device connection schemes). For additional information please refer to the 1-Wire Design Guide document.

Note that FM1202 devices supports temperature sensors in *parasitic* mode! In this particular mode temperature sensor is connected without use of 1Wire power:

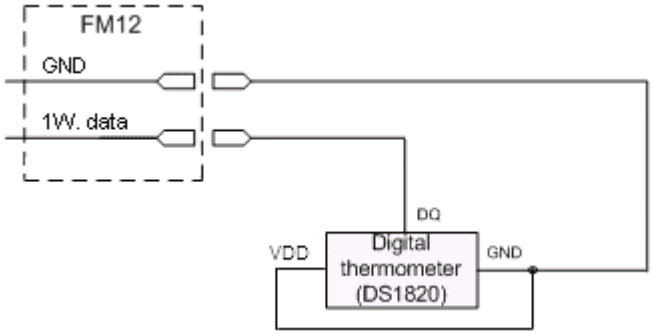

Left row of pins

1W. PWR must be connected to GND pin 3	1
1W. Data (FM1202 – Green wire)	2
GND (FM1202 – Blue wire)	3
Digital Input	4

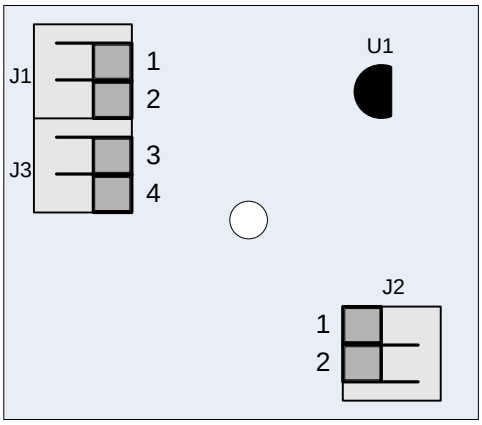

Right row of pins

1	Vpp (+5 Volts DC) – power source for external digital sensor
2	Output from external digital sensor

Figure 8. Digital thermometer DS1820 and TTJ100 connection scheme

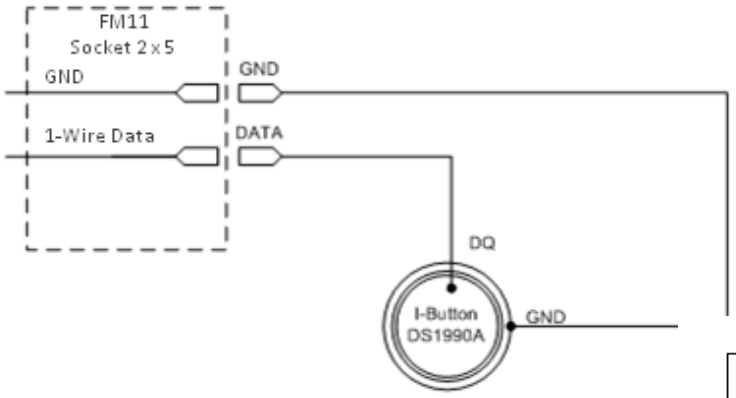

Figure 9. I-Button DS1990A connection scheme

Fuel Tank sensors

A fuel tank level sensor exists in most cars, which shows the approximate fuel level in the driver's indicator panel. It is possible to connect FM1202 Analog input to it (if sensor returns analogue signal proportional to fuel level). Figure shows the connection scheme to the FM1202 and

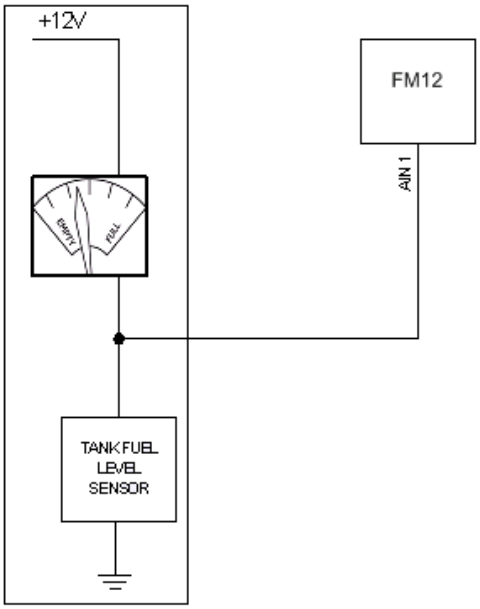

fuel tank sensor. After the connection to the tank fuel level sensor, calibration is needed. Calibration is needed because most fuel tank sensors are not linear. Calibration is performed by measuring voltage dependence on volume of fuel in tank.

Alarm buttons, door sensors, etc.

Alarm buttons, door sensors, ignition, etc. return two states: high or low voltage. Digital inputs are used to read this information. Figure below shows how to connect alarm button, door sensor, etc.

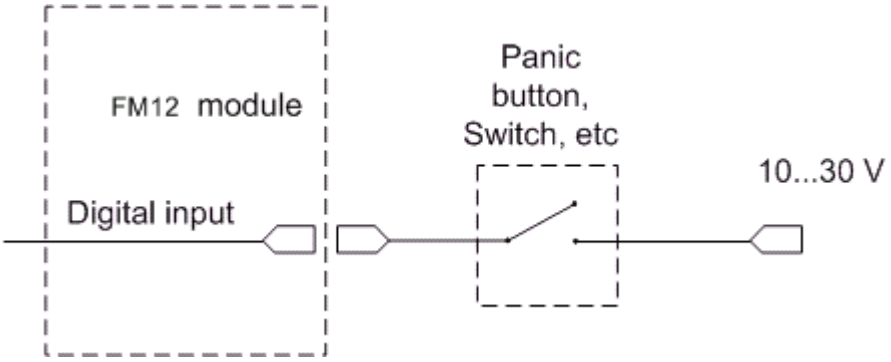

Figure 10. Panic button connection

In cases when sensor output signal is negative, an additional relay has to be installed to convert negative signal to positive.

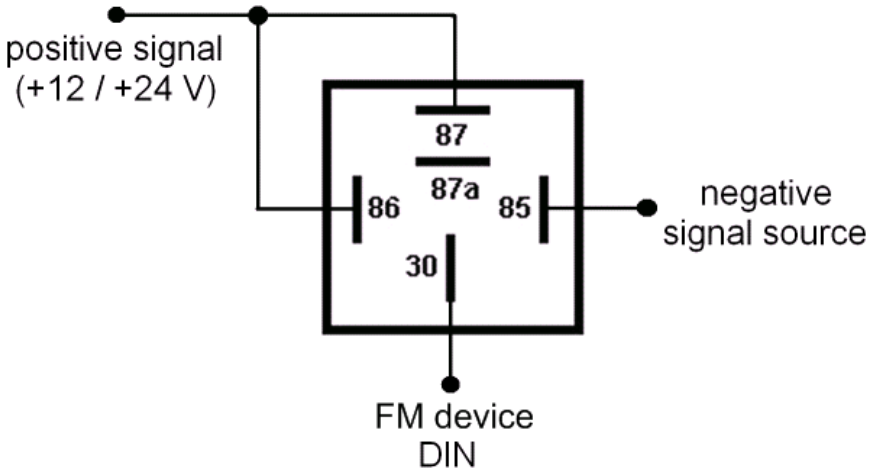

Figure 11. Inverting relay connection

Immobilizer relay

When connected as shown below, FM1202 disables engine starter when output is OFF. More details about relays can be found below.

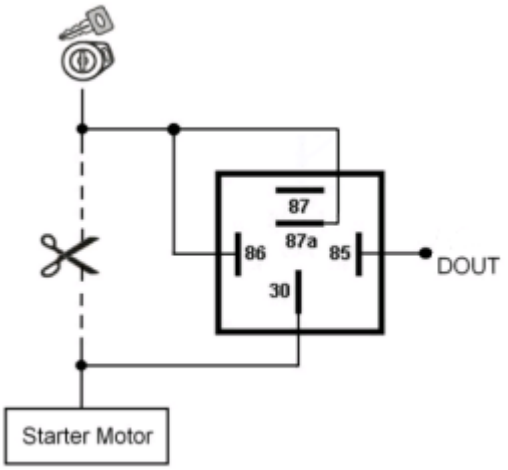

Figure 12. Immobilizer relay connection

Relays

An ordinary automotive relay is used to invert input signal or to immobilize engine starter. Note, that they are available as 12 V or 24 V.

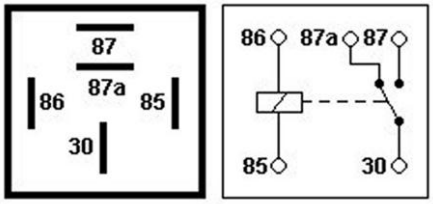

Figure 13. Automotive relay pinout

4 FIRMWARE

4.1 Updating firmware using USB cable

FM1202 functionality is always improving, new firmware versions are developed. Current module firmware version can be retrieved from Configurator. See configuration description for details.

Contact sales manager to get the latest firmware.

Connect FM1202 to PC with the USB cable. Launch “Firmware Updater”, select COM port to which device is connected, click connect, and when IMEI and Firmware version fields are filled, start the update. Device needs some time to send IMEI and Firmware version, so do not be afraid if IMEI will not show up immediately, disconnect and after 1-2 minutes try to connect again. Update process may take up to several minutes.

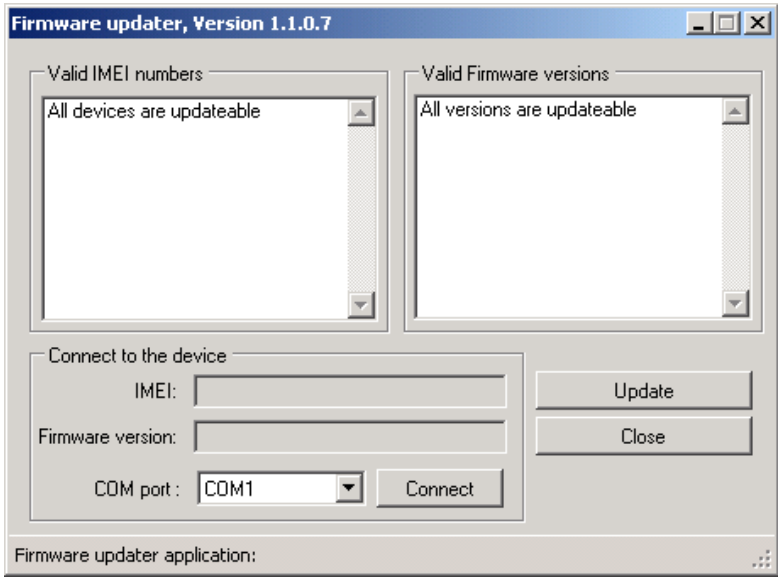

Figure 14. FM1202 firmware updater screen

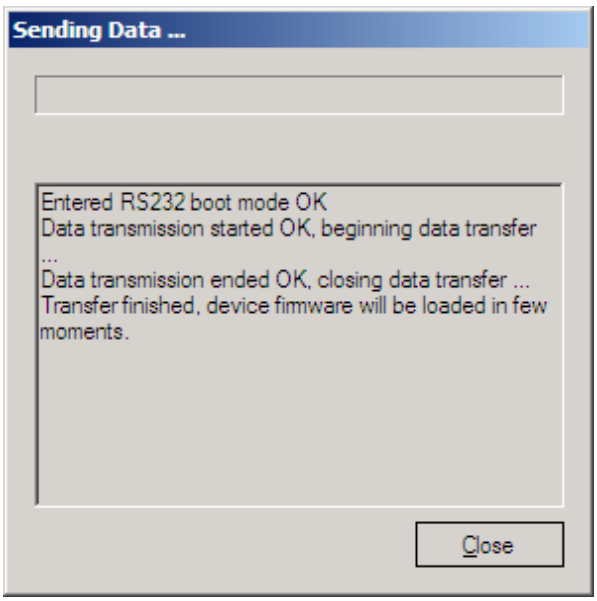

Figure 15. FM1202 firmware updating finished

When you see a table like in Figure 15, it means that the firmware is flashed to FM1202 successfully. You may now close the update window and start using your FM1202 device.

5 OPERATIONAL BASICS

5.1 Operational principals

FM1202 module is designed to acquire records and send them to the server. Records contain GPS data and I/O information. Module uses GPS receiver to acquire GPS data and is powered with three data acquire methods: time-based, distance-based and angle-based method. Note, that if FM1202 loses connection to GPS satellites, it continues to make records, however coordinate in these records remains the same (last known coordinate). Method's details are described in section 5.13. All data is stored in flash memory and later can be sent via GPRS or

SMS. GPRS mode is the most preferred data sending mode. SMS mode is mostly used in areas without GPRS coverage or GPRS usage is too expensive.

GPRS and SMS settings are described in later sections. FM1202 communicates with server using special data protocol. Data protocol is described in “FMXXXX Protocols” document.

FM1202 can be managed by SMS commands. SMS Command list is described in SMS COMMAND LIST section. Module configuration can be performed over TCP or via SMS. Configuration parameters and modes are described in “FMXXXX Protocols” document.

5.2 Sleep modes

5.2.1 Sleep mode

FM1202 is able to go to Sleep mode after configurable Sleep timeout. This timeout (defined period) starts counting when device is in STOP mode. After timeout is reached and all conditions for sleep mode are met, device goes to sleep mode. While in sleep mode, FM1202 turns GPS module off and it is not making new periodic records. Only event records is being recorded with last known coordinate and sent to AVL server. As a result power usage decreases allowing saving vehicle battery.

FM1202 can enter sleep mode if **ALL** of these conditions are met:

- FM1202 has to be configured to work in Sleep mode and Sleep timeout is reached;
- Device must be synchronized time with GPS satellites;
- No movement by movement sensor is detected;
- Ignition (DIN1) is off;

FM1202 exits sleep mode when if **ONE** of following conditions are true:

- Movement by movement sensor is detected;
- Ignition (DIN1) is turned on;

5.2.2 Deep Sleep mode

While in deep sleep mode, FM1202 sets GPS receiver to sleep mode and turns off GSM/GPRS module (it is not possible to wake up device via SMS). Despite records with last known coordinate are being saved and send to AVL server (GSM/GPRS module is turned on to send data and after that it is turned off again), power usage is decreased to save vehicle’s battery. Note, that power saving depends on two configurable parameters: send period and min. record saving period.

FM1202 can enter deep sleep mode if **ALL** of these conditions are met:

- FM1202 has to be configured to work in Deep Sleep mode and Sleep timeout set;
- Device must be synchronized time with GPS satellites;
- No movement by movement sensor is detected;
- Ignition (DIN1) is off;
- Min. Record Saving Period (Data Acquisition Mode settings) must be bigger than Active Data Link Timeout parameter, that FM1202 could close GPRS link.
- Send period (Data Acquisition Mode settings) minus Active Data Link Timeout must be more than 90 sec., that FM1202 could close GPRS link for at least 90 sec.
- USB cable is not connected.

FM1202 exits deep sleep mode when if **ONE** of following conditions are true:

- Movement by movement sensor is detected;
- Ignition (DIN1) is turned on;
- USB cable is connected;

Note: In order to save GPRS traffic records saved in deep sleep mode do not contain below listed I/O elements information:
PDOP, HDOP, Odometer, Speedometer, iButton ID, Cell ID, Area Code, Temperature and GPS power

5.3 Virtual odometer

Virtual odometer is used to calculate traveled distance in FM1202 as a separate I/O element. When FM1202 detects movement, it starts counting distance using GPS signal: every second it checks current location and calculates distance between current and previous point. It keeps adding these intervals until it is time to make a record, then FM1202 records its location and adds odometer value, which is equal to the sum of all distances, measured every second. When record is made, odometer resets to zero and distance calculation starts all over again.

Virtual odometer as an I/O element can be also used with Trip feature, read chapters 5.4.2 and 5.14.2 for more details.

5.4 Features

Using available features can greatly increase FM1202 usability options.

5.4.1 Scenarios

Four scenarios are available on FM1202 device.
Digital Output No.1 is used by scenarios - Green Driving **or** Over Speeding;
Digital Output No.2 is used by scenarios - Authorized Driving **or** Immobilizer.

Green Driving Scenario. Helps to prevent and inspect driver about harsh driving. Scenario continuously monitors: accelerating force, braking force and cornering angles. Warns driver if needed. DOUT1 is controlled by scenario for user needs, for example buzzer or LED.

To save GPRS traffic Green Driving **event** will be **generated (included into sent records) only** when FM1202 measured values are higher than those set in configuration, without additional I/O settings.

To prevent generating false events, harsh acceleration and harsh braking is monitored only when following conditions are fulfilled:

- Ignition is ON (DIN1 = 1)
- Vehicle speed is equal or higher than 10km/h

Harsh cornering is monitored only when following conditions are fulfilled:

- Ignition is ON (DIN1 = 1)
- Vehicle speed is equal or higher than 30km/h

Note: Green Driving Scenario is a factor on various cars and various drivers testing phase and can be subject to changes. Teltonika is constantly working on improvement of the functionality of the devices, and strongly recommends using the latest version of the firmware.

Over Speeding Scenario. Helps to prevent from exceeding fixed speed and inspects driver if needed. DOUT1 is controlled by scenario for user needs, to manage buzzer, LED, etc.

Authorized Driving Scenario. Gives ability to use vehicle only for 50 specific iButton owners (specified in iButton list). DOUT2 is controlled by scenario for user needs, to manage buzzer, LED, etc.

Note: In order for Authorized driving to work properly, at least 1 iButton ID must be written to the iButton list.

Immobilizer Scenario. Vehicle can be used only if iButton is connected. In this scenario iButton list is not used; connect any iButton to pass Immobilizer security. DOUT2 is controlled by scenario for user needs, to manage buzzer, LED, etc.

5.4.2 Trip

Trip customizable feature enables user extended monitoring of performed trips (from engine start at present location to engine stop at arrived location), log their start and stop points, view driven total distance[3]. Event will be **generated (included into send records) only** when trip starts and finishes.

Note: Scenarios and Trip features are activated (DOUTs are activated) only if DIN1=1 (ignition is on).

5.4.3 Geofencing

Geofencing is another feature which is highly customizable and can detect wherever car enters or leaves customized areas. More about Geofencing can be read in 5.14.3 chapter.

Auto Geofencing feature if enabled is activated automatically by turning off car ignition. Next time before driving user has to disable Auto Geofencing with iButton or by turning on car ignition. In case of theft car leaves Auto Geofencing zone without authorization FM1202 device automatically sends high priority record to AVL application.

[3] Continuous odometer – total driven distance, works only in TRIP mode. Continues distance is counted only for ONE trip. If trip is finnished (stop point is detected), odometer resets to 0 (zero). Next trip will start counting from the begining.

5.4.4 iButton list

iButton list is used to enter authorized iButton ID codes, which are used to authenticate driver in Authorized driving and Auto Geofencing options.

5.5 CONFIGURATION

5.6 Configurator

New FM1202 module has default factory settings. Settings should be changed according to your application and your GSM operator information.

FM1202 configuration is performed via FM1202 Configurator program. FM1202 Configurator version can be downloaded from http://avl1.teltonika.lt/downloads/FM12/. Contact sales manager to get the latest FM1202 Configurator version. FM1202 configurator operates on Microsoft Windows OS and uses MS .Net Framework 3.5 or higher. Please ensure that MS .Net Framework 3.5 or later is installed on your PC before starting configurator. Latest MS .Net Framework version can be downloaded from official Microsoft web page.

Module configuration is performed over USB cable. Configuration process starts from starting FM1202 Configurator program and then connecting to FM1202 device via Connect button located on the top left corner of configurator. If connected successfully IMEI, Version fields which were empty, now are filled with certain numbers depending on Modem IMEI and firmware version of your device (figure below).

FM1202 has one user editable profile, which can be loaded from device, and saved. User can also revert to default settings, by pressing Load Defaults button. After any modification of configuration settings it has to be saved to FM1202 device, otherwise it will not be written to device.

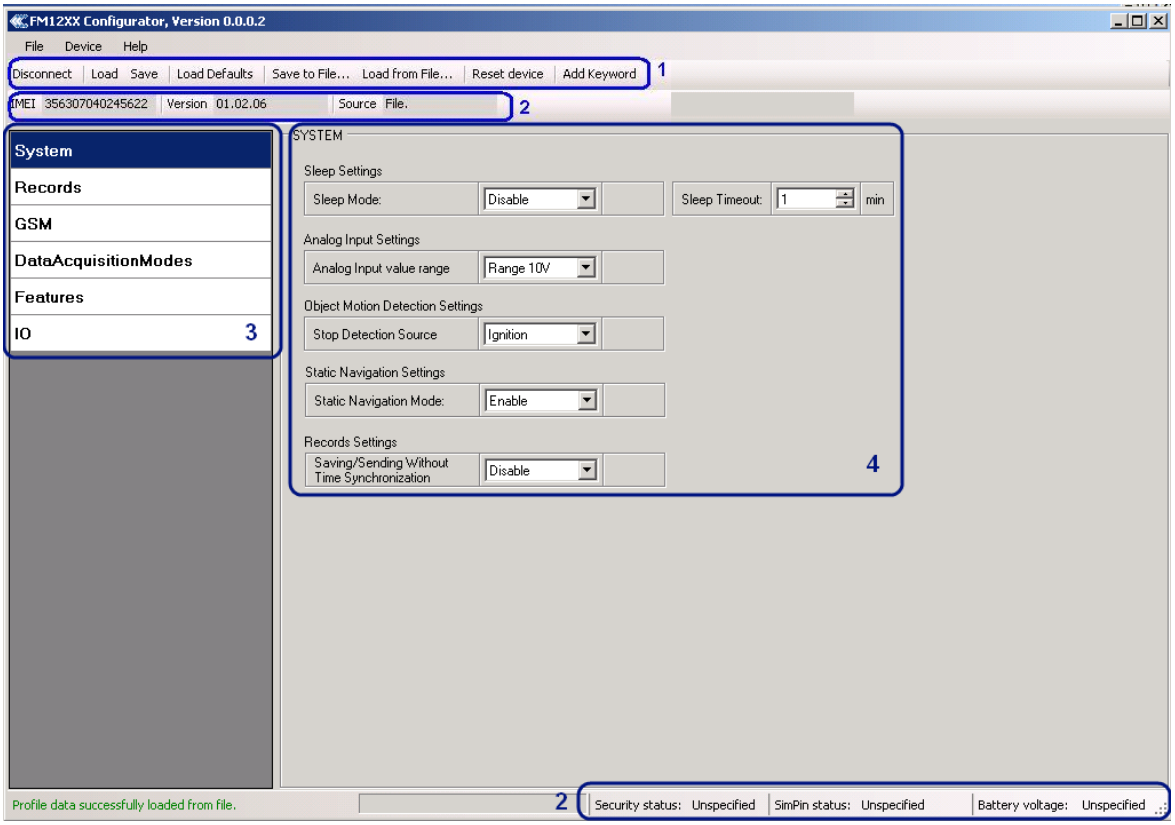

Figure 16. Configurator window (update)

FM1202 Configurator is divided into 4 main areas: 1 – main button area, 2 – information area, 3 –settings menu, 4 – parameters and values menu.

Button description:

'Connect' – connects device

'Load' – reads configuration parameters from FM1202 Flash memory.

'Save' – saves configuration parameters to FM1202 Flash memory.

'Load Defaults' – loads default FM1202 settings that later can be modified. This procedure must be performed before entering new parameters.

'Save to File…' – allows user to save currently entered settings to .XML file, for later usage.

'Load from File…' – allows user to load configuration saved in .XML extension file.

'Reset device' – reboots FM1202 and displays processor firmware version.

'Add Keyword' / 'Change Keyword' / 'Switch Security Off'– buttons are used to protect configurator from unauthorized access to configuration.

Keyword is 4 – 10 symbol length. If keyword is set, every time user reconnects FM1202 to USB port, user will be asked to provide valid keyword when connecting FM1202 to configurator. User is given 5 attempts to enter keyword. After entering valid keyword, counter resets to 5.

If user disconnects FM1202 using 'Disconnect' button and does not disconnect from USB port, after reconnecting using 'Connect' button, configurator does not ask for keyword.

ATTENTION! If you have entered a keyword, disconnected from the configurator and then later connected again, you will need to enter the keyword that you have entered previously. If you have forgotten it, please contact your local sales manager.

5.7 Read records

When the FM1202 is working in offline mode, it can save up to 100,000 records. Since these records are not sent to the server, they can be downloaded directly to connected computer using USB connection. When you connect FM12 device, FM12XX Configurator appears with additional option "Read Records" (Fig. 2).

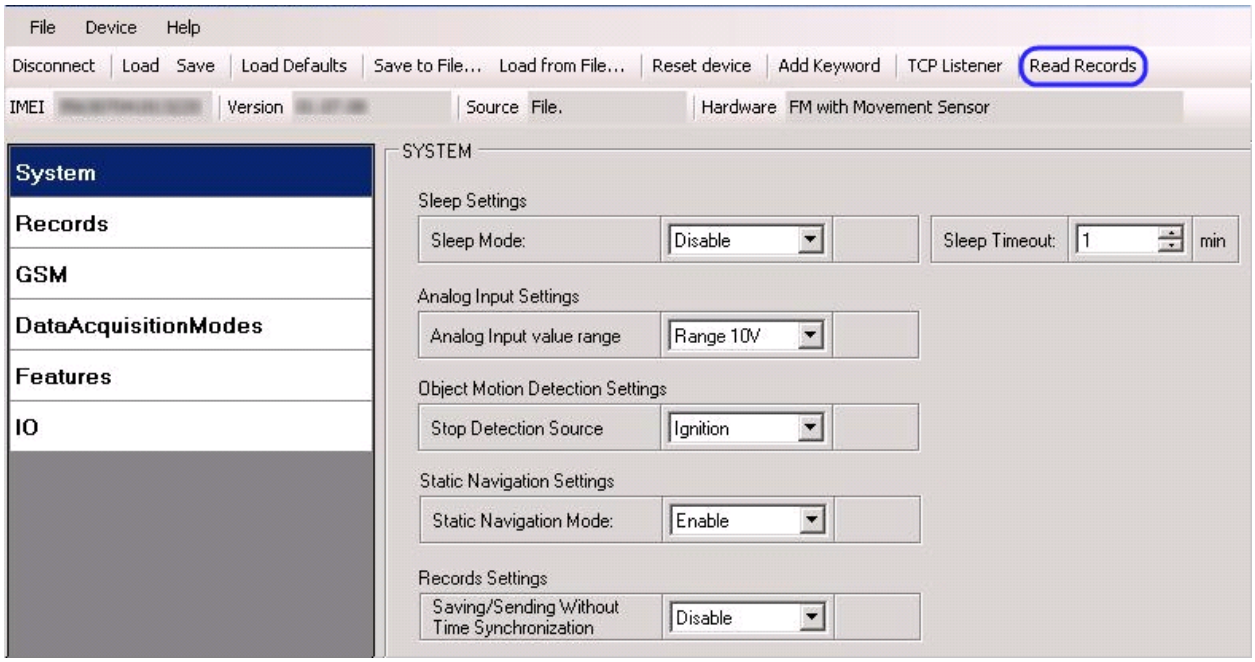

Fig. 2 FM12XX Configurator window with FM12M connected

After device is switched on, you have to wait 3 minutes for device to startup. Only then it is possible to download records. If the memory is fully filled, the records reading may take several minutes. After reading records, all records are deleted from the device memory. Data records are stored in a binary file on your PC. You can upload these records from file to TAVL server and access all the data from TAVL.

TAVL client application lets user to use the following features:

- Import data file saved from the device to the TAVL;
- Preview track of the imported data;
- Generate reports of the imported data.

More details on how to use TAVL application please refer to "TAVL3 application user manual v1.4" documentation or its later versions.

FM1202 can still be configured to acquire and send data to server. It will be possible to store up to 100'000 data records if GSM is not available at the moment. It will send data later when GPRS is available again. Note that FM1202 can have memory full of records. In such a case it will start deleting oldest records in order to save new ones. Sending all the data records to server may take some time. Sending 100'000 records for FM1202 may take for about 21 hour (exact time may differ depending on GPRS/server load).

5.8 System settings

System settings have 4 configurable parameters:

- Deep sleep settings, where user can turn deep sleep on or off
- Analog Input Settings, where user can choose analog input range 10 V or 30 V, depending on needed accuracy (lower range gives higher accuracy of measurements), and input voltage
- Object Motion Detection Settings, where user can configure 3 ways how FM1202 will detect stopped movement, and change its working mode (for working modes, read section 5.13)
- Static navigation settings, where user can turn static navigation on or off

Stop Detection Source	Vehicle on Stop mode	Vehicle Moving mode
Ignition (recommended)	If ignition (DIN1) is logic low	If ignition (DIN1) is logic high
Msensor (movement sensor)	Internal movement sensor does not detect movement	Internal movement sensor detects movement
GPS	GPS fix is available and vehicle speed is lower than 5 km/h	GPS fix is available and vehicle speed is higher than 5 km/h
	While GPS fix is unavailable, Object Motion Detection Settings are working like in Msensor mode	

Static Navigation Mode is a filter, which filters out track jumps when the object is stationary. If Static navigation filter is disabled, it will apply no changes on GPS data. If Static navigation filter is enabled, it will filter changes in GPS position if no movement is detected

(depends on Object Motion Detection Settings). It allows filtering GPS jumps when object is parked (is not moving) and GPS position is still traced.

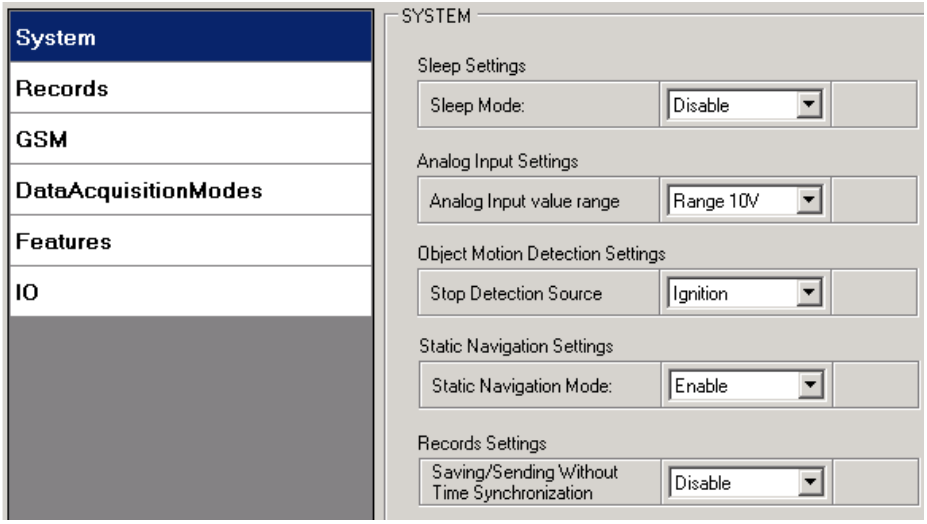

Figure 17. System settings configuration

5.9 Records settings

Here user can modify if FM1202 device will send newest records first, meaning, that the most important thing is to know recent position of car, older records are being sent right after newest records arrive to AVL application.

Activate Data Link Timeout is used to set timeout of link between FM1202 and AVL application termination. If FM1202 has already sent all records it waits for new records before closing link. If new records are generated in the period of this timeout, and minimum count to send is reached, they are sent to AVL application. This option is useful when GSM operator charge for link activation.

Server Response Timeout is used to set time period waiting for response from server side.

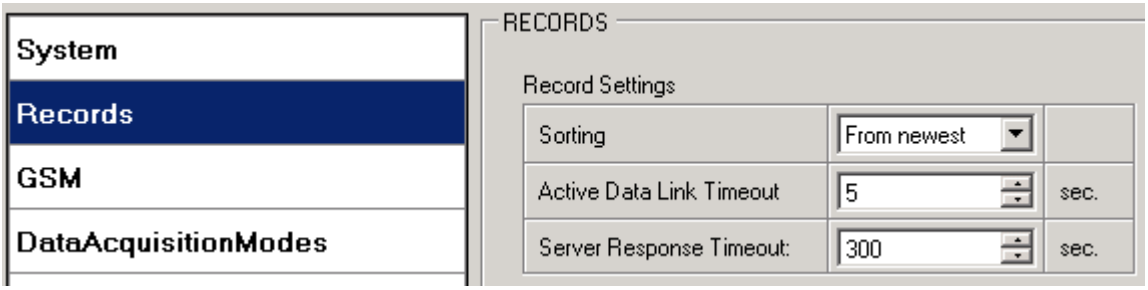

Figure 18. Records settings configuration

5.10 GSM settings, GPRS part

'GPRS' defines main parameters for FM1202: GSM operator APN and GPRS username and password (optional – depending on operator), destination server IP and port, and allows to set protocol used for data transfers – TCP or UDP

Some operators use specific authentication for GPRS session – CHAP or PAP. If any of these is used, APN should be entered as '`chap:<APN>`' or '`pap:<APN>`'. I.e. if operator is using APN 'internet' with CHAP authentication, it should be entered as '`chap:internet`'. Information about APN and authentication type should be provided by your GSM operator.

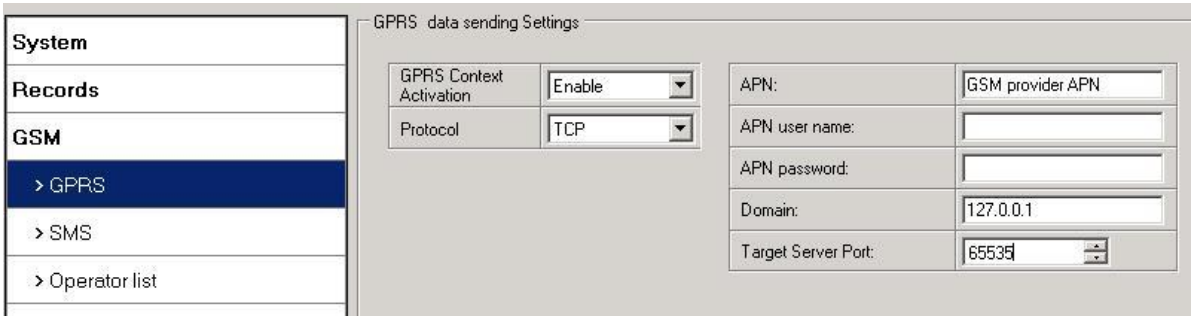

Figure 19. GPRS configuration

5.11 GSM settings, SMS part

Essential fields in 'SMS' part are 'Login' and 'Password'. The login and password are used with every SMS sent to FM1202. If login and password are not set, in every SMS sent to FM1202 device two spaces before command have to be used (<space><space><command>).

Command structure with set login and password:

<login><space><password><space><command>, example: "asd 123 getgps"

Phone numbers have to be written in international standard, without using "+" or "00" signs in prefix. If no numbers are entered, configuration and sending commands over SMS are allowed from all GSM numbers.

SMS data sending settings – enable or disable **periodic** data and event SMS usage. This setting does not affect replies to SMS request messages – answers are always sent back to sender telephone number.

FM1202 can send binary SMS with 24-coordinates-in-one-SMS. It is used in areas where no GPRS coverage is available. Module collects data and sends to server binary SMS containing information about last 24 collected points. SMS sending schedule is set in SMS Week Time tab. 24-Coordinates SMS decoding is described in "FMXXXX Protocols" document.

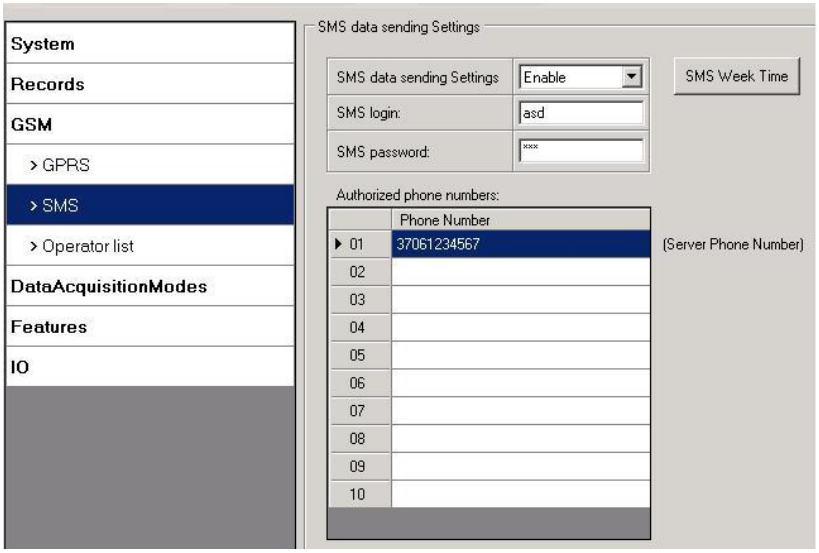

Figure 20. SMS configuration

Note: A mobile phone will not understand and SMS with binary code, so sending it to a mobile phone is useless. When sending a binary SMS to a phone number, which is a server phone number, the server can interpret and understand binary code, so the data can be read and you can view it on the server.

SMS login and password and authorized number list are used to protect FM1202 module from unauthorized access. Module accepts messages only from a list of authorized numbers and with proper module login and password. Numbers must be without "+" or "00" prefix. If no authorized numbers are entered, module accepts messages from all numbers.

5.12 GSM settings, Operator list

Operators list – FM12 can work in different modes (use different settings) according to the operator list defined. Operator list is used for Data Acquisition Mode switching (see chapter 5.13 Data Acquisition Mode settings for more details). Modes are changed based on GSM operator FM12 is connected to.

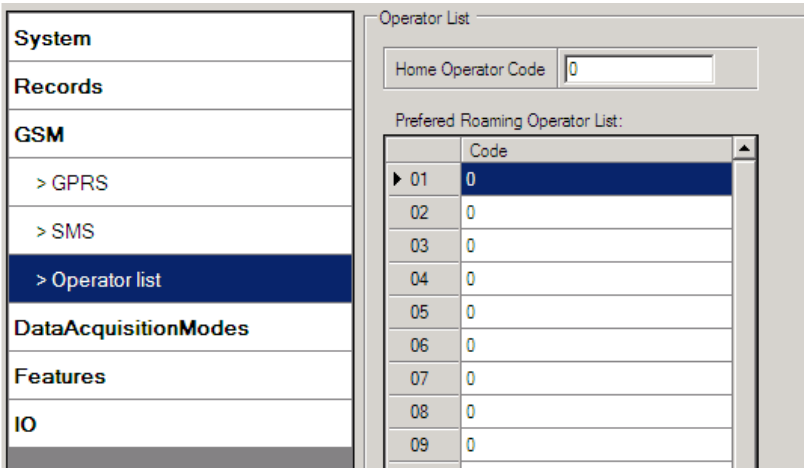

Figure 21. Operator list configuration

If operator list is left empty, it will allow using GPRS to any GSM operator. Please note that FM1202 will work in **Unknown mode only** (make sure it is configured to allow data sending – GPRS context is enabled).

5.13 Data Acquisition Mode settings

Data Acquisition Modes are an essential part of FM1202 device, it is also highly configurable.

By configuration user defines how records will be saved and sent. There are three different modes: Home, Roaming and Unknown. All these modes with configured data acquisition and send frequencies depend on current GSM Operator defined in Operator list (see section 5.12) and are switched when GSM operator changes (e.g. vehicle passes through country boarder).

If current GSM operator is defined as Home Operator, device will work in Home Data Acquisition mode, if current operator is defined as Roaming Operator, device will work in Roaming Data Acquisition mode, and if current operator code is not written in Operator list (but there is at least one operator code in the operator list), device will work in Unknown Acquisition mode.

This functionality allows having different AVL records acquire and send parameters values when object is moving or stands still. Vehicle moving or stop state is defined by Stop Detection Source parameter. There are 3 ways for FM1202 to switch between Vehicle on Stop and Vehicle Moving modes see section 5.7.

FM1202 allows having 6 different modes. Operational logic is shown in Figure 22.

If there are no operator codes entered into operator list, FM1202 will work in Unknown network mode ONLY.

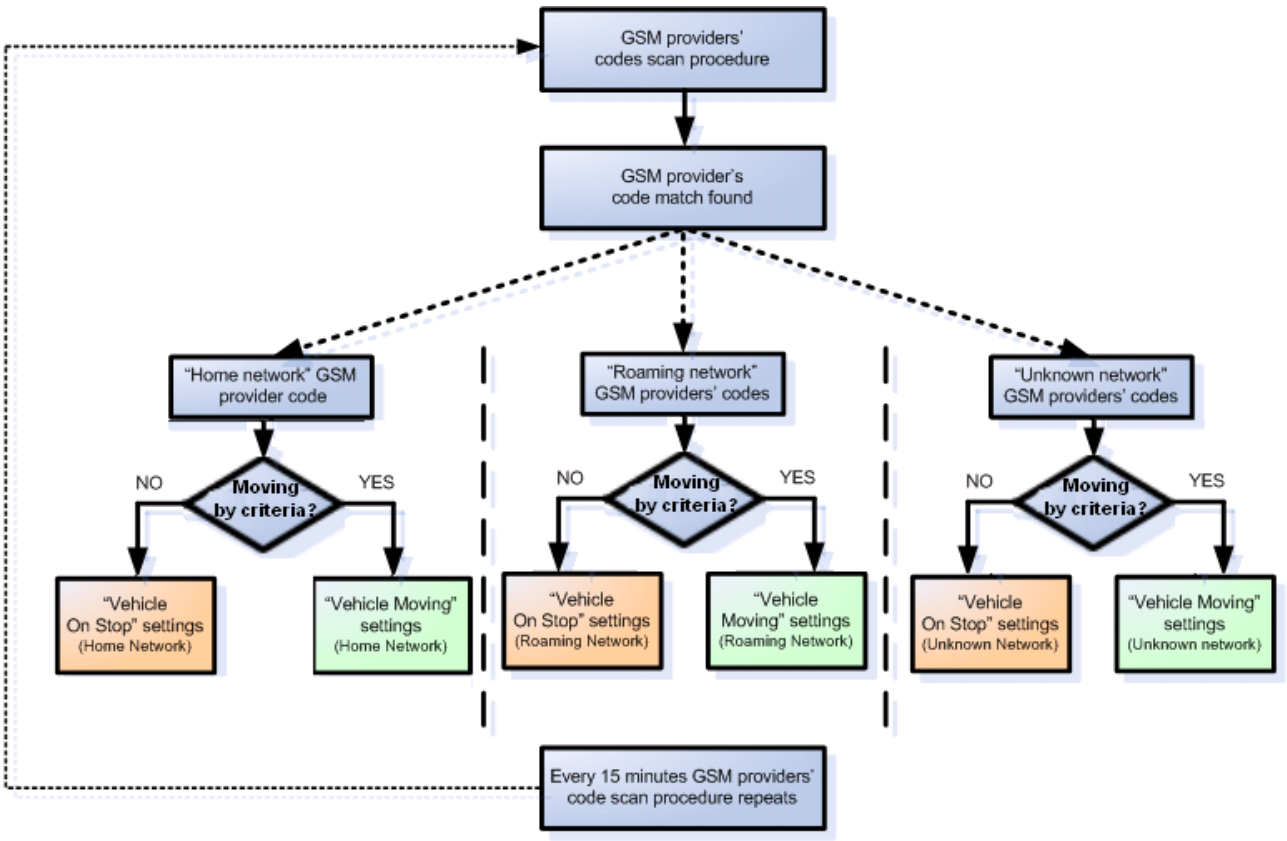

Figure 22. Data Acquisition Mode configuration

Operator search is performed every 15 minutes. Depending on current GSM operator, Home, Roaming or Unknown mode can be changed faster than every 15 minutes. This process is separate from operator search. Movement criteria are checked every second.

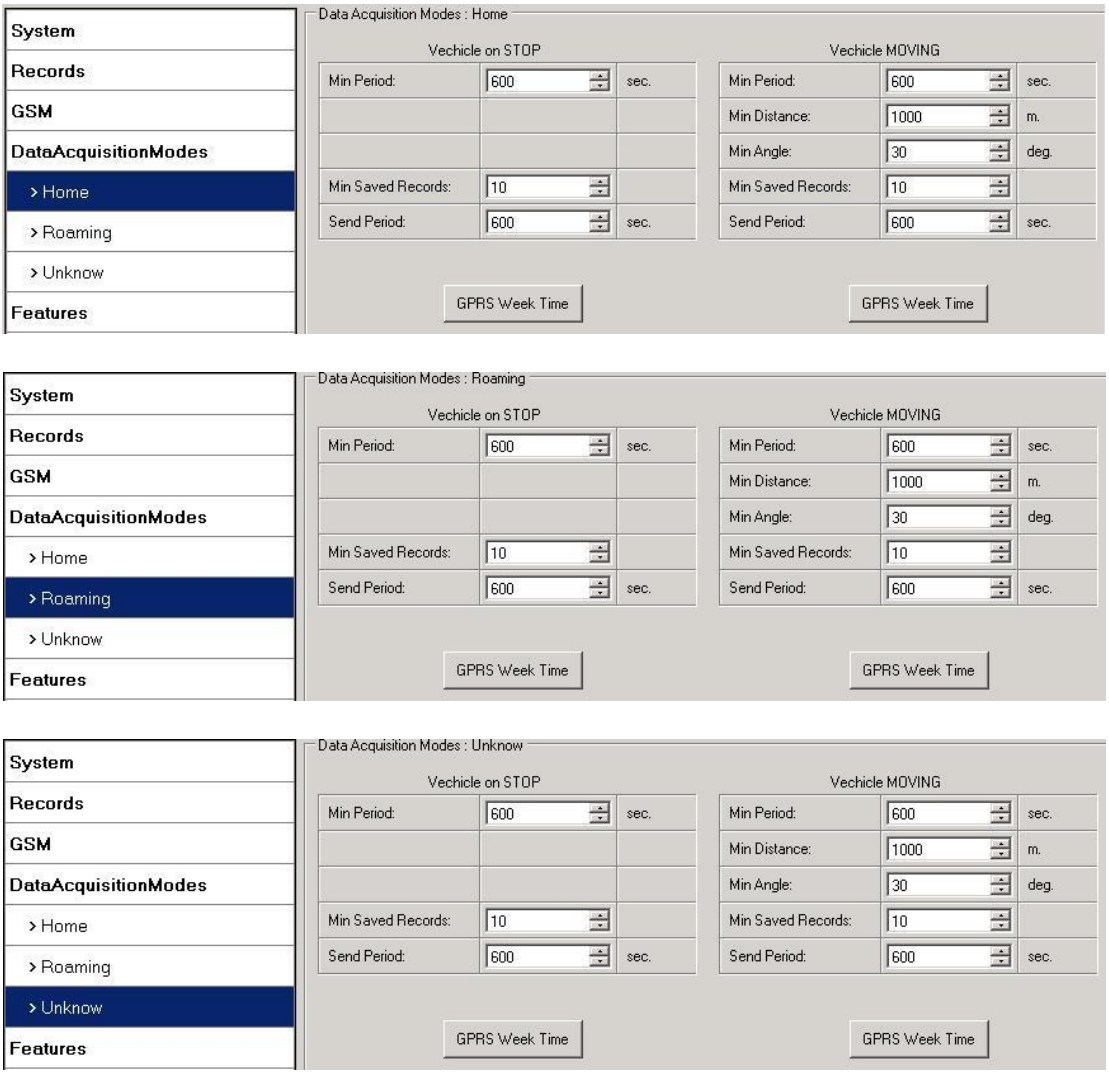

Figure 23. Data Acquisition Mode configuration

'Min Saved Records' defines minimum number of coordinates and I/O data that should be transferred with one connection to server. If FM1202 does not have enough coordinates to send to server, it will check again after time interval defined in 'Sending Period'

Send period – GPRS data sending to server period. Module makes attempts to send collected data to server every defined period. If it does not have enough records (depends on parameter Min. Saved Records described above), it tries again after defined time interval.

GPRS Week Time tab – most GSM billing systems charge number of bytes (kilobytes) transmitted per session. During the session, FM1202 makes connection and transmits data to a server. FM1202 tries to handle the session as much as possible; it never closes session by itself. Session can last for hours, days, weeks or session can be closed after every connection in certain GSM networks – this depends on GSM network provider. GPRS Context Week Time defines session re-establish schedule if session was closed by network. New GPRS context is opened if time is 10 minutes till time checked in table. Therefore if all boxes are checked, FM1202 is able to open new connection anytime. At scheduled time match FM1202 checks for GPRS session activity. If GPRS session is alive, FM1202 sends data to server according to Send period parameter. If it is not, FM1202 checks if it is able to re-establish the session.

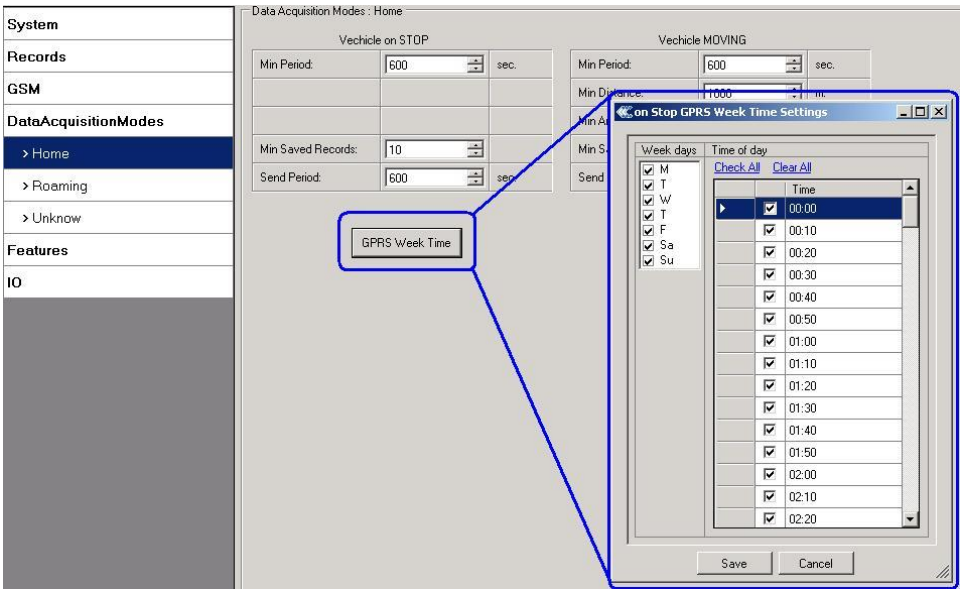

Figure 24. GPRS Week Time configuration

Device checks if the time between last saved record and current time is equal or higher than Time based acquire interval. If so, FM1202 saves record to memory. If not, FM1202 checks if the distance from last record to current record is equal or higher than Distance based acquire interval. If so, saves the record to memory. If not and speed is higher than 10km/h, then FM1202 checks if angle difference between last record and current record is equal or higher than Angle based acquire value. If so, saves the record to memory. These checks are performed every second.

Note: Keep in mind that FM1202 operates in **GMT:0** time zone, without daylight saving.

FM1202 is able to collect records using three methods at the same time: time, distance and angle based data acquisition:

Time based data acquiring (Min. period) – records are being acquired every time when defined interval of time passes. Entering zero disables data acquisition depending on time.

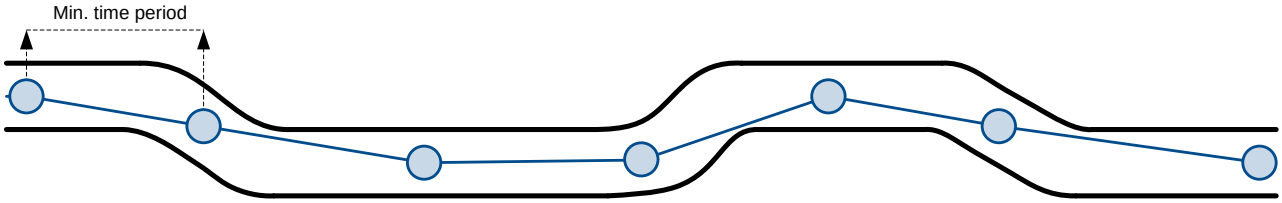

Distance based data acquiring (Min. distance) – records are being acquired when the distance between previous coordinate and current position is greater than defined parameter value. Entering zero disables data acquisition depending on distance.

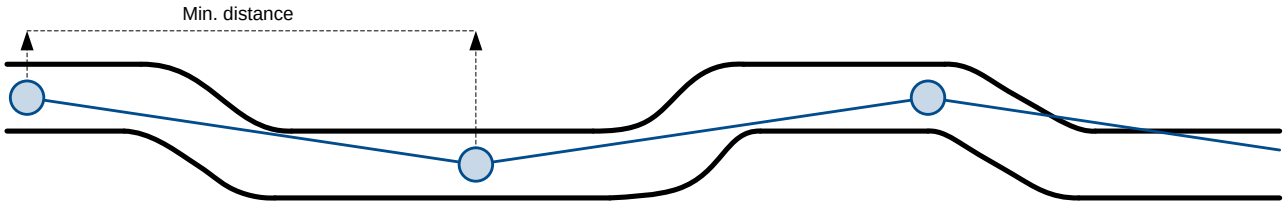

Angle based data acquiring (Min. angle) – records are being acquired when angle difference between last recorded coordinate and current position is greater than defined value. Entering zero disables data acquisition depending on angle.

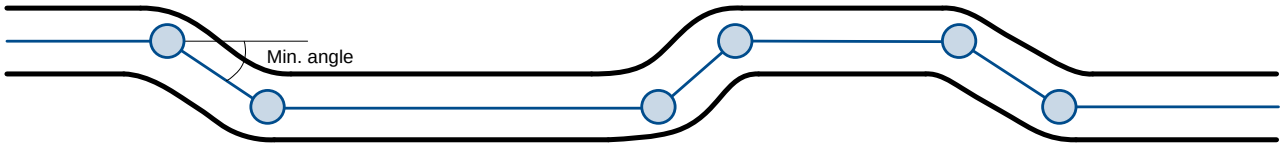

5.14 Features settings

For more information about available Scenarios, Trip, Geofencing and iButton list, refer to 5.4 chapter.

5.14.1 Scenarios settings

In Scenarios window four different scenarios are available, two per each Digital Output (DOUT). Only one per digital output can be active at a same time, e.g. DOUT1 can have either Green driving **or** Over Speeding enabled, DOUT2 can have either Authorized Driving **or** Immobilizer enabled.

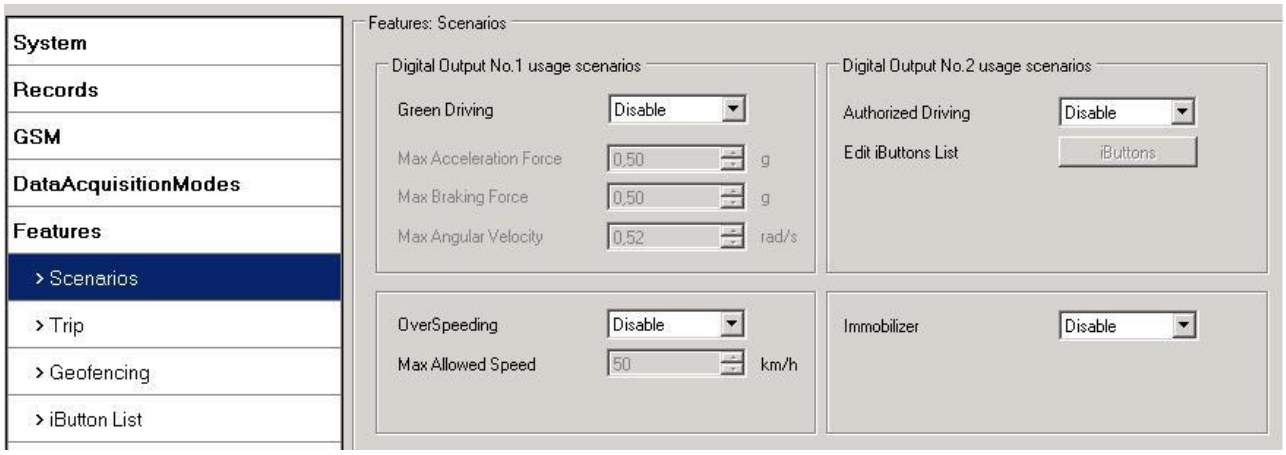

Figure 25. Scenarios configuration

Digital Output (open drain grade) usage in scenarios:

- Green Driving

  DOUT1 is ON for:

  - 3sec. if detected value is over (0; 30] % from preconfigured allowed value
  - 5sec. if detected value is over (30; 50] % from preconfigured allowed value
  - 7sec. if detected value is over (50; -] % from preconfigured allowed value

  After period of time DOUT1 is turned OFF.

- Over Speeding

  DOUT1 is ON, while vehicle speed exceeds parameter value. DOUT1 is activated until current speed decreases below parameter value.

- Authorized driving

  DOUT2 is continuously OFF. Dout2 turns ON if Ignition turns ON (Din1=1). After authorizing iButton (iButton ID is read and it matches the ID from the iButton list), DOUT2 turns OFF. After successful authorization DIN1 (ignition) can be turned OFF (Din1=0) for no longer than 30 seconds, otherwise authorization must be repeated.

- Immobilizer

  DOUT2 is continuously OFF. Dout2 turns ON if Ignition turns ON (Din1=1). After iButton ID is read (any iButton is attached), DOUT2 turns OFF. After iButton identification DIN1 (ignition) can be turned OFF (Din1=0) for no longer than 30 seconds, otherwise immobilizer must be repeated.

5.14.2 Trip settings

Trip window offers user to configure Trip feature. If Trip is enabled configuration of parameters are enabled.

Start Speed – GPS speed has to be greater than the specified Start Speed in order to detect Trip Start.

Ignition Off Timeout – timeout to wait if ignition was off, to detect Trip stop.

Continuous distance counting – Not or Continuous can be chosen. For this feature I/O Odometer must be enabled (see Figure 26).

If I/O Odometer is enabled and Continuous distance counting variable is set to Continuous, **Trip distance** is going to be counted continuously (**from Trip start to Trip stop**). This value is written to I/O Odometer value field. When Trip is over and next Trip begins, Odometer value is reset to zero. When the next trip starts counting continuously starts from the beginning again.

If I/O Odometer is enabled and Continuous Distance Counting variable is set “Not”, then the distance is going to be counted only between every record made. This value is written to I/O Odometer value field and reset to zero every new record until Trip stops. If later all Odometer values are summed up manually, the user gets the distance driven during the whole period of the Trip.

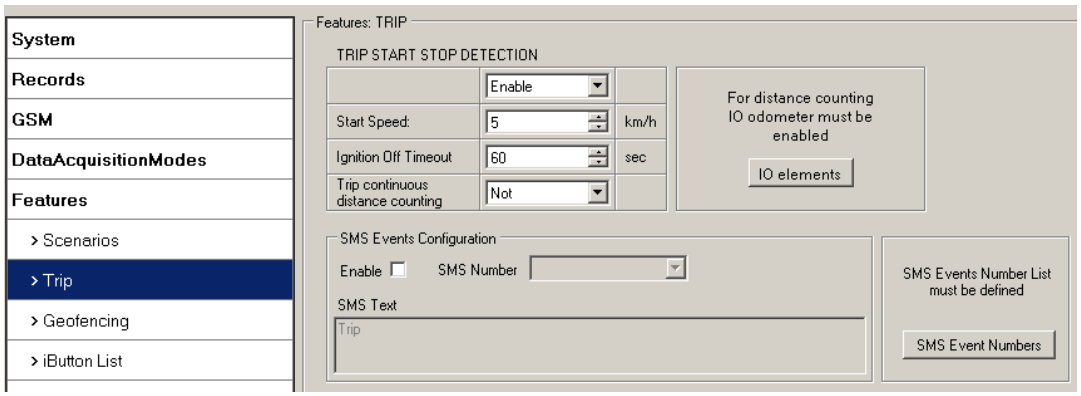

Figure 26. Trip configuration

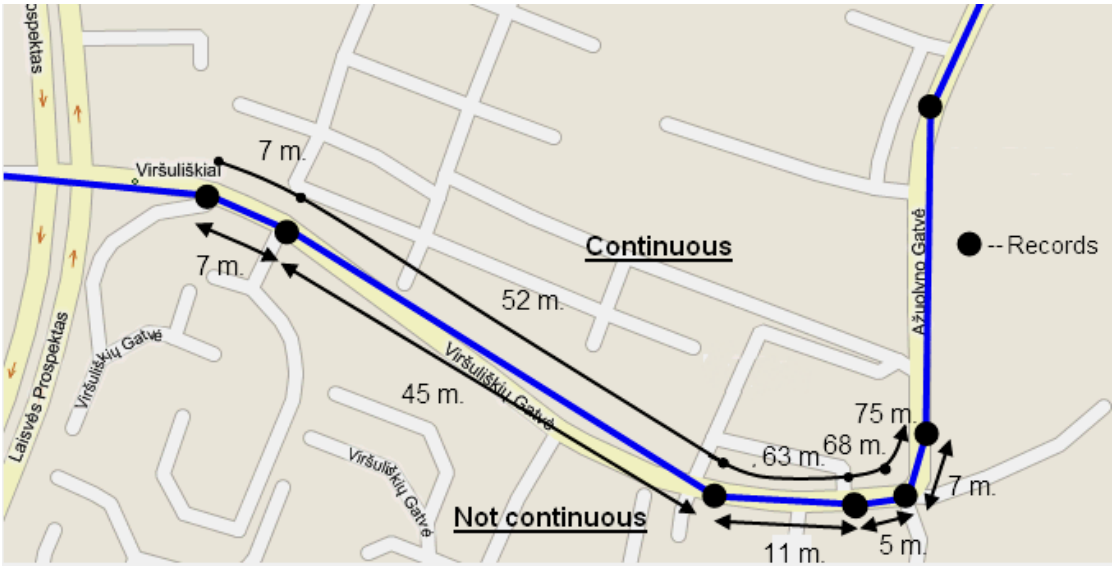

Figure 27. Trip continuous distance counting parameter example

5.14.3 Geofencing settings

FM1202 has 5 configurable Geofence zones and it can generate an event when defined Geofence zone border is crossed.

Frame border – frame border is an additional border around Geofence zone. It is additional area around defined zone used to prevent false event recording when object stops on the border of the area and because of GPS errors some records are made inside area and some – outside. Event is generated only when both borders are crossed. See figure 28 for details: track 1 is considered to have entered the area while track 2 is not.

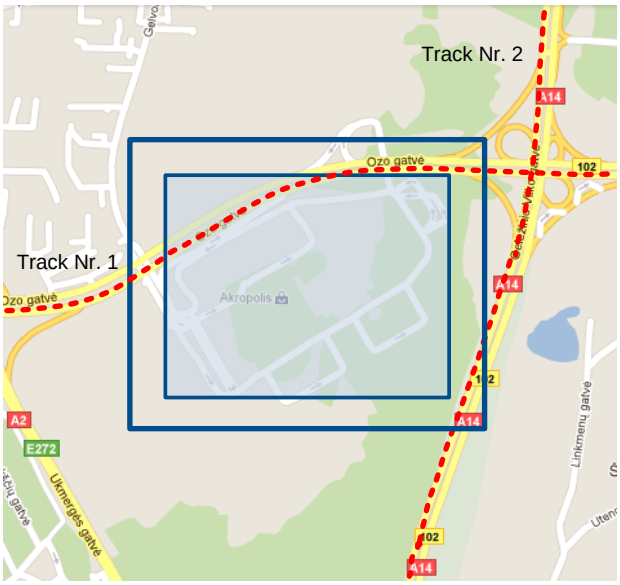

Figure 28. Geofence border

Shape – can be rectangle or circle

Priority – priority of Geofence event: low, high or panic. These levels define priority of event information sending to server. See I/O element description for more details about priorities.

Generate event (On entrance, On exit, On Both) – choose when record will be generated;

X1 – geofence zone left bottom corner X coordinate (longitude);

Y1 – geofence zone left bottom corner Y coordinate (latitude);

X2 or R – geofence zone upper right corner X coordinate (longitude) or radius of circle when Circular zone is used (radius in meters);

Y2 – geofence zone upper right corner Y coordinate (latitude);

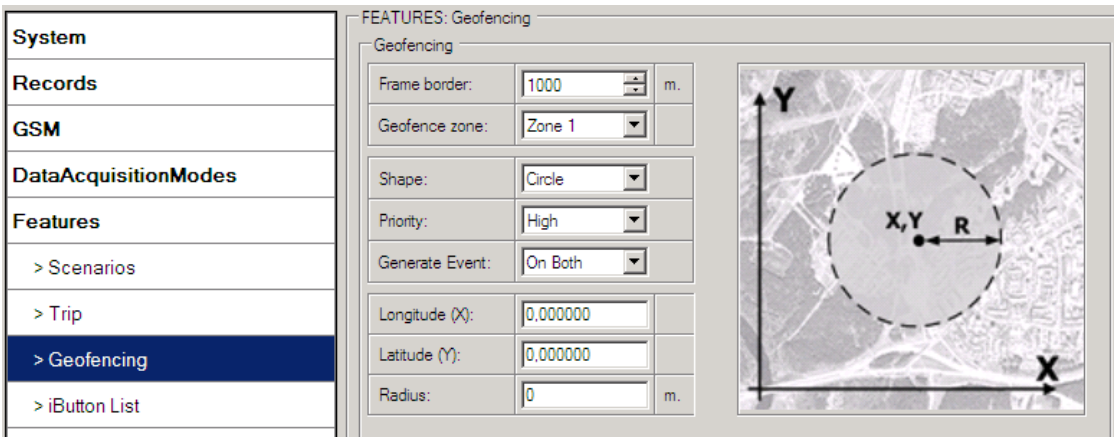

Figure 29. Geofence configuration

AutoGeofencing settings

AutoGeofence – the last known position after movement = off. If your car's being taken away – you can be notified. The shape and size of the geofence zones are parameters. It is possibility to state whether entering in or out of the geofence triggers an asynchronous message.

AutoGeofencing option can be configured by following parameters visible in figure 30 below.

Activate – Enable or Disable AutoGeofence functionality.

Activation TMO – Time period before Geofence is activated after vehicle stops.

Deactivate By:

Ignition – If ignition becomes high it will disable AutoGeofenze Zone.

iButton – if iButton is attached it will disable AutoGeofence Zone.

Edit iButton List – if list is not empty, attached iButton is tested against an iButton list, if match is found AutoGeofence zone is disabled.

Priority – Priority of generated event, which will be applied to saved record.

Enter Event – Event generation on Geofence entrance.

Exit Event – Event generation on Geofence exit.

On Both - Event generation on Geofence entrance Or exit

Note that AutoGeofencing does not require entering coordinates, instead it requires GPS visibility. If vehicle stopped and activation timeout has passed, an AutoGeofence will be created around vehicle's last position with set Radius value. AutoGeofence event generation works the same as Geofencing mentioned above.

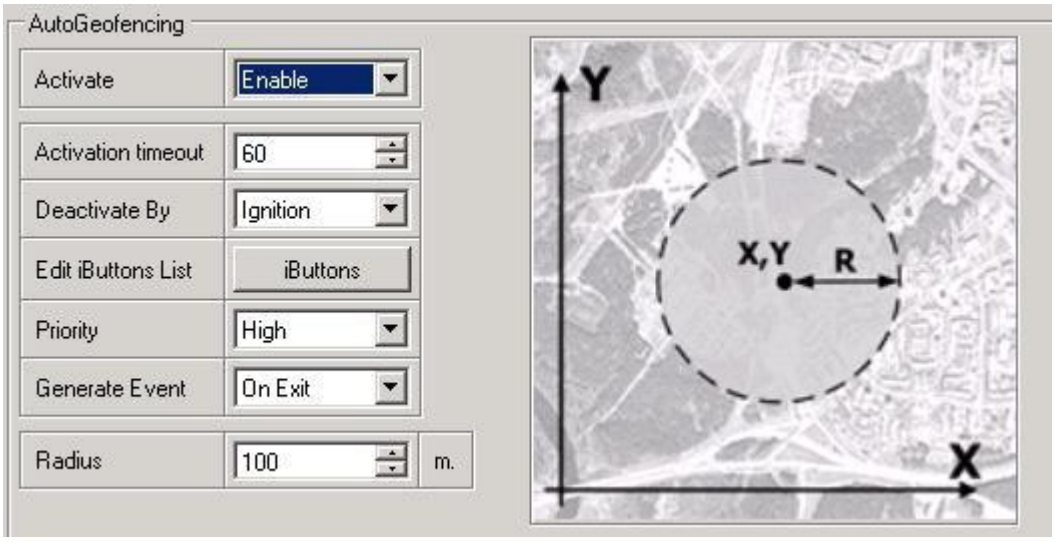

Figure 30. Geofence configuration

Note: FM1202 operates GMT:0 time without daylight saving.

5.14.4 SMS events

SMS events functionality allows FM1202 to send a configured SMS when an event is triggered. This event can be triggered by:

- Green Driving
- OverSpeeding
- Authorized Driving
- Immobilizer
- Trip start/stop
- Geofence
- AutoGeofence
- I/O event

When any of the above events is triggered, FM1202 sends a configured SMS message to a defined phone number. If SMS events is activated, but there are no numbers defined in SMS events PreDefined Numbers list (figure 1), then the device will not send any messages.

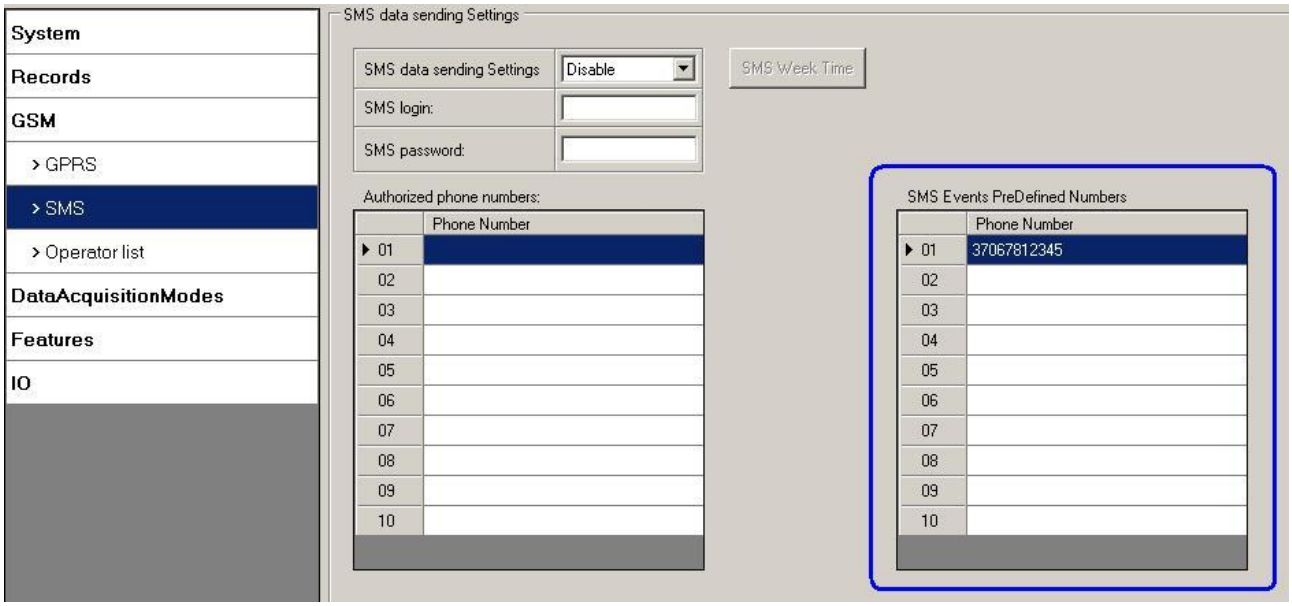

Figure 1 SMS Events PreDefined Numbers list

The sent SMS messages format is according to:

"Date Time EventText"

For example, if FM1202 is configured to send an SMS, when Digital Input 1 reaches High level, with priority High and configured to generate event on both range enter and exit (figure 2), then the sent SMS is:

"2012/6/7 12:00:00 Digital Input 1"

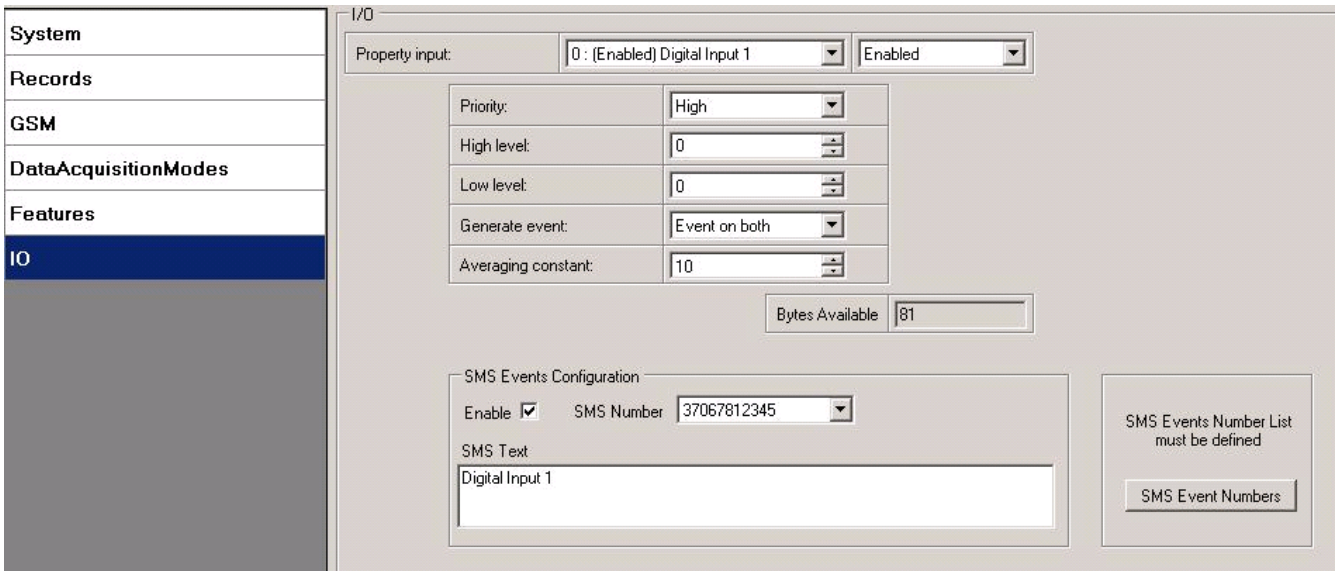

Figure 2 Configured Digital Input 1 SMS event

The SMS Text field can be altered and any text can be entered. Maximum message length is 90 symbols (numbers, letters and symbols in ASCII, except for comma ",").

ATTENTION!
If FM1202 is in Deep Sleep mode and SMS event occurs with LOW priority (which does not wake up FM1202), then the device does not send the message. It is saved in device memory until it wakes up from Deep Sleep mode and GSM modem starts working normally. After it wakes up, all the messages that are saved in memory will be sent, but keep in mind that only 10 messages can be saved in memory – all other messages will not be saved, until there is room in device memory.

5.14.4.1 SMS events configuration

Scenarios

To configure SMS events for scenarios click scenarios window. Enabled scenarios will automatically appear near the SMS event window (figure 3). Note, that Green Driving can't work together with Over Speeding and Authorized Driving can't work together with Immobilizer scenario– only one of them could be enabled. After enabling SMS events, different message texts can be written for different scenarios.

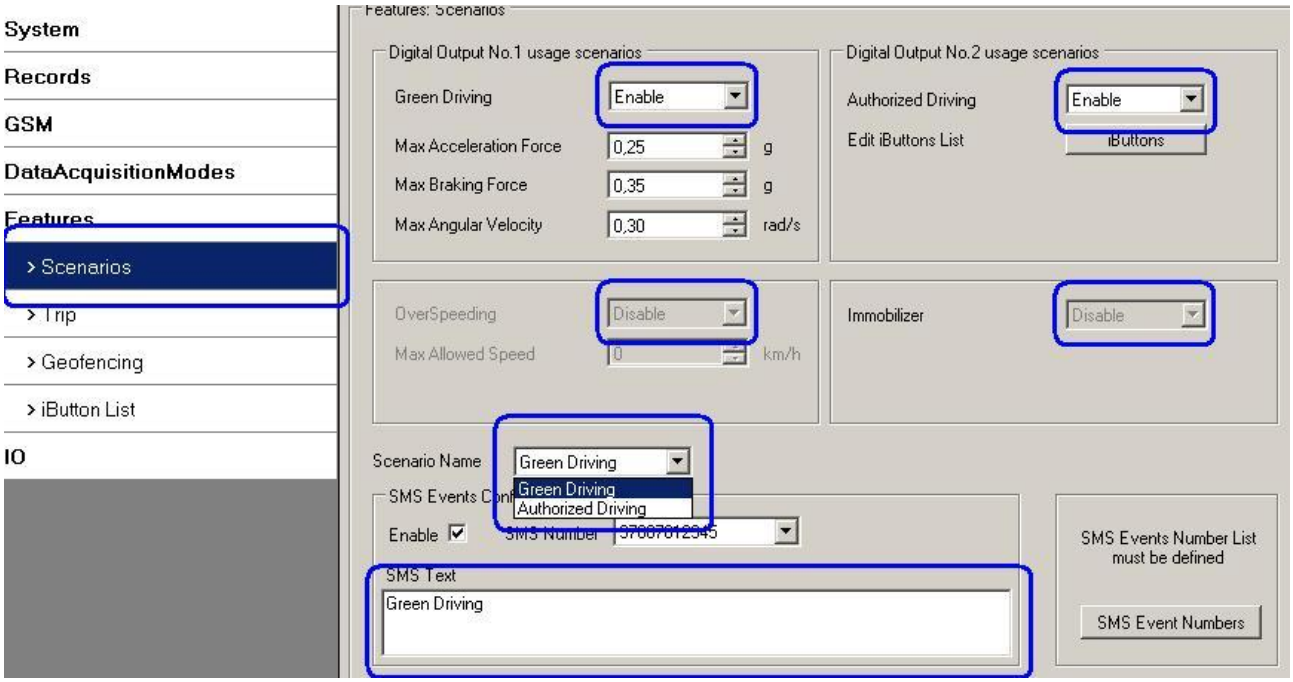

Figure 3 Scenarios SMS event configuration

When any of the scenarios events occurs, a text message will be sent to the predefined number.

Trip

In order to configure Trip SMS events click on Trip window. After enabling SMS Events (figure 4), trip event will be triggered and message sent, when Trip starts (GPS speed exceeds the speed in Start Speed (ex. 5 km/h) and when Trip stops, that is ignition is turned off longer then the time written in Ignition Off Timeout (ex. 60 seconds).

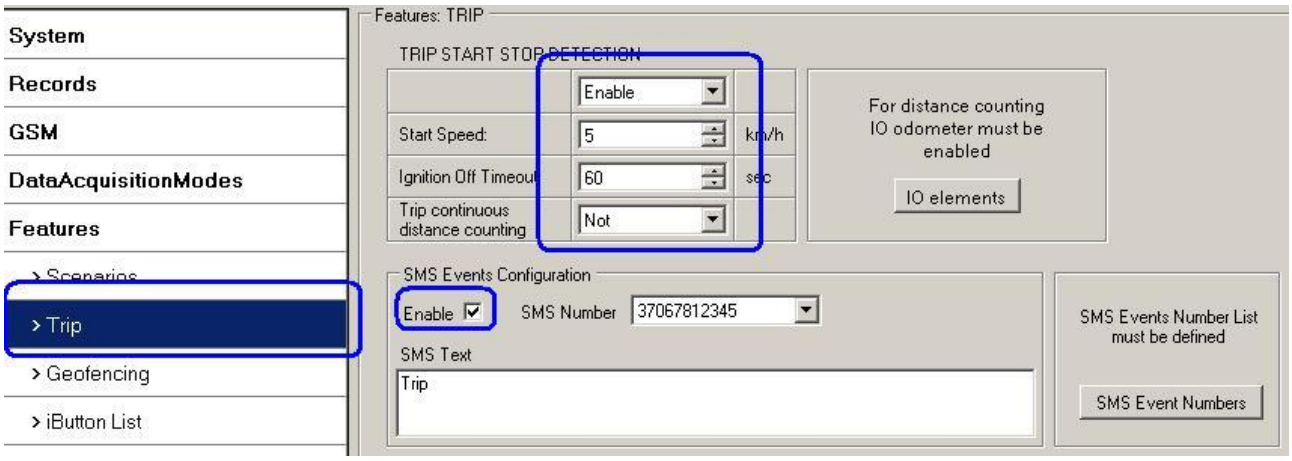

Figure 4 Trip Start/Stop SMS event configuration

Geofence

Geofence SMS event is triggered and message sent when the device exits and/or enters a configured Geofence zone. The Geofence zone must be configured to generate an event On Exit, On Enter or On Both (figure 5). If No Event is selected, then it is not possible to turn on SMS events. If several zones are created then SMS events can be turned on separately for each zone entering different text message.

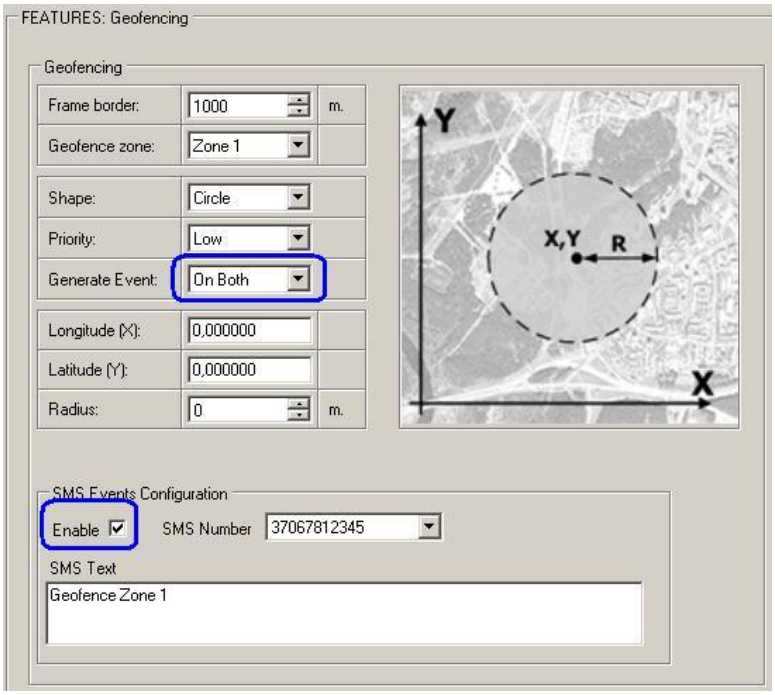

Figure 5 Geofence SMS event configuration

AutoGeofence

SMS events for AutoGeofence are configured the same as in Geofence. AutoGeofence and its SMS event configuration is next to Geofence configuration (figure 6).

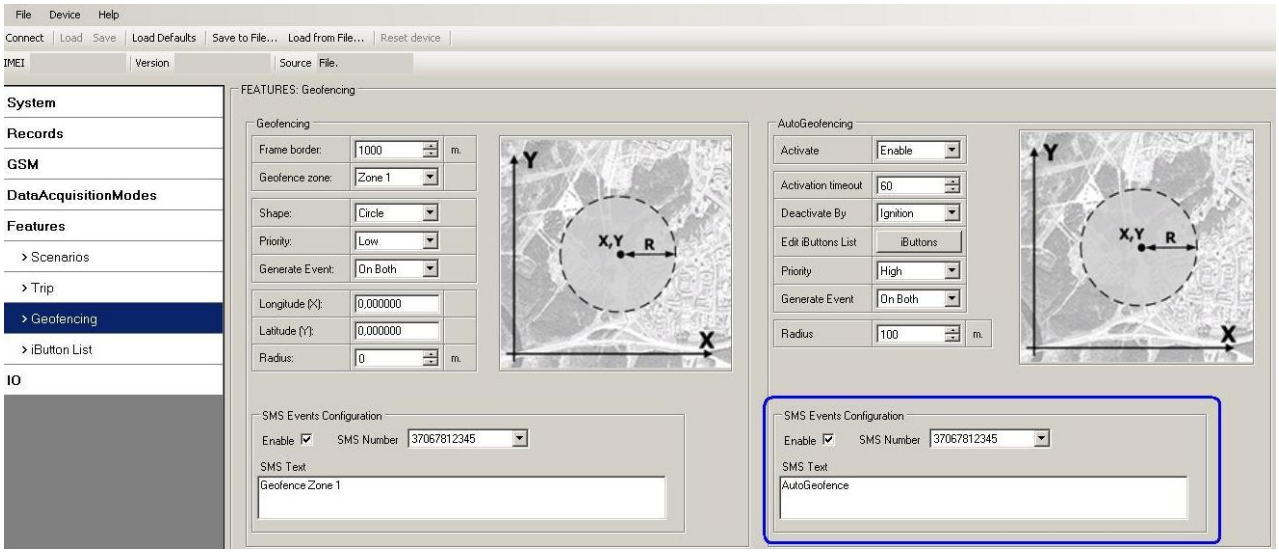

Figure 6 AutoGeofence SMS event configuration

I/O events

FM1202 sends SMS event message when a configured I/O property enters and/or exits its configured High/Low boundaries or Hysteresis event generation is chosen (Monitoring does not generate event, so SMS event could not be configured). Every IO element SMS event can be configured to send individual message to different numbers.

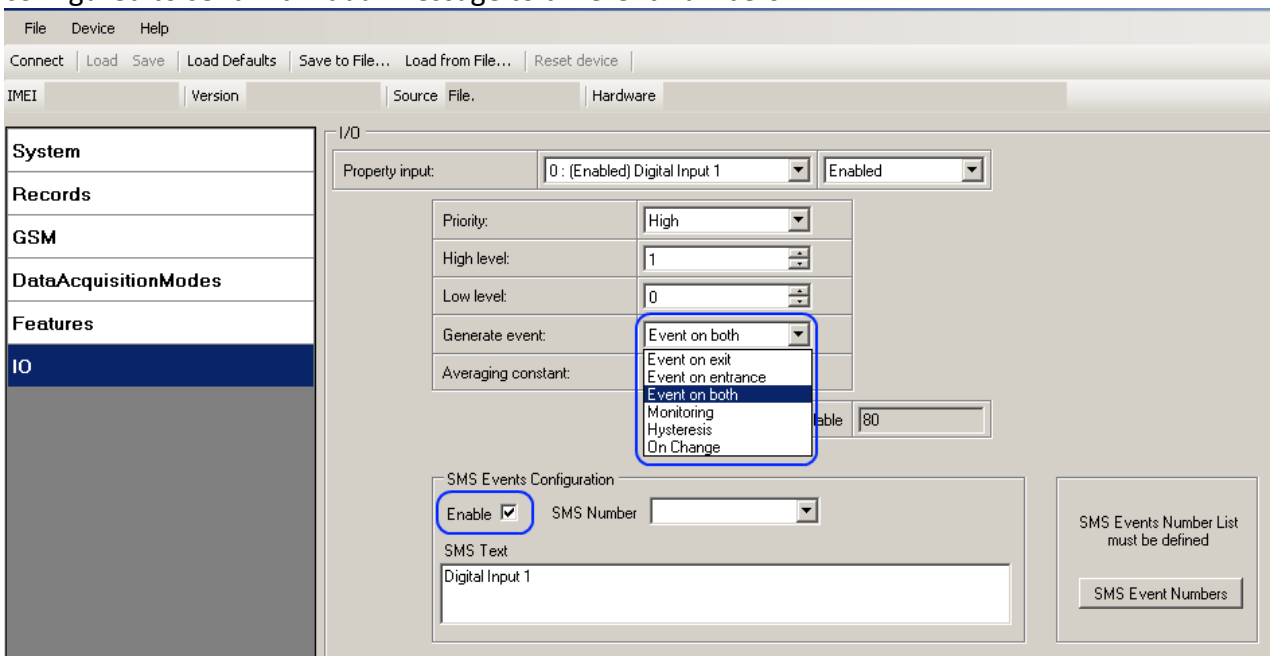

Figure 7 I/O SMS event configuration

5.15 I/O settings

When no I/O element is enabled, AVL packet comes with GPS information only. After enabling I/O element(s) AVL packet along with GPS information contains current value(s) of enabled I/O element.

Permanent I/O elements (are always sent to server if enabled)			
Nr.	Property Name	Bytes	Description
1	Digital Input Status 1	1	Logic: 0 / 1
2	Digital Input Status 2	1	Logic: 0 / 1
3	Digital Input Status 3	1	Logic: 0 / 1
4	Analog Input 1	2	Voltage: mV, 0 – 30’000 mV
5	GSM level	1	GSM signal level value in scale 1 – 5
6	Speed	2	Value in km/h, 0 – xxx km/h
7	External Power Voltage	2	Voltage: mV, 0 – 30 V
8	GPS Power	2	States: 0 – short circ., 1 – connected.
9	Dallas Temperature	4	10 * Degrees (°C), -55 - +115, if 3000 – Dallas error
10	iButton ID	8	iButton ID number
11	Data Mode	1	0 – home on stop, 1 – home on move, 2 – roaming on stop, 3 – roaming on move, 4 – unknown on stop, 5 – unknown on move
12	Digital output 1 state	1	Logic: 0 / 1
13	Digital output 2 state	1	Logic: 0 / 1
14	PDOP	2	Probability * 10; 0-500
15	HDOP	2	Probability * 10; 0-500
16	Odometer Value (Virtual Odometer)	4	Distance between two records: m
17	Sleep mode	1	0 – not deep sleep mode, 1 – GPS sleep mode, 2 – deep sleep mode
18	Cell ID	2	GSM base station ID
19	Area Code	2	Location Area code (LAC), it depends on GSM operator. It provides unique number which assigned to a set of base GSM stations. Max value: 65536
20	Movement Sensor	1	0 – not moving, 1 – moving.
21	GSM operator Code	4	Currently used GSM Operator code
Eventual I/O elements (generate and send record to server only if appropriate conditions are met)			
Nr.	Property Name	Bytes	Description
22	Geofence zone 01	1	Event: 0 – target left zone, 1 – target entered zone
23	Geofence zone 02	1	Event: 0 – target left zone, 1 – target entered zone
24	Geofence zone 03	1	Event: 0 – target left zone, 1 – target entered zone
25	Geofence zone 04	1	Event: 0 – target left zone, 1 – target entered zone
26	Geofence zone 05	1	Event: 0 – target left zone, 1 – target entered zone
27	Auto Geofence	1	Event: 0 – target left zone, 1 – target

			entered zone
28	Trip	1	1 – trip start, 0 – trip stop
29	Immobilizer	1	1 – iButton connected
30	Authorized driving	1	1 – authorized iButton connected
31	Green driving type	1	1 – harsh acceleration, 2 – harsh braking, 3 - harsh cornering
32	Green driving value	1	Depending on green driving type: if harsh acceleration or braking – g*100 (value 123 -> 1.23g), if harsh cornering – degrees (value in radians)
33	Over Speeding	2	At over speeding start km/h, at over speeding end km/h

There are two types of operations with Permanent I/O elements: simple monitoring and event generating. Monitoring method is used when current I/O information needed with regular GPS coordinates. Event generating method is used when additional AVL packet is needed when current value of I/O exceeds predefined High and Low levels. I/O settings allow defining I/O event criteria.

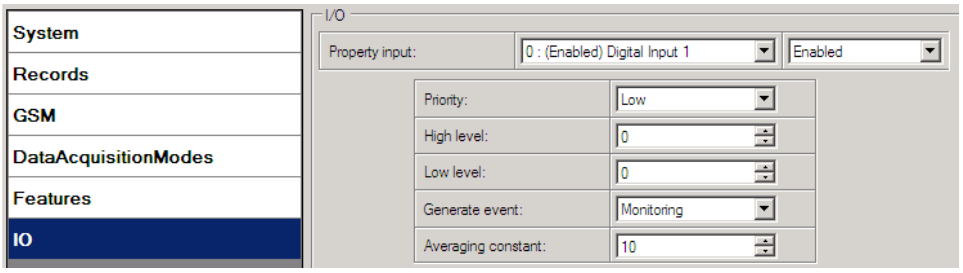

Figure 31. I/O settings

Enabled or disabled field – allows enabling I/O element so it is added to the data packet and is sent to the server. By default all I/O element are disabled and FM1202 records only GPS coordinates.

Priority (AVL packet priority) can be low, high or panic. Regular packets are sent as Low priority records. When low priority event is triggered, FM1202 makes additional record with indication that the reason for that was I/O element change. When High priority is selected, module makes additional record with high priority flag and sends event packet immediately to the server by GPRS. Panic priority triggers same actions as high priority, but if GPRS fails, it sends AVL packet using SMS mode if SMS is **enabled in SMS settings**.

High and Low levels – define I/O value range. If I/O value enters or exits this range, FM1202 generates event. “Generate event” parameter defines when to generate event – when value enters defined range, exits it or both.

Averaging constant – it is an I/O event delay parameter. In some applications there is no need to generate events on every I/O range enter/exit immediately. Sometimes it is necessary to wait some time interval before event generating. Averaging constant allows setting I/O event delay (averaging). If I/O value is entering or leaving predefined range, it must have same value for Averaging constant time. 1 Averaging constant value equals about 30 miliseconds. In Deep Sleep mode there is no Averaging.

Note: I/O element's "Movement sensor" Averaging constant is interpreted as Start Move Timeout in seconds (from 1 to 59).
Start Move Timeout – is a time interval required for movement sensor to be in the moving state, to consider vehicle as moving.

5.15.1 Monitoring

I/O monitoring starts after enabling I/O element and setting up I/O parameters as it is shown below:

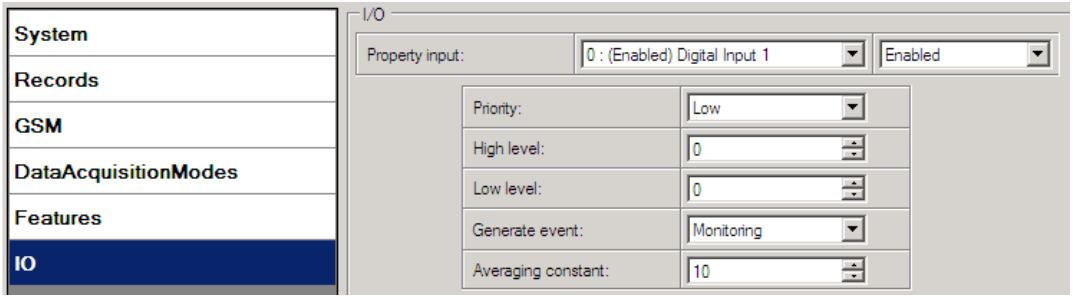

Figure 32. I/O settings

5.15.2 Din3/Ain IO element configuration

Digital input 3 (Din3) and Analog input share the same wire. Depending on the configuration, it is possible how to use it: as digital input or analog input. In the configurator it is available as additional parameter to select from:

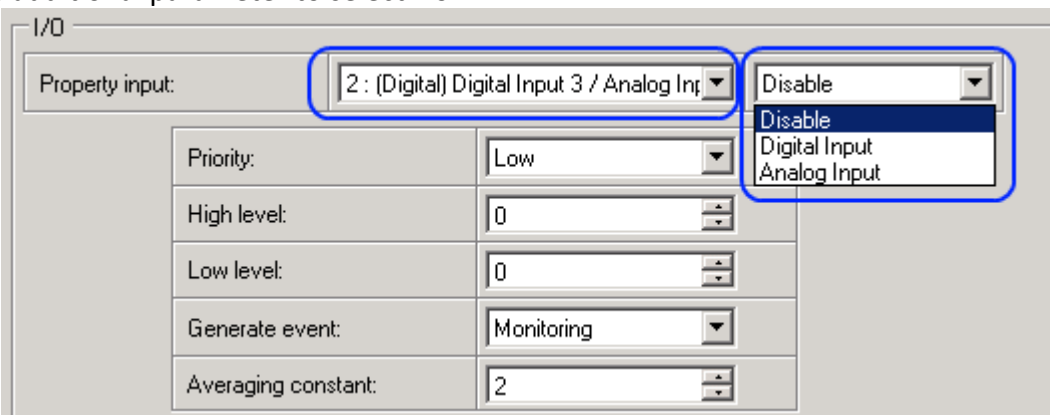

Figure 32. Din3/Ain I/O settings

5.15.3 Event Generating

Events happen when the value of enabled I/O intersects thresholds (enter, exit or on both) predefined by High and Low level thresholds. Table below defines all available values of I/O settings.

Setting	Value
Priority	low, high
High level	maximum threshold
Low level	minimum threshold
Generate event	on interval enter, on interval exit, on both enter and exit
Average constant	$1 – 2^{32}$ (4 Bytes)

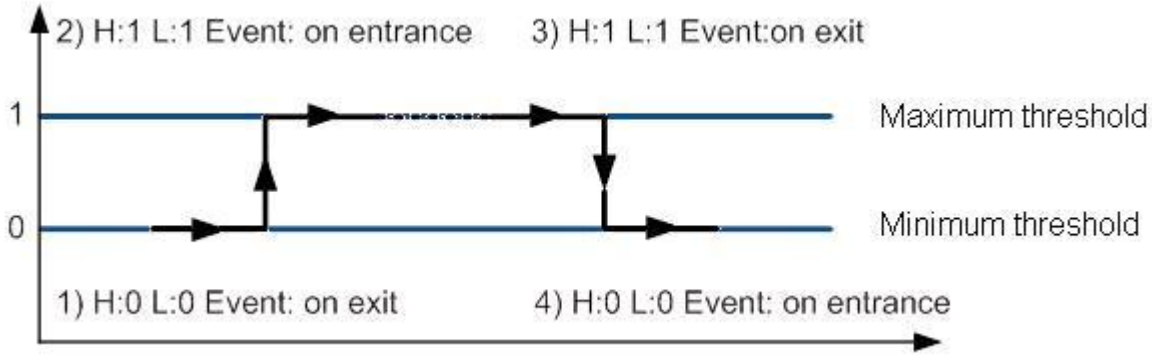

Figure 33. Digital Input event generation example

5.15.4 Hysteresis

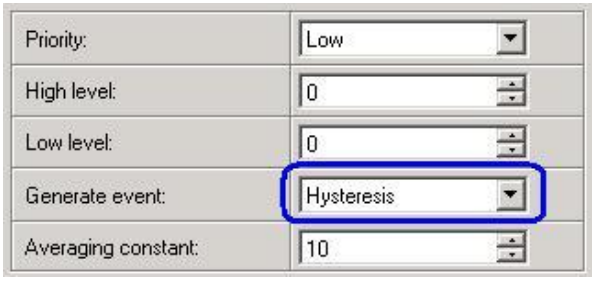

Figure 34. Hysteresis parameter configuration

I/O elements can generate events according to hysteresis algorithm. If I/O event operand "Hysteresis" is selected, events will be generated as it is shown in the illustration below (I/O speed is taken as I/O value example):

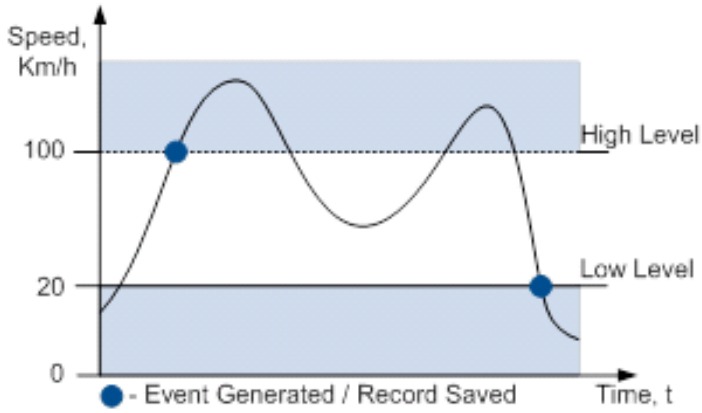

Figure 35. Event generation according hysteresis algorithm

6 SMS COMMAND LIST

Read chapter 5.11 to know how to construct a proper SMS message and send it to FM1202 device. All commands are case sensitive. While FM1202 operates in Deep Sleep mode and user tries to send SMS message it cannot arrive to FM1202 device, because GSM/GPRS module is disabled most of the time (wake up depends on Send Period parameter). FM1202 will receive the SMS when it wakes up (exits deep sleep mode).

6.1 SMS command list

Command	Description	Response
getstatus	Modem Status information	Yes
getweektime	Current device time, Day of Week and amount of minutes passed since start of week	Yes
getops	List of currently available GSM operator	Yes
getcfgtime	Date and Time of last successful configuration	Yes
getgps	Current GPS data and time	Yes
cpureset	Reset CPU	No
resetprof	Reset all FLASH1 profile configuration to default profile	No
getver	Device / Modem / Code version information	Yes
getinfo	Device runtime system information	Yes
deleterecords	Delete all records saved on FLASH	No
getio	Readout digital inputs and outputs	Yes
readio #	Readout input value according entered ID, # - ID value	Yes
setdigout ## Y1 Y2	set digital outputs 0 – OFF, 1 – ON Y1 – timeout for DO1 Y2 – timeout for DO2	Yes
getparam #	Readout parameter value according entered ID. # - ID value.	Yes
setparam # #	Set parameter value according entered ID and Value. 1.# - ID value. 2.# - New Parameter Value	Yes
getparam 1271 #	# values can be 1,2,3.	Yes
setparam 1271 # <value>	# is from 0 to 49.	Yes
flush #,#,#,#,#,#,#	Initiates all data sending to specified target server 1.# - IMEI 2.# - APN 3.# - LOGIN 4.# - PASS 5.# - IP 6.# - PORT 7.# - MODE (0-TCP/1-UDP)	No
readops #	1 – send first 20 operator codes, 2 – send from 21st to 40th operator codes, 3 – send all other operator codes	
sn #	Static navigation, 1 – enable, 0 – disable	Yes

banlist	Banned operators information	Yes
crashlog	Device last information before unexpected reset	Yes
delete_all_sms	Deletes all SMS	No

6.1.1 getstatus

Response details	Description
Data Link	Indicate module connection to server at the moment: 0 – Not connected, 1 – connected
GPRS	Indicate if GPRS is available at the moment
Phone	Voice Call status: 0 – ready, 1 – unavailable, 2 – unknown, 3 – ringing, 4 – call in progress, 5 – asleep
SIM	SIM Status: 0-ready, 1-pin, 2-puk, 3-pin2, 4-puk2
OP	Connected to GSM Operator: numerical id of operator
Signal	GSM Signal Quality [0-5]
NewSMS	Indicate if new message received
Roaming	0 – Home Network, 1 – roaming
SMSFull	SMS storage is full? 0 – ok, 1 – SMS storage full
LAC	GSM Tower Location Area Code
Cell ID	GSM Tower Cell ID Code

Example: Data Link: 0 GPRS: 1 Phone: 0 SIM: 0 OP: 24602 Signal: 5 NewSMS: 0 Roaming: 0 SMSFull: 0 LAC: 1 Cell ID: 864

6.1.2 getweektime

Response details	Description
Clock Sync	Indicates system clock synchronization status. 0 – System is not synchronized, 1 – System synchronized
DOW	Day Of Week – indicates current day of week starting from 1 – Monday, 2 – Tuesday, etc.
Time	Indicates current GMT time
WeekTime	Indicates time in minutes starting from Monday 00:00 GMT

Example: Clock Sync: 1 DOW: 4 Time 12:58 Weektime: 6538

6.1.3 getops

Response details	Description
LIST	Returns list of current available allowed operators.

Example: GSM OP LIST: (2,"LT BITE GSM","BITE","24602"),(3,"OMNITEL LT","OMT","24601"),(3,"TELE2","TELE2","24603")

6.1.4 getcfgtime

Response details	Description
Date/Time	Returns last performed configuration date and time.

Example: Last Configuration was performed on: 2010.4.15 5:45:19

6.1.5 getgps

Response details	Description
GPS	Indicates valid (1) or invalid (0) GPS data
Sat	Count of currently available satellites
Lat	Latitude (Last good Latitude)
Long	Longitude (Last good Longitude)
Alt	Altitude
Speed	Ground speed, km/h
Dir	Ground direction, degrees
Date	Current date
Time	Current GMT time

Example: GPS:1 Sat:7 Lat:54.71473 Long:25.30304 Alt:147 Speed:0 Dir:77 Date: 2007/8/24 Time: 13:4:36

6.1.6 getver

Response details	Description
Code Ver	Firmware version
Device IMEI	IMEI
Device ID	Device ID is used to detect by server which type of configuration to load
Bootloader Ver	Bootloader Version
Modem App Ver	Version of modem application (veiks: nuo 00.05.14)
Rev	Firmware revision

Example: FW Ver:01.02.16 R1 IMEI:356307044707098 DeviceID:000009 BL Ver:04.00 Modem FW Ver:TM11Q_R_01.03.05.01_002 HW:FM1202.Rev71 NiMH 6-30V GGG

6.1.7 getinfo

Response details	Description
INI	Device Initialization Time
RTC	RTC Time
RST	Restart Counter
ERR	Error Counter
SR	Number of Sent Records
BR	Number of broken records
CF	Profile CRC Fail counter
FG	Failed GPRS counter
FL	Failed link counter
UT	UPD Timeout counter
SMS	Sent SMS Counter
NOGPS	No GPS Timer
GPS	GPS receiver state. 0 – OFF, 1 – restarting, 2 – ON but no fix, 3 – ON and operational, 4 – sleep mode
SAT	Average satellites

RS	Reset Source Identification 1 – Low Power, 2 – W Watchdog, 3 – I Watchdog, 4 – Software reset, 5 – Power On, 6 - Pin Reset
MD	Data Mode state. 0 – Home and Stop, 1 – Home and Moving, 2 – Roaming and Stop, 3 – Roaming and Moving, 4 – Unknown and Stop, 5 – Unknown and Moving
RF	Records on flash memory

Example: INI:2013/10/11 8:44 RTC:2013/10/11 8:59 RST:1 ERR:0 SR:0 BR:0 CF:0 FG:0 FL:0 UT:0 SMS:1 NOGPS:0:14 GPS:2 SAT:0 RS:3 MD:4 RF:0

6.1.8 getio

Response details	Description
DI#	Digital Input state
AIN#	Analog input value
DO#	Digital Output state

Example: DI1:0 DI2:0 DI3:0 AIN:0.0000 DO1:0 DO2:0

6.1.9 readio

Response details	Description
ID	I/O element ID
Value	I/O Element value

Example: I/O ID:3 Value:0

6.1.10 setdigout ## Y1 Y2

Sets digital outputs to ON or OFF state (for some time if needed). Value is written as a row for OUT1 and OUT2 values.

Example: ‘setdigout 01 0 5’ will set OUT2 to high level for 5 seconds, while OUT1 to low level.

6.1.11 getparam

Read parameter value. ID consists of 4 digits – first digit must be 1[4], second, third and fourth identifies parameter ID as described in Parameter List chapter.

Response details	Description
ID	Profile number and parameter ID
Value	Parameter value

Example: ‘getparam 1245’ command will request server IP address in profile1.

FM1202 has only one profile (1)

6.1.12 setparam ####

Sets new value for parameter. ID consists of 4 digits – first digit identifies profile, second, third and fourth identifies parameter ID as described in Parameter List chapter. In value field a new parameter value is entered.

Example: 'setparam 1245 127.0.0.1' will change configured IP address in profile1 with new value

6.1.13 getparam 1271

values can be 1,2,3.
If # = 1, Operator codes from 0-19 are read from configuration and sent via SMS.
If #= 2, Operator codes from 20-39 are read from configuration and sent via SMS.
If # = 3, Operator codes from 40-49 are read from configuration and sent via SMS.
If # = any other, Operator codes from 0-19 are read from configuration and sent via SMS.

6.1.14 setparam 1271

If # is from 0 to 49 , # means index of operator code which has to be configured. Up to 20 operator codes may be configured in 1 SMS. Example: *Setparam 16 24602,24603,24605* ,here 16th, 17th and 18th operator codes are set. Note! Other operator codes are left unchanged in the configuration.

6.1.15 readops

Send from device Operator List.

1 – send first 20 operator codes, 2 – send from 21st to 40th operator codes, 3 – send all other operator codes.

6.1.16 flush #,#,#,#,#,#,#

Initiates all data sending by GPRS to specified target server. Comma separated parameters go as numbered:

1.# - IMEI
2.# - APN
3.# - GPRS LOGIN
4.# - GPRS PASSWORD
5.# - IP
6.# - PORT
7.# - MODE (0-TCP/1-UDP)

Parameters are separated by comma (no spaces needed). In case you don't need to enter parameter (Login/Pass) – do not put space, simply put comma and write next parameter.

Example: opa opa flush 353976012555151,banga,,,212.47.99.62,12050,0

Response details	Description
FLUSH SMS Accepted	FLUSH SMS Accepted
# records found on FLASH	Number of records found on FLASH
Minimum Records to Send: #	Number of minimum saved records to send
GPRS Enabled: #	State of the GPRS connection, 0 – disabled; 1 – enabled

Time Sync: #	Indicates time synchronization on the device, 0 – not synchronized; 1 – synchronized

Example: FLUSH SMS Accepted. 11 records found on FLASH. Minimum Records to Send: 1. GPRS Enabled: 1. Time Sync: 1.

6.1.17 sn

Enables or disables Static navigation. 1 – enable, 0 – disable.

6.1.18 banlist

Gives a list of all banned operators.
Example when no operators are banned: 00000.00s.0.000

6.1.19 crashlog

Gives the last information before the device has crashed for unexpected reasons. It is useful when the device acts unexpectedly or restarts for unexplained reasons.
Example if no unexpected reset: empty message returns
Example if unexpected reset was detected: “Crash: 3051,3052,3053”.

7 Debug mode

FM1202 is able to transmit its current state when connected to PC using USB cable. It is used to detect errors and provide information to possible solutions when operating as unexpected. Download Terminal from:
http://avl1.teltonika.lt/Downloads/Software/Terminal.zip.

After launching terminal choose baud rate 115200 and hardware control – none. Select COM port which is assigned to “Virtual COM Port”. Click on ‘Start Log’ button and save a new file. Then click ‘Connect’ to start receiving messages from FM1202.

Also you can log NMEA data directly. To get NMEA data, simply enter the following command into the command field: **.log_nmea:1$0a**.

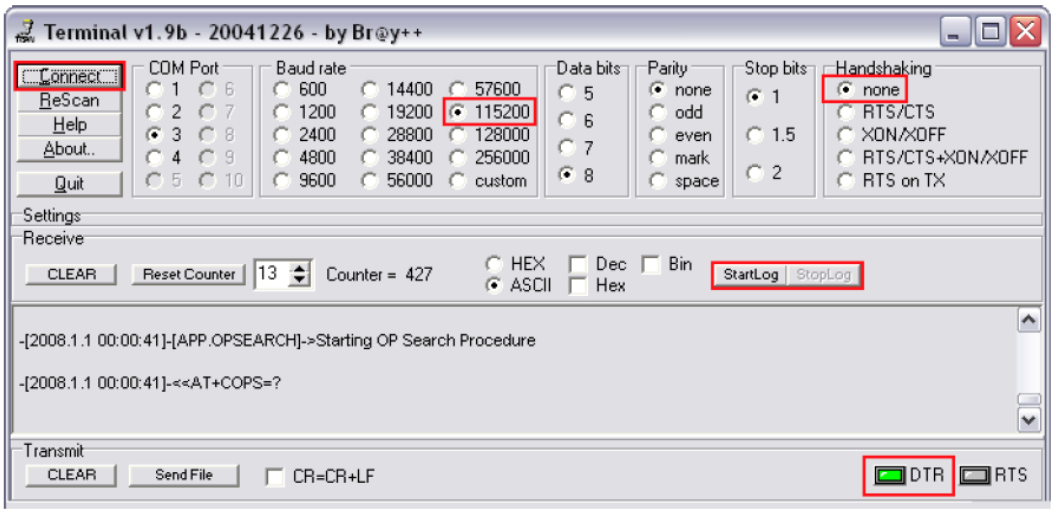

Figure 36. Terminal window for logging

8 Parameter List

8.1 Parameters value types

S8 – Signed Char
S8[*n*] – String of *n* Char
U8 – Unsigned Char
U16 – Unsigned Short
S32 – Signed Integer
U32 – Unsigned Integer
U64 – Unsigned Long Long Integer

8.2 System parameters

8.2.1 Sleep Mode (ID=1000)

Device has two sleep modes: sleep and deep sleep mode. While sleep is disabled (value 0) module will never enter sleep mode, in sleep mode (value 1) module reduces level of power usage by turning GPS module to sleep, in deep sleep mode (value 2) module turns GPS module to sleep and switch GSM module off (note, that FM1202 do not receive SMS while in deep sleep).

Minimum value	Maximum value	Recommended value	Goes with (depends on) parameters	Value type
0	2	-		U8

8.2.2 Sleep timeout (ID=200)

Sleep timeout is time after which FM1202 goes to sleep or deep sleep if other requirements are met. It is measured in minutes.

Minimum value	Maximum value	Recommended value	Goes with (depends on) parameters	Value type
1	3000	-		U8

8.2.3 Analog Input value range (ID=1001)

Analog input measuring resolution and range can be defined as 0…10V (value 0) or 1…30V (value 1).

Minimum value	Maximum value	Recommended value	Goes with (depends on) parameters	Value type
0	1	-		U8

8.2.4 Stop Detection Source (ID=1002)

Device can operate and change its working mode according to motion detection source: ignition (value 0), movement sensor (value 1), GPS (value 2).

Minimum value	Maximum value	Recommended value	Goes with (depends on) parameters	Value type
0	2	-	8.5 Data Acquisition Modes parameters	U8

8.2.5 Static Navigation (ID=1003)

When static navigation is enabled, FM1202 filters out GPS jumps, when it is not moving. When it is disabled, it does not make any changes to collected GPS data.

Minimum value	Maximum value	Recommended value	Goes with (depends on) parameters	Value type
0	1	1		U8

8.2.6 Records (ID=201)

When Saving/Sending Without Time Synchronization is enabled, FM1202 does records and sends them without synchronization. When it is disabled, FM1202 waits for synchronization to record and send records.

Minimum value	Maximum value	Recommended value	Goes with (depends on) parameters	Value type
0	1	-		U8

8.3 Records parameters

8.3.1 Sorting (ID=1010)

Record sorting parameter is responsible for record sorting order. Value of 0 arranging data starting from newest, while value of 1 arranging data starting from oldest.

Minimum value	Maximum value	Recommended value	Goes with (depends on) parameters	Value type
0	1	-	**Data Acquisition Modes parameters (Send Period)**	U8

8.3.2 Active Data Link Timeout (ID=1011)

Defines for how many seconds device will keep connection to the server after successful data transfer while waiting for a new record.

Minimum value	Maximum value	Recommended value	Goes with (depends on) parameters	Value type
0	259200	-	**Data Acquisition Modes parameters (Send Period)**	U32

8.3.3 Server Response Timeout (ID=1012)

Defines time period (in seconds) for server response to sent records.

Minimum value	Maximum value	Recommended value	Goes with (depends on) parameters	Value type
1	300	-	**Data Acquisition Modes parameters (Send Period)**	U8

ATTENTION! Some GSM operators may disconnect the device from an active data link if the device doesn't send any data for a very long time, even if active data link timeout is set to maximum value. The amount of time that an operator keeps the link open depends solely on the operator. For example, if active data link timeout is set to maximum, 259200 seconds (72 hours), and the device sends data to server every 86400 seconds (24 hours), the operator might disconnect the link earlier and the device will have to connect to the server anew. This may cost extra, depending on the operator GPRS data charge. It is strongly recommended, when using active data link timeout, that data sending to the server should not be very rare (24 hours or more). If data sending is more frequent, then the operator will not disconnect the device form the server.

8.4 GSM parameters

8.4.1 GPRS content activation (ID=1240)

Parameter allows or does not allow GPRS usage. If GPRS is not allowed value is 0, if GPRS is allowed value is 1.

Minimum value	Maximum value	Recommended value	Goes with (depends on) parameters	Value type
0	1	-	**APN Name (ID=**1242) **APN username (ID=1243)** **APN Password (ID=1244)**	S8

8.4.2 APN Name (ID=1242)

Parameter defines GPRS Access Point Name.

Minimum value	Maximum value	Recommended value	Goes with (depends on) parameters	Value type
Empty	32 char string	-	**GPRS content activation (ID=1240)** **APN username (ID=1243)** **APN Password (ID=1244)**	S8[32]

8.4.3 APN username (ID=1243)

Parameter defines APN username. In case operator does not use username for login, value should be empty.

Minimum value	Maximum value	Recommended value	Goes with (depends on) parameters	Value type
Empty	30 char string	-	**GPRS content activation (ID=1240)** **APN** Name (ID=1242) **APN Password (ID=1244)**	S8[30]

8.4.4 APN Password (ID=1244)

Parameter defines APN password. In case operator does not use password for login, value should be empty.

Minimum value	Maximum value	Recommended value	Goes with (depends on) parameters	Value type
Empty	30 char string	-	**GPRS content activation (ID=1240)** **APN** Name (ID=1242) **APN username (ID=1243)**	S8[30]

8.4.5 Domain (ID=1245)

Parameter defines AVL data destination server IP address. Example: 212.47.99.62

Minimum value	Maximum value	Recommended value	Goes with (depends on) parameters	Value type
0	50 char string	-	**GPRS content activation (ID=1240)Domain** (ID=1245)	S8[16]

8.4.6 Target Server Port (ID=1246)

Parameter defines AVL data destination server port number. Example: 12050

Minimum value	Maximum value	Recommended value	Goes with (depends on) parameters	Value type
Empty	65535	-	**GPRS content activation (ID=1240)** **Target Server Port (ID=1246)**	U16

8.4.7 Protocol (ID=1247)

Parameter defines GPRS data transport protocol. Module can use TCP or UDP transport protocol to send data to server. For TCP protocol value is 0, for UDP protocol value is 1.

Minimum value	Maximum value	Recommended value	Goes with (depends on) parameters	Value type
0	1	-	**GPRS content activation (ID=1240)**	U8

8.4.8 SMS Login (ID=1252)

User login is used to ensure module security. Used in every SMS that is sent to device. Example: ba321

Minimum value	Maximum value	Recommended value	Goes with (depends on) parameters	Value type
Empty	5 char	-	**SMS Password (ID=1253)** **Server Number (8.4.12)**	S8[5]

8.4.9 SMS Password (ID=1253)

User password is used to ensure module security. Used in every SMS that is sent to device. Example: ab123

Minimum value	Maximum value	Recommended value	Goes with (depends on) parameters	Value type
Empty	5 char	-	**SMS Login (ID=1252)** **Server GSM Number (8.4.12)**	S8[5]

8.4.10 SMS data sending settings (ID=1250)

Parameter allows or does not allow sending AVL data using binary SMS. If SMS use is not allowed value is 0 and 1 if SMS use is allowed.

Minimum value	Maximum value	Recommended value	Goes with (depends on) parameters	Value type
0	1	-	**SMS Data send week time schedule (ID=1273)**	S8

8.4.11 SMS Data send week time schedule (ID=1273)

Parameter defines SMS data sending according to week time schedule. This parameter is used to set data sending on selected week days and hours. Minimum time step is 10 minutes.

Example value: 7F,FF,FF,FF,FF,FF,FF,FF,FF,FF,FF,FF,FF,FF,FF,FF,FF,FF,FF,FF

For more information *read 8.5.1.4 "Schedule parameter format".*

8.4.12 Authorized phone numbers (ID=1260-1269)

If at least one number is entered then only those number can send messages to device. Number must be entered without "+" or "00".

Example: 37060012346

Minimum value	Maximum value	Recommended value	Goes with (depends on) parameters	Value type
1 digit	16 digits	-		S8[17]

If SMS data sending is enabled (ID=1250) first value in a list is server GSM number. The SMS with 24 coordinates is sent to this number.

8.4.13 SMS Event PreDefined Numbers (ID=150-159)

In this field are written GSM numbers, to which will be sent "Event SMS" text message. Number must be entered without "+" or "00".

Example: 37060012346

Minimum value	Maximum value	Recommended value	Goes with (depends on) parameters	Value type
1 digit	16 digits	-		S8[17]

8.4.14 Operator List (ID=1271)

Parameter defines operator list. According to this list module selects operating profile. GSM operator codes are comma separated. First in a list is *Home Operator Code*, then Preferred Roaming Operator Codes are written. Example: 24601, 24602, 24705…24503.

Minimum value	Maximum value	Recommended value	Goes with (depends on) parameters	Value type
Empty	7 digits	-		U32

8.5 Data Acquisition Modes parameters

8.5.1 Home Network GSM operator code "Vehicle on STOP" parameters

8.5.1.1 Min Period (ID=1540)

This parameter indicates time interval in seconds in order to acquire new record. If value is 0 it means no records by min period will be saved.

Minimum value	Maximum value	Recommended value	Goes with (depends on) parameters	Value type
0	2592000	-		U32

8.5.1.2 Min Saved Records (ID=1543)

This parameter defines minimum number of records in one data packet that can be sent to server. It has higher priority than Data Send Period (ID=1544).

Minimum value	Maximum value	Recommended value	Goes with (depends on) parameters	Value type
1	255	1	**GPRS Week Time (ID=1545)**	U8

8.5.1.3 Send Period (ID=1544)

This parameter indicates frequency (time interval in seconds) of sending data to server.

Minimum value	Maximum value	Recommended value	Goes with (depends on) parameters	Value type
0	2592000	-	**Min Saved Records (ID=1543)** **GPRS Week Time (ID=1545)**	U32

8.5.1.4 GPRS Week Time (ID=1545)

This parameter manages when it is allowed to open GPRS context. When module starts it is prohibited to open the context. When modem's GPRS context is closing (for example changing network) it is allowed to open it only at a defined time. It is possible to allow connections every 10 minutes up to once per day.

Example value: 7F,FF,FF,FF,FF,FF,FF,FF,FF,FF,FF,FF,FF,FF,FF,FF,FF,FF,FF

Schedule parameter format:

Time is defined as 19 byte array. First byte of array defines week days; the rest 18 bytes define timestamps with 10 minute interval. In first byte, first bit (LSB) defines if module should connect to GPRS (send SMS) on Monday, second bit – on Tuesday and so on up to seventh bit – which means Sunday. Eighth bit (MSB) is not used. If bits value is 0 then device is not allowed to open GPRS context, but if it is already open – does not close it. If value is 1 it will work as day minutes are defined in rest of the bytes. Day's minutes are defined by 18 bytes (144 bits). Every n^{th} bit (beginning from the first bit (LSB) and ending 18 bytes 8th bit (MSB)) indicates every 10th minute of the day (day has 1440 minutes).

Sample: GPRS will be allowed on Monday to Friday at 8:00 and 16:00 GMT. The following value should be configured:

00011111 00000000 00000000 00000000 000000000 00000000 00000000 00000001 00000000 00000000 00000000 00000000 00000000 000000001 00000000 00000000 00000000 00000000 00000000

Red bits indicate that GPRS will be allowed every day except Saturdays and Sundays. Blue bits indicate 480 and 720 minutes (480min = 8h and 720min = 16h). So the parameter value should be: 1F,00,00,00,00,00,00,01,00,00,00,00,00,01,00,00,00,00,00

It should be sent as UTF8 encoded string.

8.5.2 Home Network GSM operator code "Vehicle MOVING" parameters

8.5.2.1 Min Period (ID=1550)

This parameter indicates time interval in seconds in order to acquire new record. If value is 0 it means no records by min period will be saved.

Minimum value	Maximum value	Recommended value	Goes with (depends on) parameters	Value type
0	2592000	-	**Min Distance (ID=1551)** **Min Angle (ID=1552)** **GPRS Week Time (ID=1555)**	U32

8.5.2.2 Min Distance (ID=1551)

This parameter indicates distance in meters in order to acquire new record. Record is stored when the distance between previous records is greater than parameters value. If value is 0 it means no records by min distance will be saved.

Minimum value	Maximum value	Recommended value	Goes with (depends on) parameters	Value type
0	65535	-	**Min Period (ID=1550)** **Min Angle (ID=1552)** **GPRS Week Time (ID=1555)**	U32

8.5.2.3 Min Angle (ID=1552)

This parameter indicates angle in degrees in order to acquire new record. If angle difference between last recorded coordinate and current position is greater than defined value, new record is stored. This parameter is operational, when speed is higher than 10km/h. If value is 0 it means no records by min angle will be saved.

Minimum value	Maximum value	Recommended value	Goes with (depends on) parameters	Value type
0	180	-	**Min Period (ID=1550)** **Min Distance (ID=1551)** **GPRS Week Time (ID=1555)**	U16

8.5.2.4 Min Saved Records (ID=1553)

This parameter defines minimum number of records in one data packet that can be sent to server. It has higher priority than Data Send Period (ID=1554).

Minimum value	Maximum value	Recommended value	Goes with (depends on) parameters	Value type
1	255	1	**Min Period (ID=1550)** **Min Distance (ID=1551)** **Min Angle (ID=1552)** **GPRS Week Time (ID=1555)**	U8

8.5.2.5 Send Period (ID=1554)

This parameter indicates frequency (time interval in seconds) of sending data to server.

Minimum value	Maximum value	Recommended value	Goes with (depends on) parameters	Value type
0	2592000	-	**GPRS Week Time (ID=1545)**	U32

8.5.2.6 GPRS Week Time (ID=1555)

Read chapter 8.5.1.4 "GPRS Week Time"..

8.5.3 Roaming Network GSM operator code "Vehicle on STOP" parameters

8.5.3.1 Min Period (ID=1560)

This parameter indicates time interval in seconds in order to acquire new record. If value is 0 it means no records by min period will be saved.

Minimum value	Maximum value	Recommended value	Goes with (depends on) parameters	Value type
0	2592000	-		U32

8.5.3.2 Min Saved Records (ID=1563)

This parameter defines minimum number of records in one data packet that can be sent to server. It has higher priority than Data Send Period (ID=1564).

Minimum value	Maximum value	Recommended value	Goes with (depends on) parameters	Value type
1	255	1	**GPRS Week Time (ID=1565)**	U8

8.5.3.3 Send Period (ID=1564)

This parameter indicates frequency (time interval in seconds) of sending data to server.

Minimum value	Maximum value	Recommended value	Goes with (depends on) parameters	Value type
0	2592000	-	**Min Saved Records (ID=1563)** **GPRS Week Time (ID=1565)**	U32

8.5.3.4 GPRS Week Time (ID=1565)

Read chapter 8.5.1.4 "GPRS Week Time".

8.5.4 Roaming Network GSM operator code "Vehicle MOVING" parameters

8.5.4.1 Min Period (ID=1570)

This parameter indicates time interval in seconds in order to acquire new record. If value is 0 it means no records by min period will be saved.

Minimum value	Maximum value	Recommended value	Goes with (depends on) parameters	Value type
0	2592000	-	**Min Distance (ID=1571)** **Min Angle (ID=1572)** **GPRS Week Time (ID=1575)**	U32

8.5.4.2 Min Distance (ID=1571)

This parameter indicates distance in meters in order to acquire new record. Record is stored when the distance between previous records is greater than parameter's value. If value is 0 it means no records by min distance will be saved.

Minimum value	Maximum value	Recommended value	Goes with (depends on) parameters	Value type
0	65535	-	**Min Period (ID=1570)** **Min Angle (ID=1572)** **GPRS Week Time (ID=1575)**	U32

8.5.4.3 Min Angle (ID=1572)

This parameter indicates angle in degrees in order to acquire new record. If angle difference between last recorded coordinate and current position is greater than defined value,

new record is stored. This parameter is operational, when speed is higher than 10km/h. If value is 0 it means no records by min angle will be saved.

Minimum value	Maximum value	Recommended value	Goes with (depends on) parameters	Value type
0	180	-	**Min Period (ID=1570)** **Min Angle (ID=1572)** **GPRS Week Time (ID=1575)**	U16

8.5.4.4 Min Saved Records (ID=1573)

This parameter defines minimum number of records in one data packet that can be sent to server. It has higher priority than Data Send Period (ID=1574).

Minimum value	Maximum value	Recommended value	Goes with (depends on) parameters	Value type
1	255	1	**Min Period (ID=1570)** **Min Distance (ID=1571)** **Min Angle (ID=1572)** **GPRS Week Time (ID=1575)**	U8

8.5.4.5 Send Period (ID=1574)

This parameter indicates frequency (time interval in seconds) of sending data to server.

Minimum value	Maximum value	Recommended value	Goes with (depends on) parameters	Value type
0	2592000	-	**Min Saved Records (ID=1573)** **GPRS Week Time (ID=1575)**	U32

8.5.4.6 GPRS Week Time (ID=1575)

Read chapter 8.5.1.4 "GPRS Week Time".

8.5.5 Unknown Network GSM operator code "Vehicle on STOP" parameters

8.5.5.1 Min Period (ID=1580)

This parameter indicates time interval in seconds in order to acquire new record. If value is 0 it means no records by min period will be saved.

Minimum value	Maximum value	Recommended value	Goes with (depends on) parameters	Value type
0	2592000	-		U32

8.5.5.2 Min Saved Records (ID=1583)

This parameter defines minimum number of records in one data packet that can be sent to server. It has higher priority than Data Send Period (ID=1584).

Minimum value	Maximum value	Recommended value	Goes with (depends on) parameters	Value type
1	255	1	**GPRS Week Time (ID=1585)**	U8

8.5.5.3 Send Period (ID=1584)

This parameter indicates frequency (time interval in seconds) of sending data to server.

Minimum value	Maximum value	Recommended value	Goes with (depends on) parameters	Value type
0	2592000	-	**Min Saved Records (ID=1583)** **GPRS Week Time (ID=1585)**	U32

8.5.5.4 GPRS Week Time (ID=1585)

Read chapter 8.5.1.4 "GPRS Week Time".

8.5.6 Unknown Network GSM operator code "Vehicle MOVING" parameters

8.5.6.1 Min Period (ID=1590)

This parameter indicates time interval in seconds in order to acquire new record. If value is 0 it means no records by min period will be saved.

Minimum value	Maximum value	Recommended value	Goes with (depends on) parameters	Value type
0	2592000	-	**Min Distance (ID=1571)** **Min Angle (ID=1572)** **GPRS Week Time (ID=1575)**	U32

8.5.6.2 Min Distance (ID=1591)

This parameter indicates distance in meters in order to acquire new record. Record is stored when the distance between previous records is greater than parameter's value. If value is 0 it means no records by min distance will be saved.

Minimum value	Maximum value	Recommended value	Goes with (depends on) parameters	Value type
0	65535	-	**Min Period (ID=1570)** **Min Angle (ID=1572)** **GPRS Week Time (ID=1575)**	U32

8.5.6.3 Min Angle (ID=1592)

This parameter indicates angle in degrees in order to acquire new record. If angle difference between last recorded coordinate and current position is greater than defined value, new record is stored. This parameter is operational, when speed is higher than 10km/h. If value is 0 it means no records by min angle will be saved.

Minimum value	Maximum value	Recommended value	Goes with (depends on) parameters	Value type
0	180	-	**Min Period (ID=1570)** **Min Angle (ID=1572)** **GPRS Week Time (ID=1575)**	U16

8.5.6.4 Min Saved Records (ID=1593)

This parameter defines minimum number of records in one data packet that can be sent to server. It has higher priority than Data Send Period (ID=1594).

Minimum value	Maximum value	Recommended value	Goes with (depends on) parameters	Value type
1	255	1	**Min Period (ID=1590)** **Min Distance (ID=1591)** **Min Angle (ID=1592)** **GPRS Week Time (ID=1595)**	U8

8.5.6.5 Send Period (ID=1594)

This parameter indicates frequency (time interval in seconds) of sending data to server. In order to send data to server GPRS parameters must be enabled

Minimum value	Maximum value	Recommended value	Goes with (depends on) parameters	Value type
0	2592000	-	**Min Saved Records (ID=1593)** **GPRS Week Time (ID=1595)**	U32

8.5.6.6 GPRS Week Time (ID=1595)

Read chapter 8.5.1.4 "GPRS Week Time".

8.6 Features Parameters

8.6.1 Digital Output No.1 usage scenarios (ID=1600)

Device can operate in its scenario according to selected value: No Scenario for Digital No.1 selected (value 0); Green Driving selected (value 1), Overspeeding selected (value 2).

Minimum value	Maximum value	Recommended value	Goes with (depends on) parameters	Value type
0	2	-		U8

8.6.2 Max Acceleration Force (ID=1602)

It is max allowed acceleration force which can be reached while accelerating without triggering harsh acceleration event.

Minimum value	Maximum value	Recommended value	Goes with (depends on) parameters	Value type
0.25	0.85	0.25	**Digital Output No.1 usage scenarios (ID=1600)**	Float

8.6.3 Max Braking Force (ID=1603)

It is max allowed braking force which can be reached while braking without triggering harsh braking event.

Minimum value	Maximum value	Recommended value	Goes with (depends on) parameters	Value type
0.25	0.85	0.35	**Digital Output No.1 usage scenarios (ID=1600)**	Float

8.6.4 Max Angular Velocity (ID=1604)

It is max allowed cornering angle which can be reached while cornering without triggering harsh cornering event.

Minimum value	Maximum value	Recommended value	Goes with (depends on) parameters	Value type
0.1	1.0	-	**Digital Output No.1 usage scenarios (ID=1600)**	U16

8.6.5 Max allowed Speed (ID=1605)

It is max allowed speed which can be reached. If this value exceeded Over speeding event will occur.

Minimum value	Maximum value	Recommended value	Goes with (depends on) parameters	Value type
0	260	-	**Digital Output No.1 usage scenarios (ID=1600)**	U16

8.6.6 Digital Output No.2 usage scenarios (ID=1601)

Device can operate in its scenario according to selected value: No Scenario for Digital No.2 selected (value 0); Authorized Driving (value 1), Immobilizer (value 2).

Minimum value	Maximum value	Recommended value	Goes with (depends on) parameters	Value type
0	2	-	**iButton List (ID=1610-1659)**	U8

8.6.7 Trip (ID=1280)

This parameter enables ability to detect START and STOP of the trip.

Minimum value	Maximum value	Recommended value	Goes with (depends on) parameters	Value type
0	1	-		U8

8.6.8 Start Speed (ID=1281)

This parameter represents speed, which is detected as minimum speed to indicate TRIP START and generate event.

Minimum value	Maximum value	Recommended value	Goes with (depends on) parameters	Value type
0	255	-	**Trip (ID=1280)**	U8

8.6.9 Ignition Off Timeout (ID=1282)

This parameter represents timeout to wait if ignition is off in order to detect TRIP STOP and generate event.

Minimum value	Maximum value	Recommended value	Goes with (depends on) parameters	Value type
0	65535	-	**Trip (ID=1280)**	U16

8.6.10 Trip Continuous distance counting (ID=1283)

For this feature I/O#11 ODOMETER must be enabled. If I/O ODOMETER is enabled, and Continuous distance counting variable is set to Continuous (value 1), TRIP distance is going to be counted continuously (from TRIP start to TRIP stop) and shown as I/O ODOMETER value.

Minimum value	Maximum value	Recommended value	Goes with (depends on) parameters	Value type
0	1	-	**Trip (ID=1280)** **I/O#11 – Odometer (ID = 1410-1415)**	U8

8.6.11 Geofencing

In this chapter it is explained how to get all parameters for the first Geofence zone (all ID numbers are for the 1st zone). And at the end of the chapter (part 8.6.10) is presented a table with the IDs of all the rest Geofence zones.

8.6.11.1 Frame border (ID=1020)

Geofence border thickness, measured in meters.

Minimum value	Maximum value	Recommended value	Goes with (depends on) parameters	Value type
0	1000000	1000	**All Geofencing parameters**	U32

8.6.11.2 Geofence Zone #1 Shape (ID=1030)

Geofence shape parameter can be: circle – value 0; rectangle – value 1.

Minimum value	Maximum value	Recommended value	Goes with (depends on) parameters	Value type
0	1	-	**All Geofencing parameters**	U8

8.6.11.3 Geofence Zone #1 Priority (ID=1031)

Parameter defines Geofence priority: 0 is low, 1 – high, 2 – panic;

Minimum value	Maximum value	Recommended value	Goes with (depends on) parameters	Value type
0	2	-	**All Geofencing parameters**	U8

8.6.11.4 Geofence Zone #1 Generate Event (ID=1032)

Generate event on:

a) No event – value 0

b) On entering zone – value 1;

c) On exiting zone – value 2;

d) On both – value 3;

Minimum value	Maximum value	Recommended value	Goes with (depends on) parameters	Value type
0	3	-	**All Geofencing parameters**	U8

8.6.11.5 Geofence Zone #1 Longitude (X1) (ID=1033)

Parameter has two meanings dependent on zone shape. If shape is a rectangle, then ID=10333 is left down corner X coordinate. If shape is a circle, then ID=1033 is center of that circle X coordinate.

Sample value: 25.30528

Minimum value	Maximum value	Recommended value	Goes with (depends on) parameters	Value type
-180	180	-	**All Geofencing parameters**	Float

8.6.11.6 Geofence Zone #1 Latitude (Y1) (ID=1034)

Parameter has two meanings dependent on zone shape. If shape is a rectangle, then ID=1034 is left down corner Y coordinate. If shape is a circle, then ID=1034 is center of that circle Y coordinate.

Minimum value	Maximum value	Recommended value	Goes with (depends on) parameters	Value type
-90	90	-	**All Geofencing parameters**	Float

8.6.11.7 Geofence Zone #1 Longitude (X2) (ID=1035)

Parameter has two meanings depending on zone shape. If shape is a rectangle, then ID=1035 is right upper corner X coordinate. If shape is a circle, then ID=1035 is radius of circle with center of ID=1033 and ID=1034.

For rectangle:

Minimum value	Maximum value	Recommended value	Goes with (depends on) parameters	Value type
-180	180	-	**All Geofencing parameters**	Float

For circle:

Minimum value	Maximum value	Recommended value	Goes with (depends on) parameters	Value type
0	1000000	1000	**All Geofencing parameters**	Float

8.6.11.8 Geofence Zone #1 Latitude (Y2) (ID=1036)

If shape is rectangular, then ID=1036 is right upper corner Y coordinate. If shape circle, ID=1036 is not used.

Minimum value	Maximum value	Recommended value	Goes with (depends on) parameters	Value type
-90	90	-	**All Geofencing parameters**	Float

Other 4 GeoFence zone's parameters have the same logic as shown in GeoFence Zone #1.

GeoFence Zone Number	Geofence Zone's parameters
1	1030-1036
2	1040-1046
3	1050-1056
4	1060-1066
5	1070-1076

8.6.12 AutoGeofencing

8.6.12.1 Enable/Disable (ID=1101)

Enable – value 1; disable – value 0;

Minimum value	Maximum value	Recommended value	Goes with (depends on) parameters	Value type
0	1	1		U8

8.6.12.2 Activation Timeout (ID=1102)

Parameter represents AutoGeofencing activation timeout in seconds.

Minimum value	Maximum value	Recommended value	Goes with (depends on) parameters	Value type
0	65535	60	**Enable/Disable (ID=1101)**	U16

8.6.12.3 Deactivate by (ID=1100)

Parameter defines Autogeofence deactivation source. Value 1 is dedicated for attached iButton, value 0 – for Ignition.

Minimum value	Maximum value	Recommended value	Goes with (depends on) parameters	Value type
0	1	-	**Enable/Disable (ID=1101)** **iButton List (ID=1610-1659)**	U8

8.6.12.4 AutoGeofence event Priority (ID=1103)

Parameter defines AutoGeofence event priority: 0 is low, 1 – high;

Minimum value	Maximum value	Recommended value	Goes with (depends on) parameters	Value type
0	1	1	**Enable/Disable (ID=1101)** **AutoGeofence event generating (ID=1104)**	U8

8.6.12.5 AutoGeofence event generating (ID=1104)

Generate event: 0 – no event, 1 - on entering zone; 2 – on exiting zone; 3 – on both;

Minimum value	Maximum value	Recommended value	Goes with (depends on) parameters	Value type
0	3	2	**Enable/Disable (ID=1101)** **AutoGeofence event Priority (ID=1103)**	U8

8.6.12.6 Radius (ID=1105)

Parameter represents radius of circle with center device coordinates after activating AutoGeofence feature.

Minimum value	Maximum value	Recommended value	Goes with (depends on) parameters	Value type
0	1000000	100	**Enable/Disable (ID=1101)** **Deactivate by (ID=1100)**	U32

8.6.13 iButton List (ID=1610-1659)

Read 5.4.4.

Minimum value	Maximum value	Recommended value	Goes with (depends on) parameters	Value type
0	FFFFFFFF FFFFFFFF	-	**Digital Output No.2 usage scenarios (ID=1601)** **Deactivate by (ID=1100)**	U64

8.7 I/O parameters

I/O properties are additional data sources which are recorded along with usual GPS data.

8.7.1 I/O#1 property parameter (ID=1300)

Parameter defines I/O property value. Possible values: enabled (1), disabled (0).

Minimum value	Maximum value	Recommended value	Goes with (depends on) parameters	Value type
0	1	-	**I/O#1 priority (ID=1301)** **I/O#1 High level (ID=1302)** **I/O#1 Low level (ID=1303)** **I/O#1 logic operand (ID=1304)** **I/O#1 averaging length (ID=1305)**	S8

8.7.2 I/O#1 priority (ID=1301)

Parameter defines I/O property type of priority: 0 is low, 1 – high, 2 – panic.

Minimum value	Maximum value	Recommended value	Goes with (depends on) parameters	Value type
0	2	0	**I/O#1 property parameter (ID=1300)** **I/O#1 High level (ID=1302)** **I/O#1 Low level (ID=1303)** **I/O#1 logic operand (ID=1304)** **I/O#1 averaging length (ID=1305)**	S8

8.7.3 I/O#1 High level (ID=1302)

Parameter defines high value of triggered I/O property. This parameter is used to set thresholds for I/O properties to generate events.

Minimum value	Maximum value	Recommended value	Goes with (depends on) parameters	Value type
-2147483647	2147483647	1	**I/O#1 property parameter (ID=1300)** **I/O#1 priority (ID=1301)** **I/O#1 Low level (ID=1303)** **I/O#1 logic operand (ID=1304)** **I/O#1 averaging length (ID=1305)**	S32

8.7.4 I/O#1 Low level (ID=1303)

Parameter defines low value of triggered I/O property. This parameter is used to set thresholds for I/O properties to generate events.

Minimum value	Maximum value	Recommended value	Goes with (depends on) parameters	Value type
-2147483647	2147483647	0	**I/O#1 property parameter (ID=1300)** **I/O#1 priority (ID=1301)** **I/O#1 High level (ID=1302)** **I/O#1 logic operand (ID=1304)** **I/O#1 averaging length (ID=1305)**	S32

8.7.5 I/O#1 logic operand (ID=1304)

Parameter defines when event is sent: 0 – on range exit, 1 – on range entrance, 2 – both, 3 – monitoring, 4 – hysteresis, 5 – on changes.

Minimal value	Maximum value	Recommended value	Goes with (depends on) parameters	Value type
0	4	3	**I/O#1 property parameter (ID=1300)** **I/O#1 priority (ID=1301)** **I/O#1 High level (ID=1302)** **I/O#1 Low level (ID=1303)** **I/O#1 averaging length (ID=1305)**	S8

8.7.6 I/O#1 averaging length (ID=1305)

Parameter defines I/O property sample length to average. If no averaging needed default value is 1.

Minimum value	Maximum value	Recommended value	Goes with (depends on) parameters	Value type
0	2592000	1	**I/O#1 property parameter (ID=1300)** **I/O#1 priority (ID=1301)** **I/O#1 High level (ID=1302)** **I/O#1 Low level (ID=1303)** **I/O#1 logic operand (ID=1304)**	S32

Other I/O property elements can be configured in same logic. All I/O element parameters are listed in the next table.

I/O Element Number	I/O element parameters
I/O#0 – Digital input 1	1300 – 1305
I/O#1 – Digital input 2	1310 – 1315
I/O#2 – Digital input 3/Analog input	1320 – 1325
I/O#4 – Digital output 1	1340 – 1345
I/O#5 – Digital output 2	1350 – 1355
I/O#6 – PDOP	1360 – 1365
I/O#7 – HDOP	1370 – 1375
I/O#8 – Power voltage	1380 – 1385
I/O#9 – GPS power	1390 – 1395
I/O#10 – Movement sensor	1400 – 1405
I/O#11 – Odometer	1410 – 1415
I/O#12 – Actual operator Code	1420 – 1425
I/O#13 – Speedometer	1430 – 1435
I/O#14 – iButton ID	1440 – 1445
I/O#15 – Operating Mode	1450 – 1455
I/O#16 – GSM Signal	1460 – 1465
I/O#17 – Deep Sleep	1470 – 1475
I/O#18 – Cell ID	1480 – 1485
I/O#19 – Area Code	1490 – 1495
I/O#20 – Temperature	1500 – 1505
I/O#21 – Battery Voltage	1510 – 1515
I/O#22 – Battery Current	1520 – 1525

8.7.7 I/O#2 exception for a Digital input 3/Analog input option (ID=1320)

Parameter defines I/O property value. Possible values: disabled (0), Digital Input 3 enabled (1), Analog Input enabled (2).

Minimum value	Maximum value	Recommended value	Goes with (depends on) parameters	Value type
0	2	-	I/O#1 priority (ID=1301) I/O#1 High level (ID=1302) I/O#1 Low level (ID=1303) I/O#1 logic operand (ID=1324) I/O#1 averaging length (ID=1305)	S8

8.8 SMS event configuration

8.8.1 I/O#1 element SMS event configuration (ID=100)

Command sets SMS warning on I/O#1 element.

SMS Format: setparam X Y,W,Z
X – ID
Y – Enable/Disable (1/0)
W – Telephone number INDEX (See **8.4.13 SMS Event Predefined Numbers paragraph**, ID 150 – INDEX 0; ID151 – INDEX 1, …)
Z – SMS Text

Example: “setparam 100 1,5,Digital Input 1 Event!”

Other I/O element SMS events can be configured in same logic. All I/O element SMS event IDs are listed in the next table.

Element name (default SMS Event Text)	ID
Digital Input 1	100
Digital Input 2	101
Digital Input 3	102
Analog Input	103
Digital Output 1	104
Digital Output 2	105
GPS PDOP	106
GPS HDOP	107
External Voltage	108
GPS Power	109
Movement Sensor	110
Odometer Value	111
GSM Operator	112
Speed	113

iButton ID	114
Data Mode	115
GSM Signal	116
Deep Sleep	117
Cell ID	118
Area Code	119
Dallas Temperature	120
Reserved	121
Reserved	122
Reserved	123
Reserved	124
Green Driving	125
OverSpeeding	126
Authorized Driving	127
Immobilizer	128
Trip	129
Geo Zone 1	130
Geo Zone 2	131
Geo Zone 3	132
Geo Zone 4	133
Geo Zone 5	134
Auto Geofence	135
Reserved	136
Reserved	137
Reserved	138
Reserved	139

9 MOUNTING RECOMMENDATIONS

9.1 Connecting Wires

- Wires should be connected while module is not plugged in.
- Wires should be fastened to the other wires or non-moving parts. Try to avoid heat emitting and moving objects near the wires.
- The connections should not be seen very clearly. If factory isolation was removed while connecting wires, it should be applied again.
- If the wires are placed in the exterior or in places where they can be damaged or exposed to heat, humidity, dirt, etc., additional isolation should be applied.
- Wires cannot be connected to the board computers or control units.

9.2 Connecting Power Source

- Be sure that after the car computer falls asleep, power is still available on chosen wire. Depending on car, this may happen in 5 to 30 minutes period.
- When module is connected, be sure to measure voltage again if it did not decrease.
- It is recommended to connect to the main power cable in the fuse box.

9.3 Connecting Ignition Wire

- Be sure to check if it is a real ignition wire – power does not disappear while starting the engine.
- Check if this is not an ACC wire (when key is in the first position, most electronics of the vehicle are available).
- Check if power is still available when you turn off any of vehicles devices.
- Ignition is connected to the ignition relay output. As alternative, any other relay, which has power output, when ignition is on, may be chosen.

9.4 Connecting Ground Wire

- Ground wire is connected to the vehicle frame or metal parts that are fixed to the frame.
- If the wire is fixed with the bolt, the loop must be connected to the end of the wire.
- For better contact scrub paint from the place where loop is connected.

PAY ATTENTION! Connecting the power supply must be carried out in a very low impedance point on-board vehicle network. These points in the car are the battery terminals. Therefore, we recommend connecting the power of FM1202 (wire GND and POWER) directly to the battery terminals. Another valid option is to connect the wires to the main POWER cable inside the fuse box (if there is none, then to the power supply where the fuses of vehicle's computer are), wire GND must be connected in a special point, designed to connect GND vehicle computer. Connecting the GND at an arbitrary point to the mass of the car is unacceptable, as static and dynamic potentials on the line GND will be unpredictable, which can lead to unstable FM1202 and even its failure.

10 FM1202 installation instruction

FM1202 is the device that has internal GNSS and GSM antenna.

Internal GNSS antenna device should be mounted with the sticker view to the open sky (metal free) with not less than ¾ of metal free area as shown in figure 37.

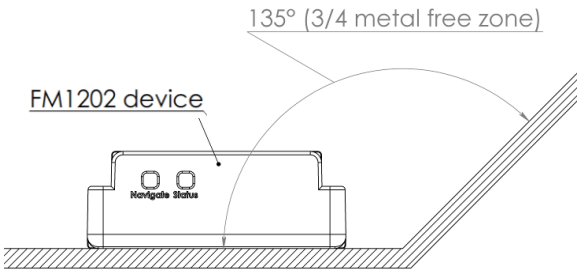

Figure 37. ¾ metal free zone illustration

FM1202 has IP67 protection class. It must be mounted only outside of the vehicle.

The device has 4 mounting holes on the edges, and can be tightened with screws, adhesive tape or plastic straps.

FM1202 area with sticker and GNSS antenna is shown in **Figure 38**.

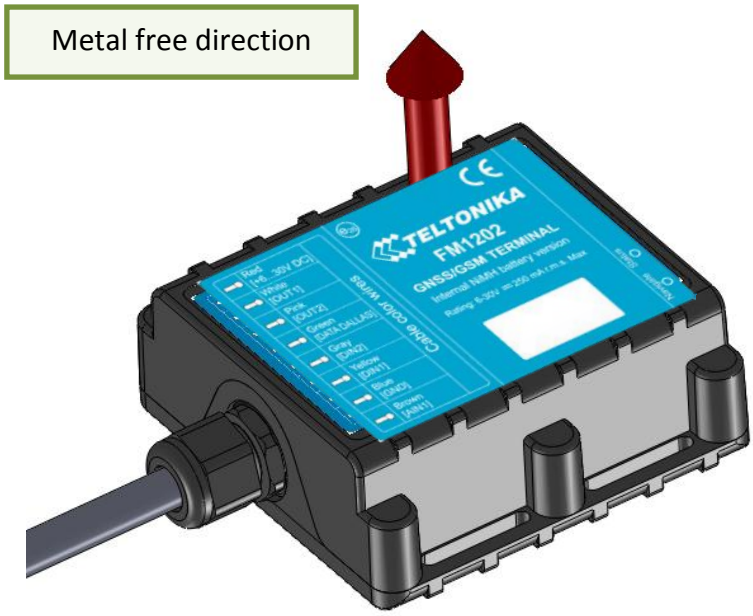

Figure 38. FM1202 view

Possible mounting zones

Trucks

It is strongly recommended to mount FM1202 outside of the vehicle with the sticker direction to a sky, see figure 39.

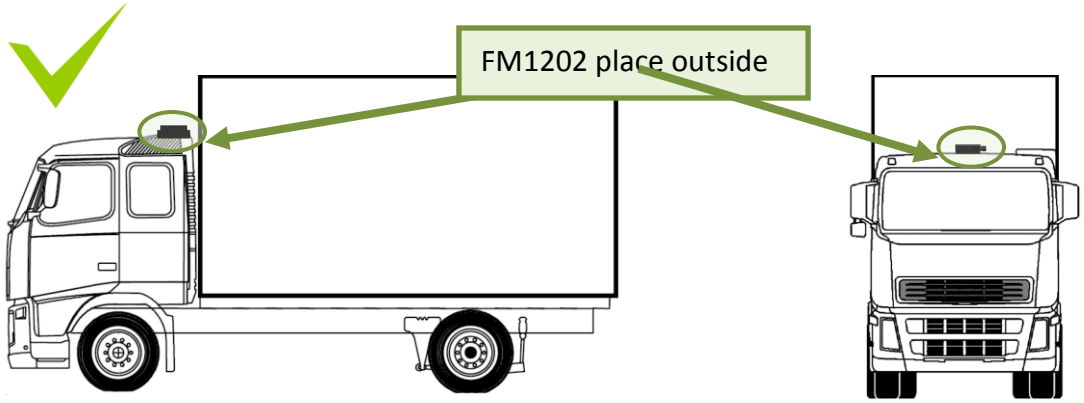

Figure 39. Possible mounting place on truck

Tractors

It is strongly recommended to mount FM1202 outside of the tractor with the sticker direction to a sky, see figure 40.

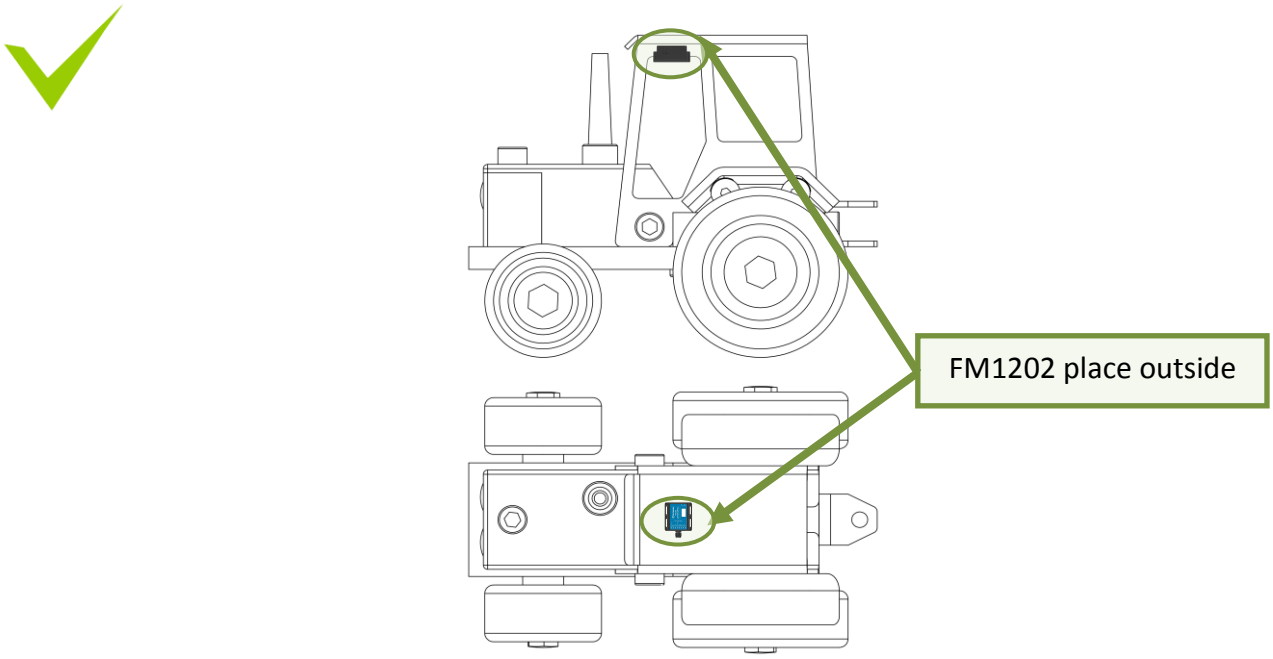

Figure 40. Possible mounting place on tractor

Motor bikes

1. **Device should be mounted on outside.**

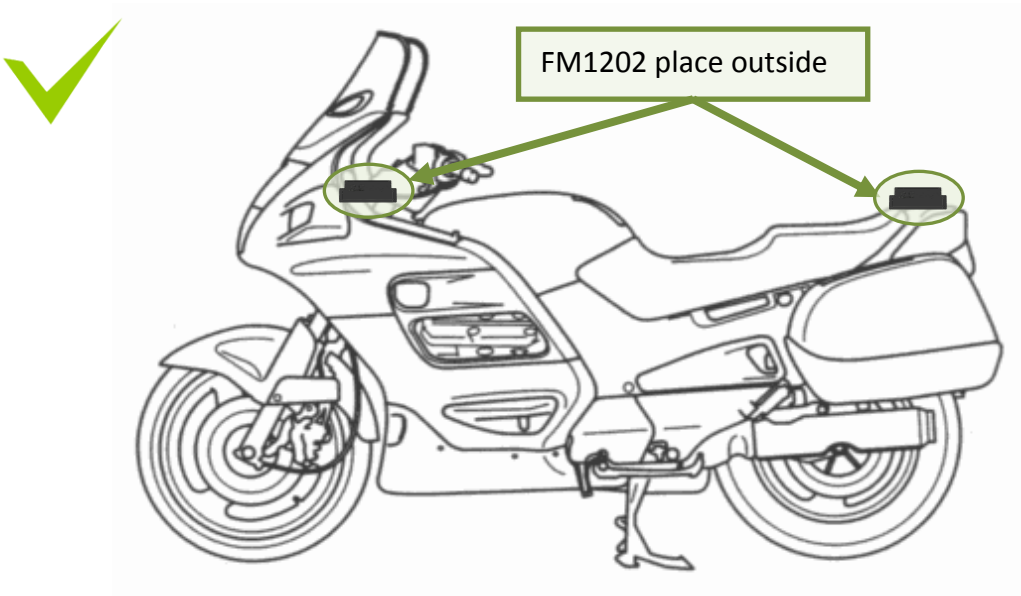

Figure 41. Possible mounting places for motorbikes

2. FM1202 cannot be mounted under the seat!

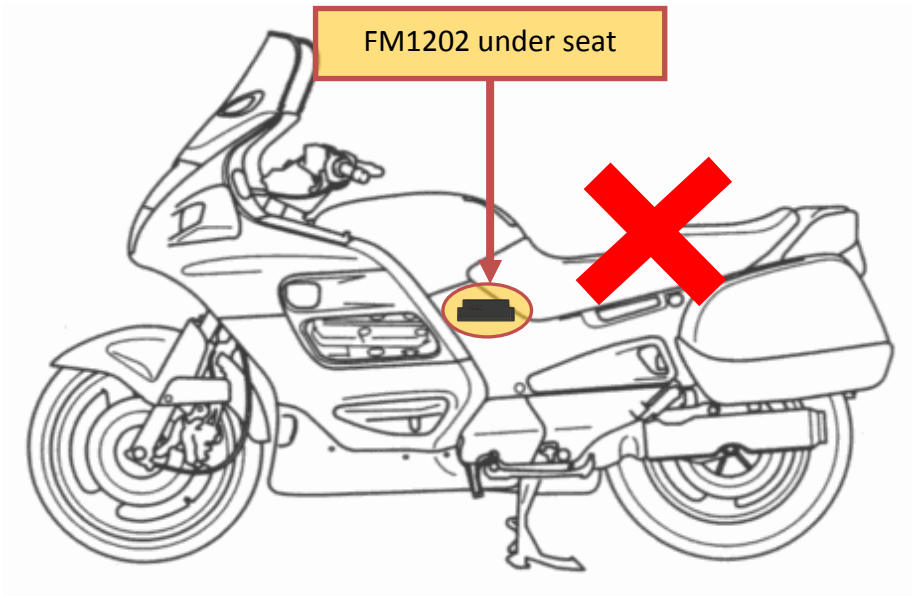

Figure 42. Not mount device under seat

Recommended mounting positions

1. Best FM1202 mounting position is outside of vehicle with any metal above the device.

2. Recommended deviation from horizontal axis of vehicle max 3-5°, as shown in figure 43.

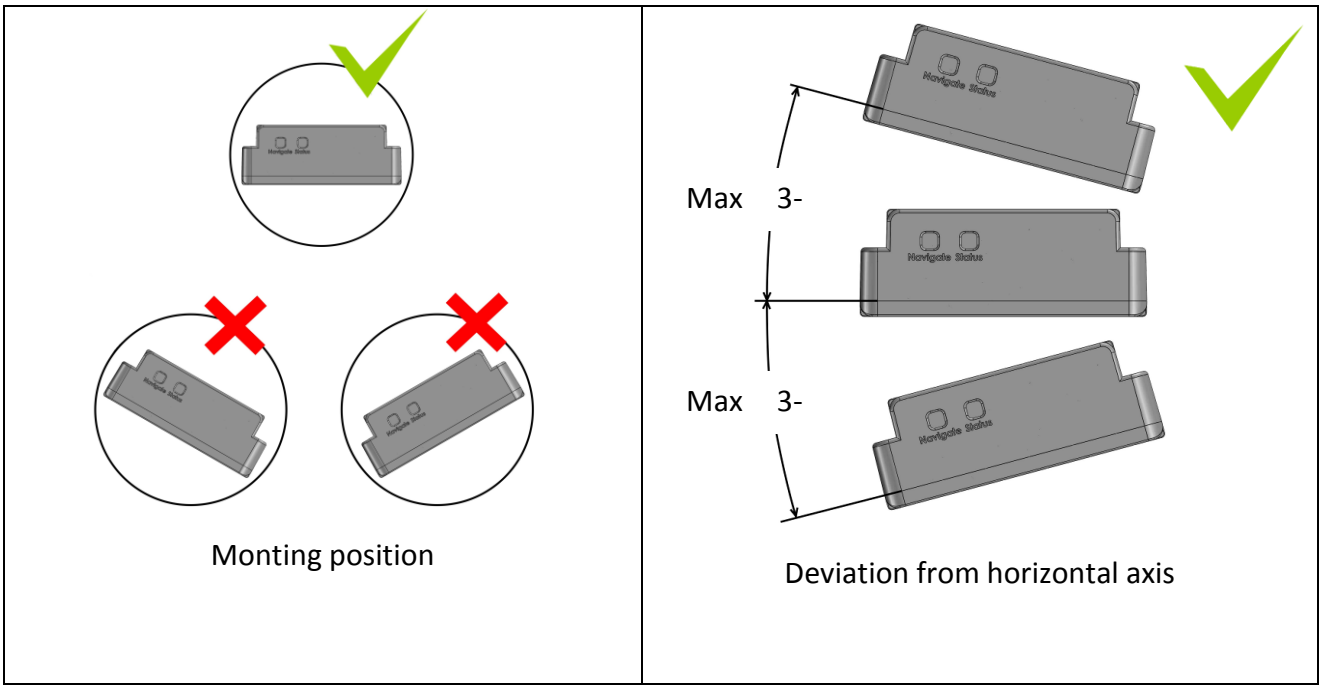

Figure 43. Mounting position and recommended deviation from horizontal axis of vehicle

Mounting position and recommended deviation from longitudinal axis of vehicle ±2°, as shown in figure 44.

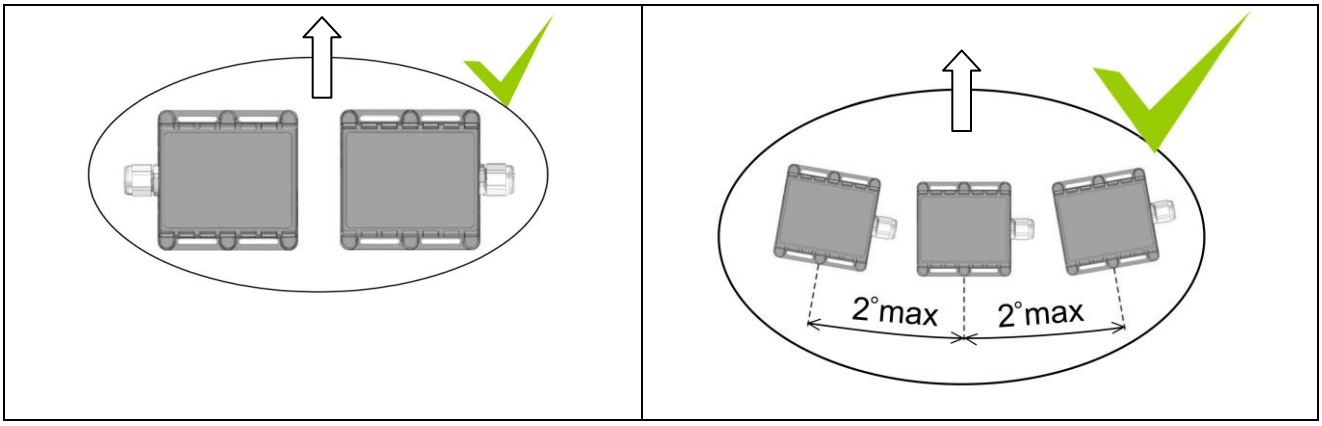

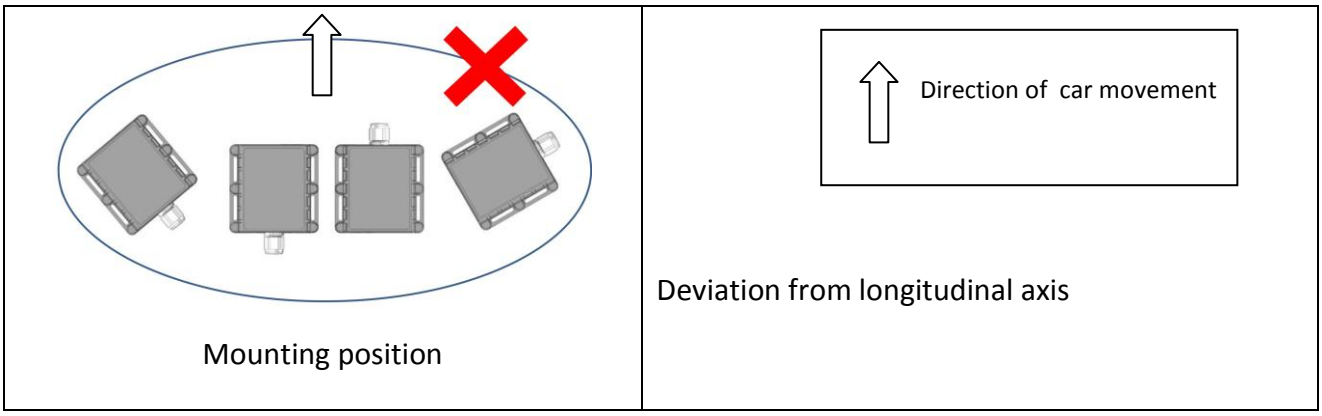

Figure 44. Mounting position and recommended deviation from longitudinal axies of vehicle

Restrictions

1. **FM1202 device can not be mounted inside in the vehicle door!**

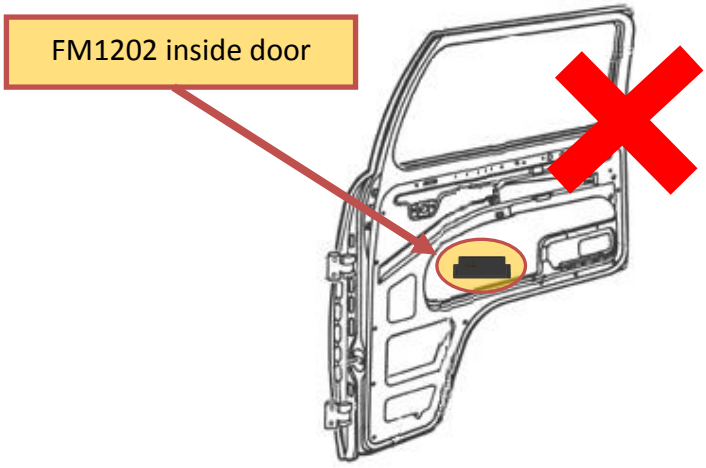

Figure 45. Not mounting FM1202 device inside door of the car

2. **FM1202 device cannot be mounted inside the vehicle!**

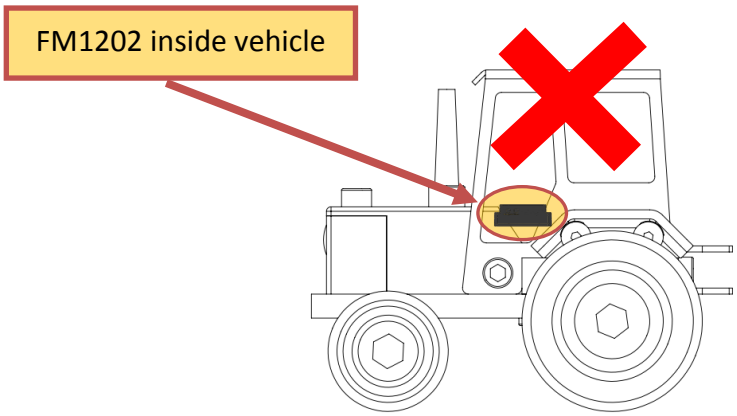

Figure 46. Not mount device inside the vehicle

Connecting power wires

1. Device should be connected directly to battery. Power supply: 6V/12V/24V.

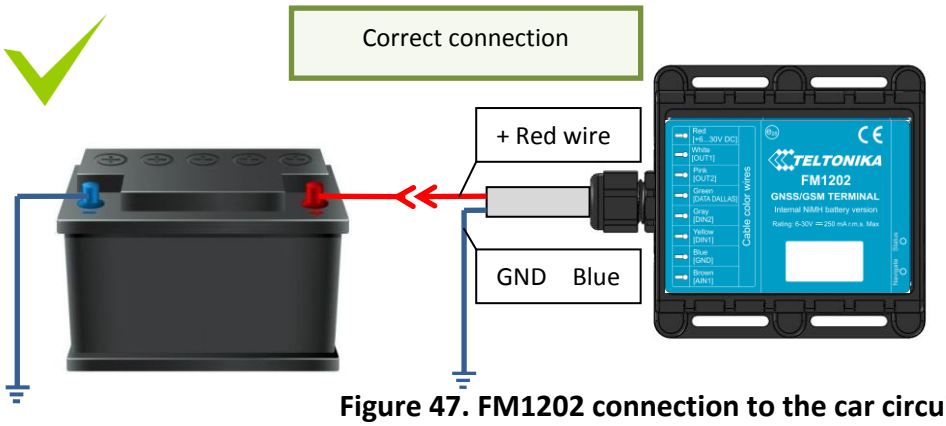

Figure 47. FM1202 connection to the car circuit

2. Prohibits the use of the device disconnected from the vehicle circuit

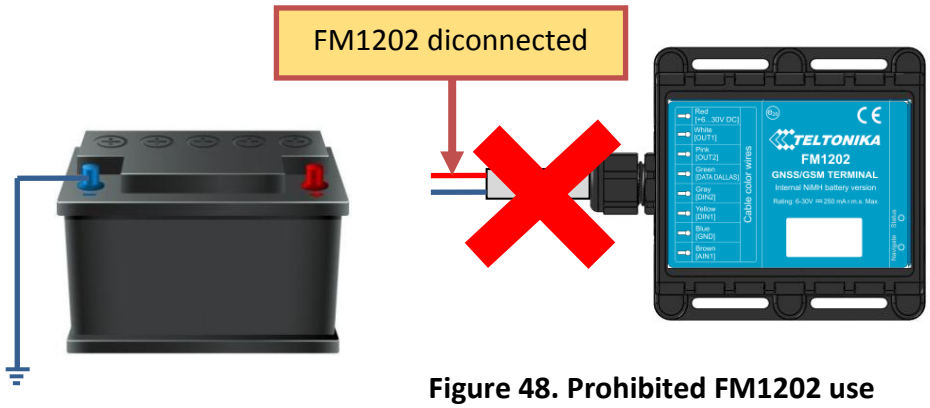

Figure 48. Prohibited FM1202 use

3. If FM1202 is used in 6V system and power cables are extended.

Extension cable resistance should be less than 60 mΩ in sum of both, positive and negative, wires.

30 mΩ for single wire.

Other recommendations

1. If using Eco driving function device should be mounted horizontally to work properly, see Figure 43 and 44.

2. If the vehicle is not used for a half of month or more it is recommended to disconnect FM1202 to save vehicle battery.

11 Downloading log using “Hercules”

1 STEP:

- set special chars – ASCII
- Set PORT and start listen (screen below)

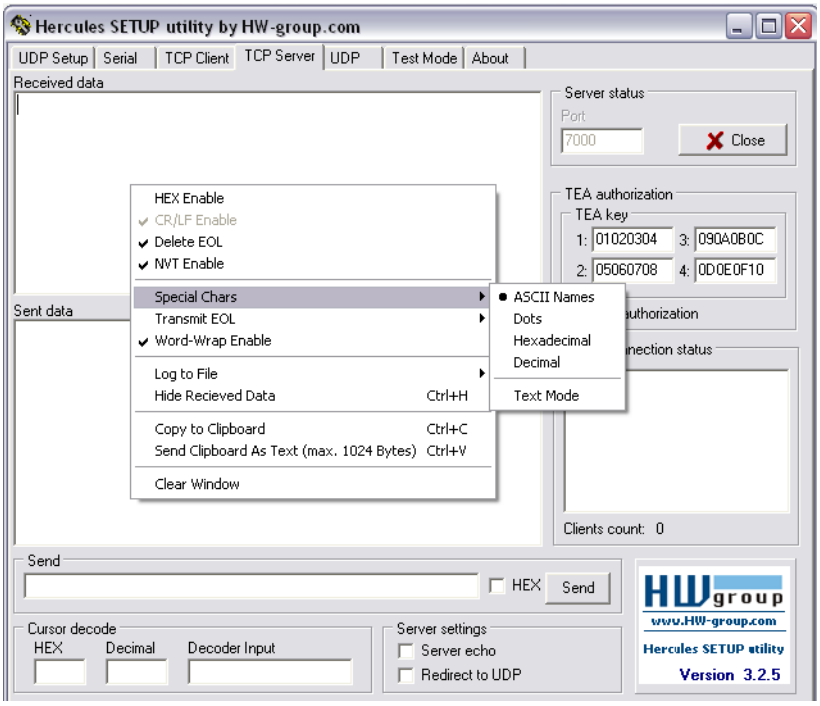

2 STEP:

- Set directory for file download
- Enable “Log to file” as show below

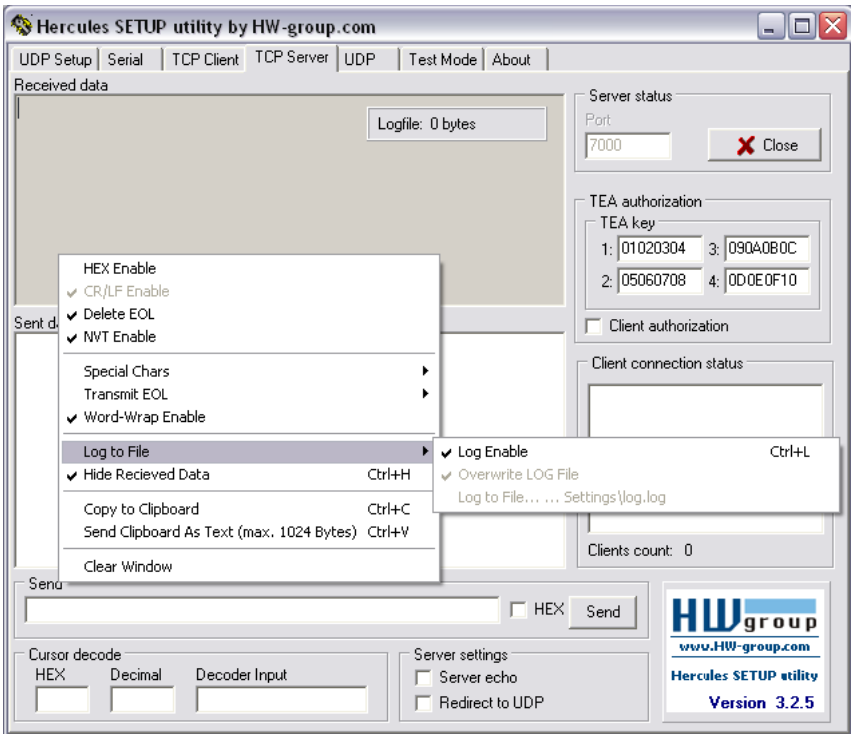

3 STEP:
“Terminal” Command sending using Hercules

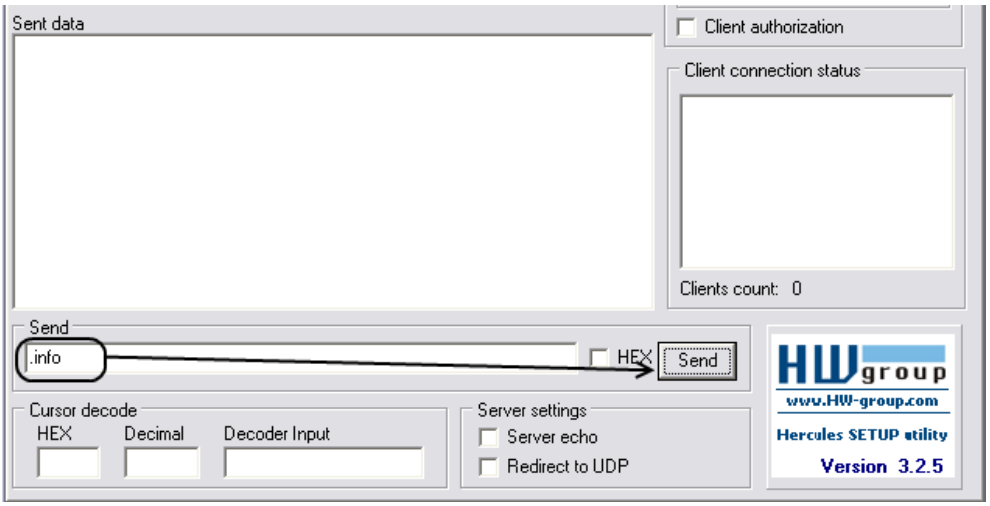

12 CHANGE LOG

Nr.	Date	Version	Comments
1	2014.02.24	0.1	Draft Document created
2	2014.03.24	1.00	Document released
3	2014.06.04	1.01	Change pic. Immobilizer relay connection
4	2014.07.23	1.02	IO elements (Battery voltage, Battery current) added in parameter list