FM4100 User Manual

V3.0

Contents

1 INTRODUCTION 5

1.1 ATTENTION 5
1.2 INSTRUCTIONS OF SAFETY 5
1.3 LEGAL NOTICE 6
1.4 ABOUT DOCUMENT 6

2 BASIC DESCRIPTION 7

2.1 PACKAGE CONTENTS 7
2.2 ADDITIONAL ACCESSORIES 7
2.3 BASIC CHARACTERISTICS 7
2.4 MECHANICAL FEATURES 9

3 CONNECTION, PINOUT, ACCESSORIES 12

3.1 LED STATUS 12
3.2 SOCKET 2X10 13
3.3 PORT1/NMEA 16
3.4 AUDIO 16
3.5 ACCESSORIES 16

4 FIRMWARE 21

5 OPERATIONAL BASICS 23

5.1 OPERATIONAL PRINCIPALS 23
5.2 SLEEP MODE 23
5.3 ACCELEROMETER 23
5.4 VIRTUAL ODOMETER 24
5.5 VOICE FUNCTIONALITY 24
5.6 PROFILES 24
5.7 PROFILE SWITCH DEPENDING ON GSM OPERATOR CODE 25
5.8 PROFILE SWITCH DEPENDING ON I/O EVENT 26

6 CONFIGURATION 27

6.1 CONFIGURATOR 27
6.2 GLOBAL PARAMETER SETTINGS 30
6.3 TEMPERATURE SENSORS 30
6.4 SYSTEM SETTINGS 31
6.5 GPS SETTINGS 32
6.6 GEOFENCE SETTINGS 33
6.7 GSM SETTINGS 35
6.8 GPRS SETTINGS 35
6.9 SMS SETTINGS 35
6.10 SEND PARAMETER SETTINGS 36
6.11 ACCELEROMETER 37
6.12 I/O SETTINGS 37
6.12.1 Monitoring 40
6.12.2 Event Generating 40
6.13 CAN SETTINGS 42

7 SMS COMMAND LIST 47

7.1 GETSTATUS 49
7.2 GETWEEKTIME 49
7.3 GETOPS 49
7.4 GETCFGTIME 49
7.5 GETGPS 50
7.6 LOADPROFILE# 50
7.7 GETVER 50
7.8 GETSTACK 50
7.9 GETIO 50
7.10 GETINFO 51
7.11 READIO # 51

7.12 SETDIGOUT #### 51
7.13 GETPARAM #### 51
7.14 SETPARAM #### # 52
7.15 FLUSH #,#,#,#,#,#,# 52

8 PARAMETER LIST 53

8.1 PARAMETERS VALUE TYPES 53
8.2 GLOBAL PARAMETERS 53
8.2.1 Profile switch (ID=100) 53
8.2.2 Microphone level (ID=101) 53
8.2.3 Speaker level (ID=102) 53
8.2.4 Call number (ID 103) 53
8.2.5 Call trigger (ID 104) 54
8.2.6 Record search (ID 105) 54
8.3 DATA ACQUISITION AND SENDING PARAMETERS 54
8.3.1 Time based acquire interval (ID=11) 54
8.3.2 Distance based acquire interval (ID=12) 54
8.3.3 Angle based coordinate acquisition (ID=13) 54
8.3.4 Data Send interval (ID=270) 55
8.3.5 Minimum records number in packet (ID=232) 55
8.3.6 GPRS Enable (ID=240) 55
8.3.7 GSM Operator list (ID=271) 55
8.3.8 GPRS Data send week time schedule (ID=272) 56
8.3.9 SMS Data send week time schedule (ID=273) 56
8.3.10 Schedule parameter format: 56
8.3.11 SMS Data send allow (ID=250) 56
8.3.12 SMS Send Timeout (ID=251) 56
8.3.13 24 Records time step (ID=274) 57
8.4 SMS SETTINGS AND PARAMETERS 57
8.4.1 SMS User login (ID=252) 57
8.4.2 SMS User password (ID=253) 57
8.4.3 Server Number (ID=260) 57
8.4.4 Authorized Number #1 (ID=261) 57
8.5 GPRS ACCESS AND ADDRESS SETTINGS 58
8.5.1 APN Name (ID=242) 58
8.5.2 APN username (ID=243) 58
8.5.3 APN Password (ID=244) 58
8.5.4 Data send protocol (ID=231) 58
8.5.5 Server IP address (ID=245) 58
8.5.6 Server port number (ID=246) 58
8.6 GEOFENCE ZONES SETTINGS AND PARAMETERS 59
8.6.1 GeoFence border width (ID=20) 59
8.6.2 GeoFence Zone #1 Configuration Parameter (ID=30) 59
8.6.3 GeoFence x1 (ID=31) 59
8.6.4 GeoFence y1 (ID=32) 60
8.6.5 GeoFence x2 (ID=33) 60
8.6.6 GeoFence y2 (ID=34) 60
8.6.7 All the rest zones 60
8.7 SYSTEM PARAMETERS 61
8.7.1 Voice Call Auto Answer after rings (ID=230) 61
8.7.2 Device Power mode (ID=0) 61
8.7.3 GPS Enable (ID=10) 61
8.7.4 Profile name (ID=710) 61
8.7.5 Sleep mode (ID=000) 62
8.8 IO PROPERTIES 62
8.8.1 IO#0 property parameter (ID=300) 62
8.8.2 IO#0 priority (ID=301) 62
8.8.3 IO#0 High level (ID=302) 62
8.8.4 IO#0 Low level (ID=303) 63
8.8.5 IO#0 logic operand (ID=304) 63

8.8.6 IO#0 averaging length (ID=305) 63
8.9 CAN (FMS) INTERFACE PARAMETERS 64
8.9.1 CAN Baud Rate (ID=600) 64
8.9.2 CAN#0 Element Id type (ID=610) 64
8.9.3 CAN#0 Data mask (ID=611) 64
8.9.4 CAN#0 Identifier ID (ID=612) 65
8.9.5 CAN#0 Identifier Mask ID (ID=613) 65
8.10 ACCELEROMETER PARAMETERS 65
8.10.1 Delta X (ID=281) 65
8.10.2 Delta Y (ID=282) 66
8.10.3 Delta Y (ID=283) 66
8.10.4 Start timeout (ID=284) 66
8.10.5 Stop timeout (ID=285) 66

9 DEBUG MODE 67

10 MOUNTING RECOMMENDATIONS 68

10.1 CONNECTING WIRES 68
10.2 CONNECTING POWER SOURCE 68
10.3 CONNECTING IGNITION WIRE 68
10.4 CONNECTING GROUND WIRE 68
10.5 CONNECTING ANTENNAS 68
10.6 MODULE INSTALLATION 69

11 CHANGE LOG 70

1 INTRODUCTION

1.1 Attention

Do not disassemble the device. If the device is damaged, the power supply cables are not isolated or the isolation is damaged, before unplugging the power supply, do not touch the device.

All wireless data transferring devices produce interference that may affect other devices which are placed nearby.

The device may be connected only by qualified personnel.

The device must be firmly fastened in the predefined location.

The programming must be performed using a second class PC (with autonomic power supply).

The device is susceptible to water and humidity.

Warning! If wrong accumulator is used, the device may explode!

Any installation and/or handling during a lightning storm is prohibited.

Please use cables provided with FM4100 device.
Teltonika is not responsible for any harm caused by using wrong cables for PC <-> FM4100 connection.

1.2 Instructions of safety

This chapter contains information on how to operate FM2200 safely. By following these requirements and recommendations, you will avoid dangerous situations. You must read these instructions carefully and follow them strictly before operating the device!
The device uses a 10V...30V DC power supply. The nominal voltage is 24V DC. The allowed range of voltage is 10V...30V DC, power – not more than 12 W.

To avoid mechanical damage, it is advised to transport the FM4100 device in an impact-proof package. Before usage, the device should be placed so that its LED indicators are visible, which show the status of operation the device is in.

When connecting the connection (2x10) cables to the vehicle, the appropriate jumpers of the power supply of the vehicle should be disconnected.

Before dismounting the device from the vehicle, the 1x6 connection must be disconnected.

The device is designed to be mounted in a zone of limited access, which is inaccessible for the operator. All related devices must meet the requirements of standard EN 60950-1.
The device FM4100 is not designed as a navigational device for boats.

1.3 Legal Notice

Copyright © 2008 Teltonika. All rights reserved. Reproduction, transfer, distribution or storage of part or all of the contents in this document in any form without the prior written permission of Teltonika is prohibited.

Other products and company names mentioned here may be trademarks or trade names of their respective owners.

1.4 About document

This document contains information about the architecture, possibilities, mechanical characteristics, and configuration of the FM2200 device.
Acronyms and terms used in document

- PC – Personal Computer.
- GPRS – General Packet Radio Service.
- GPS – Global Positioning System.
- GSM – Global System for Mobile Communications.
- SMS – Short Message Service.
- AC/DC – Alternating Current/Direct Current.
- Record – AVL data stored in FM4100 memory. AVL data contains GPS and I/O information
- AVL packet - Data packet that is being sent to server during data transmission. AVL packet contains from 1 to 25 records.

2 BASIC DESCRIPTION

FM4100 is a terminal with GPS and GSM connectivity, which is able to determine the object's coordinates and transfer them via the GSM network. This device is perfectly suitable for applications where location acquirement of remote objects is needed. It is important to mention that FM4100 has additional inputs and outputs, which let you control and monitor other devices on remote objects. 1-Wire® interface (for Dallas digital thermometer or I-Button reader) and CAN interface integrated (for trucks FMS interface data acquisition). It also has a RS232 port for NMEA output and configuration (also it could be used for peripheral devices communication with special firmware).

2.1 Package contents

The FM4100 device is supplied to the customer in a cardboard box containing all the equipment that is necessary for operation. The package contains:

1. The FM4100 device.
2. Input and output power supply cable with a 2x10 connection.
3. GPS and GSM antennas.
4. Port ½ and Port 3 cables
5.

2.2 Additional accessories

There are two accessories available for FM4 that are not included in the package:

1. Temperature sensor TTJ-101
2. iButton

Note: the manufacturer does not supply a SIM card in the package, which is necessary for connection to the GSM network! SIM card can be obtained from your local GSM service provider!

If any of the components are not in the package, please contact the manufacturer's representative or the vendor. (www.teltonika.eu)

2.3 Basic characteristics

GSM / GPRS features:

- Teltonika TM2 quad band module (850, 900, 1800, 1900 MHz)
- GPRS class 10
- SMS (text, data)
- Voice calling

GPS features:

- SirfStarIII 20 channel receiver
- NMEA, GGA, GGL, GSA, GSV, RMC, WGS-84 protocol compatible
- -159 dBm sensitivity

Hardware features:

- ARM7 TDMI processor

- 1 MB internal Flash memory (upgradeable up to 4 MB)
- Built-in CAN-BUS support (J1939 / FMS protocol)
- Built-in 3 axis accelerometer
- Internal backup battery included

Interface features:

- Power supply: 10 – 30V
- RS232 port
- Audio port
- 4 digital inputs
- 4 analog inputs
- 4 open collector outputs
- Fuel counter inputs
- 1Wire® temperature sensor
- 1Wire® iButton
- External battery input
- 3 status LEDs

Special features:

- Any element event triggers (external sensor, input, speed, temperature, etc.)
- Smart profile switching (GSM operator or any element dependant)
- Highly configurable data acquisition and sending
- Multiple geofence areas
- Sleep mode
- Real-time process monitoring
- Authorized number list for remote access
- Firmware update via GPRS or RS232 port
- Configuration update via GPRS, SMS or RS232 port
- TCP/IP or UDP/IP protocol support
- 7500 record storing (upgradeable up to 30000)
- Robust aluminum case (100 x 85.7 x 36.9)
- CE and e-mark certified

2.4 Mechanical features

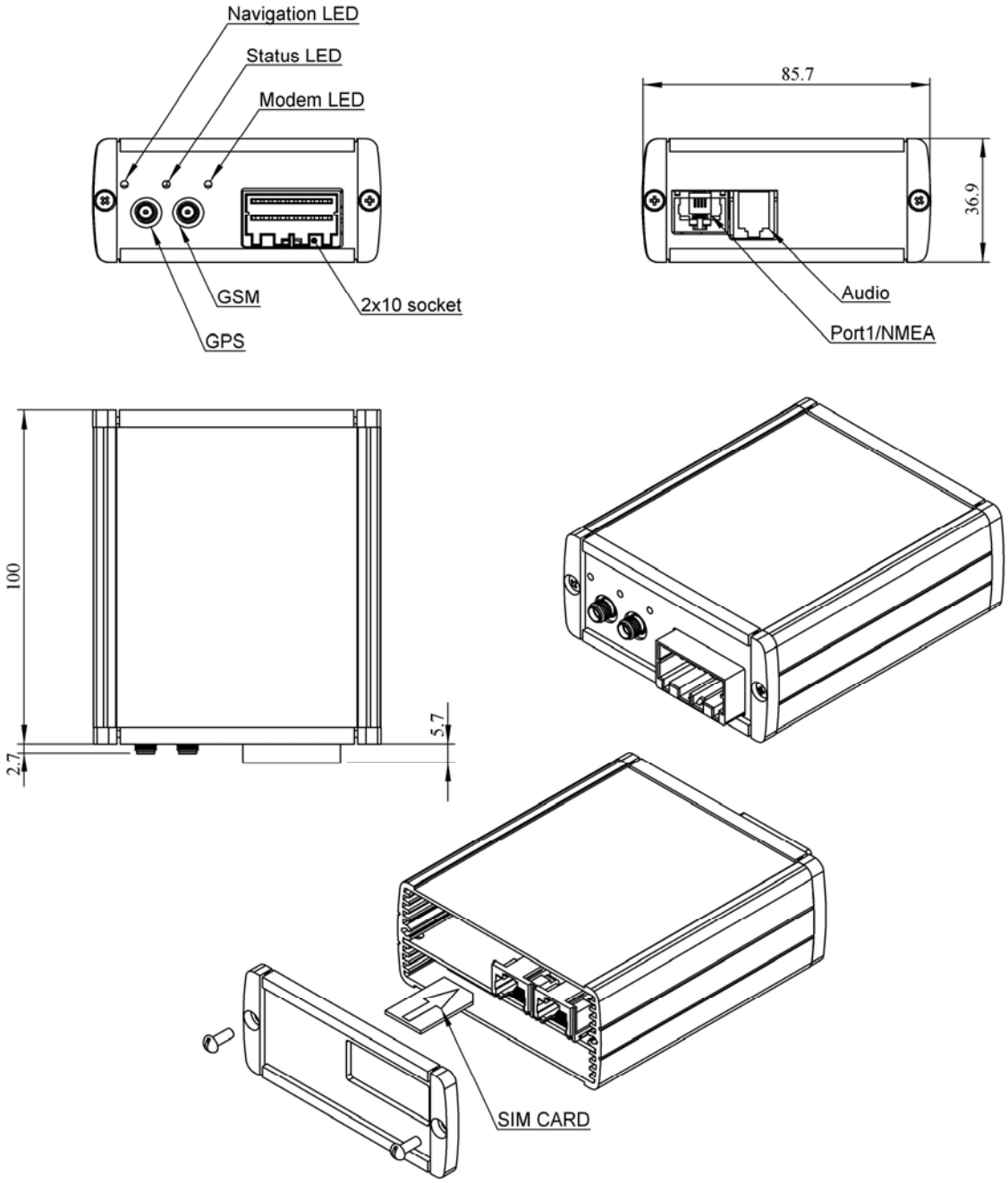

All the dimensions in millimeters, tolerance ± 0.5 mm

OR

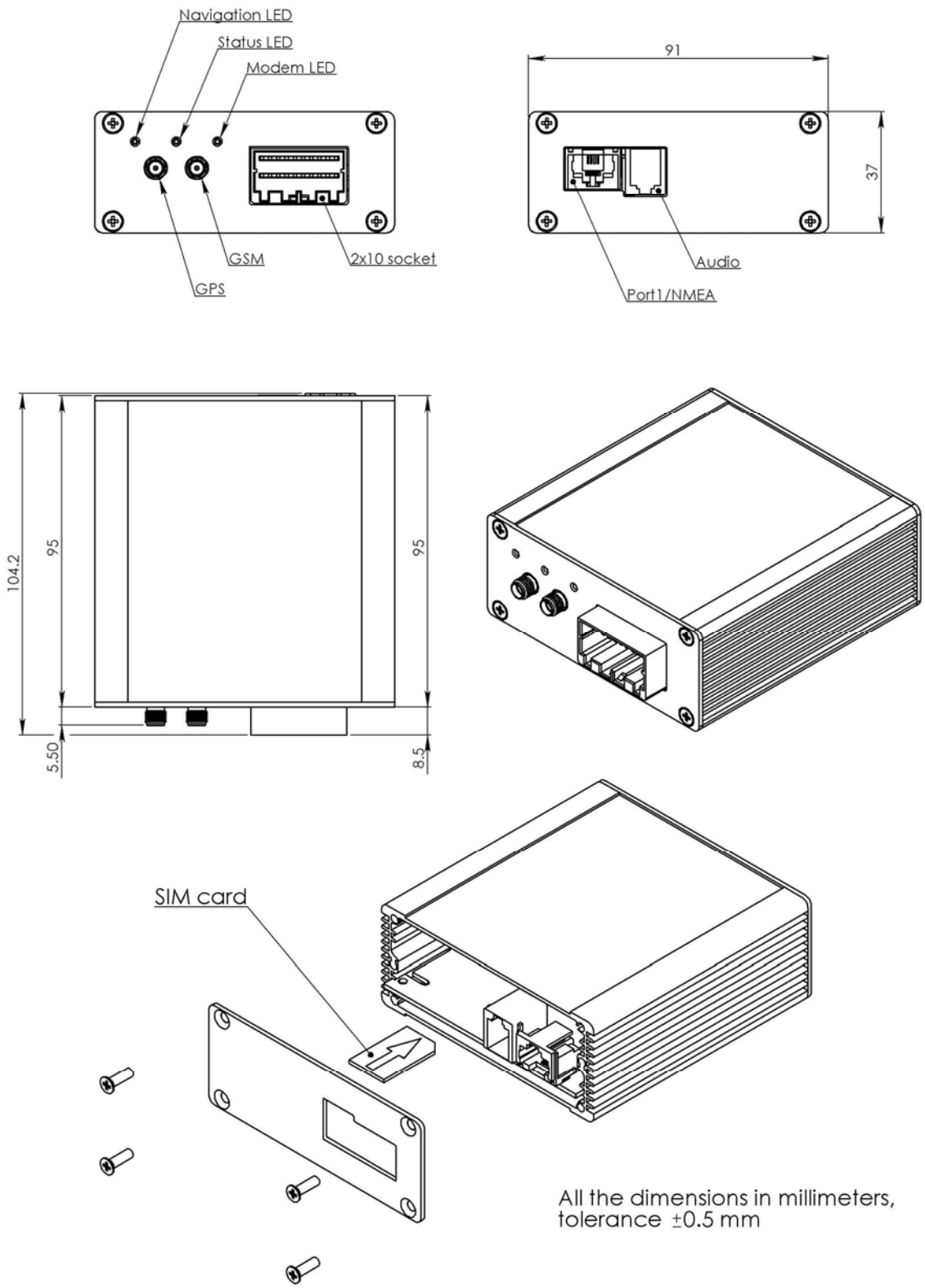

1 Figure FM4100 drawing & spec, two enclosures

Part name	Physical specification
Navigation LED	LED
STATUS LED	LED
MODEM LED	LED
GSM	GSM antenna connector SMA
GPS	GPS antenna connector SMA
Socket 2×10	Tyco Multi-Lock I/O MK-II C-175975
SIM	GSM SIM card socket
PORT 1/NMEA	RJ45 8 pin socket
AUDIO	RJ11 4 pin socket

Technical details
Power supply 12..30 V DC 12W Max Energy consumption: GPRS: ⎓ 250 mA r.m.s Max., Nominal: ⎓ 110 mA r.m.s.. Sleep: ⎓ 45 mA r.m.s.. Operation temperature: -25°C ... +55°C Storage temperature: -40°C ... +70°C Relative humidity 5 ... 95%

3 CONNECTION, PINOUT, ACCESSORIES

3.1 LED status

Navigation LED

When GPS signal is not received or GPS signal is not accurate, the **Navigation LED** is blinking as follows:

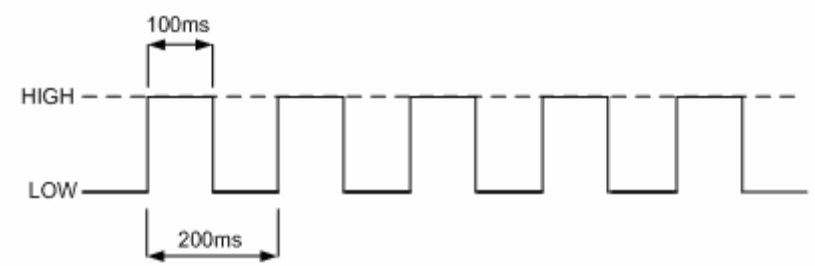

When accurate GPS signal is received, the Navigation LED is blinking as follows:

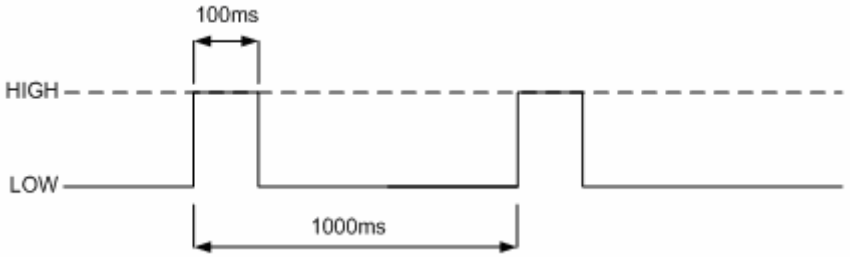

When Navigation LED is off, that means that a short circuit occurred in GPS antenna or connector.

Modem LED

When device is connected to the GPRS – Modem LED is blinking every second:

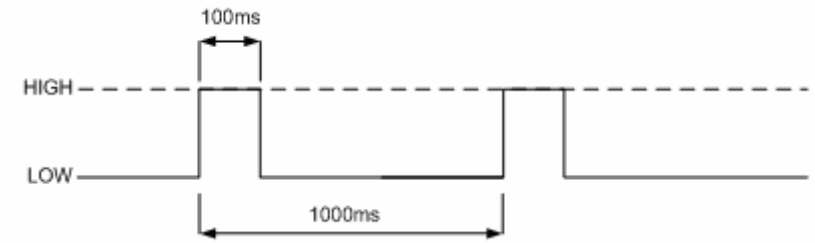

When device is not connected to GPRS – Modem LED is blinking every 5 seconds.

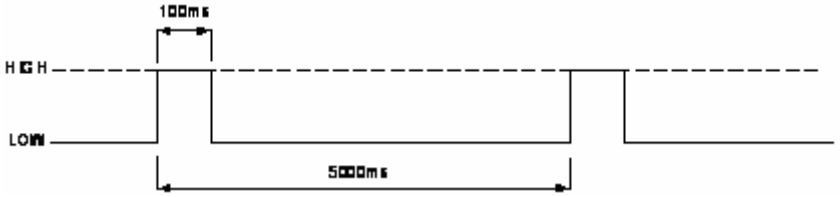

Status LED

When device has uploaded firmware – Status LED should blink. If LED does not blink – it means that device does not function.

3.2 Socket 2x10

Standard FM4100 2x10 socket pinout shown on 2 Figure Standard FM4100 2x10 socket pinout

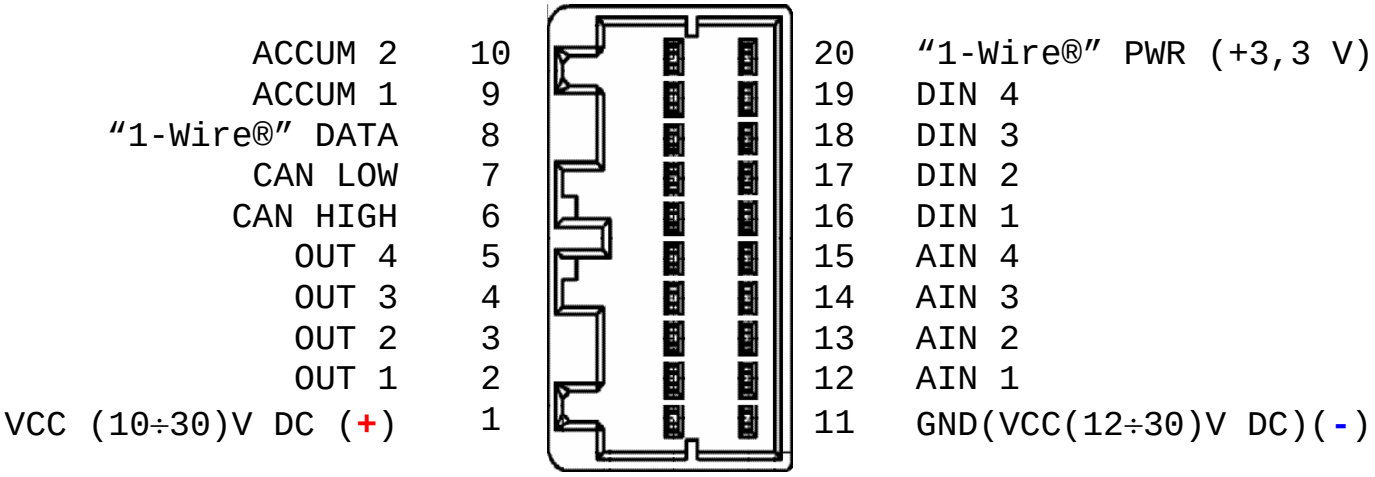

2 Figure Standard FM4100 2x10 socket pinout

Standard FM4100 2x10 socket pinout description:

Pin Nr.	Pin Name	Description
1	*2*	*3*
1	VCC (10÷30)V DC (+)	Power supply for module. Power supply range (12...30) V DC Energy consumption: GPRS: ⎓ 400 mA r.m.s Max., Nominal: ⎓ 150 mA r.m.s..
2	OUT 1	Digital output. Channel 1. Open collector output. Max. ⎓ 500mA.
3	OUT 2	Digital output. Channel 2. Open collector output. Max. ⎓ 500mA.
4	OUT 3	Digital output. Channel 3. Open collector output. Max. ⎓ 500mA.
5	OUT 4	Digital output. Channel 4. Open collector output. Max. ⎓ 500mA.
6	CAN HIGH	SAE J1939 CAN interface High channel
7	CAN LOW	SAE J1939 CAN interface Low channel
8	"1-Wire®" DATA	Data channel for Dallas 1-Wire® devices
9	Ext accumulator "-"	This pin is used connected with pin ACUM 2. Function of those pins is to disconnect the internal accumulator during shipment or storage. When ACUM 1 and ACUM 2 are connected, the internal accumulator is on, while disconnected – the internal accumulator is off.
10	Ext accumulator "+"	This pin is used connected with pin ACUM 1. Function of those pins is to disconnect the internal accumulator during shipment or storage. When ACUM 1 and ACUM 2 are connected, the internal accumulator is on, while disconnected – the internal accumulator is off.
11	GND(VCC(10÷30)V DC)(-)	Ground pin. (10÷30)V DC (-)
12	AIN 1	Analog input, channel 1. Input range: 0-30V DC
13	AIN 2	Analog input, channel 2. Input range: 0-30V DC
14	AIN 3	Analog input, channel 3. Input range: 0-30V DC.
15	AIN 4	Analog input, channel 4. Input range: 0-30V DC
16	DIN 1	Digital input, channel 1
17	DIN 2	Digital input, channel 2
18	DIN 3	Digital input, channel 3
19	DIN 4	Digital input, channel 4
20	"1-Wire®" PWR (+3,3 V)	+ 3,3 V output for Dallas 1-Wire® devices. (max 20mA)

There is special version of FM4100 which allow to connect additional external backup battery. This device version should be purchased by special order. Contact sales manager for details.

Special FM4100 version 2x10 socket pinout shown on 3 Figure Special FM4100 version pinout.

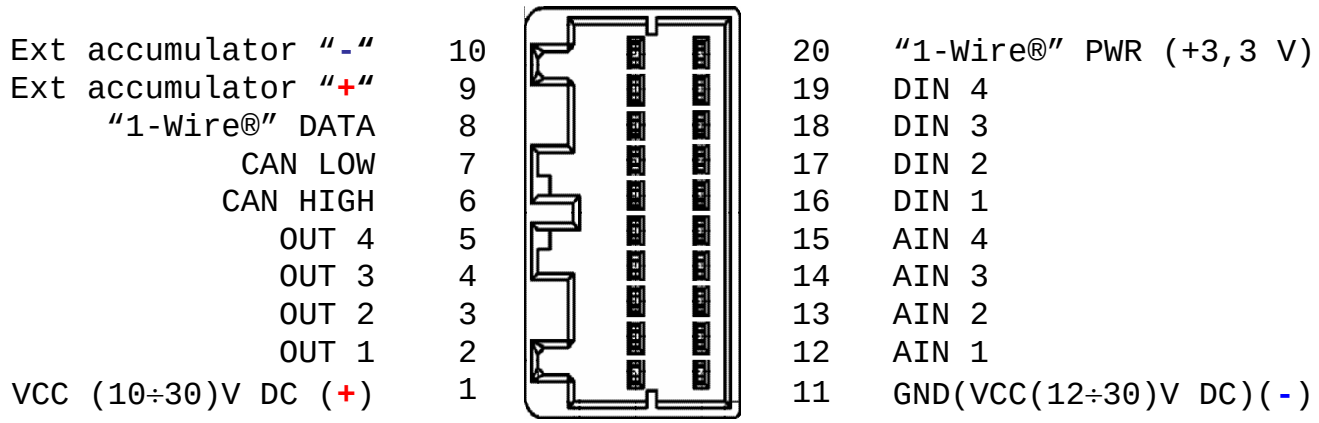

3 Figure Special FM4100 version pinout

Special FM4100 2x10 socket pinout description:

Pin Nr.	Pin Name	Description
1	*2*	*3*
1	VCC (10÷30)V DC (+)	Power supply for module. Power supply range (12...30) V DC Energy consumption: GPRS: ⎓ 400 mA r.m.s Max., Nominal: ⎓ 150 mA r.m.s..
2	OUT 1	Digital output. Channel 1. Open collector output. Max. ⎓ 500mA.
3	OUT 2	Digital output. Channel 2. Open collector output. Max. ⎓ 500mA.
4	OUT 3	Digital output. Channel 3. Open collector output. Max. ⎓ 500mA.
5	OUT 4	Digital output. Channel 4. Open collector output. Max. ⎓ 500mA.
6	CAN HIGH	SAE J1939 CAN interface High channel
7	CAN LOW	SAE J1939 CAN interface Low channel
8	"1-Wire®" DATA	Data channel for Dallas 1-Wire® devices
9	Ext accumulator "-"	This pin is used for connecting external accumulator (Seal lead rechargeable 6V only). Should be connected to negative pole (-)
10	Ext accumulator "+"	This pin is used for connecting external accumulator (Seal lead rechargeable only). Should be connected to positive pole (+)
11	GND(VCC(10÷30)V DC)(-)	Ground pin. (10÷30)V DC (-)
12	AIN 1	Analog input, channel 1. Input range: 0-30V DC
13	AIN 2	Analog input, channel 2. Input range: 0-30V DC
14	AIN 3	Analog input, channel 3. Input range: 0-30V DC.
15	AIN 4	Analog input, channel 4. Input range: 0-30V DC
16	DIN 1	Digital input, channel 1
17	DIN 2	Digital input, channel 2
18	DIN 3	Digital input, channel 3
19	DIN 4	Digital input, channel 4
20	"1-Wire®" PWR (+3,3 V)	+ 3,3 V output for Dallas 1-Wire® devices. (max 20mA)

Technical information:

Maximum charge curent 300 mA @ 6V.Operating from backup accumulator turns on if external power supply is less then 6,5 V
Accumulator is operating up to 5.2 V. If accumulator's voltage decrease to 5,1 turns FM4 off.

Attention – it is possible to start FM4100 device only from external power supply. Only after external supply is off – FM4100 is operating from backup accumulator.

Charge intervals

Operating time depends on temperature, data sending frequency (SMS and GPRS), and accumulator age, number of charge/discharge cycles.

Approximate time of charging fully discharged 1,4 Ah accumulator (24° C temperature, external power 12 v) 10 hours.

Attention! FM4100 should be connected only with 6 V Sealed lead rechargeable batteries (accumulators). Teltonika is not responsible for any harm caused by using wrong accumulator type.

Power sonic Sealed lead Acid batteries 6V
PS – 605 (0.5 Ah)
PS – 612 (1.4 Ah)
PS – 628 (2.9 Ah)

External battery

Operation (discharge) temperature -40° C …+60° C (check with accumulator datasheet)

Operation (charge) temperature -20° C …+50° C (check with accumulator datasheet)
Connecting any capacity 6V accumulator due to customer's needs of backup operation time. Time of charging the accumulator increases while using the accumulator with higher capacity. It is recommended to use accumulators less then 11 Ah capacity.

3.3 PORT1/NMEA

RJ-45 socket	PORT 1	
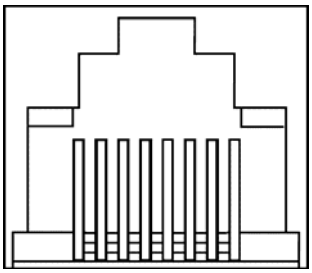 8 7 6 5 4 3 2 1	**Pin Nr.**	**Description**
	1	GPS_IN (Sirf In)
	2	TX_GPS (NMEA)
	3	-
	4	GND
	5	RX
	6	TX
	7	CTS
	8	RTS

4 Figure RJ-45 Socket pinout

This port can be used as system port (for firmware flashing, device configuration, viewing log) with cable labeled "Port1/2" and as GPS NMEA 0183 output with cable labeled "Port 3" at 4800 baud rate.

3.4 Audio

RJ-11 socket	AUDIO PORT	
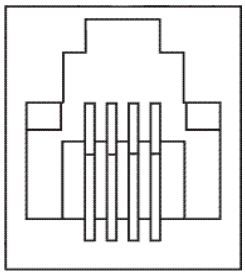 1 2 3 4	**Pin Nr.**	**Description**
	1	Mic_Signal
	2	Speaker_Out_2
	3	Speaker_Out_1
	4	Mic_GND

5 Figure RJ-11 socket pinout

3.5 Accessories

Note: Teltonika doesn't provide any additional equipment like panic buttons, door sensors or other, except of 1 – wire devices: TTJ-101 thermo sensor and I-Button. These devices aren't included in FM4100 package and can be offered by special order only.

1 – Wire devices

One of the FM4100 features is realized 1-Wire data protocol, which enables connection of up to three thermometers (DS1820, DS18S20 and DS18B20) and I-Button DS1990A. Figures 6 and 7 show FM4100 and 1-wire devices connection schemes.

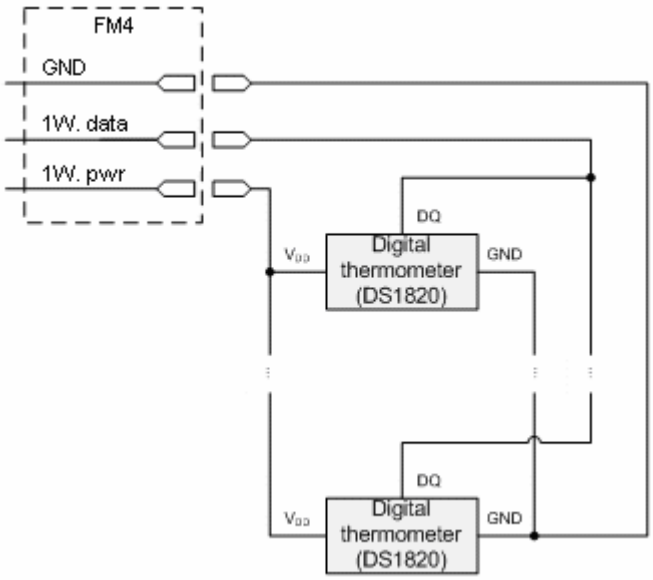

Left row of pins

Connected through 100 Ohm to 1 on right row (FM4100 – 20 pin)	1
Data (to 1-Wire® Dallas) (FM4100 – 8 pin)	2
GND (FM4100 – 11 pin)	3
Digital Input	4

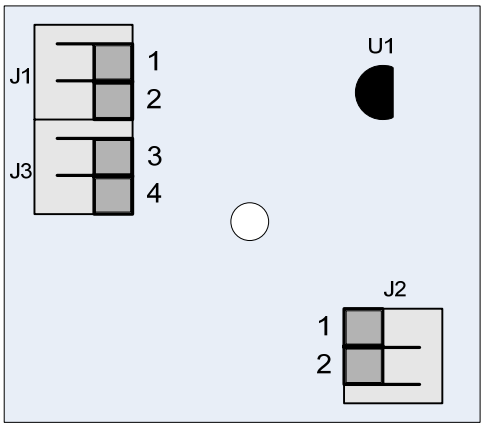

Right row of pins

1	Vpp (+5 Volts DC) – power source for external digital sensor
2	Output from external digital sensor

6 Figure Digital thermometer DS1820 and TTJ 100 connection scheme

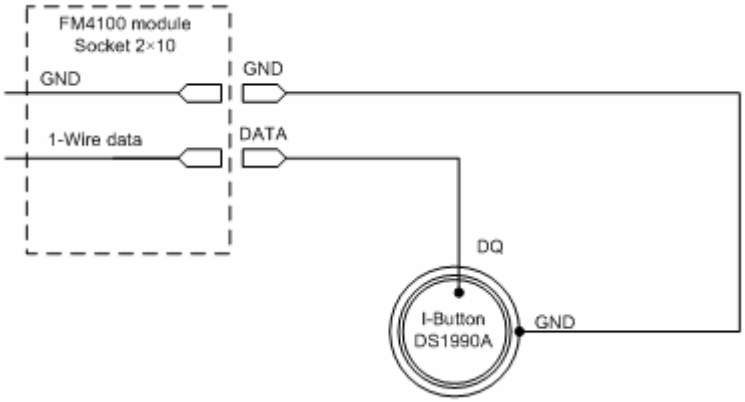

7 Figure Digital key "I-Button" DS1990A connection scheme

Fuel Tank sensors

A fuel tank level sensor exists in most of the cars, which shows the approximate fuel level in the driver's indicator panel. It is possible to connect FM4100 Analog input (if sensor returns analogue signal proportional to fuel level). Figure describes the connection scheme to the FM4100 and fuel tank sensor. After the connection to the tank fuel level sensor, calibration is needed. Calibrations needed due of the fact that most fuel tank sensors are not linear. Calibration is being performing by measuring voltage dependence on volume of fuel in tank.

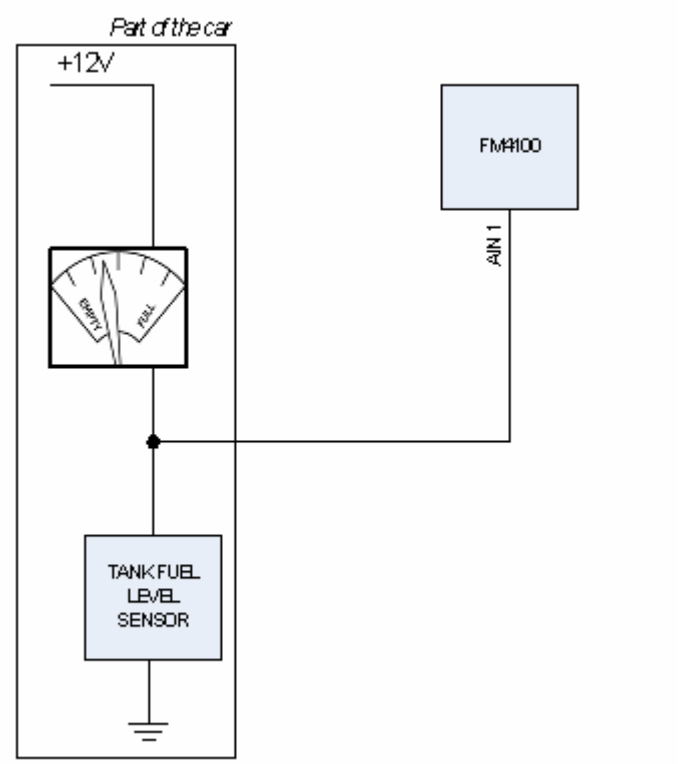

Note: Teltonika does not provide any fuel sensors. Factory installed or other third party sensors may be used instead.

Impulse counters

Figure describes the connection scheme to the FM4100. Here two pulse meters are used, where one is mounted on the direct flow pipe and the other on the return flow pipe. Data from both meters is sent to the FM4100. Then FM4100 calculates DIN3-DIN4. Resulting difference equals to fuel consumption. Filter should be used on the direct flow pipe to prevent any damage caused by impurities in the liquid. The filter mounted in the meter inlet is only a safety filter and it is too small to act as a strainer.

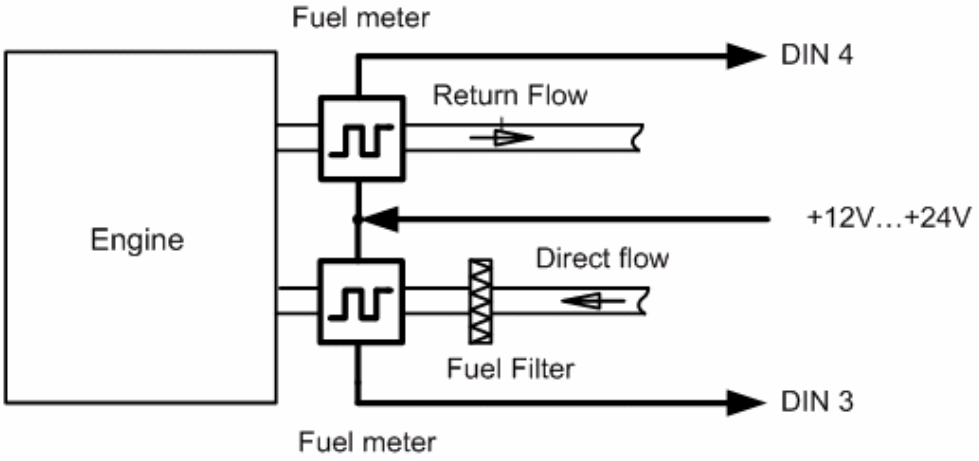

8 Figure Pulse fuel meters connection scheme

Alarm buttons, door sensors, etc

Alarm buttons, door sensors, ignition, etc return two states: high or low voltage. Digital inputs should be used to read this information. Figure below shows how to connect alarm button, door sensor, etc.

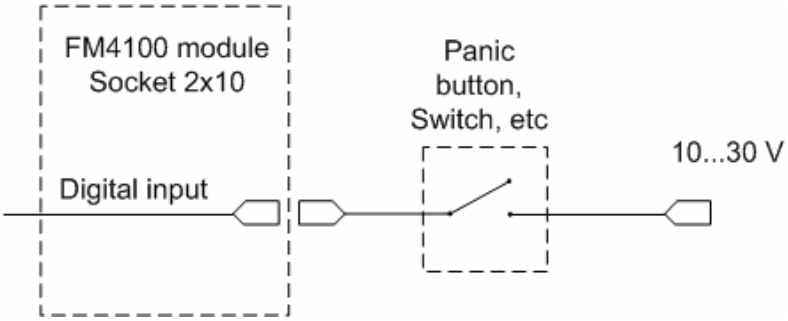

9 Figure Panic button connection

In cases when sensor output signal is negative an additional relay has to be installed to convert negative signal to positive.

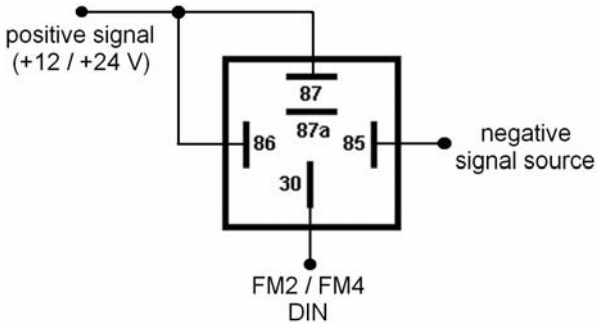

10 Figure Inverting relay connection

Immobilizer relay

When connected a shown below, FM4 disables engine starter when output is ON. More details about relays can be found below.

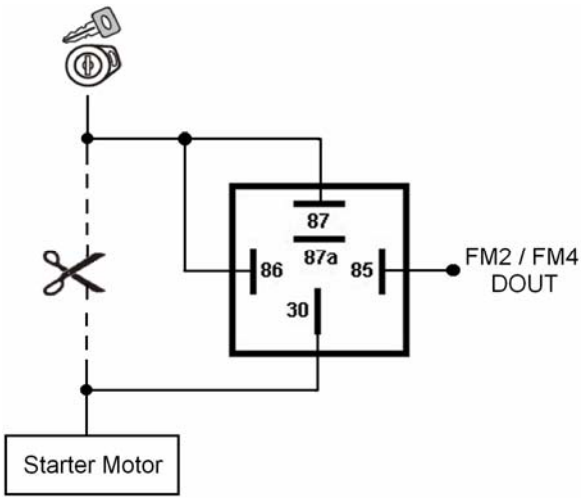

11 Figure Immobilizer relay connection

Relays

A simple automotive relays is used to invert input signal or to immobilize engine starter. Note, that they are available as 12 or 24 Volt.

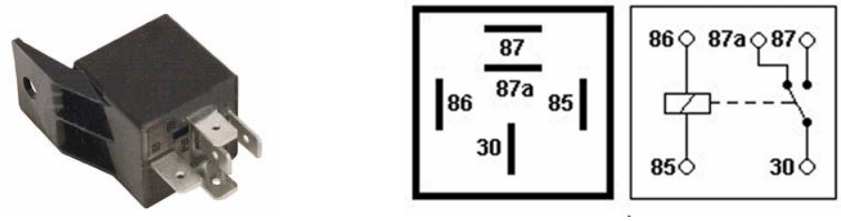

12 Figure Relay pinout

4 FIRMWARE

FM4 is powered with smart firmware. FM4 functionality is always improving, new firmware versions appear. Current module firmware version can be retrieved from configurator. See configuration description for details.

To update the firmware launch configurator, click 'Connect' and click 'Load CPU FW via PORT 1/2' button. In the new window navigate to firmware file with .CFW extension and click 'Open'. Firmware update will start automatically.

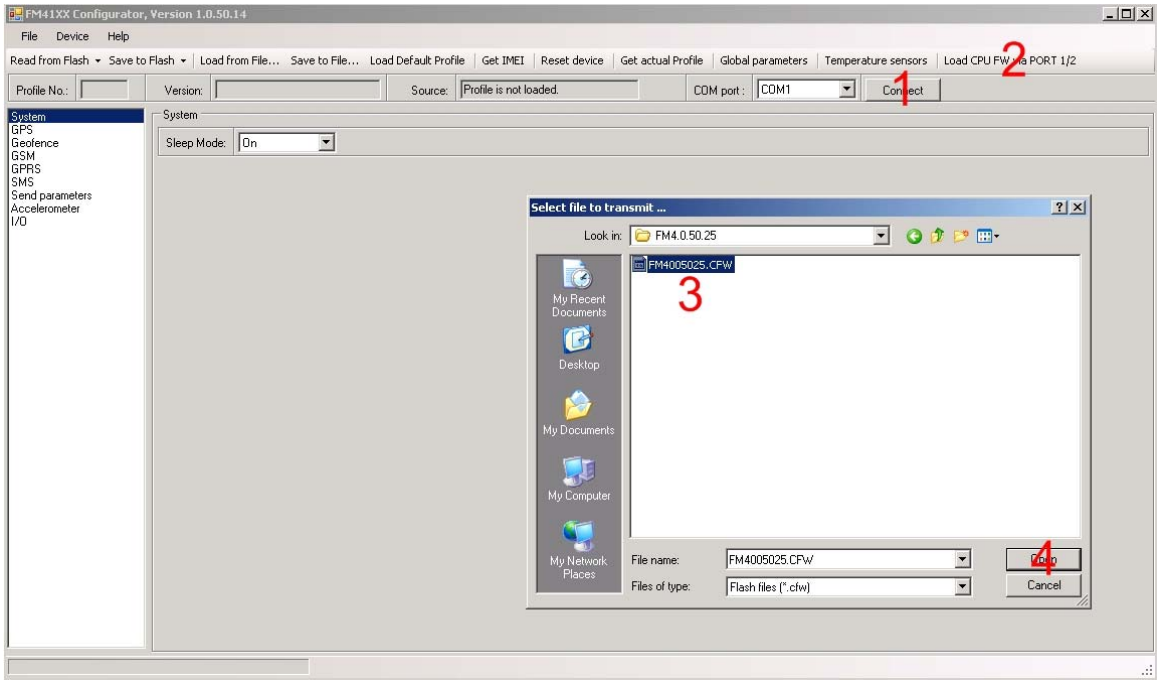

Firmware can also be updated by RILS system over GPRS.

RILS stands for Remote Imlet Loading System, which is used to update FM4100 ARM processor firmware. In order to update firmware, server sends a SMS to the FM4100 and directs it to connect to the server and download new firmware. The special web interface is used for this operation. Address of the web application is:

http://212.47.99.62:5002/RILS-web/

Login and password for the RILS are 'demo' / 'demo'.

After entering them click on 'Upload FM4' and select latest firmware version available. Enter necessary parameters in the fields:

- Server IP: 212.47.99.62
- Server port: 5009
- Module number is GSM number of FM SIM in worldwide standard, for example: *+37069912345*.

Enter your APN, APN (chap) login and password. After entering all parameters, click 'Add Module'. To operate multiple devices, enter new IMEI and GSM number and click 'Add Module' again. Otherwise click 'Next' and if all data is correct, in next window click 'Upload'.

5 OPERATIONAL BASICS

5.1 Operational principals

FM4100 module is designed to acquire records and send them to server. Records contain GPS and I/O information. Module uses GPS receiver to acquire GPS data and is powered with 3 data acquire methods: time-based, distance-based, angle-based methods. Method's details are described in **GPS** section. All data is stored in flash memory and later can be sent via GPRS or SMS channels. GPRS mode is most preferred data sending mode. SMS mode is mostly used in areas without GPRS coverage or GPRS usage is too expensive.

GPRS and SMS settings are described in **GPRS** section. FM4100 communicates with server using special data protocol. Data protocol is described in "FM Protocols" document.

FM4100 can be managed by SMS commands. SMS Command list is described in SMS Cpmmand List section. Module configuration can be performed over TCP or via SMS. Configuration parameters and modes are described in "FM Protocols" document.

5.2 Sleep mode

FM4 can enter sleep mode (standby mode) under two conditions:

- FM4 does not detect movement. Accelerometer has to be configured properly, so it provides correct indication about movement. Usually most sensitive settings are used. See accelerometer settings in chapter 6 for more details.
- FM4 does not send or receive any data for 5 minutes. This means that if coordinate recording interval is more frequent than 5 minutes, FM4 will never go to sleep mode.

FM4 can exit sleep mode under three conditions:

- FM4 detects movement. Again – accelerometer has to be configured properly.
- Event or request forces FM4 to make a record

While in sleep mode, FM4 sets GPS receiver to sleep mode, therefore it does not record or send any data. The power usage also decreases allowing to save vehicle battery.

5.3 Accelerometer

FM4 has a built in 3 axis accelerometer which allows FM4 to indicate if vehicle is moving or not as well as measure acceleration. Accelerometer sensitivity can be configured – it has 5 ongoing parameters: Delta X, Y and Z define angles in 3D space and start/stop timeouts define time intervals in milliseconds. To indicate that vehicle is moving, FM4 constantly checks for angle change greater than the one defined in Delta X, Y or Z fields. If angle keeps changing for defined time interval in 'Start Move Timeout' field, then vehicle is considered as moving. Same settings for idle indication apply – if angle change is less than the one defined in appropriate field for time interval defined in 'Stop Move Timeout' field, then vehicle is considered as idle (not moving). For best effect it is recommended to set accelerometer to highest sensitivity – see picture below for sample values.

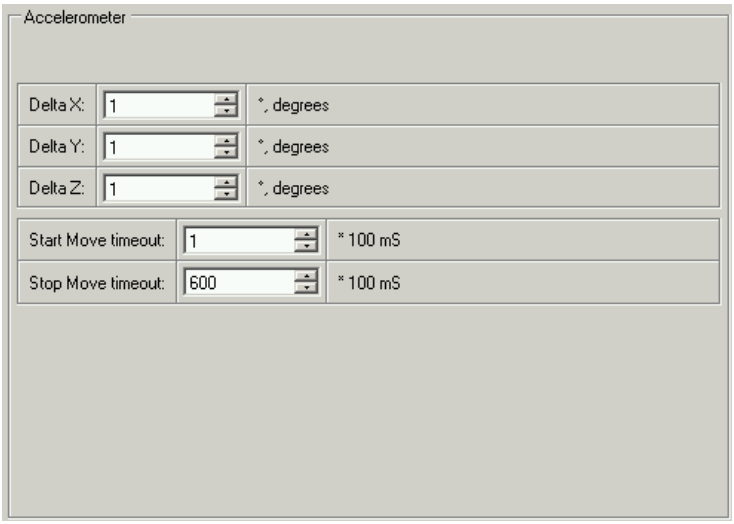

13 Figure Accelerometer settings

5.4 Virtual odometer

Virtual odometer is used to calculate traveled distance in FM4 as a separate I/O element. When FM4 detects movement, it starts counting distance using GPS signal: every second it checks current location and calculates distance between current and previous point. It keeps adding these intervals until it is time to make a record, then FM4 records its location and adds odometer value, which is equal to the sum of all distances, measured every second. When record is made, odometer resets to zero and distance calculation starts all over again. Note, that FM4 does not measure distance between coordinates, that it records using time, distance or angle change intervals. Instead it uses virtual points which are established every second, and calculates distance between them.

5.5 Voice functionality

FM4 has functionality to receive and make voice calls. To enable this functionality telephone handset with electret microphone and RJ-11 connector must be connected to 'Audio' port.

Configuration parameters are described in 'Global parameters'. In 'GSM Settings', main configurator menu, number of rings after which FM4 will automatically answer incoming call must be set (0 – auto-answer is disabled). 'Auto Answer' must be configured in all operating profiles.

When FM4 receives incoming call it triggers DOUT4 – be sure no unassociated external equipment is connected to this output.

5.6 Profiles

FM4 has 4 profiles saved in Flash memory of the module. Every profile has a list of parameters, which enables FM4 to operate in different modes while using different profiles. The easiest way to understand what is profile is to compare it to a list of instructions that are written for different cases. You are allowed to setup up to 4 different module behaviors. Global parameters contain settings that are common for al 4 profiles. This means that if you set FM4 to call to predefined number, you will be able to call it while using any profile. Basic scheme of Global parameters and profiles is shown below.

According to the scheme every profile has a list of parameters. Global parameters are common for all profiles.

Switching between profiles (changing behavior) can be performed by Profile switch depending on GSM operator code (mostly used for roaming applications), or by Profile switch depending on I/O event (on I/O value changing).

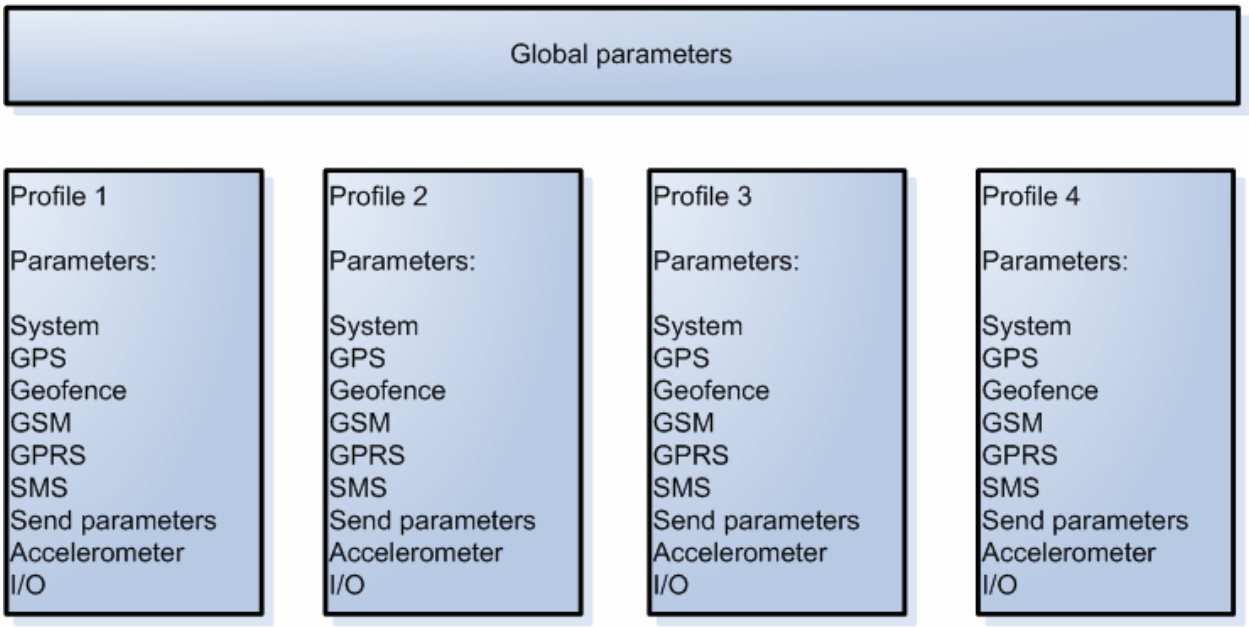

14 Figure FM4100 profile structure

Profile 3 is default profile for FM4. It is always loaded on first startup and further profile switching is proceeded after operator scan or I/O element change.

Profile 4 is 'panic' profile for FM4. FM4 can only switch to this profile if 'panic' priority event is detected (see event configuration). There is only one way to exit profile 4 – send a special SMS command (see SMS Command List). All records sent while using profile 4 are marked as high priority records.

5.7 Profile switch depending on GSM operator code

GSM Operator code profile switching is mostly used in roaming applications, when the purpose is to have information from module both from Home and Roaming operator network for reasonable price. This method allows you to define different module behavior in Home network, Roaming network and unknown operator areas. See figure below for details.

Profile 1 is configured for home network. Data acquisition and send intervals are quite frequent here. To make profile use effective, it is wise to set more optimized parameters in roaming profile (Profile 2) – this usually includes larger coordinate recording intervals, packets with greater number of coordinates sending, and in some cases GPRS context available only for certain time interval. Profile 3 should not allow GPRS transfer at all and should only send few position SMS with coordinates just to have basic idea where vehicle is located. Profile 4 is not used.

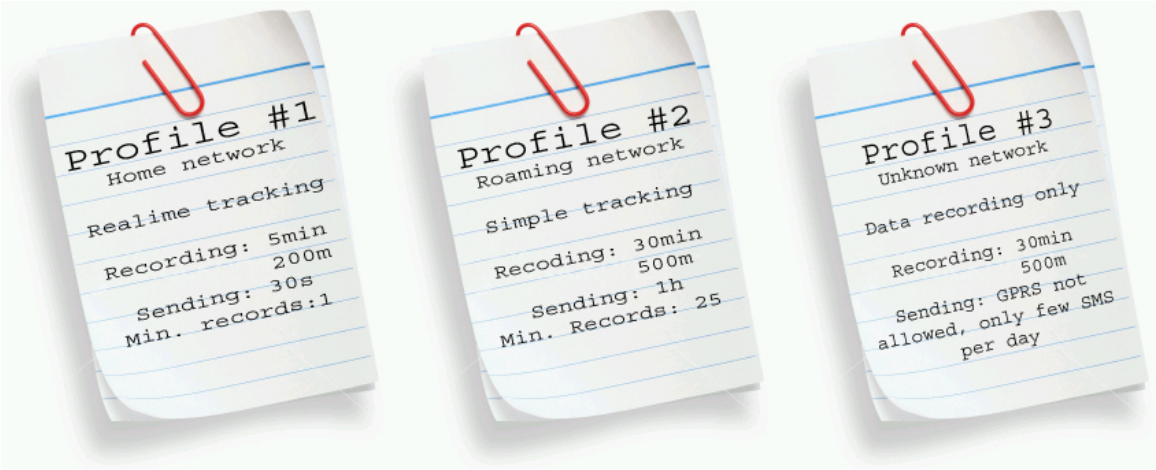

15 Figure Roaming application profile configuration example

Find profile switching diagram below: In the example FM4 connects to operator with code 24702. It checks profile 1 operator list, but there is only one operator code entered which does not mach. The it checks profile 2 list. This code is entered there, so FM4 switches to profile 2. If profile 2 would not contain this operator code, then FM4 would switch to profile 3, which is default profile for FM4. Note, that FM4 does not read operator codes entered in profile 3, instead it uses this profile if currently used operator code is not listed in profile 1 or 2. Profile 4 is not used in this scenario and can only be used when FM4 encounters a 'panic' priority event (see event configuration for more details).

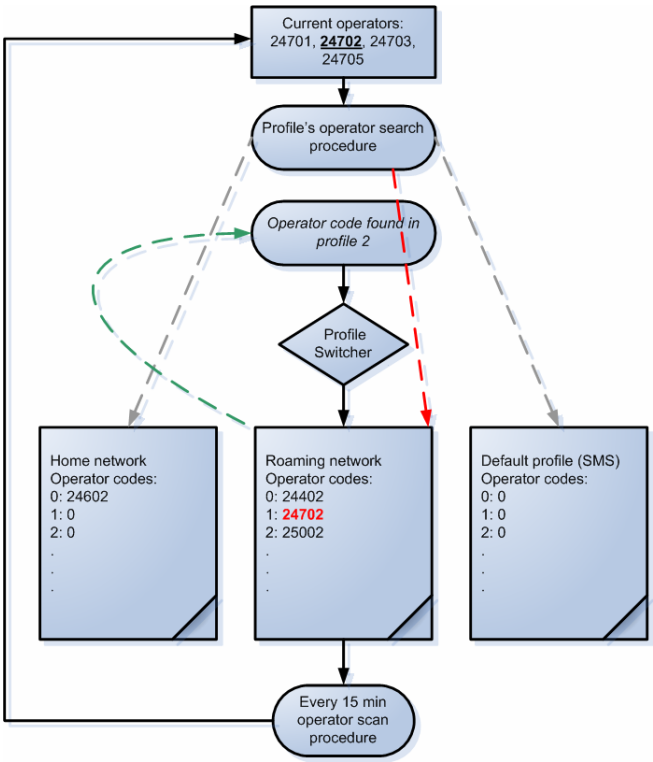

16 Figure GSM operator code based profile switching algorithm

5.8 Profile switch depending on I/O event

Another profile switch method is based on I/O event. See I/O settings for information how to configure FM4 to switch profiles depending on I/O elements.

6 CONFIGURATION

6.1 Configurator

New FM4100 module has default factory settings. Settings should be changed according to your application and your GSM operator information.

FM4100 Configuration is performed via FM4100 Configurator program. Latest FM4100 Configurator versions can be downloaded from http://avl1.teltonika.lt/downloads/FM4. FM4100 configurator operates on Microsoft Windows OS and uses MS .Net Framework 2.0 or higher. Please ensure that MS .Net Framework 2.0 or higher is installed on your PC before starting configurator. Latest MS .Net Framework version can be downloaded from official Microsoft web page.

Module configuration is performed over cable labeled PORT1/2. Configuration process starts from loading FM4100 Configurator program and selecting COM port. Select COM port and click 'Connect' button.

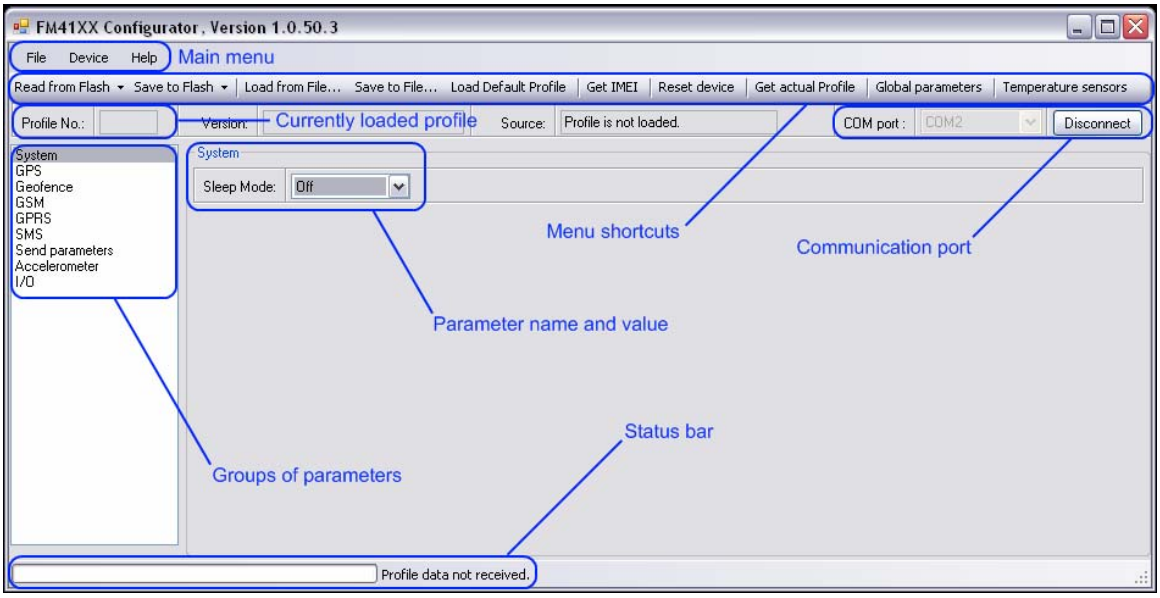

17 Figure Configurator window

FM4100 has 4 user editable profiles stored in Flash no. 1-4 memories and one extra profile stored in Flash no. 0 which can not be edited by user. Profile from Flash no. 0 is used by system and can not be selected as active, while profiles from Flash no. 1-4 are fully editable and can be selected as active.

Figure below shows reading profiles from Flash memory procedure.

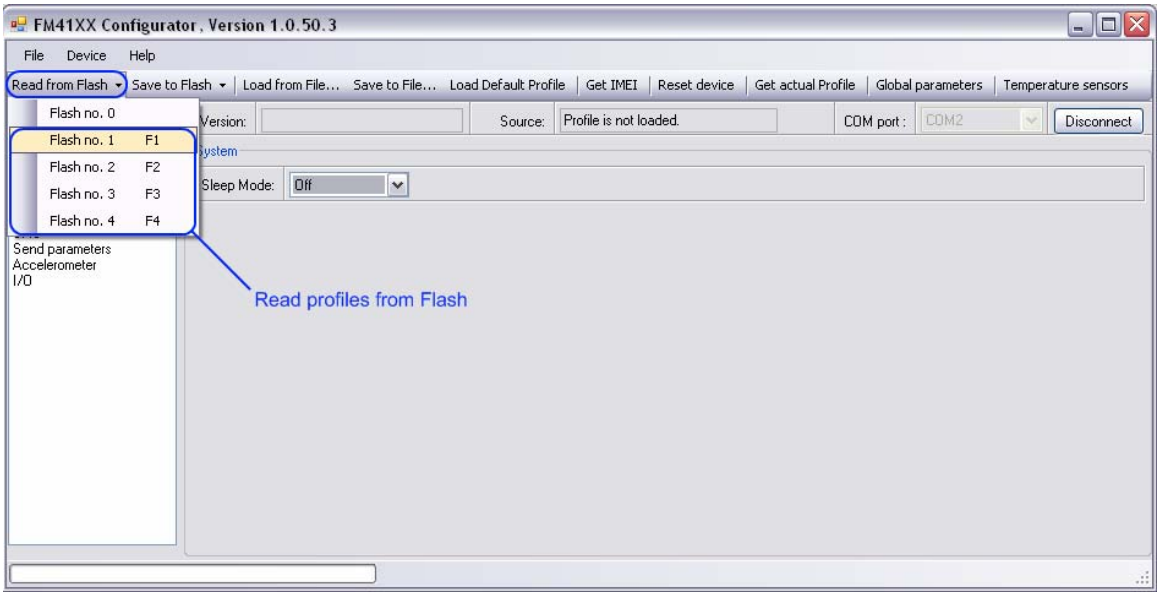

18 Figure Reading profiles from flash

After changing profile parameters, changes can be saved to FM4100 Flash. Figure below shows saving to flash memory procedure.

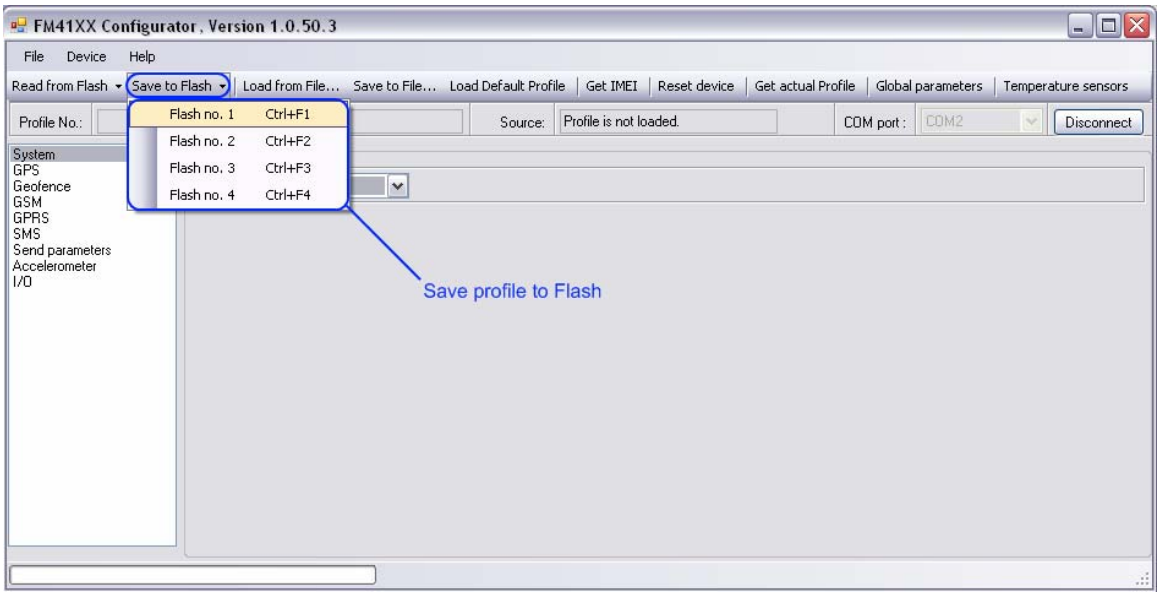

19 Figure Saving profiles to flash

Shortcuts help access menu functions more quickly.

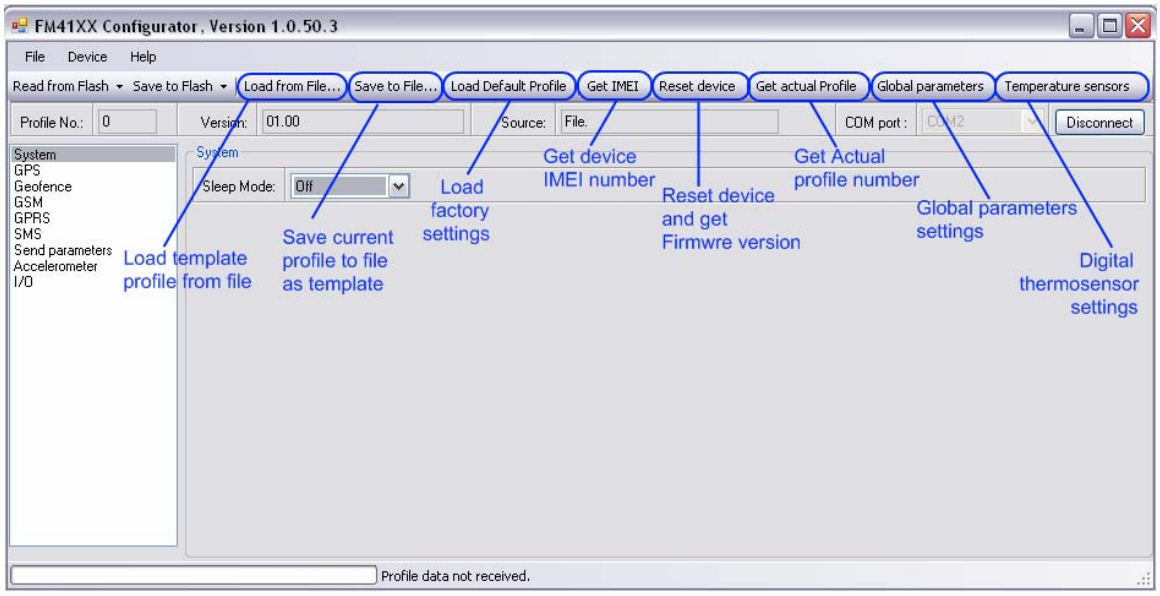

20 Figure Configurator shortcuts

'Load from file' – allows user to load configuration saved in .XML extension file.

'Save to file' – allows user to save currently entered settings to a file.

'Load default profile' – loads default FM4 settings that later can be modified. This procedure must be performed before entering new parameters.

'Get IMEI' – reads FM4 IMEI number. This number is unique for every FM4 and usually servers recognize different devices by this number.

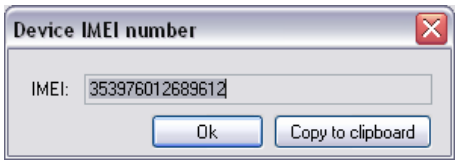

'Reset device' – reboots FM4 and displays processor firmware version.

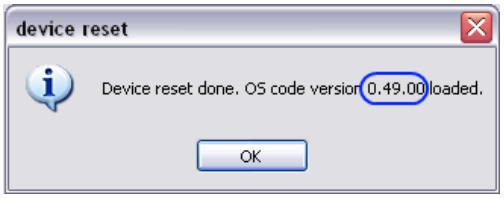

'Get actual profile' – allows to read currently used profile number.

6.2 Global parameter settings

Global parameters are parameters of the module that do not depend on selected profile. They are common for all profiles.

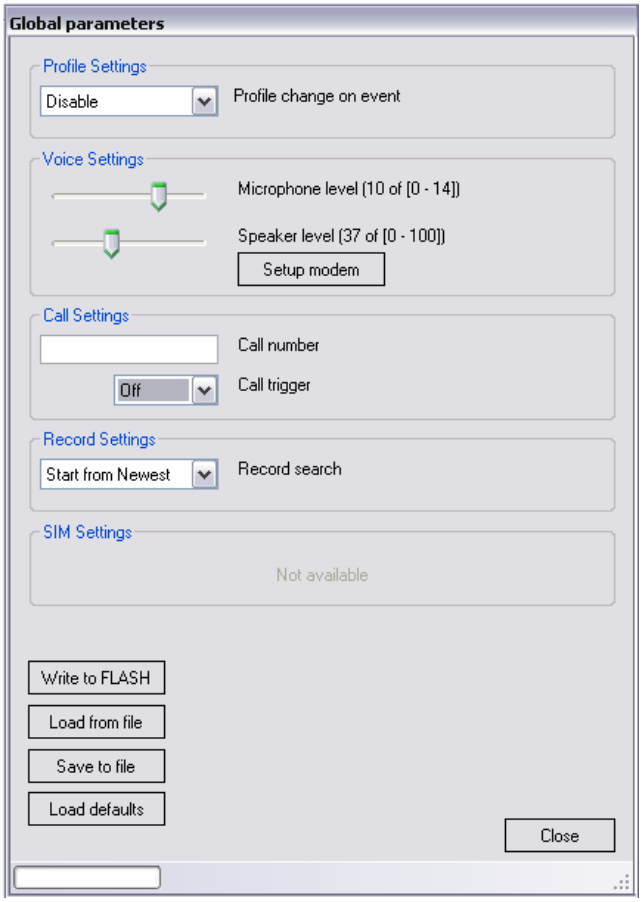

21 Figure Global parameters window

'Profile settings' – allow you to select profile switching method. When 'Profile change on event' is disabled – FM4100 switches profiles depending on GSM operator code method. Otherwise it switches profiles depending on I/O events (see chapter 5 for more details about profile switching).

'Voice settings' – allow to setup microphone sensitivity level and speaker loudness level.

'Call Settings' – allow to enter one number to which FM4 will be able to call to. Call trigger defines input, which will be used to receive or make a call. Usually to that input a button is connected.

'Record Settings' – are used to switch between two data sending modes: starting from newest records or starting from oldest record.

6.3 Temperature sensors

When two or three temperature sensors are connected to FM4 it is necessary to define sensor ID to certain property separately. This way FM4 will know which temperature sensor is which property. Definition is preceded with configurator: choose 'Temperature Sensors'.

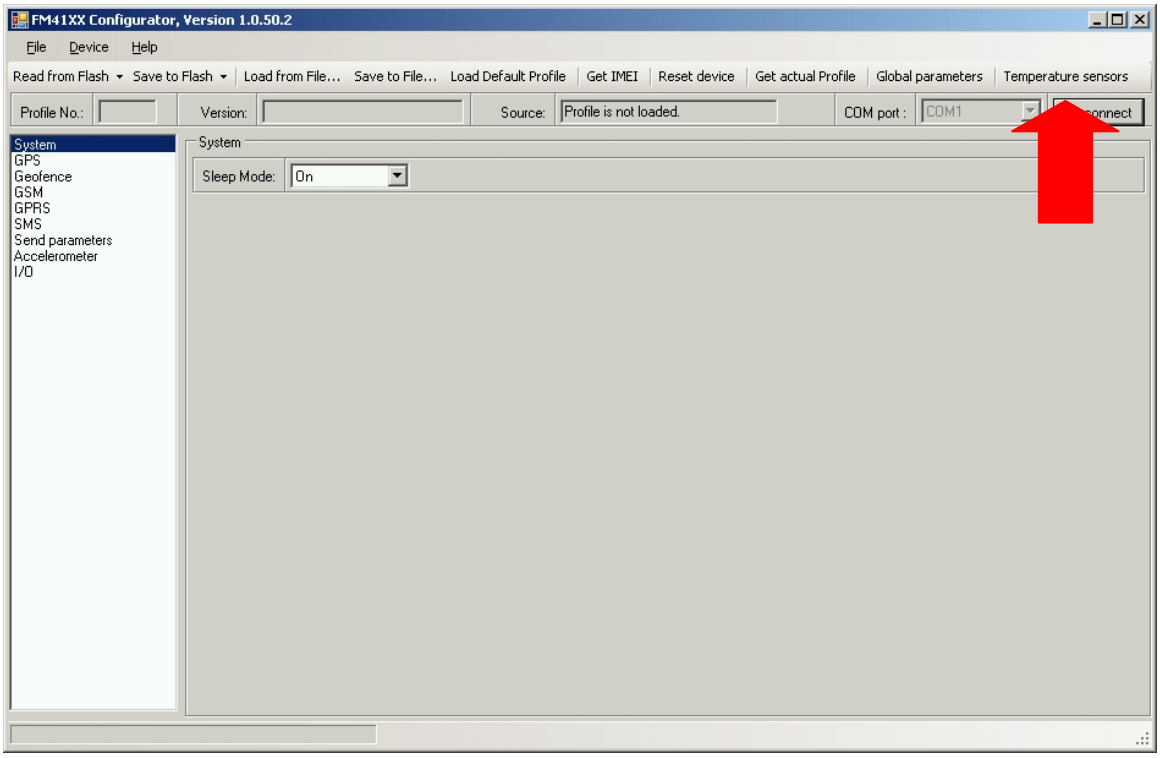

Make sure, that sensors are connected to FM4 and click 'Read Sensors' in the new window. In the fields Dallas0, Dallas1 and/or Dallas2 sensor unique identifiers appear. Click 'Write to Flash' – now FM4 memorized sensor IDs and attached them to defined properties. If different sensors will be used, FM4 will not recognize them.

When FM4 is installed with two or more temperature sensors, it should always be preconfigured and same temperature sensor used as the ones that configuration was made with.

If only one temperature sensor is connected, no definition is necessary, FM4 automatically reads sensor as Dallas0 property.

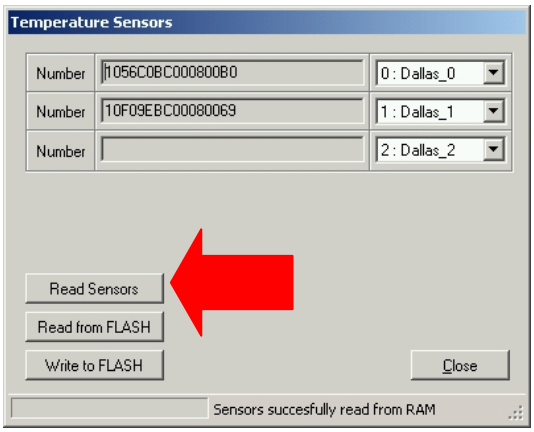

6.4 System settings

System settings menu has only one parameter – Sleep mode. It can be enabled or disabled by turning it on or off. See sleep mode description on chapter 5.2 for more details.

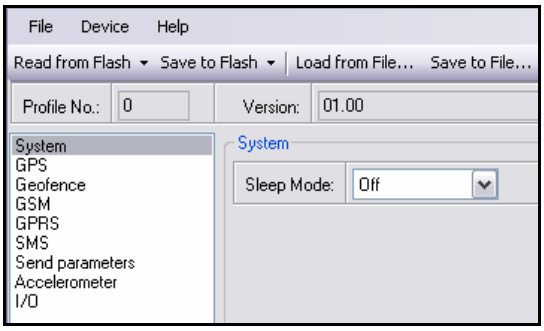

22 Figure System settings

6.5 GPS settings

GPS settings define GPS data acquiring methods and frequencies.

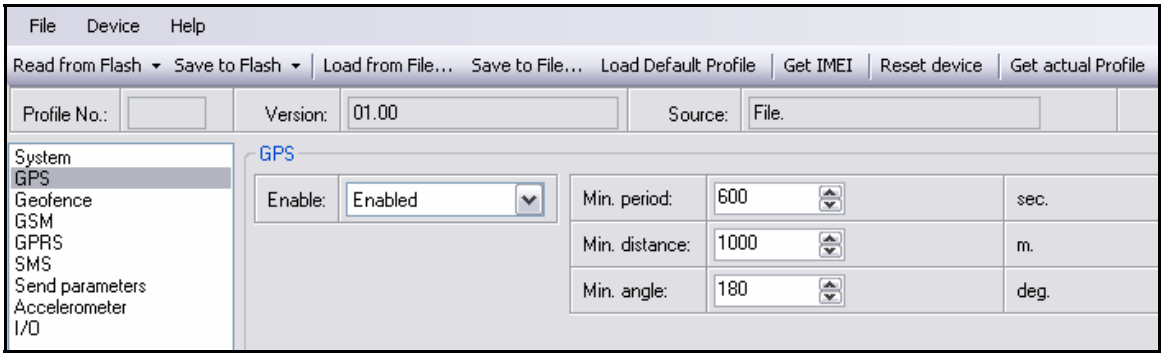

23 Figure GPS Settings

Device is checking if the time between last saved record and current time is equal or higher than Time based acquire interval. If so, FM saves record to memory. If not, FM checks if the distance from last record to current record is equal or higher than Distance based acquire interval. If so, saves the record to memory. If not and speed is higher than 10km/h, then FM is checking if angle difference between last record and current record is equal or higher than Angle based acquire value. If so, saves the record to memory. This check is being performed every second.

FM4100 is able to collect records using three methods at the same time: time, distance and angle based data acquisition:

- Time based data acquiring (Min. period) – records are being acquired every time when defined interval of time passes. Entering zero means that data will be recorded as fast as possible (every second).

- Distance based data acquiring (Min. distance) – records are being acquired when the distance between previous coordinate and current position is greater than defined parameter value. Entering zero means that data will be recorded every 0 meters (as fast as possible – every 1 second).

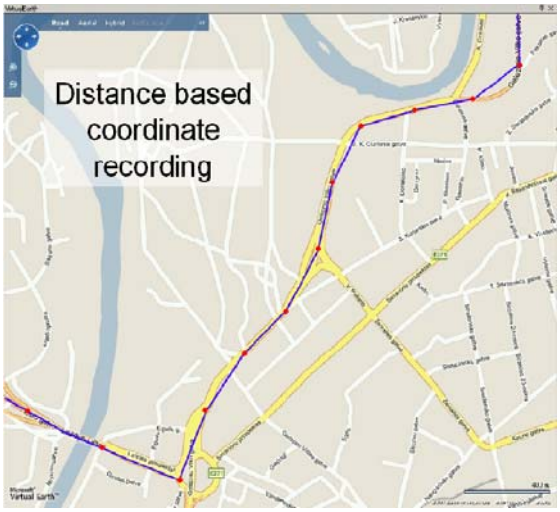

- Angle based data acquiring (Min. angle) – records are being acquired when angle difference between last recorded coordinate and current position is greater than defined value. Entering zero disables data acquisition depending on angle.

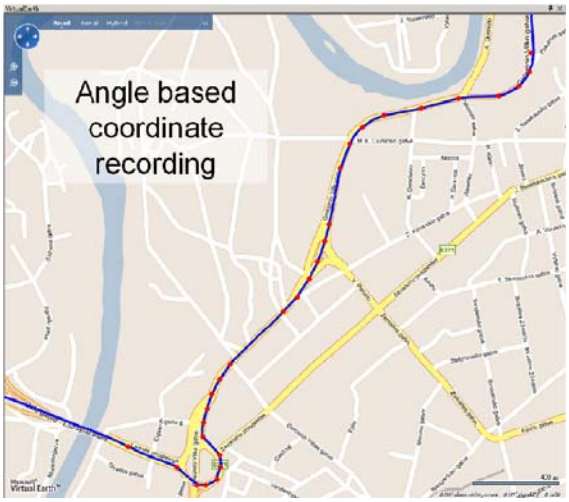

6.6 Geofence settings

FM4100 has 20 configurable Geofence zones and it can generate event when defined Geofence zone border is crossed.

- Frame border – frame border is an additional border around Geofence zone. It is additional area around defined zone used to prevent false event recording when object stops on the border of the area and because of GPS errors some records are made inside area and some – outside. Event is generated only when both borders are crossed. See figure for details: track 1 is considered to enter the area while track 2 does not.

24 Figure Geofence border

- Shape – can be rectangular or circle
- Priority – priority of Geofence event – low, high or panic. These levels define priority of event information sending to server. See I/O element description for more details about priorities.
- Enter event – enable or disable zone entering event
- Exit event – enable or disable zone leaving event
- X1 – geofence zone left bottom corner X coordinate
- Y1 – geofence zone left bottom corner Y coordinate
- X2 or R – geofence zone upper right corner X coordinate (radius of circle when Circular zone used)
- Y2 – geofence zone upper right corner Y coordinate

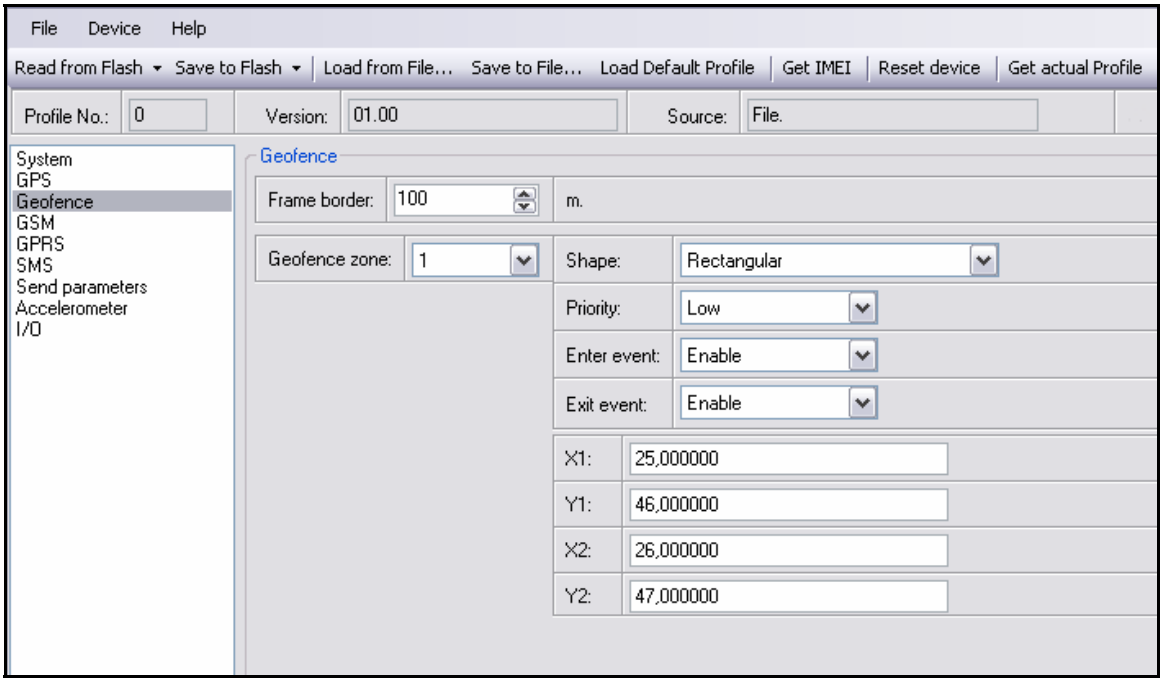

25 Figure Geofence settings

6.7 GSM settings

GSM settings allows to set up basic GSM parameters:

- Auto answer – number of rings after which module automatically answers incoming voice call
- Protocol – data transport protocol: TCP or UDP
- Min. saved records – minimum records (positions) to send in AVL data packet. If FM4 does not have enough records (positions) to send to server, it will check again after time interval defined in 'Sending Period' (see below).

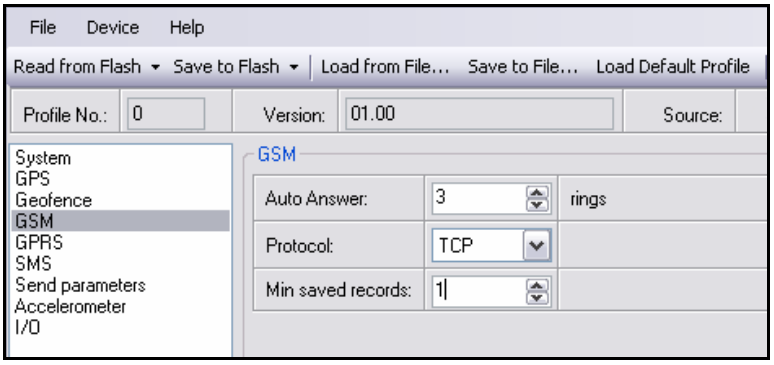

26 Figure GSM settings

6.8 GPRS settings

- Enable – enables or disables GPRS usage in current profile.
- APN – GPRS Access Point Name (provided by your GSM operator)
- APN username – GPRS user name (provided by your GSM operator – optional parameter)
- APN Password – GPRS user password (provided by your GSM operator – optional parameter)
- IP address – AVL Server IP Address
- Port – AVL Server port number

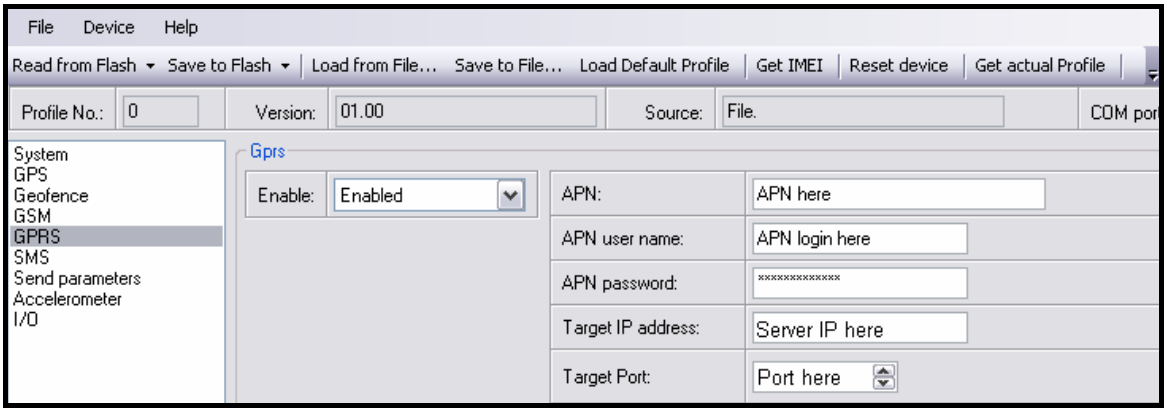

27 Figure GPRS Settings

6.9 SMS settings

- SMS data send – enable or disable periodic data and event SMS use. Note, that this does not affect replies to messages – they are always sent to sender number.
- SMS send timeout – SMS send timeout (recommended 60 sec.)

- SMS Login – module login for SMS
- SMS Password – module password for SMS
- Server phone number – authorized server phone number for SMS requests, configuration, 24-coordinates and event binary SMS
- Authorized phone numbers – other authorized numbers that are allowed to control FM4 remotely

Module login and password, server and authorised number list is used to protect FM4 module from unauthorised access. Module accepts messages only from a list of authorised numbers and with proper module login and password. Numbers must be without "+" or "00" prefix. If no authorised numbers are entered, module accepts messages from all numbers. Server phone number automatically counts as authorised number.

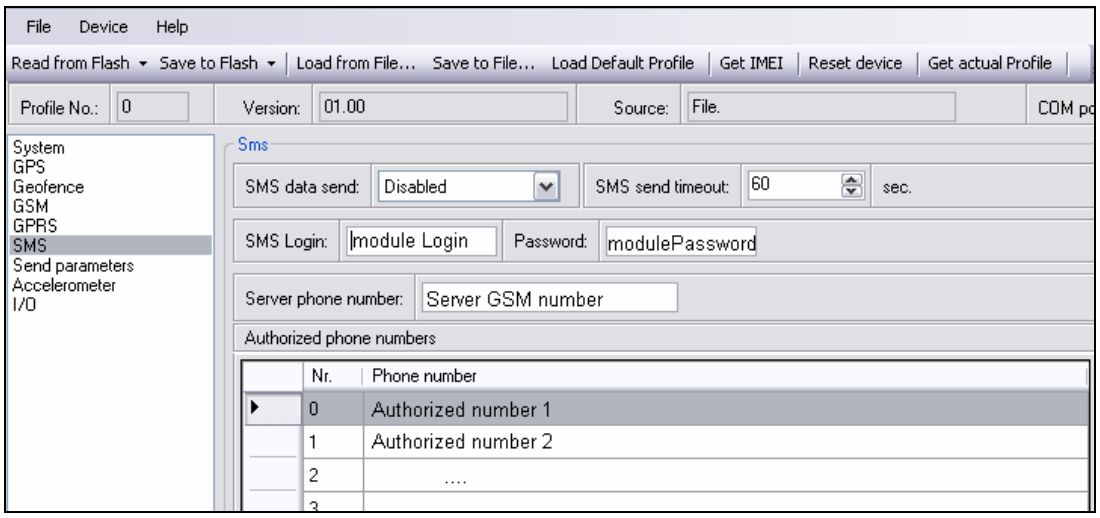

28 Figure SMS Settings

6.10 Send Parameter settings

Send parameters window allow to set GPRS and SMS data send periods, sending schedules, set allowed operator list.

- Send period – GPRS data sending to server period. Module makes attempts to send collected data to server every defined period. If it does not have enough records (depend on parameter Min. Saved Records described above), it tries again after defined time interval
- Time step – FM4 is improved with 24-coordinates-in-one-SMS sending mechanism. 24-coordinates-in-one-SMS mechanism is used in areas where no GPRS coverage is available. Module collects data and sends to server binary SMS containing information about last 24 collected points with interval between them defined in time step field. SMS sending schedule is set in SMS Week Time tab. 24-Coordinates SMS decoding is described in "FM Protocols" document.
- GPRS Context Week Time tab – most GSM billing systems charge number of bytes (kilobytes) transmitted per session. During the session FM4 makes connection and transmits data to a server. FM4 tries to handle session as much as possible. Session can last hours, days, weeks or session can be closed after every connection in certain GSM networks – this depends on GSM network provider. GPRS Context Week Time defines session re-establish schedule if session was closed by network. New

GPRS context is opened if time is 10 minutes till time checked in table. Therefore if all boxes are checked, FM4 is able to open new connection anytime. At scheduled time match FM4 checks for GPRS session activity. If GPRS session is alive, FM4 sends data to server according to Send period parameter. If it is not, FM4 checks if it is able to re-establish the session.

- SMS Week Time tab – week time allows to set SMS data sending schedule. SMS mode mostly used in areas where GPRS is not available.

Note FM4100 operates GMT time without daylight saving.

- Operators list – FM4 one of profile switching methods is GSM operator code profile switching according to currently selected operator. If currently selected GSM operator code is in profile list, FM4 will load the profile containing this GSM operator code. See profile description for more details. If no operator codes are entered in any profile, FM4 will operate in Profile Nr3. Operator codes are usually 5 digit numbers that should be entered without no additional symbols, such as "-" or other – first three numbers define country code, last two numbers – operator number. It is possible for one operator to have more than one operator code. In the picture below displayed is only a sample operator code.

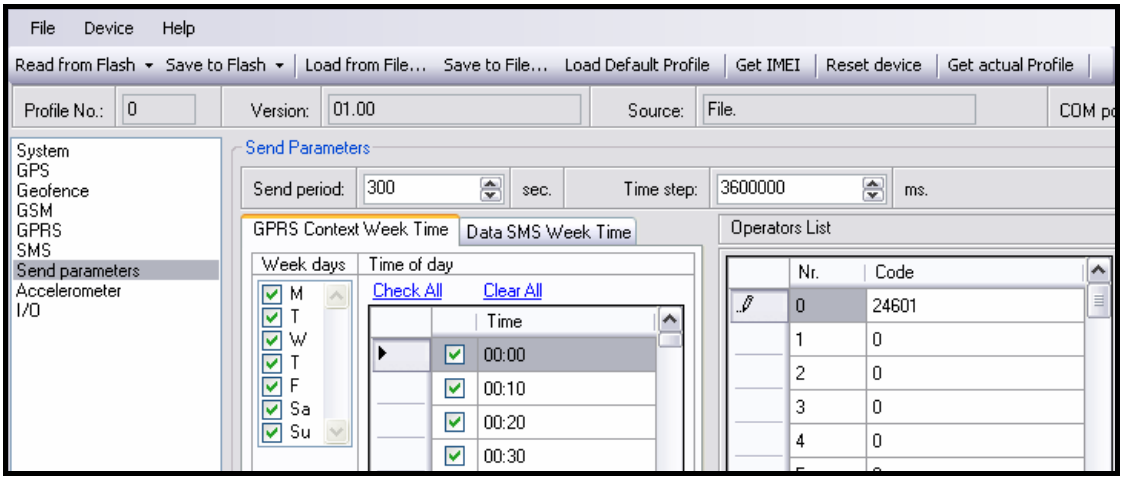

29 Figure data send parameters settings

6.11 Accelerometer

Detailed accelerometer functionality along with setting fields are described in Operational Basics, Accelerometer chapter.

6.12 I/O settings

When all I/O elements are disabled, AVL packet comes with GPS part only. After enabling I/O element(s) AVL packet is contains both GPS and I/O parts.

List of available I/O elements includes I/O id, names, units, minimum and maximum values.

Property ID in AVL packet	Property Name	Bytes	Description
1	Digital Input Status 1	1	Logic: 0 / 1
2	Digital Input Status 2	1	Logic: 0 / 1
3	Digital Input Status 3	1	Logic: 0 / 1
4	Digital Input 4	1	Logic: 0 / 1
9	Analog Input 1	2	Voltage: mV
10	Analog Input 2	2	Voltage: mV
11	Analog Input 3	2	Voltage: mV
19	Analog Input 4	2	Voltage: mV
21	GSM Signal Strength	1	Signal strength level 0 (lowest) – 5 (highest)
22	Current Profile	1	Profile Number
23	Accelerometer data	4	g*10, m/s²
24	GPS speed	2	km/h
66	Power Supply Voltage	2	Voltage: mV
67	Battery Voltage	2	Voltage: mV
68	Battery Current	2	Current: mA
69	GPS Power	2	States: 0 – short circ., 1 – connected.
70	PCB Temperature	4	10 * Degrees (°C)
72	Temperature Sensor1	4	10 * Degrees (°C)
73	Temperature Sensor2	4	10 * Degrees (°C)
74	Temperature Sensor3	4	10 * Degrees (°C)
76	Fuel Counter	4	Difference of generated impulses on two signal lines
78	iButton Input	8	Specific Data
145	CAN 0	varying*	ID Specific Data
146	CAN 1	varying*	ID Specific Data
147	CAN 2	varying*	ID Specific Data
148	CAN 3	varying*	ID Specific Data
149	CAN 4	varying*	ID Specific Data
150	CAN 5	varying*	ID Specific Data
151	CAN 6	varying*	ID Specific Data
152	CAN 7	varying*	ID Specific Data
153	CAN 8	varying*	ID Specific Data
154	CAN 9	varying*	ID Specific Data
155	Geozone 01	1	Event: 0 – target left zone, 1 – target entered zone
156	Geozone 02	1	Event: 0 – target left zone, 1 – target entered zone
157	Geozone 03	1	Event: 0 – target left zone, 1 – target entered zone
158	Geozone 04	1	Event: 0 – target left zone, 1 – target entered zone
159	Geozone 05	1	Event: 0 – target left zone, 1 – target entered zone
160	Geozone 06	1	Event: 0 – target left zone, 1 – target entered zone
161	Geozone 07	1	Event: 0 – target left zone, 1 – target entered zone
162	Geozone 08	1	Event: 0 – target left zone, 1 – target entered zone
163	Geozone 09	1	Event: 0 – target left zone, 1 – target entered zone
164	Geozone 10	1	Event: 0 – target left zone, 1 – target entered zone
165	Geozone 11	1	Event: 0 – target left zone, 1 – target entered zone
166	Geozone 12	1	Event: 0 – target left zone, 1 – target entered zone
167	Geozone 13	1	Event: 0 – target left zone, 1 – target entered zone
168	Geozone 14	1	Event: 0 – target left zone, 1 – target entered zone
169	Geozone 15	1	Event: 0 – target left zone, 1 – target entered zone
170	Geozone 16	1	Event: 0 – target left zone, 1 – target entered zone
171	Geozone 17	1	Event: 0 – target left zone, 1 – target entered zone
172	Geozone 18	1	Event: 0 – target left zone, 1 – target entered zone
173	Geozone 19	1	Event: 0 – target left zone, 1 – target entered zone
174	Geozone 20	1	Event: 0 – target left zone, 1 – target entered zone
199	Virtual Odometer	4	Available when accelerometer is enabled. Value returned in meters.
240	Movement	1	Available when accelerometer is enabled. 0 – not moving., 1 – moving.

* - CAN property length varies depending on filter settings. Data can be sent as 1, 2, 4 or 8 byte property. I.E. if FM4 is set to send only 3 bytes from CAN message data field, it will be sent as 4 byte property to the server.

There are two types of operations with I/O elements:

- Monitoring of I/O elements status
- I/O elements event capturing

Monitoring method is used in cases when it there is need in monitoring status of I/O element at regular records saving time.

Event capturing is used to store additional AVL packet when state of I/O element is changing. For example Ignition on, Alarm button, over speed, External power supply dropping, etc.

It is allowed to define criteria of event in configurator:

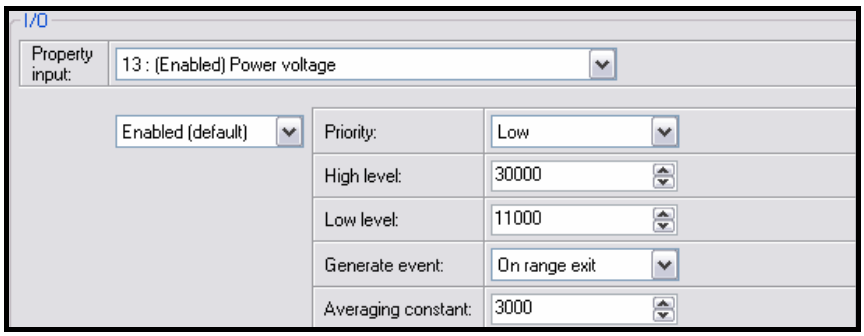

- Enabled or disabled field – allows enabling I/O element so it is added to the data packet and is sent to the server. By default, all I/O elements are disabled and FM4 records only GPS part. It is also possible to set CAN message instead of any I/O element – this way CAN element will be sent to the server instead of chosen element. See CAN description below for more details.
- Priority – AVL packet priority. There are Low, High, Panic, SW21, SW22, SW23, and SW24 priorities. Regular packets are sent as Low priority records. When low priority event is triggered, FM4 makes additional record with indication that the reason for that was IO element change. When High priority is selected, module makes additional record with high priority flag and sends event packet immediately to the server. First it tries it send using GPRS, if GPRS fails, it sends AVL packet using SMS mode if SMS is enabled in **SMS** settings. Panic priority event forces module to send AVL packet to server and switch operating profile to Profile 4. (see profiles description for more details). SW2X priorities switch profiles on event.
- High and Low levels – define I/O value range. If I/O value enters or exits this range, FM4 generates event. "Generate event" parameter defines when to generate event – when value enters defined range, exits it or both.
- Averaging constant – it is an I/O event delay parameter. In some applications there is no need to generate events on every I/O range enter/exit immediately. Sometimes it is necessary to wait some time interval before event generating to be ensure that current event is not short time event. Averaging constant allows to set I/O event delay (averaging). If I/O value is entering or leaving predefined range, it must have

same value for Averaging constant time. 1 Averaging constant value equals 20 milliseconds.

6.12.1 Monitoring

I/O monitoring starts after enabling I/O element and setting up I/O parameters as it is shown below:

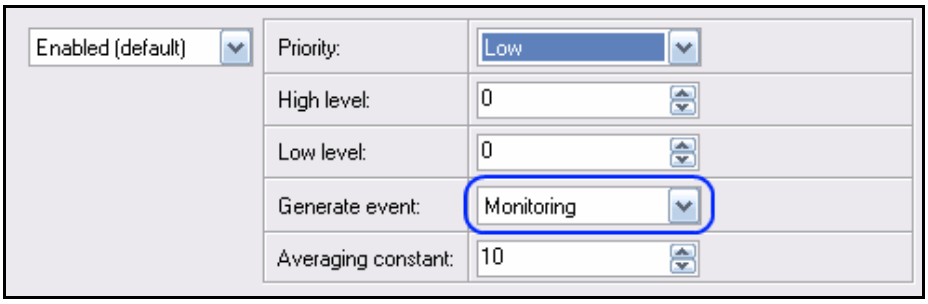

6.12.2 Event Generating

Events happen when the value of enabled I/O intersects thresholds (enter, exit or on both) predefined by High and Low level thresholds. Table below defines all available values of I/O settings.

Priority	low, high, panic, SW21, SW22, SW23, SW24
High level	maximum threshold
Low level	minimum threshold
Generate event	on interval enter, on interval exit, on both
Average constant	$1 – 2^{32}$ (4 Bytes)

SW21, SW22, SW23, SW24 stand for "Switch to profile No. X" – after event happens, FM4 switches to defined profile. Using profile switching you can create smart applications. **SW2X actions can be performed only if "Profile change on event" is enabled in Global parameters.**

Pictures below illustrate profile switching depending on digital events:

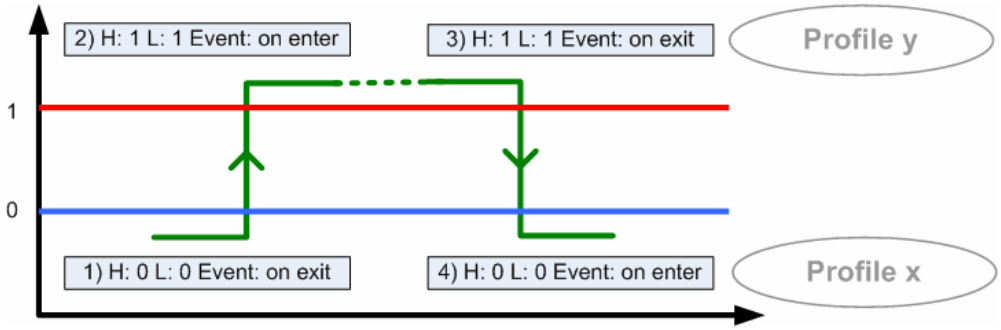

30 Figure Digital input event criteria

According to Figure, event on digital inputs could be described in different ways by using 1 and 3, 1 and 4, 2 and 3, 2 and 4 settings.

Profile1 switches to Profile2 when DIN1 value changes from 0 to 1.

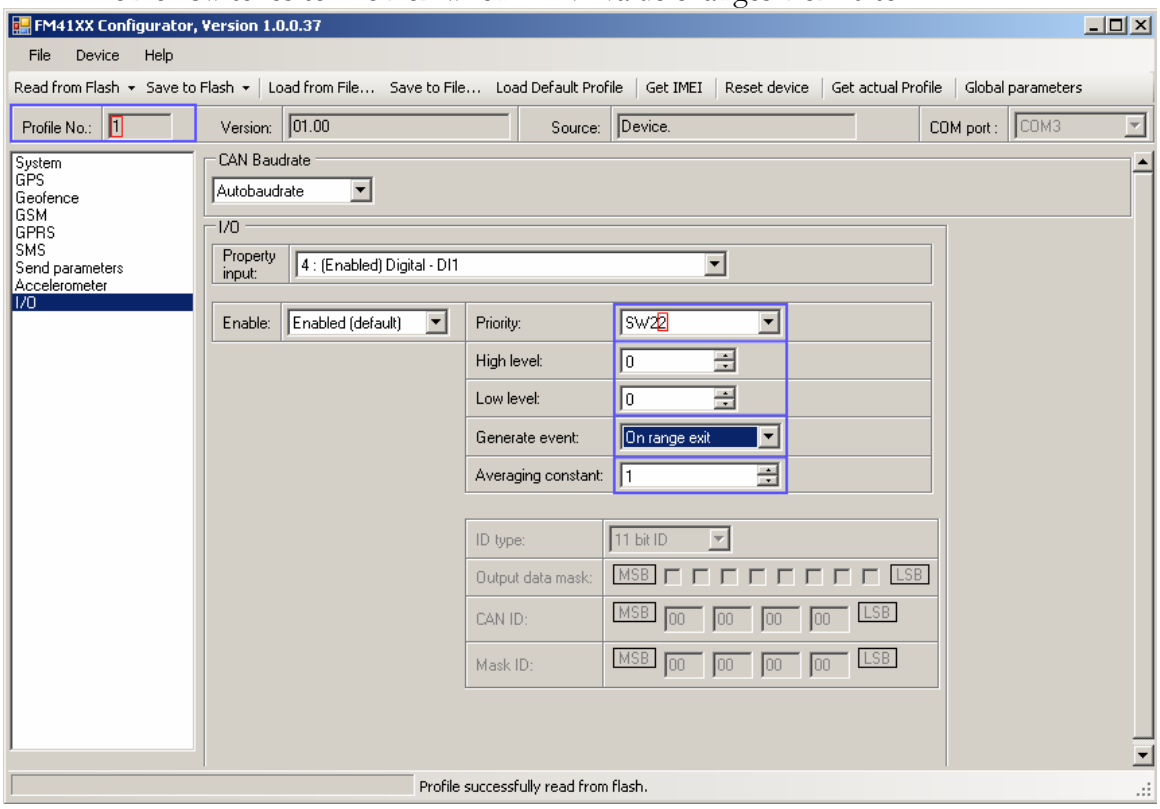

31 Figure Switch to profile on event

Profile2 changes to Profile1 when DIN1 state changes from 1 to 0.

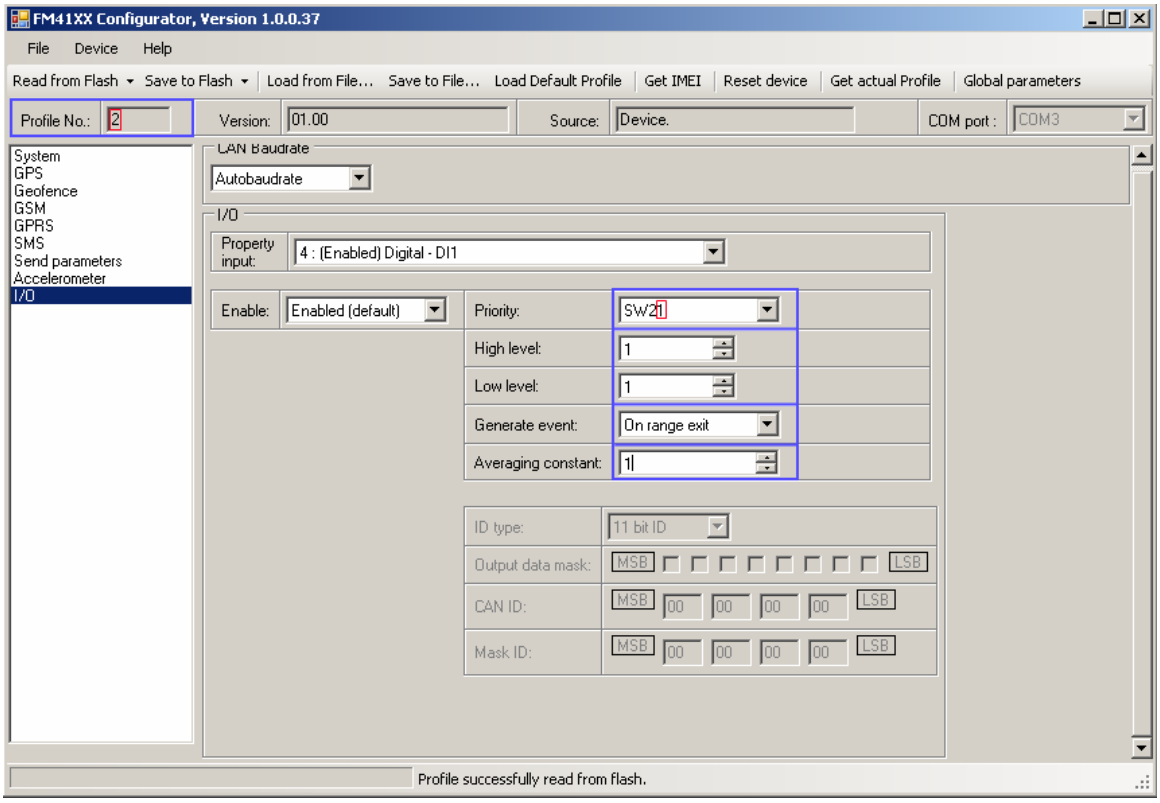

32 Figure Switch to profile on event

In same way you can configure profile switching depending on any I/O event.

6.13 CAN settings

Controller Area Network (CAN or CAN-bus) is a computer network protocol and bus standard designed to allow microcontrollers and devices to communicate with each other and without a host computer. It was designed specifically for automotive applications but is now also used in other areas.

SAE J1939 is the vehicle bus standard used for communication and diagnostics among vehicle components. Based on same architecture FMS protocol dedicated to telematic systems is available. It has certain standardized parameters available, such as fuel consumption, engine work-hours, etc. Please visit http://www.fms-standard.com/ for more information and message structure.

The FMS-interface is an optional interface of different truck manufacturers. Supported information is dependent upon vehicle equipment. For the full information set, additional Electronic Control Units (ECU) may be required. Please contact the manufacturer or your dealer for more details.

Vehicle brands supported:

- Mercedes Benz
- Volvo
- MAN
- DAF
- Iveco
- Scania
- Renault

Available parameters:

- Total Fuel
- Total Distance
- Status of brake pedal *
- Engine Torque *
- Actual fuel
- Accelerator pedal position *
- Status engine brake
- Speed *
- RPM
- Engine hours
- Vehicle Weight *
- Fuel level
- Tachograph data *

* Availability of parameter depends on vehicle's model and configuration of FMS interface of the truck.

A sample CAN message has the following structure: X18FEE9018FFFFFFFF23840300, where essential parts are 'FEE9' – identifier and 'FFFFFFFF23840300' – data bytes. According to FMS standard description, only four bytes are used as can be seen in data field.

CAN messages are configured like any other I/O parameters. They consist of 8 identifier bytes and 8 data bytes. In the screenshot you will find a sample configuration for fuel consumption parameter:

ID type – is always 29 bits.

Output data mask – defines which data bytes are sent to the server (sometimes not all data bytes are necessary).

CAN ID – this is 8 byte identifier. Messages use only four bytes – first two and last two bytes may differ in different vehicle models. Those unused bytes can have any values.

Mask ID – parameter defines which part of CAN ID field should be considered for filtering. To identify message only 3rd, 4th, 5th and 6th bytes are used, that's why Mask ID is always 00 00 FF FF 00 00.

As an example full solution how to setup Mercedes Benz Actros truck is provided.

This information is provided only as an example and Teltonika takes no responsibility for information accuracy or damage that may be done to the vehicle or FM4100 module while integrating it.

All MB Actros 2 models with Vehicle Identification Number (VIN) starting with WDB93 have a possibility to connect FM4100 module to CAN bus. This can be done by connecting to special PSM module (which may or may not be included in the truck) or ground module of the vehicle. For CAN signal to be available, parameter 520 must be enabled in 'kommunikationsschnittstelle' in the vehicle with Mercedes Stardiagnose.

CAN wires can be found on X5 connector located in the fuse box:

Pin 5: CAN Low signal (yellow wire)

Pin 2: CAN High signal (blue wire)

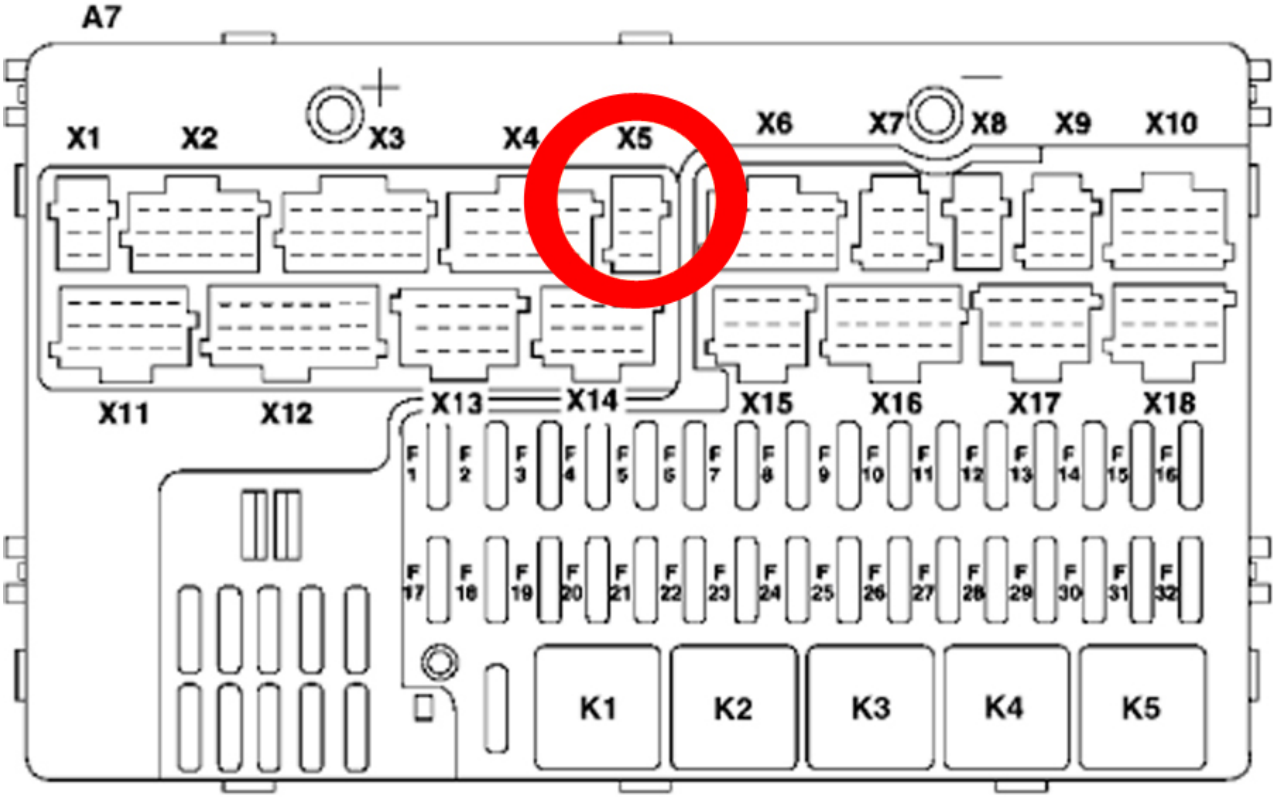

33 Figure X5 plug on MB

In the example FM4100 will filter all CAN messages with identifier XXFEE9XX (fuel consumption), XXFEFCXX (fuel level) and XXFEE5XX (total engine hours). In this case X is any symbol.

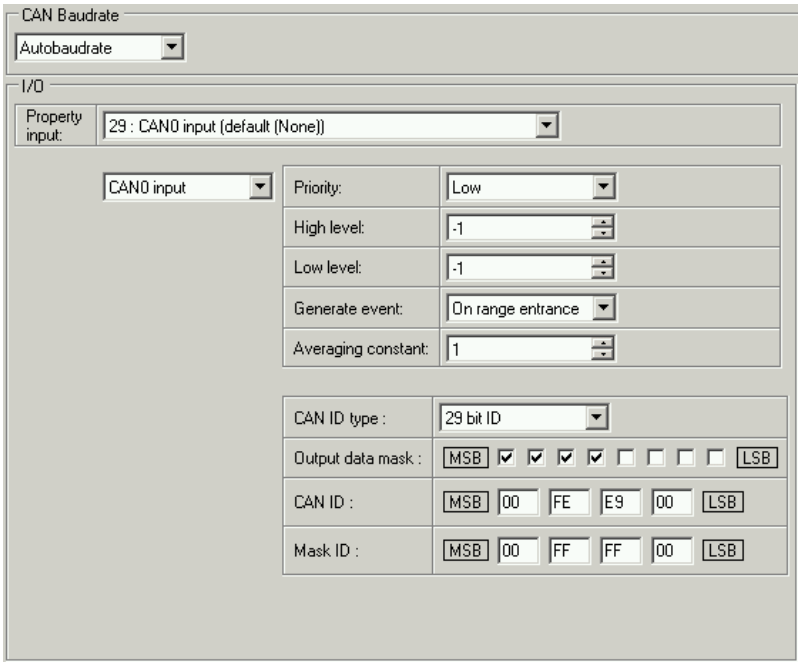

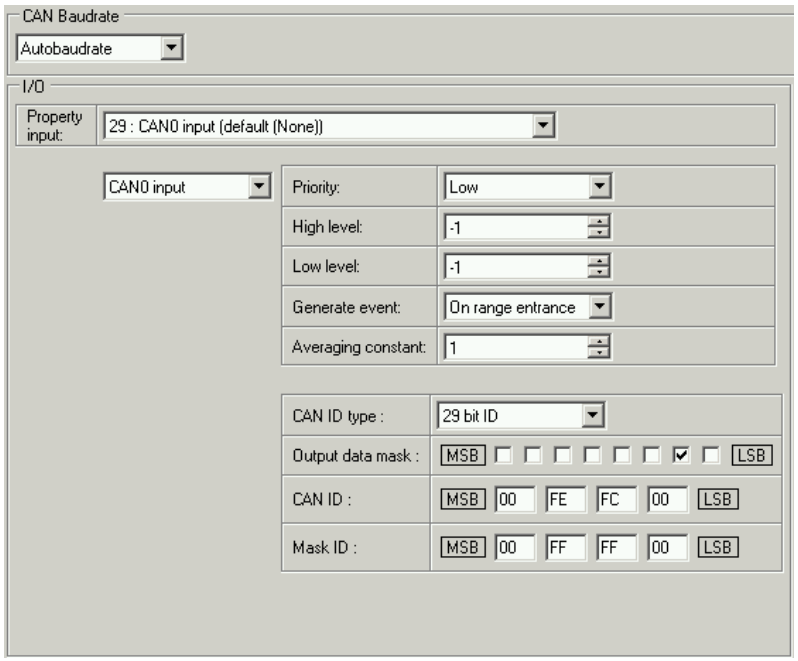

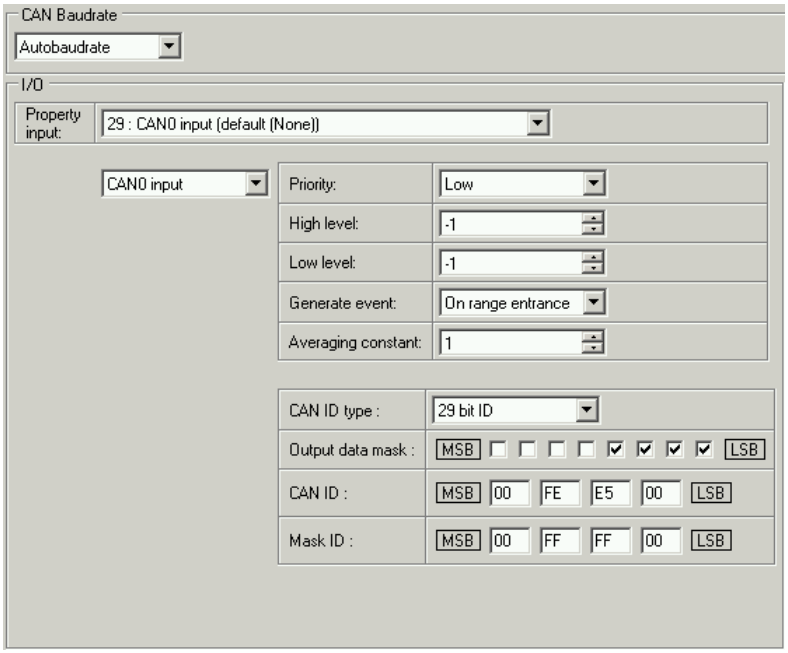

34 Figure CAN parameters configuration examples

Most parameters have certain resolution. FEE9 parameter has 0.5L/bit gain, so value that is sent to server has to be multiplied by 0.5. FEFC has resolution of 0.4%/bit gain, so it has to be multiplied by 0.4. FEE5 has 0.05 h/bit gain – multiplier is 0.05.

Data parsing is preceded by selecting correct message from all available on CAN bus. FMS standard interface description indicates that fuel consumption is parameter with ID FEE9:

00FEE9								PGN Hex
65,257								PGN
1000 ms								Rep. Rate
Data Byte 1	Data Byte 2	Data Byte 3	Data Byte 4	Data Byte 5	Data Byte 6	Data Byte 7	Data Byte 8	Byte No
				8 7 6 5 4 3 2 1	8 7 6 5 4 3 2 1	8 7 6 5 4 3 2 1	8 7 6 5 4 3 2 1	Bit No
Not used for FMS-Standard	Not used for FMS-Standard	Not used for FMS-Standard	Not used for FMS-Standard	Total fuel used 0,5 L / Bit gain 0 L offset 5.2.5.66 SPN 250	Total fuel used 0,5 L / Bit gain 0 L offset 5.2.5.66 SPN 250	Total fuel used 0,5 L / Bit gain 0 L offset 5.2.5.66 SPN 250	Total fuel used 0,5 L / Bit gain 0 L offset 5.2.5.66 SPN 250	Name values values values SAE ref SPN

The example indicates how fuel consumption message is selected and how configuration impacts this selection. CAN ID is message identifier and Mask ID selects which identifier bytes should be used to filter messages:

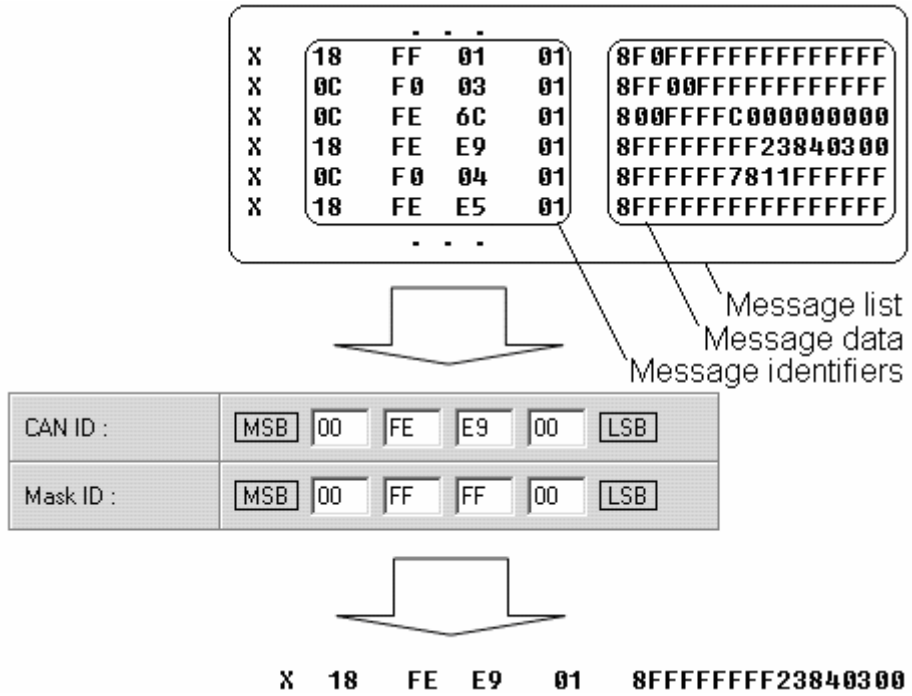

When certain message is filtered, FM4100 checks which data bytes should be sent to server. Document indicates that 5-8 bytes are used in FMS standard:

Data Byte 5	Data Byte 6	Data Byte 7	Data Byte 8	Byte No
8 7 6 5 4 3 2 1	8 7 6 5 4 3 2 1	8 7 6 5 4 3 2 1	8 7 6 5 4 3 2 1	Bit No
Total fuel used 0,5 L / Bit gain 0 L offset 5.2.5.66 SPN 250	Total fuel used 0,5 L / Bit gain 0 L offset 5.2.5.66 SPN 250	Total fuel used 0,5 L / Bit gain 0 L offset 5.2.5.66 SPN 250	Total fuel used 0,5 L / Bit gain 0 L offset 5.2.5.66 SPN 250	Name values values values SAE ref SPN

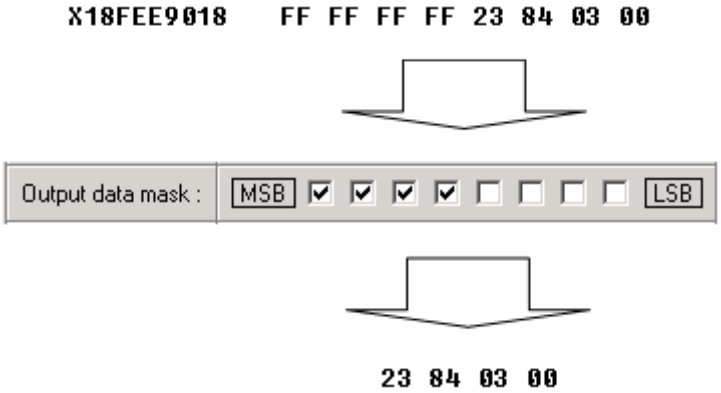

Data bytes are filtered by selecting the checkboxes in Output data mask. Note, that configurator has them listed starting with MSB.

After message is filtered it is attached to the data packet and sent to the server. Values are returned in HEX. 00 03 84 23(HEX) = 230435(DEC). Notice, that data resolution is 0.5L/bit gain – value has to be multiplied by 0.5, therefore vehicle used total of 115217,5 liters of fuel since it was manufactured.

7 SMS COMMAND LIST

SMS commands are used to identify FM4 current state, possible configuration errors, perform reset, set parameters, switch on/off outputs, etc.

SMS command should be sent along with module login and password and sender number bust be entered in the authorized number list (if at least one other number is entered). Please see SMS settings in chapter 6.9 for more details.

Note, that Getparam and Setparam commands use parameters listed in the chapter below.

35 Figure Module login, password and authorized numbers settings

SMS structure is as follows:
<login> <password> <command>
Example:
opa opa getgps
SMS command list and description:

Command	Description	Response
getstatus	Modem Status information	Yes
getweektime	Current device time, Day of Week and amount of minutes passed since start of week	Yes
getops	List of currently available GSM operator	Yes
getcfgtime	Date and Time of last successful configuration	Yes
getgps	Current GPS data and time	Yes
loadprofile#	Load specified profile into	Yes

	RAM Engine Profile. # - number of profile to load	
cpureset	Reset CPU	No
rstallprof	Reset all FLASH profiles to default profile	No
getver	Device / Modem / Code version information	Yes
getstack	Device maximum task stack load information	Yes
getinfo	Device runtime system information	Yes
deleterecords	Delete all records saved on FLASH	No
getio	Readout digital inputs and outputs, analog inputs	Yes
readio #	Readout input value according entered ID, # - ID value	Yes
Setdigout ####	set digital outputs 0 – OFF, 1 – ON DO1 DO2 DO3 DO4	Yes
getparam #	Readout parameter value according entered ID. # - ID value.	Yes
setparam # #	Set parameter value according entered ID and Value. 1.# - ID value. 2.# - New Parameter Value	Yes
flush #,#,#,#,#,#,#	Initiates all data sending to specified target server 1.# - IMEI 2.# - APN 3.# - LOGIN 4.# - PASS 5.# - IP 6.# - PORT 7.# - MODE (0-TCP/1-UDP)	Yes

7.1 getstatus

Response details	Description
Data Link	Indicate module connection to server at the moment: 0 – Not connected, 1 – connected
GPRS	Indicate if GPRS is available at the moment
Phone	Voice Call status: 0 – ready, 1 – unavailable, 2 – unknown, 3 – ringing, 4 – call in progress, 5 – asleep
SIM	SIM Status: 0-ready, 1-pin, 2-puk, 3-pin2, 4-puk2
OP	Connected to GSM Operator: Numerical id of operator
Bat	Battery charge level [0-5]
Signal	GSM Signal Quality [0-5]
Service	GSM service availability (0 – unavailable, 1 – available)
NewSMS	Indicate if new message received
Roaming	0 – Home Network, 1 – roaming
SMSFull	SMS storage is full? 0 – ok, 1 – SMS storage full

Example: Data Link: 0 GPRS: 1 Phone: 0 SIM: 0 OP: 24602 Bat: 4 Signal: 5 Service: 1 NewSMS: 0 Roaming: 0 SMSFull: 0

7.2 getweektime

Response details	Description
Clock Sync	Indicates system clock synchronization status. 0 – System is not synchronized, 1 – System synchronized
DOW	Day Of Week – indicates current day of week starting from 0 – Monday, 1 – Tuesday, etc.
Time	Indicates current GMT time
WeekTime	Indicates time in minutes starting from Monday 00:00 GMT

Example: Clock Sync: 1 DOW: 4 Time 12:58 Weektime: 6538

7.3 getops

Response details	Description
LIST	Returns list of current available allowed operators.

Example: GSM OP LIST: 0. 24602

7.4 getcfgtime

Response details	Description
Date/Time	Returns last performed configuration date and time.

Example: Last Configuration was performed on: 2010.4.15 5:45:19

7.5 getgps

Response details	Description
GPS	Indicates valid (1) or invalid (0) GPS data
Sat	Count of currently available satellites
Lat	Latitude (Last good Latitude)
Long	Longitude (Last good Longitude)
Alt	Altitude, m
Speed	Ground speed, km/h
Dir	Ground direction, degrees
Date	Current date
Time	Current GMT time

Example: GPS:1 Sat:7 Lat:54.71473 Long:25.30304 Alt:147 Speed:0 Dir:77 Date: 2007/8/24 Time: 13:4:36

7.6 loadprofile#

Returns acknowledgment of successful profile changing from currently used to preferred.
Example: Profile Nr.1 successfully changed to Profile Nr.3

7.7 getver

Response details	Description
Code Ver	Firmware version
Device IMEI	IMEI
Device ID	Device ID is used to detect which type of configuration to load
Modem App Ver	Version of modem application
Modem REV Ver	Modem Firmware version

Example: Code Ver:0.48.17 Device IMEI:353976010139156 Device ID:000001 Modem APP Ver:2007.11.07 Modem REV Ver:04.13.00

7.8 getstack

Response details	Description
Maximum stack load	Indicates maximum stack load from last start
At Address	Process address which caused maximum stack load

Example: Maximum Stack Load:53% At Address:000155DB

7.9 getio

Response details	Description
DI#	Digital Input state
DO#	Digital Output state
AI#	Analog Input state

Example: DI1:0 DI2:0 DI3:0 DI4:0 DO1:0 DO2:0 DO3:0 DO4:0 AI1:0mV AI2:0mV AI3:0mV AI4:0mV

7.10 getinfo

Response details	Description
INI	Device Initialization Time
RTC	RTC Time
RST	Restart Counter
ERR	Error Counter
SR	Number of Sent Records
BR	Number of broken records
CF	Profile CRC Fail counter
FG	Failed GPRS counter
FL	Failed link counter
UT	UPD Timeout counter
P#	Current profile, P#: 0 – inactive profile, 1 – active profile
SMS	Sent SMS Counter
NOGPS	No GPS Timer
GPS	GPS receiver state. 0 – OFF, 1 – restarting, 2 – ON but no fix, 3 – ON and operational, 4 – sleep mode
SAT	Average satellites
RS	Reset Source Identification

Example: INI:2007/8/24 10:15 RTC:2007/8/24 12:43 RST:2 ERR:11 SR:182 BR:0 CF:0 FG:0 FL:0 UT:0 P:1 P0:0 P1:1 P2:0 P3:0 P4:0 SMS:2 NOGPS:0:0 GPS:3 SAT:7 RS:7

7.11 readio

Response details	Description
ID	IO element ID
Value	IO Element value

Example: IO ID:3 Value:0

7.12 setdigout

Sets digital outputs to ON or OFF state. Value is written as a row for OUT1, OUT2, OUT3, OUT4 values.

Example: 'setdigout 0100' will set OUT2 to high level, while OUT1, OUT3 and OUT4 to low level.

7.13 getparam

Read parameter value. ID consists of 4 digits – first digit identifies profile, second, third and fourth identifies parameter ID as described in Parameter List chapter.

Response details	Description

ID	Profile number and parameter ID
Value	Parameter value

Example: 'getparam 1245' command will request server IP address in profile1.

7.14 setparam ####

Sets new value for parameter. ID consists of 4 digits – first digit identifies profile, second, third and fourth identifies parameter ID as described in Parameter List chapter. In value field a new parameter value is entered.

Example: 'setparam 1245 127.0.0.1' will change configured IP address in profile1 with new value

7.15 flush #,#,#,#,#,#,#

Initiates all data sending by GPRS to specified target server. Comma separated parameters go as numbered:

1.# - IMEI
2.# - APN
3.# - GPRS LOGIN
4.# - GPRS PASSWORD
5.# - IP
6.# - PORT
7.# - MODE (0-TCP/1-UDP)

Parameters are separated by comma (no spaces needed). In case you don't need to enter parameter (Login/Pass) – do not put space, simply put comma and write next parameter.

Example: opa opa flush 353976012555151,banga,,,212.47.99.62,12050,0

Response details	Description
FLUSH SMS Accepted	FLUSH SMS Accepted
# records found on FLASH	Number of records found on FLASH
Minimum Records to Send: #	Number of minimum saved records to send
GPRS Enabled: #	State of the GPRS connection, 0 – disabled; 1 – enabled
Time Sync: #	Indicates time synchronization on the device, 0 – not synchronized; 1 – synchronized

Example: FLUSH SMS Accepted. 11 records found on FLASH. Minimum Records to Send: 1. GPRS Enabled: 1. Time Sync: 1.

8 Parameter list

8.1 Parameters value types

```
S8 – Signed Char
U8 – Unsigned Char
U32 – Unsigned Integer
U16 – Unsigned Short
S8[n] – String of n Char
```

8.2 Global Parameters

Global parameters are profile independent parameters.

8.2.1 Profile switch (ID=100)

Minimum value	Maximum value	Recommended value	Goes with (depends on) parameters	Value type
0	1	-	GSM Operator list (ID=271) IO#0 priority (ID=301)	S8

8.2.2 Microphone level (ID=101)

Microphone level parameter sets microphone sensitivity. Value may vary from lowest sensitivity to highest microphone sensitivity level.

Minimum value	Maximum value	Recommended value	Goes with (depends on) parameters	Value type
0	14	10	Speaker level (ID=102) Call number (ID 103) Call trigger (ID 104)	S8

8.2.3 Speaker level (ID=102)

Speaker level parameter sets speaker loudness. Value may vary from mute mode to highest speaker loudness level.

Minimum value	Maximum value	Recommended value	Goes with (depends on) parameters	Value type
0	100	70	Microphone level (ID=101) Call number (ID 103) Call trigger (ID 104)	S8

8.2.4 Call number (ID 103)

Number to call from module by triggering digital input.

Minimum value	Maximum value	Recommended value	Goes with (depends on) parameters	Value type
0	17	Maximum 17 digit number	Microphone level (ID=101) Speaker level (ID=102) Call trigger (ID 104)	S8[16]

8.2.5 Call trigger (ID 104)

Digital input to call and answer trigger.

Minimum value	Maximum value	Recommended value	Goes with (depends on) parameters	Value type
1	4	1	Microphone level (ID=101) Speaker level (ID=102) Call number (ID 103) Voice Call Auto Answer after rings (ID=230)	S8

8.2.6 Record search (ID 105)

Record search parameter is responsible for record searching order. Value of 0 arranging data starting from newest, while value of 1 arranging data starting from oldest.

Minimum value	Maximum value	Recommended value	Goes with (depends on) parameters	Value type
0	1	-	**Data Send interval (ID=270)**	S8

8.3 Data acquisition and sending parameters

FM4 module is able to collect data using two methods: time based data acquiring and distance based data acquiring method.

8.3.1 Time based acquire interval (ID=11)

Time interval in seconds, indicating condition to acquire new record.

Minimum value	Maximum value	Recommended value	Goes with (depends on) parameters	Value type
1	9999999	5	**Distance based acquire interval (ID=12)** **Angle based coordinate acquisition (ID=13)**	U32

8.3.2 Distance based acquire interval (ID=12)

Distance in meters, indicating condition to acquire new record. Record is stored when the distance between previous record is greater than parameter's value.

Minimum value	Maximum value	Recommended value	Goes with (depends on) parameters	Value type
1	65535	50	**Time based acquire interval (ID=11)** **Angle based coordinate acquisition (ID=13)**	U16

8.3.3 Angle based coordinate acquisition (ID=13)

Angle in degrees, indicating condition to acquire new record. If angle difference between last recorded coordinate and current position is greater than defined value, new record is stored. This parameter is operational, when speed is higher then 10km/h.

Minimum value	Maximum value	Recommended value	Goes with (depends on) parameters	Value type
1	359	10	**Time based acquire interval (ID=11)** **Distance based acquire interval (ID=12)**	U32

8.3.4 Data Send interval (ID=270)

Time interval in seconds, indicating frequency of sending data to server.

Minimum value	Maximum value	Recommended value	Goes with (depends on) parameters	Value type
0	65535	5	**GPRS Enable (ID=240)** **GPRS Data send week time schedule (ID=272)** **Minimum records number in packet (ID=232)**	U16

8.3.5 Minimum records number in packet (ID=232)

Minimum number of records in one data packet that can be sent to server. This parameter has higher priority than Data Send interval (ID=270).

Minimum value	Maximum value	Recommended value	Goes with (depends on) parameters	Value type
1	25	1	**Time based acquire interval (ID=11)** **Distance based acquire interval (ID=12)** **GPRS Data send week time schedule (ID=272)** **Data Send interval (ID=270)**	U8

8.3.6 GPRS Enable (ID=240)

Parameter allows or does not allow using GPRS. If GPRS is not allowed value is 0, if GPRS is allowed – 1.

Minimum value	Maximum value	Recommended value	Goes with (depends on) parameters	Value type
0	1	1	**Data Send interval (ID=270)** Minimum records number in packet (ID=232) GPRS Data send week time schedule (ID=272)	S8

8.3.7 GSM Operator list (ID=271)

Parameter defines operator list. According to this list module selects operating profile. GSM operator codes are comma separated. Example: 24601, 24602, 24705…24503

Minimum value	Maximum value	Recommended value	Goes with (depends on) parameters	Value type
Empty	-	-	-	U32

8.3.8 GPRS Data send week time schedule (ID=272)

This parameter manages when it is allowed to open GPRS context. When module starts it is prohibited to open the context. When modem's GPRS context is being closed (for example changing network) it is allowed to open it only at defined time. It is possible to allow connections every 10 minutes up to once per day.

Example value: 7FFFFFFFFFFFFFFFFFFFFFFFFFFFFFFFFFFF

Format is described in chapter 8.3.10

8.3.9 SMS Data send week time schedule (ID=273)

Parameter defines SMS data sending according to week time schedule. This parameter is used to set data sending on selected week days and hours. Minimum time step is 10 minutes.

Example value: 7FFFFFFFFFFFFFFFFFFFFFFFFFFFFFFFFFFF

Format is described in chapter 8.3.10

8.3.10 Schedule parameter format:

Time is defined as 19 byte array. First byte of array defines week days, the rest 18 bytes define timestamps with 10 minute interval. In first byte, first bit (LSB) defines if module should connect to GPRS (send SMS) on Monday, second bit – on Tuesday and so on up to seventh bit – which means Sunday. Eighth bit (MSB) is not used. If bits value is 0 then device is not allowed to open GPRS context, but if it is already open – does not close it. If value is 1 it will work as day minutes are defined in rest of the bytes.

Day's minutes are defined by 18 bytes (144 bits). Every n'th bit (beginning from the first bit (LSB) and ending 18 bytes 8'th bit (MSB)) indicates every 10'th minute of the day (day has 1440 minutes).

Sample:

GPRS will be allowed on Monday to Friday at 8:00 and 16:00 GMT the following value should be configured:

00011111 00000000 00000000 00000000 000000000 00000000 00000000 00000001 00000000 00000000 00000000 00000000 00000000 00000001 00000000 00000000 00000000 00000000 00000000

Red bits indicate that GPRS will be allowed everyday except Saturdays and Sundays. Blue bits indicate 480 and 720 minutes (480min = 8h and 720min = 16h). So the parameter value should be:

1F 00 00 00 00 00 00 01 00 00 00 00 00 01 00 00 00 00 00

It should be sent as UTF8 encoded string.

8.3.11 SMS Data send allow (ID=250)

Parameter allows or does not allow using binary SMS to send Avl data. If SMS use is not allowed value is 0, and 1 if SMS use is allowed.

Minimum value	Maximum value	Recommended value	Goes with (depends on) parameters	Value type
0	1	0	**SMS Data send week time schedule (ID=273)** **SMS Data send allow (ID=250)** **SMS Send Timeout (ID=251)**	S8

8.3.12 SMS Send Timeout (ID=251)

Parameter defines interval in seconds during which module tries to send SMS.

Minimum value	Maximum value	Recommended value	Goes with (depends on) parameters	Value type
1	65535	50	**SMS Data send week time schedule (ID=273)** **SMS Data send allow (ID=250)**	U16

8.3.13 24 Records time step (ID=274)

Module is able to send binary SMS which contains 24 coordinates. Parameter ID=274 defines time step (in milliseconds) between each coordinate.

Minimum value	Maximum value	Recommended value	Goes with (depends on) parameters	Value type
1	4294967295	3600000	**SMS Data send allow (ID=250)** **SMS Send Timeout (ID=251)** **SMS Data send week time schedule (ID=273)**	U32

8.4 SMS settings and parameters

8.4.1 SMS User login (ID=252)

User login is used to ensure module security. Used in every SMS that is sent to device.

Example: ba321

Minimum value	Maximum value	Recommended value	Goes with (depends on) parameters	Value type
empty	5 char string	-	**SMS User password (ID=253)** **Server Number (ID=260)** **Authorized Number #1 (ID=261)**	S8[5]

8.4.2 SMS User password (ID=253)

User password is used to ensure module security. Used in every SMS that is sent to device.

Example: ab123

Minimum value	Maximum value	Recommended value	Goes with (depends on) parameters	Value type
Empty	5 char string	-	**SMS User login (ID=252)** **Server Number (ID=260)** **Authorized Number #1 (ID=261)**	S8[5]

8.4.3 Server Number (ID=260)

Parameter value is server GSM number. To this number the SMS with 24 coordinates is sent.

Example: 37060012345

Minimum value	Maximum value	Recommended value	Goes with (depends on) parameters	Value type
Empty	16 char string	-	**SMS Data send allow (ID=250)**	S8[16]

8.4.4 Authorized Number #1 (ID=261)

Parameters ID=262 to ID=269 have values for 8 more authorized numbers If at least one number is entered then only those number can send messages to device.

Example: 37060012346

Minimum value	Maximum value	Recommended value	Goes with (depends on) parameters	Value type
Empty	16 char string	-	**SMS Data send allow (ID=250)**	S8[16]

8.5 GPRS access and address settings

8.5.1 APN Name (ID=242)

Parameter defines GPRS Access Point Name.

Minimum value	Maximum value	Recommended value	Goes with (depends on) parameters	Value type
Empty	32 char string	-	**GPRS Enable (ID=240)** **APN username (ID=243)** **APN Password (ID=244)**	S8[32]

8.5.2 APN username (ID=243)

Parameter defines APN username. In case operator does not use username for login, value should be empty.

Minimum value	Maximum value	Recommended value	Goes with (depends on) parameters	Value type
Empty	30 char string	-	**APN Name (ID=242)** **APN Password (ID=244)**	S8[30]

8.5.3 APN Password (ID=244)

Parameter defines APN password. . In case operator does not use password for login, value should be empty.

Minimum value	Maximum value	Recommended value	Goes with (depends on) parameters	Value type
Empty	30 char string	-	**APN Name (ID=242)** **APN username (ID=243)**	S8[30]

8.5.4 Data send protocol (ID=231)

Parameter defines GPRS data transport protocol. Module can use TCP or UDP transport protocol to send data to server. For TCP protocol value is 0, for UDP protocol value is 1.

Minimum value	Maximum value	Recommended value	Goes with (depends on) parameters	Value type
0	1	0	**GPRS Enable (ID=240)**	U8

8.5.5 Server IP address (ID=245)

Parameter defines Avl data destination server IP address. Example: 212.47.99.62

Minimum value	Maximum value	Recommended value	Goes with (depends on) parameters	Value type
Empty	16 char string	-	**GPRS Enable (ID=240)** **Server port number (ID=246)**	S8[16]

8.5.6 Server port number (ID=246)

Parameter defines Avl data destination server port number. Example: 12050

Minimum value	Maximum value	Recommended value	Goes with (depends on) parameters	Value type
Empty	65535	-	**GPRS Enable (ID=240)** **Server IP address (ID=245)**	U16

8.6 Geofence zones settings and parameters

In this chapter it is explained how to get all parameters for the first GeoFence zone (all ID numbers are for the 1st zone). And at the end of the chapter (part 1.6.7) is presented a table with the IDs of all the rest GeoFence zones.

8.6.1 GeoFence border width (ID=20)

GeoFence border thickness, measured in meters.

Minimum value	Maximum value	Recommended value	Goes with (depends on) parameters	Value type
100	9999999	1000	**GeoFence Zone #1 Configuration Parameter (ID=30)** **All the rest zones**	U32

8.6.2 GeoFence Zone #1 Configuration Parameter (ID=30)

GeoFence Zone #1 Configuration is 1st zone basic settings parameter: GeoFence zone shape, priority, zone entering event, zone leaving event. There are two GeoFence zone shapes: circle, rectangle. GeoFence Zone priority has eight levels (0 to 7). Parameter value is four bytes that have bit encoded values.

0 bit – GeoFence zone shape
1-3 bits – GeoFence event priority
4 bit – Zone entering event
5 bit – Zone leaving event
6-31 bits reserved

Example:

Value to set: 51 (integer) is [M]00110011[L], where GeoFence Zone shape is Rectangular, priority of 1, Zone entering event is enabled, Zone leaving event is enabled.

Minimum value	Maximum value	Recommended value	Goes with (depends on) parameters	Value type
0	-	-	**GeoFence border width (ID=20)** **GeoFence x1 (ID=31)** **GeoFence y1 (ID=32)** **GeoFence x2 (ID=33)** **GeoFence y2 (ID=34)**	U32

8.6.3 GeoFence x1 (ID=31)

Parameter has two meanings dependent on zone shape. If shape is rectangular, then ID=31 is left down corner X coordinate in WGS. If shape is circle, then ID=31 is center of that circle X coordinate in WGS.

Sample value: 25.30528

Minimum value	Maximum value	Recommended value	Goes with (depends on) parameters	Value type
-180.0	180.0	-	**GeoFence border width (ID=20) GeoFence Zone #1 Configuration Parameter (ID=30)**	Float

8.6.4 GeoFence y1 (ID=32)

Parameter has two meanings dependent on zone shape. If shape is rectangular, then ID=32 is left down corner Y coordinate in WGS. If shape is circle, then ID=32 is center of that circle Y coordinate in WGS.

Minimum value	Maximum value	Recommended value	Goes with (depends on) parameters	Value type
-90.0	90.0	-	**GeoFence border width (ID=20) GeoFence Zone #1 Configuration Parameter (ID=30)**	Float

8.6.5 GeoFence x2 (ID=33)

Parameter has two meanings dependent on zone shape. If shape is rectangular, then ID=33 is right upper corner X coordinate in WGS. If shape is circle, then ID=33 is radius of circle with center of ID=31 and ID=32.

Minimum value	Maximum value	Recommended value	Goes with (depends on) parameters	Value type
-180.0	180.0	-	**GeoFence border width (ID=20) GeoFence Zone #1 Configuration Parameter (ID=30)**	Float

8.6.6 GeoFence y2 (ID=34)

If shape is rectangular, then ID=34 is right upper corner Y coordinate in WGS. If shape circle, ID=34 is not used.

Minimum value	Maximum value	Recommended value	Goes with (depends on) parameters	Value type
-90.0	90.0	-	**GeoFence border width (ID=20) GeoFence Zone #1 Configuration Parameter (ID=30)**	Float

8.6.7 All the rest zones

Other 19 GeoFence zone's parameters have the same logic as shown in GeoFence Zone #1.

GeoFence Zone Number	GeoFence Zone's parameters	GeoFence Zone Number	GeoFence Zone's parameters

2	**40 – 44**	**12**	**140 – 144**
3	**50 – 54**	**13**	**150 – 154**
4	**60 – 64**	**14**	**160 – 164**
5	**70 – 74**	**15**	**170 – 174**
6	**80 – 84**	**16**	**180 – 184**
7	**90 – 94**	**17**	**190 – 194**
8	**100 – 104**	**18**	**200 – 204**
9	**110 – 114**	**19**	**210 – 214**
10	**120 – 124**	**20**	**220 – 224**
11	**130 – 134**		

8.7 System parameters

8.7.1 Voice Call Auto Answer after rings (ID=230)

Parameter defines rings number after which module automatically answers incoming voice call.

Minimum value	Maximum value	Recommended value	Goes with (depends on) parameters	Value type
0	255	3	-	U8

8.7.2 Device Power mode (ID=0)

Device can operate in two modes: active or sleep. In active mode (value 0) module is able to operate all tasks, while in sleep mode (value 1) module reduces level of power usage.

Minimum value	Maximum value	Recommended value	Goes with (depends on) parameters	Value type
0	1	-	-	Enum

8.7.3 GPS Enable (ID=10)

Parameter enables or disables GPS receiver. When GPS is disabled value is 0, and 1 when enabled.

Minimum value	Maximum value	Recommended value	Goes with (depends on) parameters	Value type
0	1	-	**Time based acquire interval (ID=11)** **Distance based acquire interval (ID=12)** **Angle based coordinate acquisition (ID=13)** Geofence zones settings and parameters	S8

8.7.4 Profile name (ID=710)

Parameter defines current profile name.

Minimum value	Maximum value	Recommended value	Goes with (depends on) parameters	Value type
0	10 char string	numbered value	-	S8[10]

8.7.5 Sleep mode (ID=000)

Parameter enables or disables sleep mode for FM: 0 – disabled, 1 – enabled.

Minimum value	Maximum value	Recommended value	Goes with (depends on) parameters	Value type
0	1	-	-	S8

8.8 IO properties

IO properties – are additional data sources which are recorded along with usual GPS data.

8.8.1 IO#0 property parameter (ID=300)

Parameter defines IO property value. Possible values:

0	1	2	3	4	5	6	7	8	9	10	11
Disabled	Enabled	CAN0	CAN1	CAN2	CAN3	CAN4	CAN5	CAN6	CAN7	CAN8	CAN9

If value is 'CAN', then CAN data is automatically added to this property.

Minimum value	Maximum value	Recommended value	Goes with (depends on) parameters	Value type
0	byte	-	**IO#0 priority (ID=301)** IO#0 High level (ID=302) IO#0 Low level (ID=303) **IO#0 logic operand (ID=304)** **IO#0 averaging length (ID=305)**	S8

8.8.2 IO#0 priority (ID=301)

Parameter defines IO property type of priority: 0 is low, 1 – high, 2 – panic, 3 – not in use, 4 – SW21, 5 – SW22, 6 – SW23, 7 –SW4.

Minimum value	Maximum value	Recommended value	Goes with (depends on) parameters	Value type
0	3	**0**	IO#0 High level (ID=302) IO#0 Low level (ID=303) IO#0 logic operand (ID=304) IO#0 averaging length (ID=305)	S8

8.8.3 IO#0 High level (ID=302)

Parameter defines high value of triggered IO property. This parameter is used to set thresholds for IO properties to generate events.

Minimum value	Maximum value	Recommended value	Goes with (depends on) parameters	Value type
-2147483648	2147483648	1	**IO#0 property parameter (ID=300)** **IO#0 priority (ID=301)** IO#0 Low level (ID=303) **IO#0 logic operand (ID=304)**	S32

			IO#0 averaging length (ID=305)	

8.8.4 IO#0 Low level (ID=303)

Parameter defines low value of triggered IO property. This parameter is used to set thresholds for IO properties to generate events.

Minimum value	Maximum value	Recommended value	Goes with (depends on) parameters	Value type
-2147483648	2147483648	0	**IO#0 property parameter (ID=300)** **IO#0 priority (ID=301)IO#0 High level (ID=302)** **IO#0 logic operand (ID=304)** **IO#0 averaging length (ID=305)**	S32

8.8.5 IO#0 logic operand (ID=304)

Parameter defines when event is sent: 0: on range exit, 1: on range entrance, 2: both, 3: monitoring

Minimal value	Maximum value	Recommended value	Goes with (depends on) parameters	Value type
0	2	2	IO#0 priority (ID=301)IO#0 **High level (ID=302)**IO#0 **Low level (ID=303)** IO#0 averaging length (ID=305) IO#0 property parameter **(ID=300)**	S8

8.8.6 IO#0 averaging length (ID=305)

Parameter defines IO property sample length to average. If no averaging needed default value is 1.

Minimum value	Maximum value	Recommended value	Goes with (depends on) parameters	Value type
0	2147483648	1	**IO#0 property parameter (ID=300)** **IO#0 priority (ID=301)** IO#0 High level (ID=302) IO#0 Low level (ID=303) **IO#0 logic operand (ID=304)**	S32

Other IO property elements are configuring in same logic. All IO elements parameter list is below.

IO Element Number	**IO element parameters**	**IO Element Number**	**IO element parameters**
IO#0 – Analog input 1	300 – 305	IO#15 – GPS power	450 – 455
IO#1 – Analog input 2	310 – 315	IO#16 – Fuel counter	460 – 465
IO#2 – Analog input 3	320 – 325	IO#17 – GSM quality	470 – 475
IO#3 – Analog input 4	330 – 335	IO#18 – Current profile	480 – 485
IO#4 – Digital input 1	340 – 345	IO#19 – Speed	490 – 495

IO#5 – Digital input 2	350 – 355	IO#20 – Odometer	500 – 505
IO#6 – Digital input 3	360 – 365	IO#21 – Movement event	510 – 515
IO#7 – Digital input 4	370 – 375	IO#22 – Dallas sensor2	520 – 525
IO#8 – Acceleration	380 – 385	IO#23 – Dallas sensor3	530 – 535
IO#9 – Dallas sensor1	390 – 395	IO#24 – n/a	540 – 545
IO#10 – iButton	400 – 405	IO#25 – n/a	550 – 555
IO#11 – Battery voltage	410 – 415	IO#26 – n/a	560 – 565
IO#12 – Battery level	420 – 425	IO#27 – n/a	570 – 575
IO#13 – Power level	430 – 435	IO#28 – n/a	580 – 585
IO#14 – PCB temperature	440 – 445	IO#29 – n/a	590 – 595

8.9 CAN (FMS) interface parameters

8.9.1 CAN Baud Rate (ID=600)

Parameter defines CAN bus baud rate. For Auto Baud rate ID=600 value is 0. Available baud rates are 250 and 500 kbps.

Minimum value	Maximum value	Recommended value	Goes with (depends on) parameters	Value type
0	500	125	**CAN#0 Element Id type (ID=610)** **CAN#0 Data mask (ID=611)** **CAN#0 Identifier ID (ID=612)** **CAN#0 Identifier Mask ID (ID=613)**	U32

8.9.2 CAN#0 Element Id type (ID=610)

Parameter defines CAN element ID length. CAN element ID could be 11 or 29 bits length. For 11 bits ID parameter value is 0, for 29 bits ID – 1.

Minimum value	Maximum value	Recommended value	Goes with (depends on) parameters	Value type
0	1	1	**CAN#0 Data mask (ID=611)** **CAN#0 Identifier ID (ID=612)** **CAN#0 Identifier Mask ID (ID=613)**	U8

8.9.3 CAN#0 Data mask (ID=611)

Parameter defines CAN data mask. This parameter is 8 bit length and indicates which data bytes of CAN message are sent for calculation and which are ignored. Bit value 1 means that CAN data byte will be preceded ant sent to server.

Example: 00110011 is 51 integer.

Minimum value	Maximum value	Recommended value	Goes with (depends on) parameters	Value type
0	FF	-	**CAN#0 Element Id type (ID=610)** **CAN#0 Identifier ID (ID=612)** **CAN#0 Identifier Mask ID**	U8

			(ID=613)	

8.9.4 CAN#0 Identifier ID (ID=612)

Parameter defines CAN identifier. ID can be 11 or 29 bits length.

Example: 18FEE925 (total fuel used)

Minimum value	Maximum value	Recommended value	Goes with (depends on) parameters	Value type
0	FFFFFFFF	-	**CAN#0 Element Id type (ID=610)** **CAN#0 Data mask (ID=611)** **CAN#0 Identifier Mask ID (ID=613)**	U32

8.9.5 CAN#0 Identifier Mask ID (ID=613)

Parameter defines which part of CAN message identifier is sent for calculation and which are ignored. Encoded as 29 or 11 bit value.

Example: to filter the above mentioned total fuel used PGN (FEE9) 00000000111111111111111100000000 is FFFF00.

Minimum value	Maximum value	Recommended value	Goes with (depends on) parameters	Value type
0	FFFFFFFF	-	**CAN#0 Element Id type (ID=610)** **CAN#0 Data mask (ID=611)** **CAN#0 Identifier ID (ID=612)**	U32

The rest of CAN elements are configured in same sequence. CAN elements and parameters IDs are listed below.

CAN Element Number	**CAN Element parameters**
CAN#1	620 – 623
CAN#2	630 – 633
CAN#3	640 – 643
CAN#4	650 – 653
CAN#5	660 – 663
CAN#6	670 – 673
CAN#7	680 – 683
CAN#8	690 – 693
CAN#9	700 – 703

8.10 Accelerometer Parameters

8.10.1 Delta X (ID=281)

Parameter defines accelerometer X axis angle change, which is used to detect movement

Minimum value	Maximum value	Recommended value	Goes with (depends on) parameters	Value type

0	359	1	**Delta Y (ID=282)** **Delta Y (ID=283)** **Start timeout (ID=284)** **Stop timeout (ID=285)**	U32

8.10.2 Delta Y (ID=282)

Parameter defines accelerometer Y axis angle change, which is used to detect movement

Minimum value	Maximum value	Recommended value	Goes with (depends on) parameters	Value type
0	359	1	**Delta X (ID=281)** **Delta Y (ID=283)** **Start timeout (ID=284)** **Stop timeout (ID=285)**	U32

8.10.3 Delta Y (ID=283)

Parameter defines accelerometer Y axis angle change, which is used to detect movement

Minimum value	Maximum value	Recommended value	Goes with (depends on) parameters	Value type
0	359	1	**Delta X (ID=281)** **Delta Y (ID=282)** **Start timeout (ID=284)** **Stop timeout (ID=285)**	U32

8.10.4 Start timeout (ID=284)

Parameter defines time interval to check for constant movement before status is changed to 'moving'.

Minimum value	Maximum value	Recommended value	Goes with (depends on) parameters	Value type
0	4294967295	1	**Delta X (ID=281)** **Delta Y (ID=282)** **Delta Y (ID=283)** **Stop timeout (ID=285)**	U32

8.10.5 Stop timeout (ID=285)

Parameter defines time interval to check for constant movement before status is changed to 'not moving'.

Minimum value	Maximum value	Recommended value	Goes with (depends on) parameters	Value type
0	4294967295	600	**Delta X (ID=281)** **Delta Y (ID=282)** **Delta Y (ID=283)** **Start timeout (ID=284)**	U32

9 DEBUG MODE

FM4 is able to transmit its current state when connected to PC using PORT1/2 cable. It is used to detect errors and provide information to possible solutions when operating as unexpected. Download Terminal from: http://213.226.139.30/Downloads/Software/Terminal.rar. After launching it choose baud rate 115200 and hardware control – none. Click on 'Start Log' button and save a new file. Then click 'Connect' to start receiving messages from FM4.

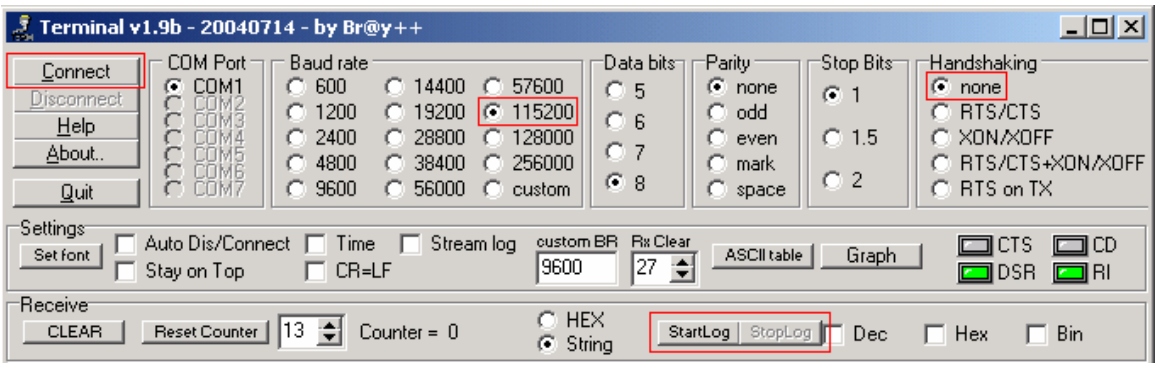

10 MOUNTING RECOMMENDATIONS

10.1 Connecting Wires

- Wires should be connected while module is not plugged in.
- Wires should be fastened to the other wires or non-moving parts. Try to avoid heat emitting and moving objects near the wires.
- The connections should not be seen very clearly. If factory isolation was removed while connecting wires, it should be applied again.
- If the wires are placed in the exterior or in places where they can be damaged or exposed to heat, humidity, dirt, etc., additional isolation should be applied.
- Wires cannot be connected to the board computers or control units.

10.2 Connecting Power Source

- Be sure that after the car computer falls asleep, power is still available on chosen wire. Depending on a car, this may happen in 5 to 30 minutes period.
- When module is connected, be sure to measure voltage again if it did not decrease.
- It is recommended to connect to the main power cable in the fuse box.

10.3 Connecting Ignition Wire

- Be sure to check if it is a real ignition wire – power does not disappear while starting the engine.
- Check if this is not an ACC wire (when key is in the first position, most electronics of the vehicle are available).
- Check if power is still available when you turn off any of vehicles devices.
- Ignition is connected to the ignition relay output. As alternative, any other relay, which has power output, when ignition is on may be chosen.

10.4 Connecting Ground Wire

- Ground wire is connected to the vehicle frame or metal parts that are fixed to the frame.
- If the wire is fixed with the bolt, the loop must be connected to the end of the wire.
- For better contact scrub paint from the place where loop is connected.

10.5 Connecting Antennas

- When placing antennas avoid easily reached places.
- Avoid GPS antenna placement under metal surfaces. GSM antenna must be placed with as little metal obstacles around it as possible.
- Avoid placing GSM antenna near car radio, speakers or alarm systems.

- GPS antenna must be placed so its state is as horizontal as possible (if antenna is leant more than 30 degrees, it is considered incorrect mounting).
- GPS antenna cable cannot be bent more than 80 degrees.
- GPS antenna must be placed sticker facing down

CORRECT

NOT CORRECT

It is recommended to place GPS antenna behind dashboard as close to the window as possible. A good example of GPS antenna placement is displayed in a picture below (area colored green).

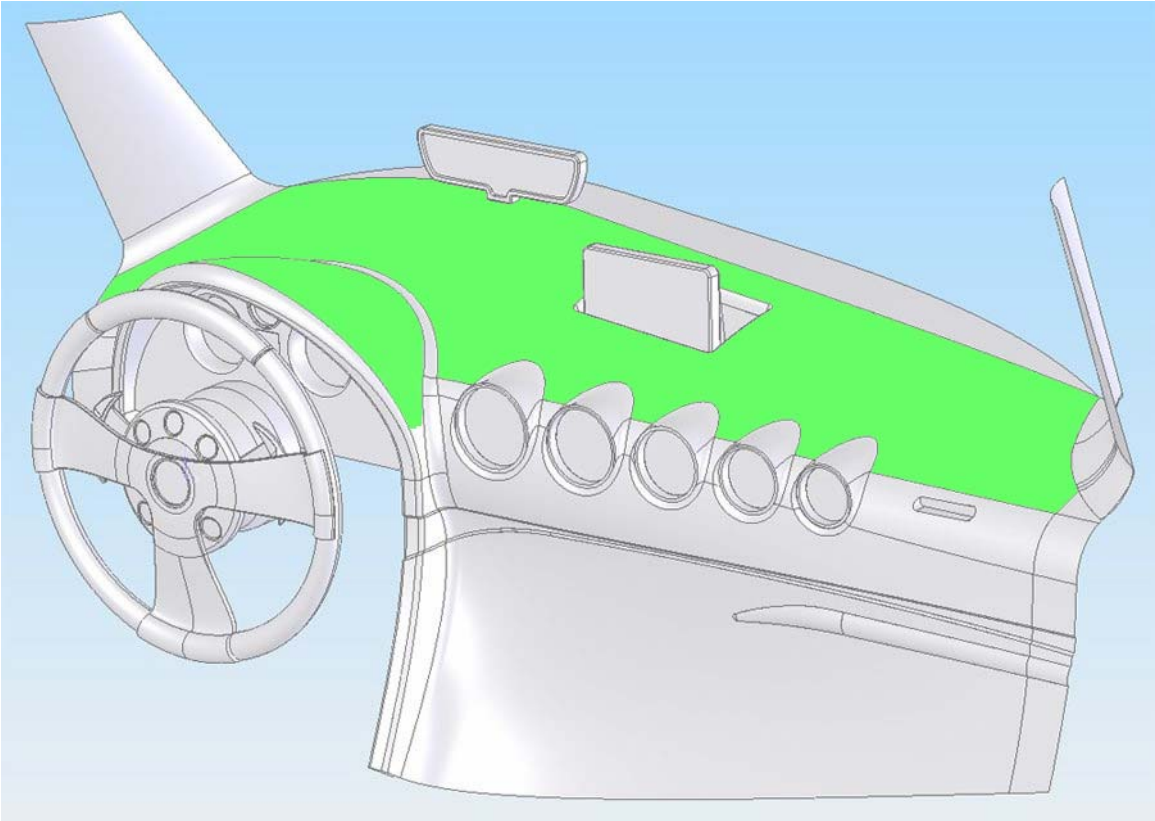

10.6 Module Installation

- Module should not be seen or easily reached.
- Module should be firmly fixed to the surface or cables.
- Module cannot be fixed to heat emitting or moving parts.
- SIM card should be inserted in the module while the connector is plugged off (while module has no power).

11 CHANGE LOG

Nr.	Date	New version number	Comments
1	086025	2.1	6.2.9 chapter revised
2	080819	2.2	Major revision.
3	080930	2.3	5.5 chapter added
4	081007	2.4	4 chapter revised
5	081028	2.5	8; 8.15 chapters revised
6	081031	2.6	3.5 chapter revised – immobilizer relay connection scheme added.
7	081111	2.7	3.5 chapter revised – added inverting relay connection scheme. Moved parameter and property list from Protocols document to User Manual.
8	081218	2.8	Fixed setparam and getparam command description, sleep mode conditions, voice functionality. Updated mounting recommendations.
9	090206	2.9	Revised chapter 1, updated firmware chapter
10	090505	3.0	I/O Settings updated with Monitoring