# FM3602/FM3612 User Manual
# V0.10

# Table of contents


**1 INTRODUCTION ..... 6**

1.1 ATTENTION ..... 6
1.2 INSTRUCTIONS OF SAFETY ..... 6
1.3 LEGAL NOTICE ..... 7
1.4 ABOUT DOCUMENT ..... 7

**2 BASIC DESCRIPTION ..... 8**

2.1 PACKAGE CONTENTS ..... 8
2.2 BASIC CHARACTERISTICS ..... 8
2.3 TECHNICAL FEATURE ..... 10
2.4 ELECTRICAL CHARACTERISTICS ..... 11
2.5 ABSOLUTE MAXIMUM RATINGS ..... 13
2.6 TECHNICAL INFORMATION ABOUT INTERNAL BATTERY ..... 13

**3 CONNECTION, PINOUT, ACCESSORIES ..... 14**

3.1 HOW TO INSERT SIM CARD AND ATTACH BATTERY INTO FM3602/FM3612 DEVICE: ..... 14
3.2 INSTALLING FM3602/FM3612 DRIVERS ..... 16
3.3 NAVIGATE LED ..... 17
3.4 MODEM LED ..... 17
3.5 STATUS LED ..... 18
3.6 FM3602/FM3612 SOCKET 2×6* ..... 18
3.7 USB ..... 19
3.8 ACCESSORIES ..... 20

**4 FIRMWARE ..... 24**

**5 OPERATIONAL BASICS ..... 25**

5.1 OPERATIONAL PRINCIPALS ..... 25
5.2 SLEEP MODES ..... 26
*5.2.1 Sleep mode ..... 26*
*5.2.2 Deep Sleep mode ..... 26*
5.3 VIRTUAL ODOMETER ..... 27
5.4 FEATURES ..... 27
*5.4.1 Scenarios ..... 27*
*5.4.2 Trip ..... 28*
*5.4.3 Geofencing ..... 29*
*5.4.4 iButton list ..... 29*
5.5 CONFIGURATION ..... 29
5.6 CONFIGURATOR ..... 29
5.7 READ RECORDS ..... 32
5.8 SYSTEM SETTINGS ..... 33
5.9 RECORDS SETTINGS ..... 35
5.10 GSM SETTINGS, GPRS PART ..... 35
5.11 GSM SETTINGS, SMS PART ..... 36
5.12 GSM SETTINGS, OPERATOR LIST ..... 37
5.13 DATA ACQUISITION MODE SETTINGS ..... 37
5.14 FEATURES SETTINGS ..... 42
*5.14.1 Scenarios settings ..... 42*
*5.14.2 Trip settings ..... 43*
*5.14.3 Geofencing settings ..... 44*
*5.14.4 SMS events ..... 47*
5.15 I/O SETTINGS ..... 52
*5.15.1 Monitoring ..... 57*
*5.15.2 Event Generating ..... 57*
*5.15.3 Hysteresis ..... 58*

**6 SMS COMMAND LIST ..... 58**

6.1 SMS COMMAND LIST ..... 58

*6.1.1 getstatus ..... 60*
*6.1.2 getweektime ..... 60*
*6.1.3 getops ..... 60*
*6.1.4 getcfgtime ..... 60*
*6.1.5 getgps ..... 61*
*6.1.6 ggps ..... 61*
*6.1.7 getver ..... 61*
*6.1.8 getinfo ..... 62*
*6.1.9 getio ..... 62*
*6.1.10 readio # ..... 62*
*6.1.11 setdigout ## Y1 Y2 ..... 63*
*6.1.12 getparam #### ..... 63*
*6.1.13 setparam #### ..... 63*
*6.1.13. getparam 1271 X/212 X ..... 63*
*6.1.14. setparam 1271 X/212 X ..... 63*
*6.1.15 readops # ..... 63*
*6.1.16 flush #,#,#,#,#,#,# ..... 63*
*6.1.17 sn # ..... 64*
*6.1.18 banlist ..... 64*
*6.1.19 crashlog ..... 64*
*6.1.20 lvcangetprog ..... 64*
*6.1.21 lvcansetprog # ..... 64*
*6.1.22 lvcangetinfo ..... 64*

**7 DEBUG MODE ..... 65**

**8 PARAMETER LIST ..... 65**

8.1 PARAMETERS VALUE TYPES ..... 65
8.2 SYSTEM PARAMETERS ..... 66

*8.2.1 Sleep Mode (ID=1000) ..... 66*
*8.2.2 Sleep timeout (ID=200) ..... 66*
*8.2.3 Analog Input value range (ID=1001) ..... 66*
*8.2.4 Stop Detection Source (ID=1002) ..... 66*
*8.2.5 Static Navigation (ID=1003) ..... 66*
*8.2.6 Ignition Source (ID=1004) ..... 67*
*8.2.7 Ignition Detection(ID=1008) ..... 67*
*8.2.8 Ignition Detection Timeout(ID=1009) ..... 67*
*8.2.9 GNSS FIX Timeout for Time Synchronization via NTP (ID=1007) ..... 67*
*8.2.10 Saving/Sending without time synchronization (ID=201) ..... 68*
*8.2.11 GNSS System (ID=202) ..... 68*

8.3 RECORDS PARAMETERS ..... 68

*8.3.1 Sorting (ID=1010) ..... 68*
*8.3.2 Active Data Link Timeout (ID=1011) ..... 68*
*8.3.3 Server Response Timeout (ID=1012) ..... 68*

8.4 GSM PARAMETERS ..... 69

*8.4.1 GPRS content activation (ID=1240) ..... 69*
*8.4.2 APN Name (ID=1242) ..... 69*
*8.4.3 APN username (ID=1243) ..... 69*
*8.4.4 APN Password (ID=1244) ..... 69*
*8.4.5 Domain (ID=1245) ..... 69*
*8.4.6 Target Server Port (ID=1246) ..... 70*
*8.4.7 Protocol (ID=1247) ..... 70*
*8.4.8 Use 2G only (ID=1248) ..... 70*
*8.4.9 SMS Login (ID=1252) ..... 70*
*8.4.10 SMS Password (ID=1253) ..... 70*
*8.4.11 SMS Time Zone (ID=1254) ..... 70*

8.4.12 SMS data sending settings (ID=1250) ... 71
8.4.13 SMS Data send week time schedule (ID=1273) ... 71
8.4.14 Authorized phone numbers (ID=1260-1269) ... 71
8.4.15 SMS Event PreDefined Numbers (ID=5000-5009) ... 71
8.4.16 Operator List (ID=1271 X) ... 71
8.5 DATA ACQUISITION MODES PARAMETERS ... 72
8.5.1 Home Network GSM operator code "Vehicle on STOP" parameters ... 72
8.5.2 Home Network GSM operator code "Vehicle MOVING" parameters ... 73
8.5.3 Roaming Network GSM operator code "Vehicle on STOP" parameters ... 74
8.5.4 Roaming Network GSM operator code "Vehicle MOVING" parameters ... 75
READ CHAPTER 8.5.1.4. ... 77
8.5.5 Unknown Network GSM operator code "Vehicle on STOP" parameters ... 77
8.5.6 Unknown Network GSM operator code "Vehicle MOVING" parameters ... 77
8.6 FEATURES PARAMETERS ... 79
8.6.1 Green Driving scenario (ID=1600) ... 79
8.6.2 Max Acceleration Force (ID=1602) ... 79
8.6.3 Max Braking Force (ID=1603) ... 79
8.6.4 Max Cornering Force (ID=1604) ... 79
8.6.5 Max allowed Speed (ID=1605) ... 80
8.6.6 OverSpeeding scenario (ID=1601) ... 80
8.6.7 Jamming detection scenario (ID=1606) ... 80
8.6.8 Immobilizer scenario (ID=1607) ... 80
8.6.9 Immobilizer ignition timeout(ID=1609) ... 80
8.6.10 iButton list checking scenario (ID=1608) ... 80
8.6.11 Excessive Idling detection (ID=1610) ... 81
8.6.12 Time to stationary (ID=1611) ... 81
8.6.13 Time to movement (ID=1612) ... 81
8.6.14 Trip (ID=1280) ... 81
8.6.15 Start Speed (ID=1281) ... 81
8.6.16 Ignition Off Timeout (ID=1282) ... 81
8.6.17 Trip distance mode (ID=1283) ... 82
8.6.18 Enable odometer value setting (ID=1284) ... 82
8.6.19 Continuous odometer value (ID=1285) ... 82
8.6.20 Remember iButton ID, while trip is detected(ID=1286) ... 82
8.6.21 Geofencing ... 82
8.6.22 AutoGeofencing ... 84
8.6.23 iButton List (ID=7000-7499) ... 85
8.7 I/O PARAMETERS ... 85
8.7.1 I/O#1 Priority (ID=2000) ... 85
8.7.2 I/O#1 High level (ID=2001) ... 85
8.7.3 I/O#1 Low level (ID=2002) ... 86
8.7.4 I/O#1 event generation type (ID=2003) ... 86
8.7.5 I/O#1 averaging length (ID=2004) ... 86
8.8 LV-CAN FEATURES ... 87
8.8.1 CAN Mode ... 87
8.8.2 I\O Send as 0 when ignition is off ... 88
8.9 SMS EVENT CONFIGURATION ... 88
8.9.1 I/O#1 element SMS event configuration (ID=5100) ... 88

**9 FM3602/FM3612 WITH LIGHT VEHICLES CAN ADAPTER LV-CAN200/ALL-CAN300 ... 90**

9.1 PURPOSE OF LIGHT VEHICLES CAN ADAPTER LV-CAN200/ALL-CAN300 ... 90
9.2 LV-CAN200/ALL-CAN300 PROGRAM NUMBER SELECTION ... 91
9.2.1 LV-CAN200/ALL-CAN300 program number configuration via SMS command ... 91
9.2.2 Selecting LV-CAN200/ALL-CAN300 program number manually ... 91
9.2.3 Program number logic change ... 92
9.3 CONNECTING FM3602/FM3612 WITH LIGHT VEHICLES CAN ADAPTER ... 93
9.4 CONNECTING LIGHT VEHICLES CAN ADAPTER ... 93
9.5 FM3602/FM3612 CONFIGURATION ... 94

*9.5.1 SCAN function ... 94*
*9.5.2 Offline configuration ... 95*
9.6 PARAMETERS ID ... 96
9.7 SMS CONFIGURATION ... 102
9.8 CAN PROGRAM NUMBER REQUEST BY SMS ... 104
9.9 GET LV-CAN INFO BY SMS ... 104
9.10 REFERENCES ... 104

**10 MOUNTING RECOMMENDATIONS ... 105**

10.1 CONNECTING WIRES ... 105
10.2 CONNECTING POWER SOURCE ... 105
10.3 CONNECTING IGNITION WIRE ... 105
10.4 CONNECTING GROUND WIRE ... 105
10.5 MODULE INSTALLATION ... 106

**CHANGE LOG ... 107**

# 1 INTRODUCTION

## 1.1 Attention

Do not disassemble the device. If the device is damaged, the power supply cables are not isolated or the isolation is damaged, before unplugging the power supply, do not touch the device.

All wireless data transferring devices produce interference that may affect other devices which are placed nearby.

The device must be connected only by qualified personnel.

The device must be firmly fastened in the predefined location.

The programming must be performed using a second class PC (with autonomic power supply).

The device is susceptible to water and humidity.

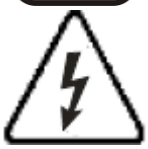

Any installation and/or handling during a lightning storm are prohibited.

FM3602/FM3612 has USB interface;
Please use cables provided with FM3602/FM3612 device.
Teltonika is not responsible for any harm caused by using wrong cables for PC <-> FM3602/FM3612 connection.

## 1.2 Instructions of safety

This chapter contains information on how to operate FM3602/FM3612 safely. By following these requirements and recommendations, you will avoid dangerous situations. You must read these instructions carefully and follow them strictly before operating the device!

This device uses SELV limited power source. The device could be supplied with 10 V...30 V DC power supply. The nominal voltage is 12 V DC. The allowed range of voltage is 10 V...30 V DC.

To avoid mechanical damage, it is advised to transport the FM3602/FM3612 device in an impact-proof package. Before usage, the device should be placed so that its LED indicators are visible, which show the status of operation the device is in.

When connecting the connection (2x6) cables to the vehicle, the appropriate jumpers of the power supply of the vehicle should be disconnected.

Before dismounting the device from the vehicle, the 2x6 connection must be disconnected.

The device is designed to be mounted in a zone of limited access, which is inaccessible for the operator. All related devices must meet the requirements of standard EN 60950-1.

The device FM3602/FM3612 is not designed as a navigational device for boats.

### 1.3 Legal Notice

Copyright © 2017 Teltonika. All rights reserved. Reproduction, transfer, distribution or storage of part or all of the contents in this document in any form without the prior written permission of Teltonika is prohibited.

Other products and company names mentioned here may be trademarks or trade names of their respective owners.

The manufacturer reserves the right to make changes and/or improvements at any time in design, functionality, parameters and electrical characteristics without any prior notice and without incurring obligations.

### 1.4 About document

This document contains information about the architecture, possibilities, mechanical characteristics, and configuration of the FM3602/FM3612 device.

Acronyms and terms used in document

PC – Personal Computer.

GPRS – General Packet Radio Service

GNSS – Global Positioning System

GSM – Global System for Mobile Communications

SMS – Short Message Service

AC/DC – Alternating Current/Direct Current

I/O – Input/Output

Record – AVL data stored in FM3602/FM3612 memory. AVL data contains GNSS and I/O information

AVL packet – data packet that has been sent to server during data transmission. AVL packet contains from 1 to 50 records.

# 2 BASIC DESCRIPTION

FM3602/FM3612 is a terminal with GPS/GLONASS and GSM/3G connectivity with backup battery, which is able to collect device coordinates and other useful data and transfer them via the GSM/3G network. This device is perfectly suitable for applications where location acquirement of remote objects is needed. It is important to mention that FM3602/FM3612 has additional inputs and outputs, which let you control and monitor other devices on remote objects. FM3602/FM3612 also has a USB port for device status log output and configuration.

## 2.1 Package contents[1]

The FM3602/FM3612 device is supplied to the customer in a cardboard box containing all the equipment that is necessary for operation. The package contains:

FM3602/FM3612 device;
Input and output power supply cable with a 2x6 connection pins;
USB cable;
Li-Po battery 3.7, 170mAh

## 2.2 Basic characteristics

**FM3602 Interface features:**

- Power supply: 10 ÷ 30V;
- 2 digital inputs;
- 2 analog/digital input;
- 2 open collector Digital output;
- 1 Wire interface:
  - Temperature sensor
  - iButton
- Internal backup battery;
- 2 Status LEDs:
  - Navigate
  - Status
- Internal USB port;
- External GSM/GPRS/3G antenna;
- External GNSS antenna;
- Interface for LVCAN;

**FM3612 Interface features:**

- Power supply: 10 ÷ 30V;
- 2 digital inputs;
- 2 analog/digital input;
- 2 open collector Digital output;
- 1 Wire interface:
  - Temperature sensor
  - iButton

[1] Package content depends on Order Code, and can be customized by customer needs.

- Internal backup battery;
- 2 Status LEDs:
  - Navigate
  - Status
- Internal USB port;
- Internal GSM/GPRS/3G antenna;
- Internal GNSS antenna;
- Interface for LVCAN;

Hardware features:

- Cortex®-M3 processor;
- 8 Mbit internal Flash memory;
- Built-in accelerometer sensor.

GSM / GPRS / 3G features:

- UMTS/HSPA+, GSM/GPRS/EDGE module
- GSM/GPRS/EDGE bands depending on module:
  - UC20-G 850/900/1800/1900MHz
- UMTS/HSPA+ bands depending on module:
  - UC20-G 800/850/900/1900/2100 MHz
- HSUPA rate up to 5.76 Mbps, HSDPA rates up to 14,4 Mbps
- UMTS Uplink/Downlink up to 384 kbps
- EDGE Uplink/Downlink up to 236.8 kbps
- GPRS and EDGE class 12;
- SMS (text, data).

GNSS features:

- TG1000 engine for GNSS, GLONASS, Galileo and QZSS;
- 33channel GPS/GLONASS receiver;
- Protocol NMEA-0183: GGA, GGL, GSA, GSV, RMC, VTG;
- -165 dBm Tracking Sensitivity

Special features:

- Any element event triggers (external sensor, input, speed, temperature, etc.);
- Highly configurable data acquisition and sending;
- Multiple Geo-fence areas;
- Sleep mode;
- Deep sleep mode;
- Configurable scenarios available;
- Real-time process monitoring;
- Authorized number list for remote access;
- Firmware update over GPRS or USB port;
- Configuration update over GPRS, SMS or USB port;
- TCP/IP or UDP/IP protocol support;
- Up to 3854 records storing;

- Radio frequency jamming detection.
- Records exporting using USB;
- Offline working mode;

Overvoltage protection

| Description | Voltage | Duration |
|---|---|---|
| Normal operation | 10-30V | Unlimited |
| Protection turns on, device turns off. | 34V | Unlimited |
| Maximum voltage | <70V | Unlimited |
| Maximum voltage impulse | 90V | 5 milliseconds |

### 2.3 Technical feature

| Part name | Physical specification |
|---|---|
| System LED | LED |
| Navigation LED | LED |
| Socket 2x6 | Tyco Micro MATE-N-LOK™ 4-794628-0 or similar |
| USB | Micro USB socket |

| Technical details |
|---|
| Power supply 10...30 V DC<br>2W Max<br>Energy consumption:<br>GPRS: ⎓ 150 mA r.m.s Max.,<br>Nominal: ⎓ average 50 mA r.m.s,<br>GNSS Sleep[2]: ⎓ average 18 mA<br>Deep Sleep: ⎓ average less than 5 mA[3]<br>Battery charge current: ⎓ 100 mA<br>Rated input current: ⎓ 250 mA Max.<br>Operation temperature:<br>-25°C ... +55°C<br>Storage temperature:<br>-40°C ... +70°C<br>Storage relative humidity 5 ... 95 % (no condensation)<br>Internal fuse: 3A, 125V |

**Table 1. FM3602/FM3612 specifications**

[2] When in Sleep mode, FM unit turns OFF GNSS module.
[3] When in Deep Sleep mode no data storing and sending is activated.

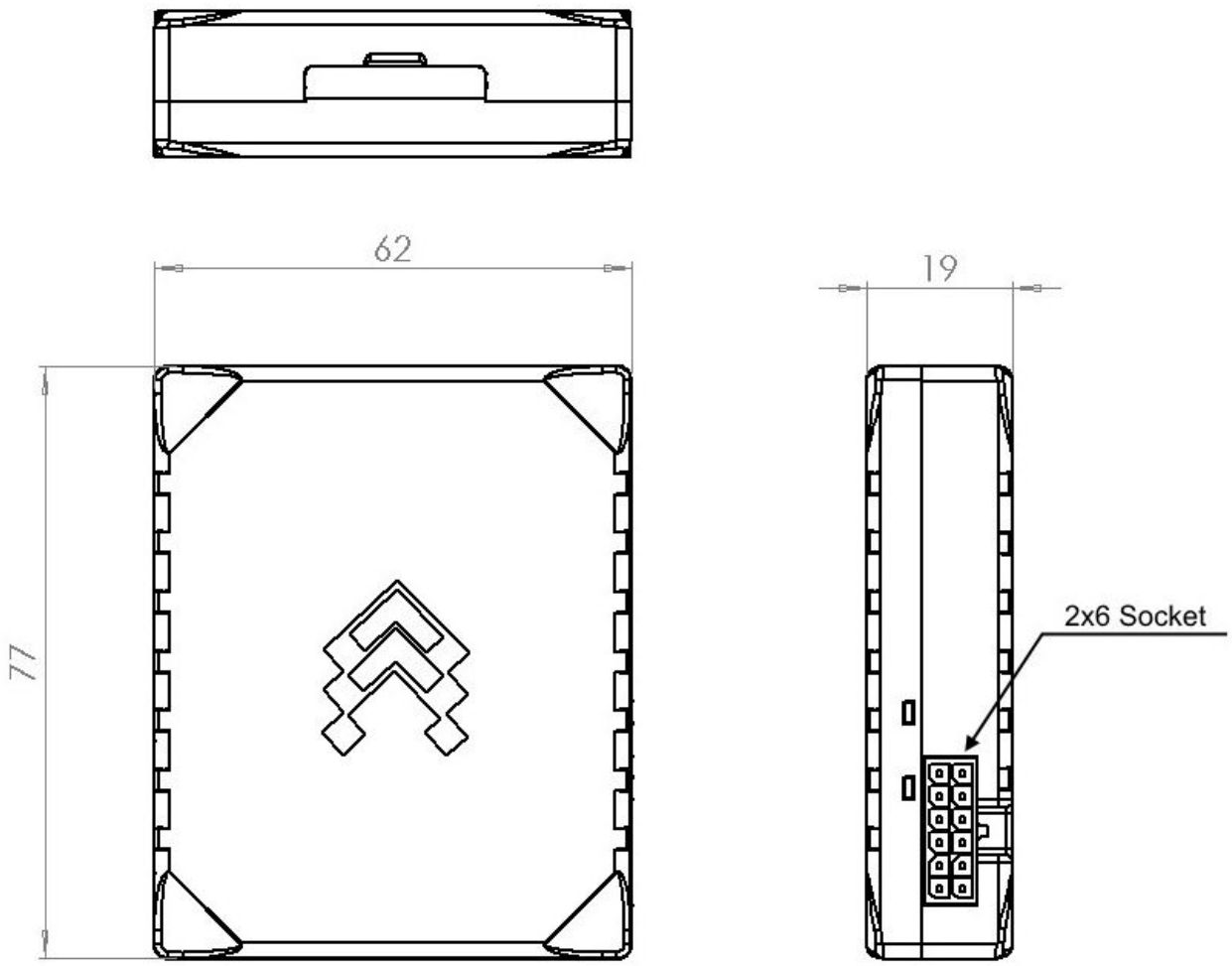


**Figure 1. FM3602/FM3612 view & dimensions (tolerance ±2mm)**

### 2.4 Electrical characteristics

| VALUE / CHARACTERISTIC DESCRIPTION | Min. | Typ. | Max. | Unit |
|---|---|---|---|---|
| | | | | |
| **Supply Voltage:** | | | | |
| Supply Voltage (Recommended Operating Conditions) | 10 | | 30 | V |
| Digital Output (Open Drain grade): | | | | |
| Drain current (Digital Output OFF) | | | 120 | µA |
| Drain current (Digital Output ON, Recommended Operating Conditions) | | | 1.0 | A |
| Static Drain-Source resistance (Digital Output ON) | | | 300 | mΩ |
| **Digital Input:** | | | | |
| Input resistance (DIN1,) | 15 | | | kΩ |
| Input resistance (DIN2, DIN3) | 20 | | | kΩ |

| | | | | |
|---|---|---|---|---|
| Input resistance (DIN4) | 120 | | | kΩ |
| Input Voltage (Recommended Operating Conditions) | 0 | | Supply voltage | V |
| Input Voltage threshold (DIN1) | | 7.5 | | V |
| Input Voltage threshold (DIN2) | | 2.5 | | V |
| Input Voltage threshold (DIN3) | | 2.5 | | V |
| Input Voltage threshold (DIN4) | | 2.5 | | V |
| **Analog Input:** | | | | |
| Input Voltage (Recommended Operating Conditions), Range1 | 0 | | 10 | V |
| Input resistance, Range1 | | 120 | | kΩ |
| Measurement error | | 0.47 | | % |
| Additional error | | ±17.3 | | mV |
| Input Voltage (Recommended Operating Conditions) Range2 | 0 | | 30 | V |
| Input resistance, Range2 | | 150 | | kΩ |
| Measurement error | | 1.01 | | % |
| Additional error | | ±139 | 0 | mV |

| Output Supply Voltage 1-Wire: | | | | |
|---|---|---|---|---|
| Supply Voltage | 3.3 | | 3.6 | V |
| Output inner resistance | | 7 | | Ω |
| Output current ($U_{out}$ > 3.0V) | | 30 | | mA |
| Short circuit current ($U_{out}$ = 0) | | 130 | | mA |

### 2.5 Absolute Maximum Ratings

| VALUE / CHARACTERISTIC DESCRIPTION | Min. | Typ. | Max. | Unit |
|---|---|---|---|---|
| Supply Voltage (Absolute Maximum Ratings) | -32 | | 32 | V |
| Drain-Source clamp threshold voltage (Absolute Maximum Ratings), ($I_{drain}$ = 2mA) | | | 36 | V |
| Digital Input Voltage (Absolute Maximum Ratings) | -32 | | 32 | V |
| Analog Input Voltage (Absolute Maximum Ratings) | -32 | | 32 | V |

### 2.6 Technical Information about internal battery

FM3602/FM3612 internal battery is used for detecting external voltage disconnection.

CAUTION: RISK OF EXPLOSION IF BATTERY IS REPLACED BY AN INCORRECT TYPE. DISPOSE OF USED BATTERIES ACCORDING TO THE INSTRUCTIONS.

Battery Disposal instructions:

Battery should not be disposed of with general household waste.
Bring damaged or worn-out batteries to your local recycling center or dispose them to battery recycle bin found in stores.

| Internal back-up battery | Battery voltage V | Nominal capacity (mAh) | Power(Wh) | Charging temperature range (◦C) |
|---|---|---|---|---|
| Li-Polymer rechargeable battery | 3,7 | 170 | 0.64 – 0.66 | 0 – 45 |

# 3 CONNECTION, PINOUT, ACCESSORIES

## 3.1 How to insert SIM card and attach battery into FM3602/FM3612 device:

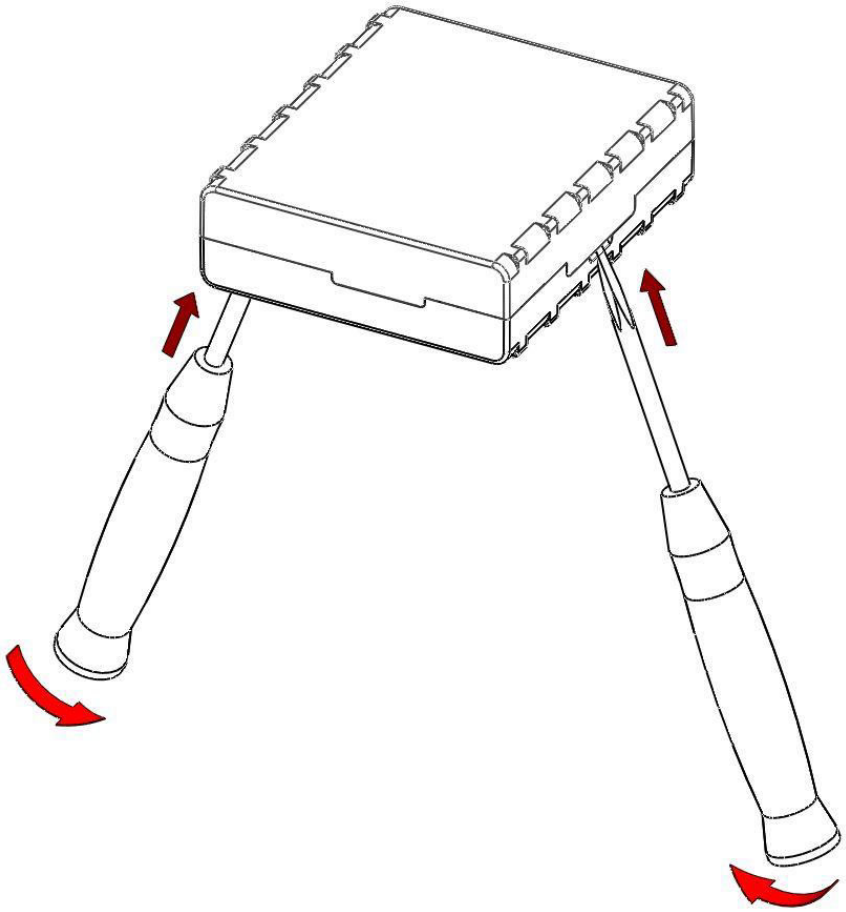

①

Gently open FM3602/FM3612 case using screwdrivers

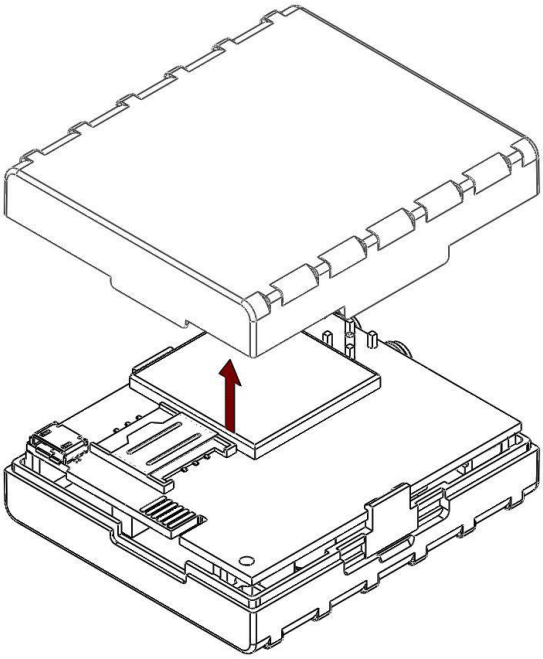

②

Remove FM3602/FM3612 case

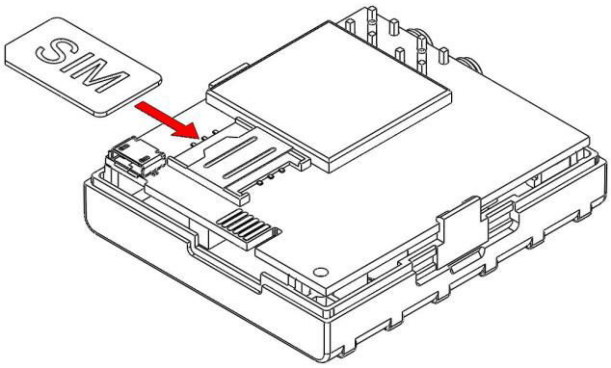


③

Insert SIM card as shown

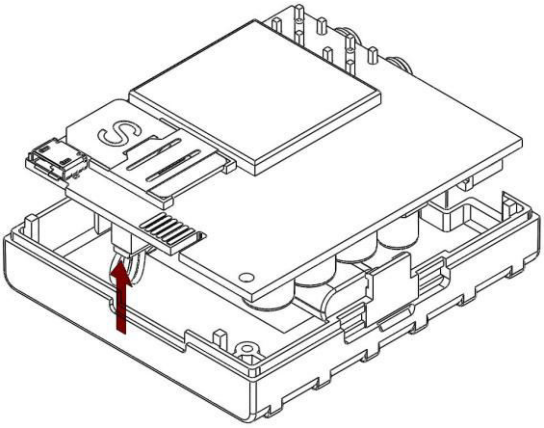


④

Attach battery

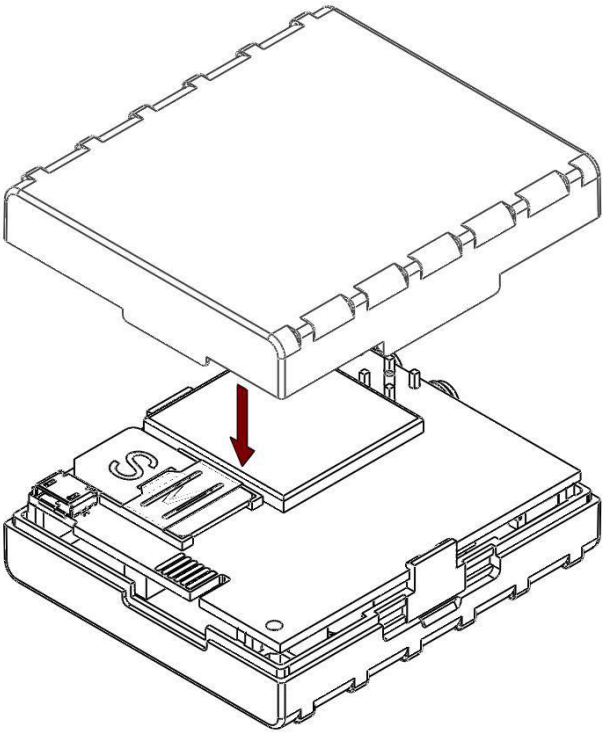


⑤

Attach top housing cover

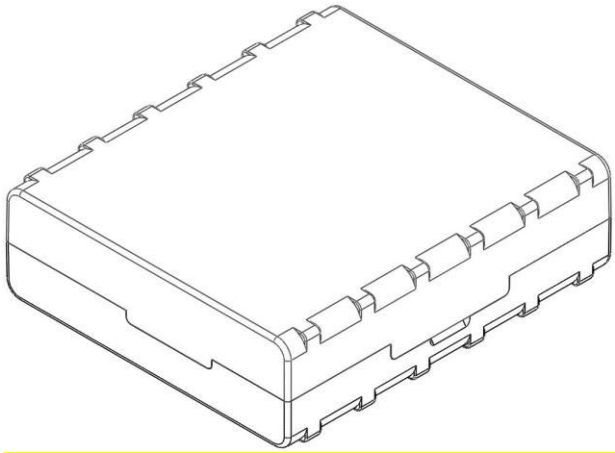

⑥

Device is ready

### 3.2 Installing FM3602/FM3612 drivers

**Software requirements:**

- Operating system 32-bit and 64-bit: Windows XP with SP3 or later, Windows Vista, Windows 7/8/8.1/10.
- MS .NET Framework V3.5 or later (http://www.microsoft.com).

**Drivers:**

Please download Virtual COM Port drivers from Teltonika website:
http://avl1.teltonika.lt/downloads/FM36/vcpdriver_v1.3.1_setup.zip

**Installing drivers:**

Extract and run VCPDriver_V1.3.1_Setup.exe. This driver is used to detect FM3602/FM3612 device connected to the computer. Click 'Next' in driver installation window (figures below):

**Figure 2. Driver installation window**

This will launch device driver installation wizard. In the following window click 'Next' button again:

**Figure 3. Driver installation window**

Setup will continue installing drivers and will display a window about successful process at the end. Click 'Finish' to complete setup:

**Figure 4. Driver installation window**

You have now installed drivers for FM3602/FM3612 device successfully.

### 3.3 Navigate LED

| Behavior | Meaning |
|---|---|
| Permanently switched on | GNSS signal is not received |
| Blinking every second | Normal mode, GNSS is working |
| Off | GNSS is turned off because:<br>• Sleep mode<br>• Deep sleep mode<br>Or<br>• GNSS antenna short circuited |

### 3.4 Status LED

| Behavior | Meaning |
|---|---|
| Blinking every second | Normal mode |
| Blinking every 2 seconds | Deep sleep mode |
| Blinking fast for a short time | Modem activity |
| Blinking fast constantly | Boot mode |
| Off | • Device is not working<br>Or<br>• Device firmware being flashed |

### 3.5 FM3602/FM3612 Socket 2×6*

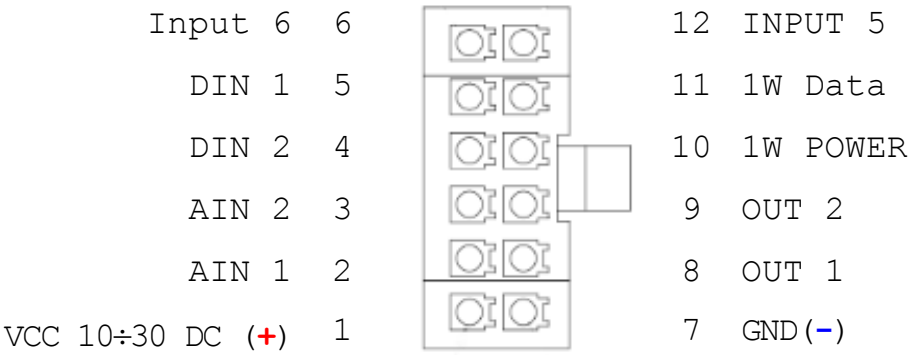


**Figure 5. 2×6 socket pinout**

**Figure 6. FM3602/FM3612 sticker**

| Pin Nr. | Pin Name | Description |
|---|---|---|
| 1 | VCC (10÷30) V DC (+) | Power supply for module. Power supply range (10÷30)V DC<br>Energy consumption: GPRS: ⎓ 150 mA r.m.s Max. |
| 2 | DIN 4 / AIN 1 | Digital input, channel / Analog input 0-30 V range |
| 3 | DIN 3 / AIN 2 | Digital input, channel / Analog input 0-30 V range |
| 4 | DIN 2 | Digital input, channel 2 |
| 5 | DIN 1 | Digital input, channel 1 |
| 6 | INPUT 6 | LV-CAN/ALL-CAN interface input 6 line |
| 7 | GND (-) | Ground pin. |
| 8 | OUT 1 | Digital output. Channel 1. Open collector output. Max. ⎓ 150mA. |
| 9 | OUT 2 | Digital output. Channel 1. Open collector output. Max. ⎓ 150mA. |

| | | |
|---|---|---|
| 10 | 1WIRE POWER | Power supply pin for Dallas 1-Wire® devices |
| 11 | 1WIRE DATA | Data channel for Dallas 1-Wire® devices |
| 12 | INPUT 5 | LV-CAN/ALL-CAN interface input 5 line |

**Table 2. Socket 2x6 pinout description.**

### 3.6 USB

**Micro USB connector**

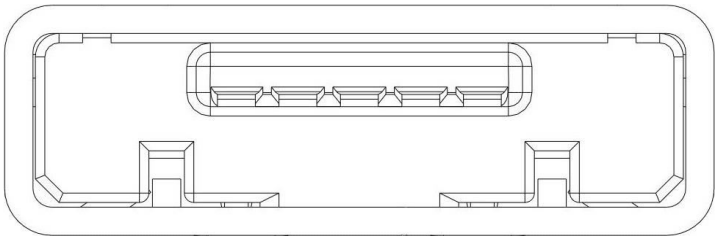

**Figure 7. Micro USB type B connector**

FM3602/FM3612 connected to PC creates an STM Virtual COM Port, which can be used as a system port (to flash firmware and configure the device):

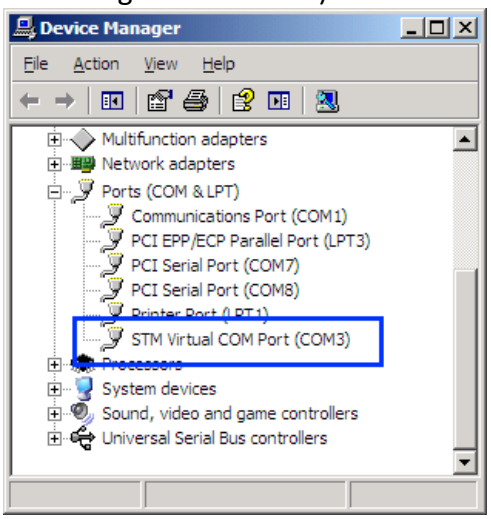


**Figure 8. COM-Ports**

### 3.7 Accessories

#### 1 – Wire devices for FM36X2

One of the realized features is 1-Wire® data protocol, which enables connection of thermometer (DS1820, DS18S20 and DS18B20) and I-Button type: DS1990A (Figures 9 and 10 show FM3602/FM3612 and 1-wire® device connection schemes).

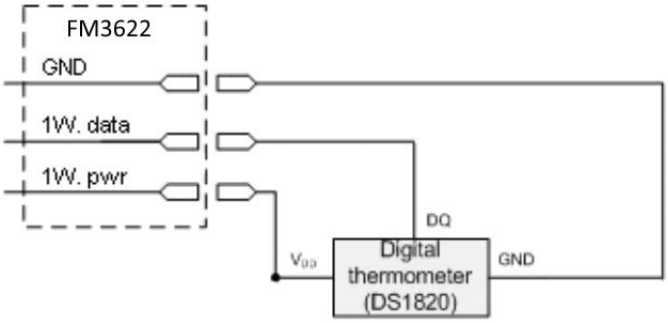


**Left row of pins**

| | |
|---|---|
| 1W.PWR (FM3602/FM3612 – pin5) | 1 |
| 1W. Data (FM3602/FM3612 – pin4) | 2 |
| GND (FM3602/FM3612 – pin7) | 3 |
| Digital Input | 4 |

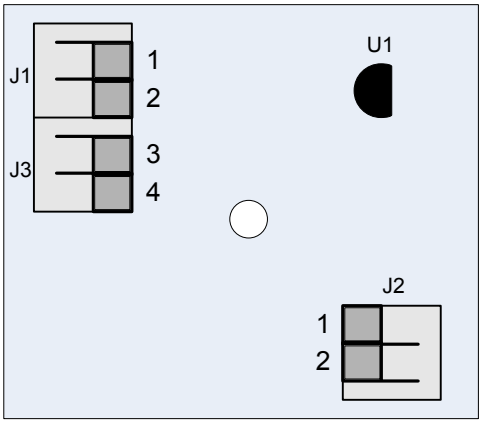


**Right row of pins**

| | |
|---|---|
| 1 | Vpp (+5 Volts DC) – power source for external digital sensor |
| 2 | Output from external digital sensor |

**Figure 9. Digital thermometer DS1820 and TTJ100 connection scheme**

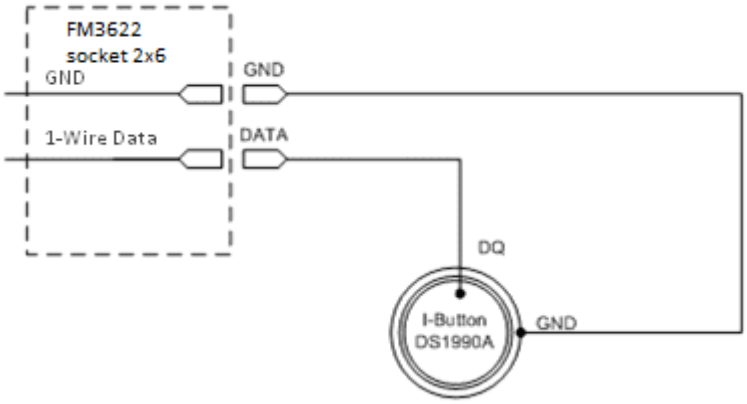


**Figure 10. I-Button DS1990A connection scheme**

**Note: Teltonika does not provide any additional equipment like panic buttons, door sensors or others.**

**Fuel Tank sensors for FM36X2**

A fuel tank level sensor exists in most cars, which shows the approximate fuel level in the driver's indicator panel. It is possible to connect Analog input to FM3602/FM3612 (if sensor returns analogue signal proportional to fuel level). Figure 10 shows the connection scheme to the FM3602/FM3612 and fuel tank sensor through Analog input 1. After the connection to the tank fuel level sensor, calibration is needed. Calibration is needed because most fuel tank sensors are not linear. Calibration is performed by measuring voltage dependence on volume of fuel in tank.

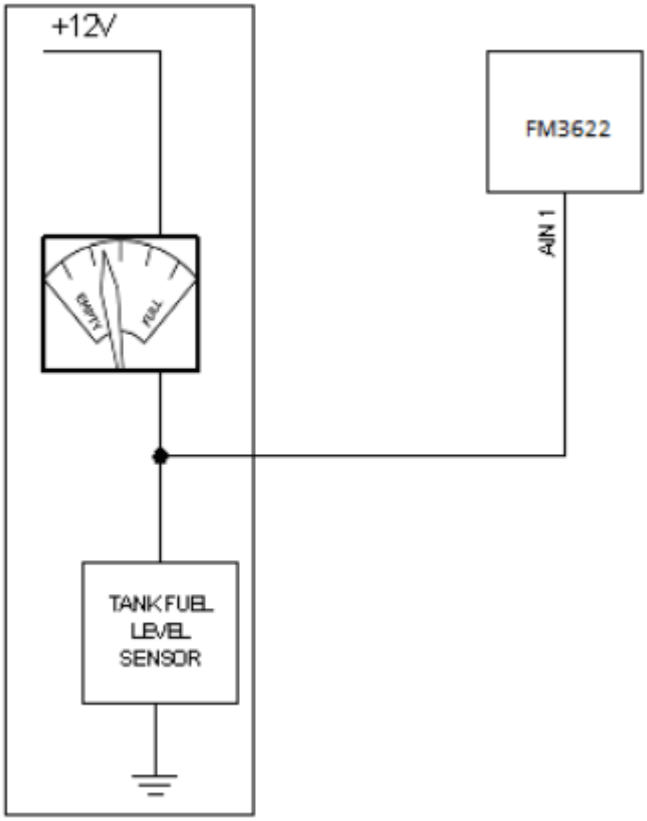


**Figure 11. Fuel Tank sensor connection**

**Alarm buttons, door sensors, etc.**

Alarm buttons, door sensors, ignition, etc. return two states: high or low voltage. Digital inputs are used to read this information. Figure below shows how to connect alarm button, door sensor, etc.

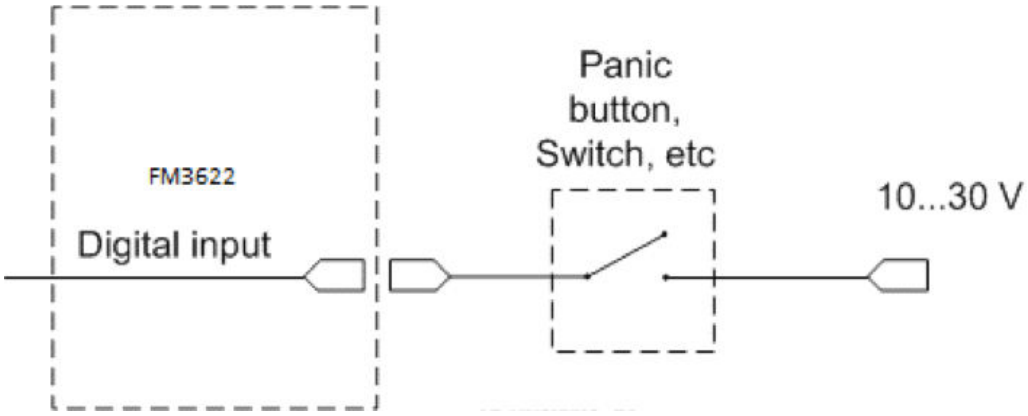


**Figure 12. Panic button connection**

In cases when sensor output signal is negative, an additional relay has to be installed to convert negative signal to positive.

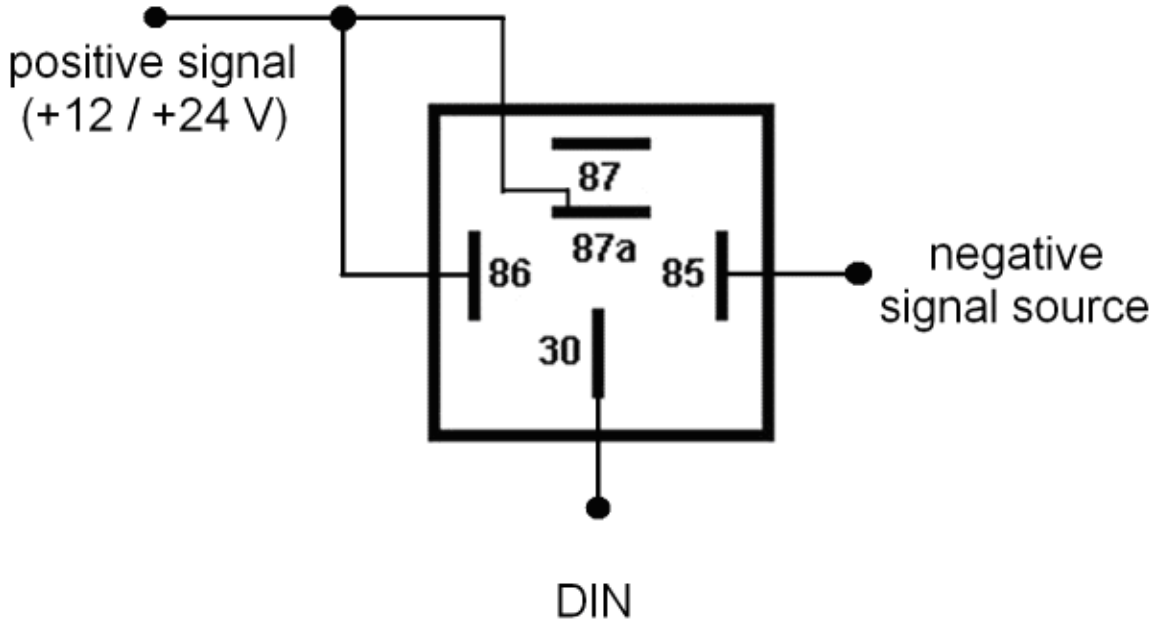


**Figure 13. Inverting relay connection**

**Immobilizer relay**

When connected as shown below, FM3602/FM3612 disables engine starter when output is OFF. More details about relays can be found below.

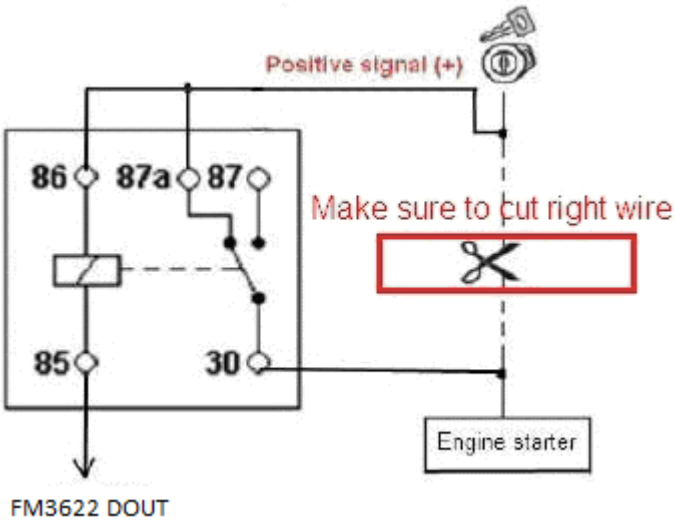


**Figure 14. Immobilizer relay connection**

**Relays**

An ordinary automotive relay is used to invert input signal or to immobilize engine starter. Note, that they are available as 12 V or 24 V.

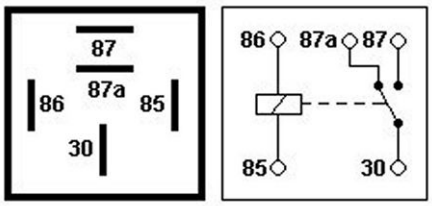


**Figure 15. Automotive relay pinout**

# 4 FIRMWARE

FM3602/FM3612 functionality is always improving, new firmware versions are developed.
Current module firmware version can be retrieved from Configurator.

Connect FM3602/FM3612 to PC with the USB cable. Launch “Firmware Updater”, select COM port to which device is connected, click connect, and when IMEI and Firmware version fields are filled, start the update. Device needs some time to send IMEI and Firmware version, so do not be afraid if IMEI will not show up immediately, disconnect and after 1-2 minutes try to connect again. When starting update device will open link with updater. With link open device downloads firmware and starts installing. Wait thru all these screens as in **Figure 17** for firmware to update. Update process may take up to several minutes.

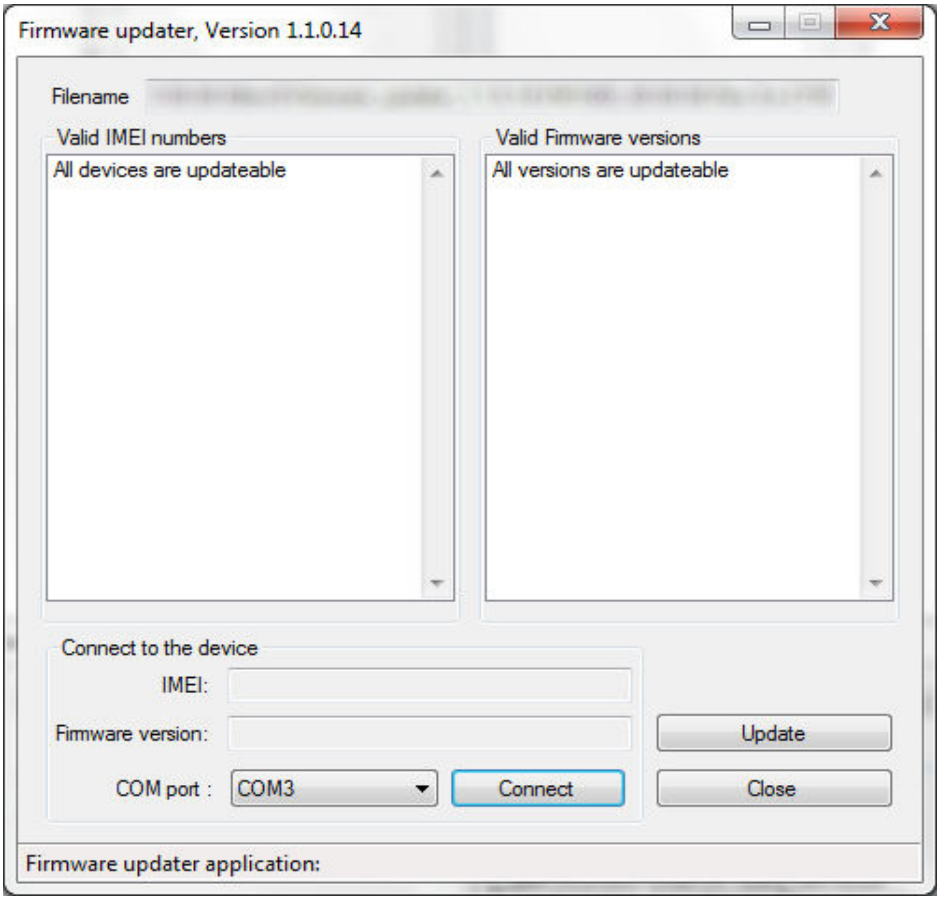


**Figure 16. FM3602/FM3612 firmware updater screen**

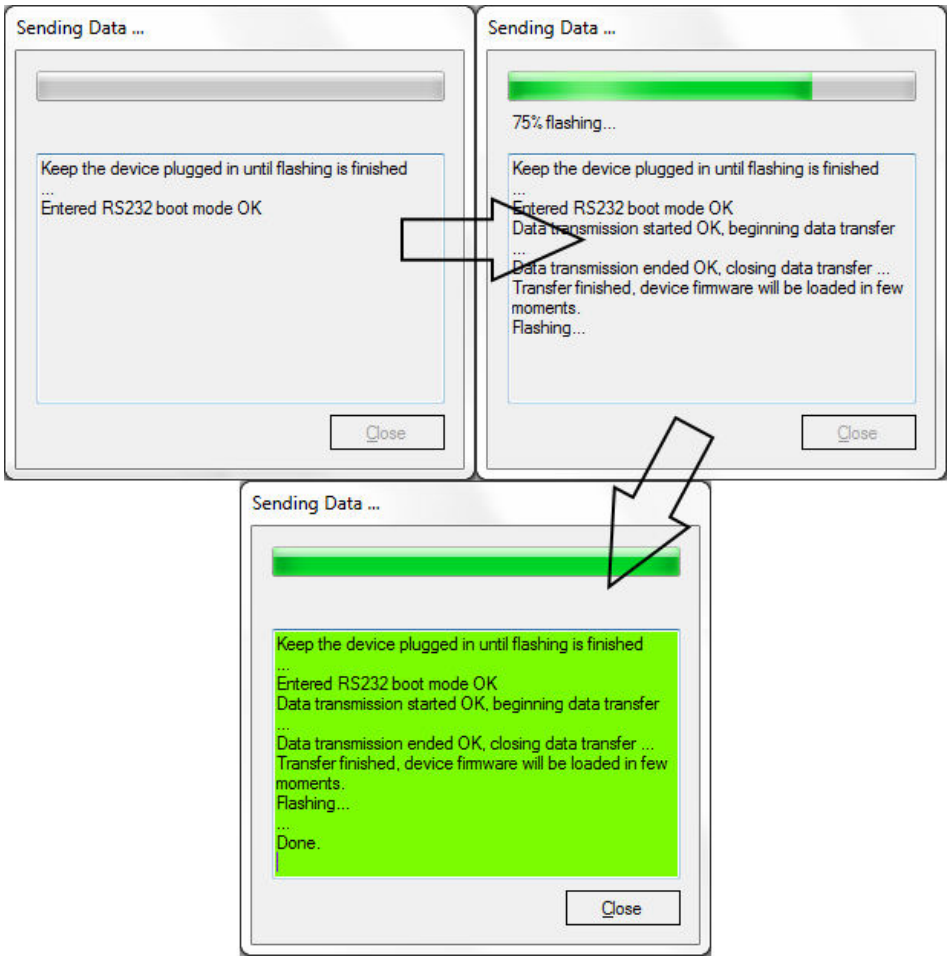


**Figure 17. Firmware updating processes**

When you see a green table like in **Figure 17**, it means that the firmware is flashed to FM3602/FM3612 successfully. You may now close the update window and start using your FM3602/FM3612 device.

# 5 OPERATIONAL BASICS

## 5.1 Operational principals

FM3602/FM3612 module is designed to acquire records and send them to server. Records contain GNSS data and I/O information. Module uses GNSS receiver to acquire GNSS data and is powered with four data acquire methods: time-based, distance-based, angle-based and speed-based method. Note, that if FM3602/FM3612 loses connection to GNSS satellites, it continues to make records, however coordinate in these records remains the same (last known coordinate). Method's details are described in section 5.13. All data is stored in flash memory and later can be sent via 3G, GPRS or SMS. 3G mode is the most preferred data sending mode. If 3G coverage is not available the device sends data through GPRS network. FM3602/FM3612 can also be configured to send data over GPRS and SMS only. This mode can be used to save bills or in the areas where 3G is not available. The least preferred data sending mode is SMS, which is mostly used in areas without GPRS coverage or GPRS usage is too expensive.

3G, GPRS and SMS settings are described in further sections. FM3602/FM3612 communicates with server using special data protocol. Data protocol is described in “FMXXXX Protocols” document.

FM3602/FM3612 can be managed by SMS commands. SMS Command list is described in SMS COMMAND LIST section. Module configuration can be performed over TCP or via SMS. Configuration parameters and modes are described in “FMXXXX Protocols” document.

## 5.2 Sleep modes

### 5.2.1 Sleep mode

FM3602/FM3612 is able to go to Sleep mode after configured interval of time. While in sleep mode, FM3602/FM3612 sets GNSS receiver to sleep mode and it isn’t making periodic records (only event records is being recorded with last known coordinate and sent to AVL server). As a result power usage decreases allowing saving vehicle battery.

FM3602/FM3612 can enter sleep mode if **ALL** of these conditions are met:

- FM3602/FM3612 has to be configured to work in Sleep mode and Sleep timeout set;
- Device must be synchronized time with GNSS satellites or via NTP;
- No movement by motion sensor is detected;
- Ignition (DIN1) is off;

FM3602/FM3612 exits sleep mode when if **ONE** of following conditions are true:

- Movement by motion sensor is detected;
- Ignition (DIN1) is turned on;

### 5.2.2 Deep Sleep mode

While in deep sleep mode, FM3602/FM3612 sets GNSS receiver to sleep mode and turns off GSM/GPRS/3G module (it is not possible to wake up device via SMS). Despite records with last known coordinate are being saved and send to AVL server (GSM/GPRS/3G module is turned on to send data and after that it is turned off again), power usage is decreased to save vehicle’s battery. Note, that power saving depends on two configurable parameters: send period and min. record saving period.

FM3602/FM3612 can enter deep sleep mode if **ALL** of these conditions are met:

- FM3602/FM3612 has to be configured to work in Deep Sleep mode and Sleep timeout set;
- Device must be synchronized time with GNSS satellites or via NTP;
- No movement by motion sensor is detected;
- Ignition (DIN1) is off;
- Min. Record Saving Period (Data Acquisition Mode settings) must be bigger than Active Data Link Timeout parameter, that FM3602/FM3612 could close GPRS/3G link.

- Difference between send period (Data Acquisition Mode settings) and Active Data Link Timeout must be more than 90 sec., that FM3602/FM3612 could close GPRS/3G link for at least 90 sec.
- USB cable is not connected.

FM3602/FM3612 exits deep sleep mode when if **ONE** of following conditions are true:

- Movement by motion sensor is detected;
- Ignition (DIN1) is turned on;
- USB cable is connected;

**Note: In order to save 3G/GPRS traffic records saved in deep sleep mode do not contain below listed I/O elements information:**
**PDOP, HDOP, Odometer, Speedometer, iButton ID, Cell ID, Area Code, Temperature and GNSS power**

### 5.3 Virtual odometer

Virtual odometer is used to calculate traveled distance in FM3602/FM3612 as a separate I/O element. When FM3602/FM3612 detects movement, it starts counting distance using GNSS signal: every second it checks current location and calculates distance between current and previous point. It keeps adding these intervals until it is time to make a record, then FM3602/FM3612 records its location and adds odometer value, which is equal to the sum of all distances, measured every second. When record is made, odometer resets to zero and distance calculation starts all over again.

Virtual odometer as an I/O element can be also used with Trip feature, read chapters 5.4.2 and 5.14.2 for more details.

### 5.4 Features

Using available features can greatly increase FM3602/FM3612 usability options.

#### 5.4.1 Scenarios

**Green Driving Scenario.** Helps to prevent and inspect driver about harsh driving. Scenario continuously monitors: accelerating force, braking force and cornering angles. Warns driver if needed. DOUT1 or DOUT2 is controlled by scenario for user needs, for example buzzer or LED.

To save 3G/GPRS traffic Green Driving **event** will be **generated (included into sent records) only** when measured values are higher than those set in configuration, without additional I/O settings.

To prevent generating false events, harsh acceleration and harsh braking is monitored only when following conditions are fulfilled:

- Ignition is ON (DIN1 = 1)
- Vehicle speed is equal or higher than 10km/h

Harsh cornering is monitored only when following conditions are fulfilled:

- Ignition is ON (DIN1 = 1)

- Vehicle speed is equal or higher than 30km/h

**Note: Green Driving Scenario is a factor on various cars and various drivers testing phase and can be subject to changes. Teltonika is constantly working on improvement of the functionality of the devices, and strongly recommends using the latest version of the firmware.**

**Over Speeding Scenario**. Helps to prevent from exceeding fixed speed and inspects driver if needed. DOUT1 or DOUT2 is controlled by scenario for user needs, to manage buzzer, LED, etc.

**Authorized Driving Scenario.** Gives ability to use vehicle for 500 specific iButton owners (specified in iButton list). DOUT2 or DOUT1 is controlled by scenario for user needs, to manage buzzer, LED, etc.

**Note: In order for Authorized driving to work properly, at least 1 iButton ID must be written to the iButton list.**

**Immobilizer Scenario.** Vehicle can be used only if iButton is connected. In this scenario iButton list is not used; connect any iButton to pass Immobilizer security. DOUT2 or DOUT1 is controlled by scenario for user needs, to manage buzzer, LED, etc.

**Excessive Idling Detection.** Scenario informs you if your vehicle is stationary but engine is on for selected period of time to help you to save fuel.

**Jamming scenario**. Radio jamming is the (usually deliberate) transmission of radio signals that disrupt communications by decreasing the signal to noise ratio. When jamming detection is enabled, FM3602/FM3612 informs (with buzzer or LED, connected to DOUT1) driver about jamming
event

#### 5.4.2 Trip

Trip customizable feature enables user extended monitoring of performed trips (from engine start at present location to engine stop at arrived location), log their start and stop points, view driven total distance. Event will be **generated (included into send records) only** when trip starts and finishes. This feature is available on all FM3602/FM3612 hardware versions without limitations.

**Note: Scenarios and Trip features are activated (DOUTs are activated) only if DIN1 = 1 (ignition is on).**

### 5.4.3 Geofencing

Geofencing is another feature which is highly customizable and can detect wherever car enters or leaves customized areas. More about Geofencing can be read in 5.14.3 chapter.

Auto Geofencing feature if enabled is activated automatically by turning off car ignition. Next time before driving user has to disable Auto Geofencing with iButton or by turning on car ignition. In case of theft car leaves Auto Geofencing zone without authorization high priority record to AVL application is sent automatically.

### 5.4.4 iButton list

iButton list is used to enter authorized iButton ID codes, which are used to authenticate driver in Authorized driving and Auto Geofencing options.

## 5.5 CONFIGURATION

## 5.6 Configurator

New FM3602/FM3612 module has default factory settings. Settings should be changed according to your application and your GSM operator information.

FM3602/FM3612 configuration is performed via FM3602/FM3612 Configurator program. Contact sales manager to get the latest FM3602/FM3612 Configurator version. FM3602/FM3612 configurator operates on Microsoft Windows OS and uses MS .Net Framework 3.5 or higher. Please ensure that MS .Net Framework 3.5 or later is installed on your PC before starting configurator. Latest MS .Net Framework version can be downloaded from official Microsoft web page.

Module configuration is performed over USB cable. Configuration process starts from starting FM3602/FM3612 Configurator program and then connecting to FM3602/FM3612 device via Connect button located on the top left corner of configurator. If connected successfully IMEI, Version fields which were empty, now are filled with certain numbers depending on Modem IMEI and firmware version of your device (figure below).

FM3602/FM3612 has one user editable profile, which can be loaded from device, and saved. User can also revert to default settings, by pressing Load Defaults button. After any modification of configuration settings it has to be saved to FM3602/FM3612 device, otherwise it will not be written to device.

FM3602/FM3612 has 2 configuration modes: Recommended Configuration (Figure 18) and Advanced Configuration (Figure 19).

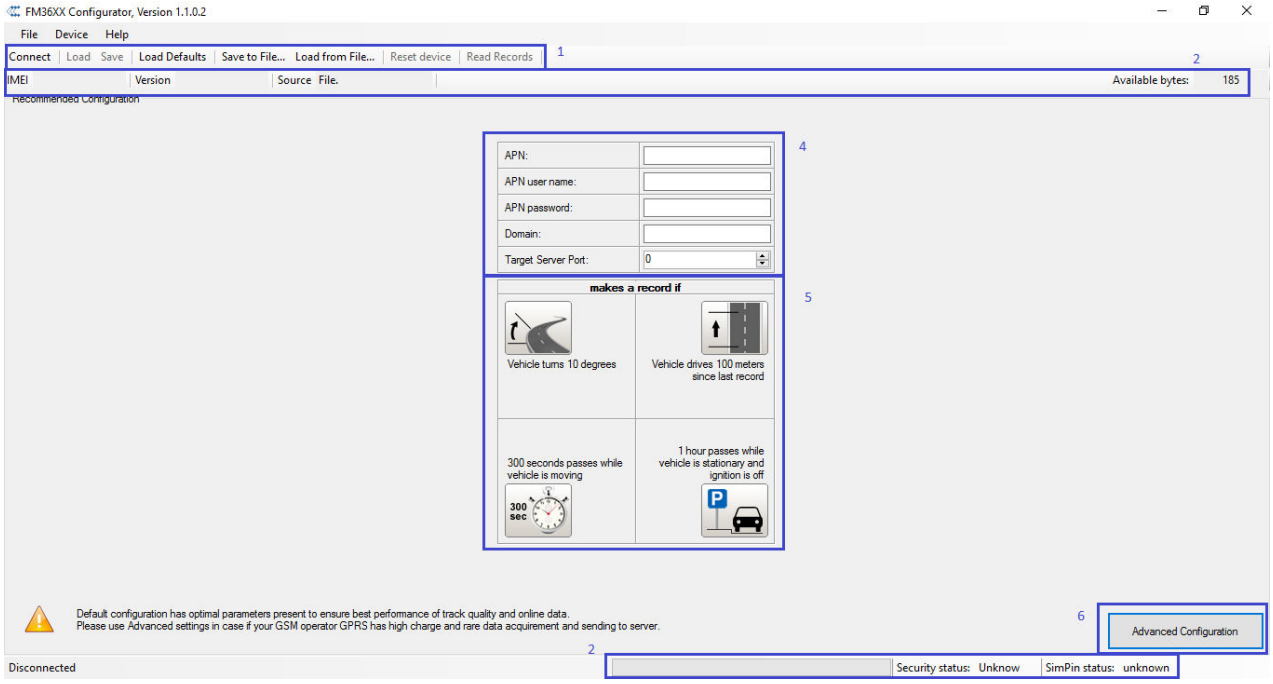


**Figure 18. Recommended Configuration window**

Recommended Configuration mode uses predefined data acquisition values. In this configuration mode it is only required to enter network parameters. In Advanced Configuration mode FM3602/FM3612 is more configurable.

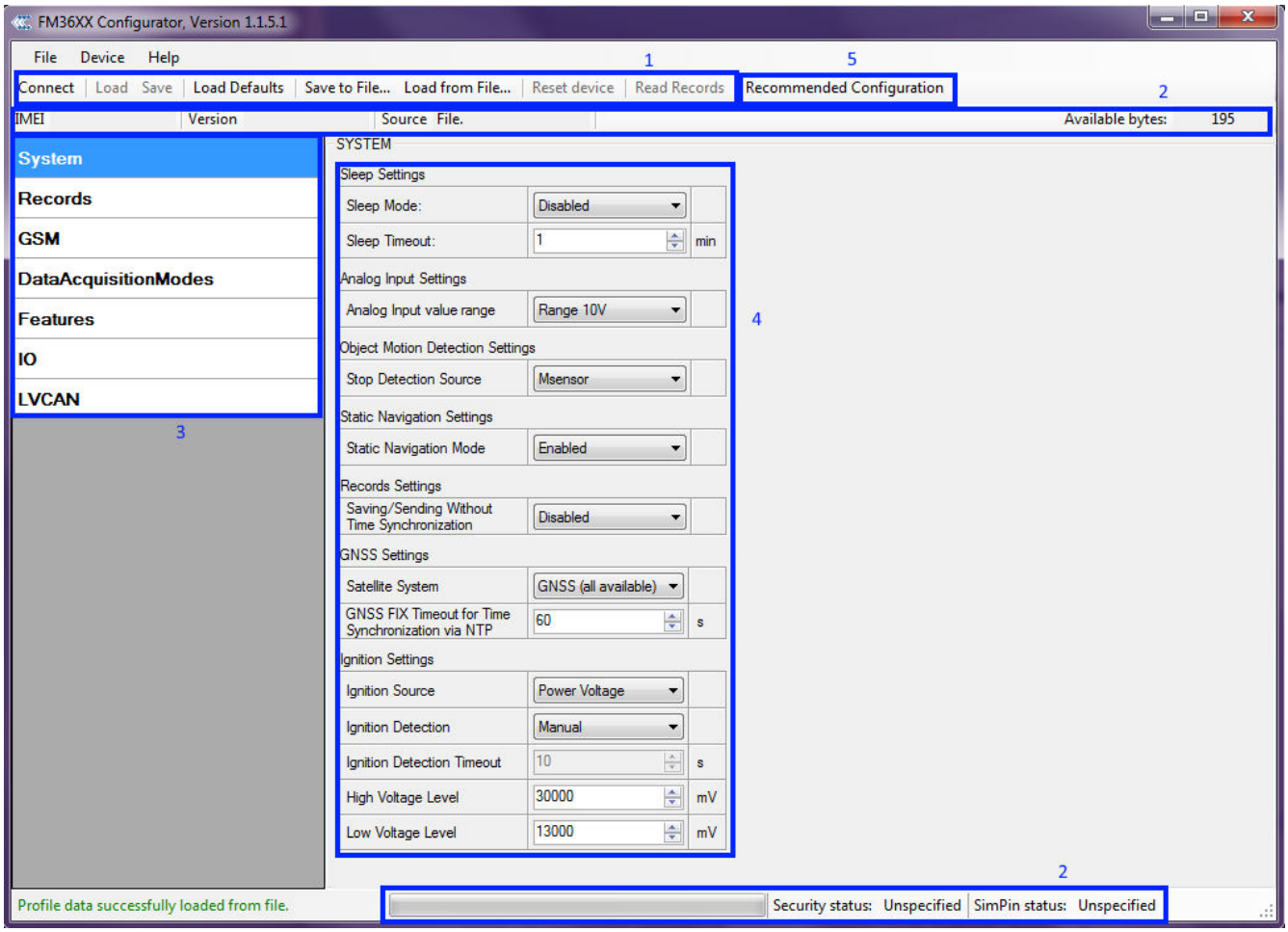


**Figure 19. Advanced Configuration window**

FM3602/FM3612 Configurator is divided into main areas: 1 – main button area, 2 – information area, 3 –settings menu, 4 – parameters and values menu, 5 – recommended configuration values.

Button 6 is used to change between configuration modes.

**Main Buttons description:**

'Connect' – connects device

'Load' – reads configuration parameters from FM3602/FM3612 Flash memory.

'Save' – saves configuration parameters to FM3602/FM3612 Flash memory.

'Load Defaults' – loads default FM3602/FM3612 settings that later can be modified. This procedure must be performed before entering new parameters.

'Save to File…' – allows user to save currently entered settings to .XML file, for later usage.

'Load from File…' – allows user to load configuration saved in .XML extension file.

'Reset device' – reboots FM3602/FM3612 and displays processor firmware version.

**Additional Buttons description:**

'Add Keyword' / 'Change Keyword' / 'Switch Security Off'– buttons are used to protect configurator from unauthorized access to configuration.

Keyword is 4 – 10 symbol length. If keyword is set, every time user reconnects FM3602/FM3612 to USB port, user will be asked to provide valid keyword when connecting FM3602/FM3612 to configurator. User is given 5 attempts to enter keyword. After entering valid keyword, counter resets to 5.

If user disconnects FM3602/FM3612 using 'Disconnect' button and does not disconnect from USB port, after reconnecting using 'Connect' button, configurator does not ask for keyword.

**ATTENTION! If you have entered a keyword, disconnected from the configurator and then later connected again, you will need to enter the keyword that you have entered previously. If you have forgotten it, please contact your local sales manager.**

### 5.7 Read records

When the FM3602/FM3612 is working in offline mode, it can save up to 3854 records. Since these records are not sent to the server, they can be downloaded directly to connected computer using USB connection. When you connect FM3602/FM3612 device, FM3602/FM3612 Configurator appears with additional option "Read Records" (Fig. 20).

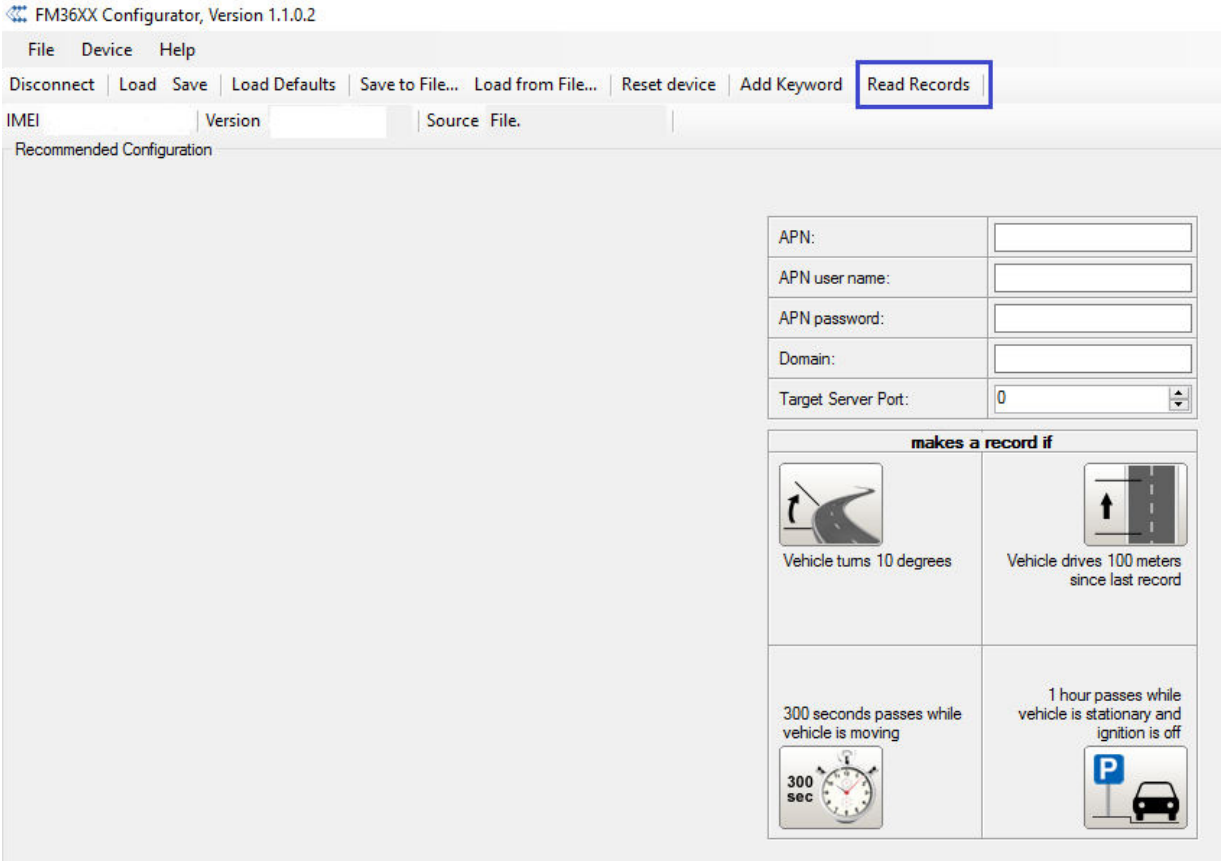


**Figure 20. FM36XX Configurator window with FM3602/FM3612 connected**

After device is switched on, you have to wait 3 minutes for device to startup. Only then it is possible to download records. If the memory is fully filled, the records reading may take several minutes. After reading records, all records are deleted from the device memory. Data records are

stored in a binary file on your PC. You can upload these records from file to TAVL server and access all the data from TAVL.

TAVL client application lets user to use the following features:

- Import data file saved from the device to the TAVL;
- Preview track of the imported data;
- Generate reports of the imported data.

More details on how to use TAVL application please refer to “TAVL4 application user manual” documentation or its later versions.

It can be configured to acquire and send data to server. It will be possible to store up to 3854 data records if GSM is not available at the moment. It will send data later when GPRS is available again. Note that FM3602/FM3612 can have memory full of records. In such a case it will start deleting oldest records in order to save new ones. Sending all the data records to server may take some time. Sending 3854 records for
FM3602/FM3612 may take for about 5 hour (exact time may differ depending on GPRS/server load).

### 5.8 System settings

System settings have 7 configurable parameters:

- Sleep settings, where user can turn GPS sleep/deep sleep on or off;
- Analog Input Settings, where user can choose analog input range 10 V or 30 V, depending on needed accuracy (lower range gives higher accuracy of measurements), and input voltage;
- Object Motion Detection Settings, where user can configure 3 ways how FM3602/FM3612 will detect stopped movement, and change its working mode (for working modes, read section 5.13)
- Static navigation settings, where user can turn static navigation on or off;
- Records Settings, where user can enable or disable records when GPS is not available (no time synchronization);
- GNSS Settings, where user can choose satellite system and GNSS FIX Timeout Time (if after timeout there will not be synchronized time, it will be synchronized via NTP server).
- Ignition Source sets ignition triggered functionalities to be triggered by:
    - Power Voltage (if voltage is between High Voltage Level and Low Voltage Level the ignition is considered to be turned on);
    - Digital Input (DIN1 ON – ignition on, DIN1 OFF – ignition off);
    - Movement (if accelerometer/movement sensor detects movement then ignition is on, if movement stops – ignition is off).

| Stop Detection Source | Vehicle on Stop mode | Vehicle Moving mode |
|---|---|---|
| Ignition (recommended) | If ignition (configured Ignition Source) is logic low | If ignition (configured Ignition Source) is logic high |
| Msensor (movement sensor) | Internal movement sensor does not detect movement | Internal movement sensor detects movement |
| GPS | GNSS fix is available and vehicle speed is lower than 5 km/h | GNSS fix is available and vehicle speed is higher than 5 km/h |
| | While GNSS fix is unavailable, Object Motion Detection Settings are working like in Msensor mode | |

Static Navigation Mode is a filter, which filters out track jumps when the object is stationary. If Static navigation filter is disabled, it will apply no changes on GNSS data. If Static navigation filter is enabled, it will filter changes in GNSS position if no movement is detected (depends on Object Motion Detection Settings). It allows filtering GNSS jumps when object is parked (is not moving) and GNSS position is still traced.

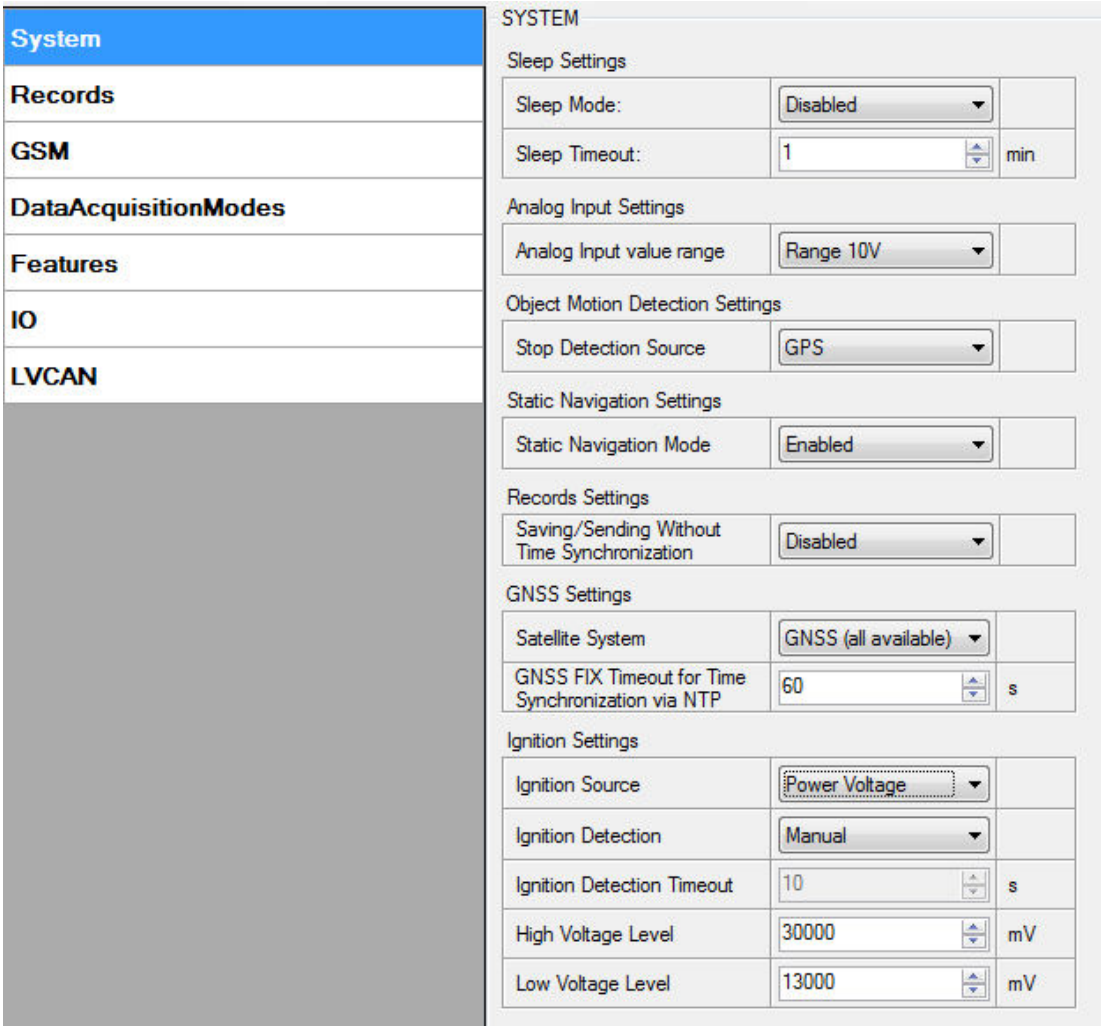


**Figure 21. System settings configuration**

Also if Power Voltage is chosen for ignition source there is possibility to choose Manual ignition detection or automatic ignition detection. For manual ignition user has to choose power voltage levels by himself. For automatic ignition FM3602/FM3612 automatically detects ignition, ignition is on if power voltage is between 13,2 – 16 V, or 27 – 32 V.

### 5.9 Records settings

Here user can modify if FM3602/FM3612 device will send newest records first, meaning, that the most important thing is to know recent position of car, older records are being sent right after newest records arrive to AVL application.

Activate Data Link Timeout is used to set timeout of link between FM3602/FM3612 and AVL application termination. If FM3602/FM3612 has already sent all records it waits for new records before closing link. If new records are generated in the period of this timeout, and minimum count to send is reached, they are sent to AVL application. This option is useful when GSM operator charge for link activation.

Server Response Timeout is used to set time period waiting for response from server side.

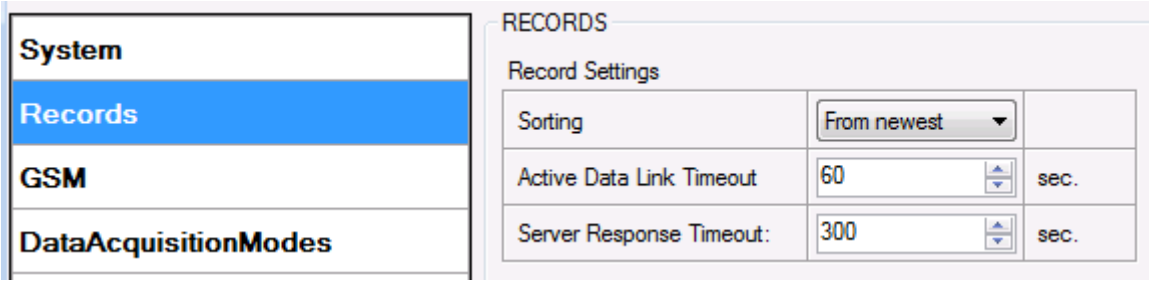


**Figure 22. Records settings configuration**

### 5.10 GSM settings, GPRS part

'GPRS' defines main parameters for FM36X2: GSM operator APN and GPRS username and password (optional – depending on operator), destination server IP and port, and allows to set protocol used for data transfers – TCP or UDP.

Yet user can choose if device will work only in GSM network, or it will prefer 3G network and switch to GSM only then 3G is absent.

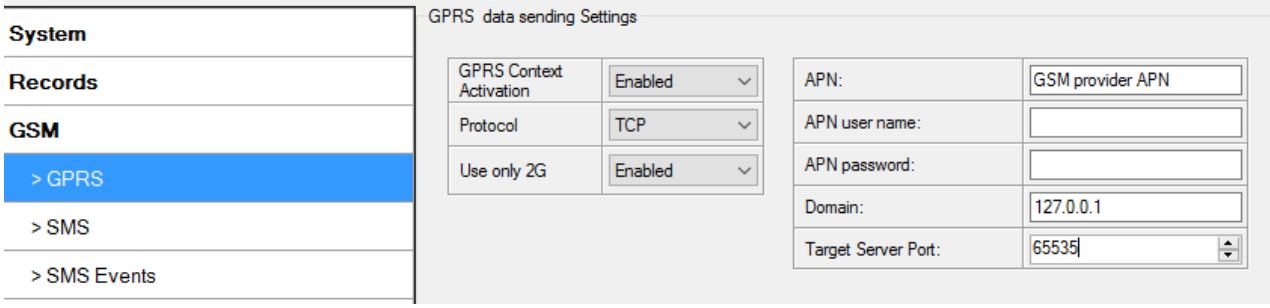


**Figure 23. GPRS configuration**

### 5.11 GSM settings, SMS part

Essential fields in 'SMS' part are 'Login' and 'Password'. The login and password are used with every SMS sent to FM36X2. If login and password are not set, in every SMS sent to FM3602/FM3612 device two spaces before command have to be used (<space><space><command>).

Command structure with set login and password:

<login><space><password><space><command>, example: "opa opa getgps"

Phone numbers have to be written in international standard, without using "+" or "00" signs in prefix. If no numbers are entered, configuration and sending commands over SMS are allowed from all GSM numbers.

SMS data sending settings – enable or disable **periodic** data and event SMS usage. This setting does not affect replies to SMS request messages – answers are always sent back to sender telephone number.

FM3602/FM3612 can send binary SMS with 24-coordinates-in-one-SMS. It is used in areas where no GPRS coverage is available. Module collects data and sends to server binary SMS containing information about last 24 collected points. SMS sending schedule is set in SMS Week Time tab and used Time zone is set in SMS Time Zone. 24-Coordinates SMS decoding is described in device protocols documentation. Please contact Teltonika sale manager to find out more about protocols documentation purchase

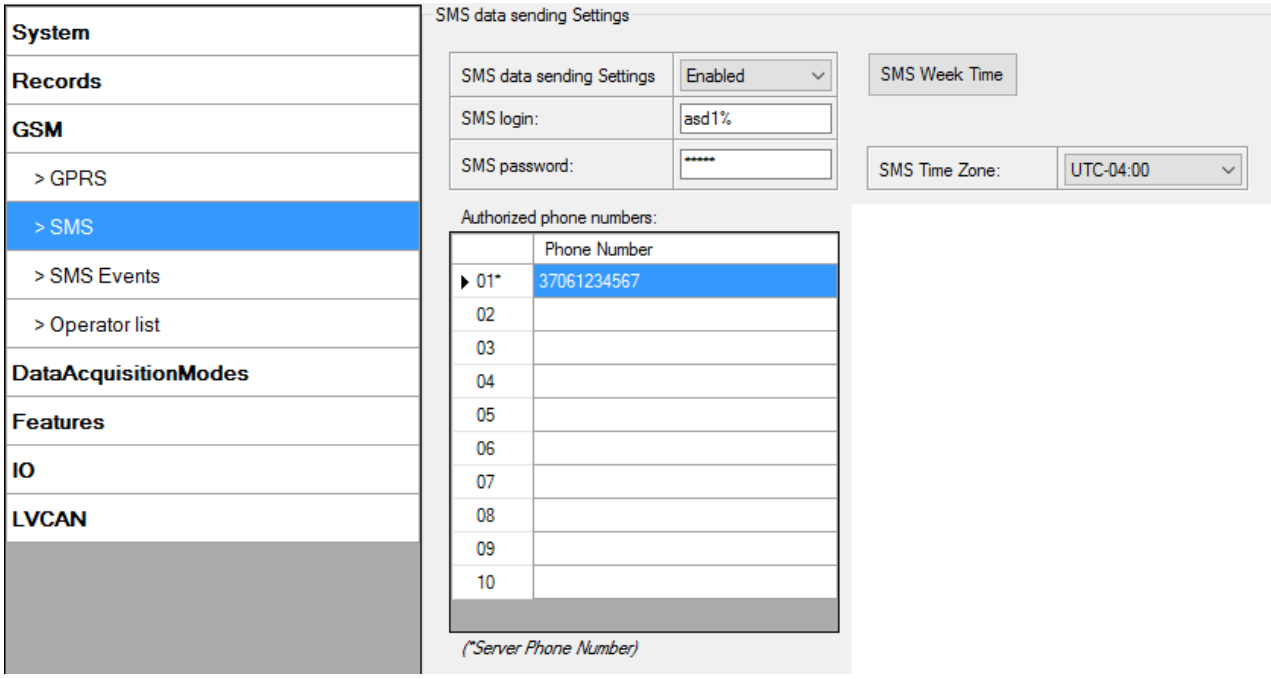


**Figure 24. SMS configuration**

**Note: A mobile phone will not understand SMS with binary code, so sending it to a mobile phone is useless. When sending a binary SMS to a phone number, which is a server phone number, the server can interpret and understand binary code, so the data can be read and you can view it on the server.**

**SMS login and password and authorized number list are used to protect FM3602/FM3612 module from unauthorized access. Module accepts messages only from a list of authorized numbers and with proper module login and password. Numbers must be without "+" or "00" prefix. If no authorized numbers are entered, module accepts messages from all numbers.**

### 5.12 GSM settings, Operator list

Operators list – FM3602/FM3612 can work in different modes (use different settings) according to the operator list defined. Operator list is used for Data Acquisition Mode switching (see chapter 5.13 Data Acquisition Mode settings for more details). Modes are changed based on 3G/GSM operator FM3602/FM3612 is connected to.

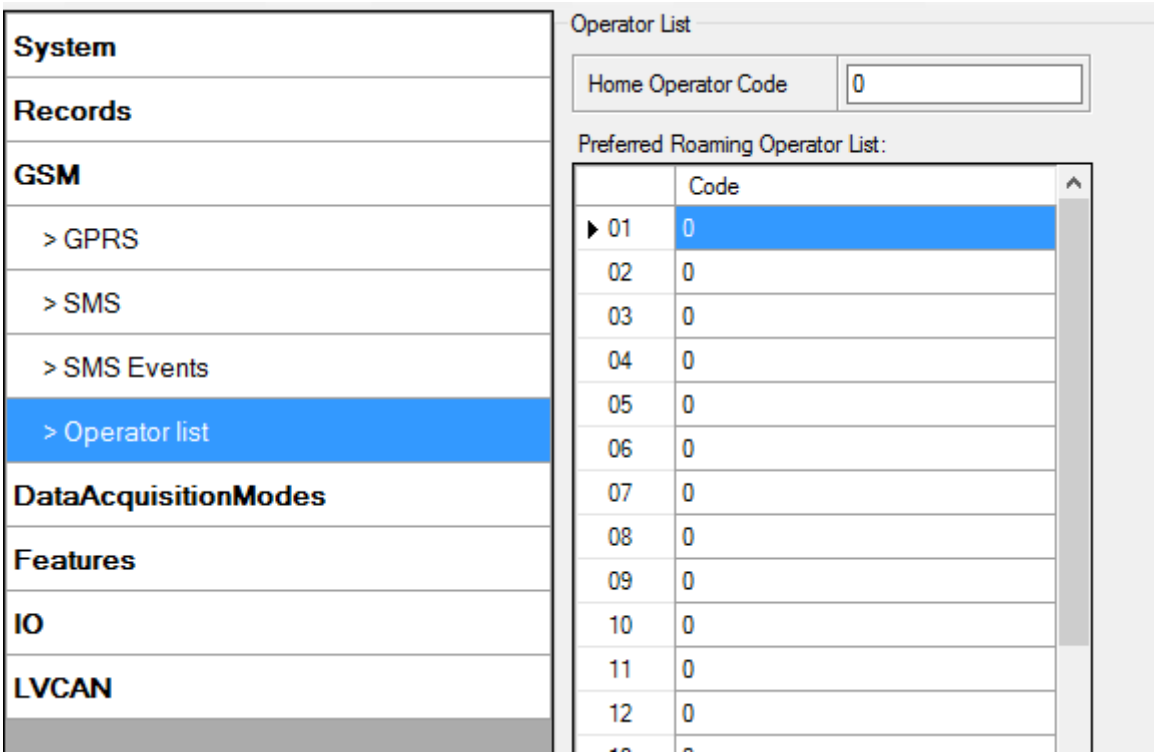


**Figure 25. Operator list configuration**

If operator list is left empty, it will allow using GPRS to any GSM operator. Please note that FM3602/FM3612 will work in **Unknown mode only** (make sure it is configured to allow data sending – GPRS context is enabled).

### 5.13 Data Acquisition Mode settings

Data Acquisition Modes are an essential part of FM3602/FM3612 device, it is also highly configurable.

By configuration user defines how records will be saved and sent. There are three different modes: Home, Roaming and Unknown. All these modes with configured data acquisition and send frequencies depend on current GSM Operator defined in Operator list (see section 5.12) and are switched when GSM operator changes (e.g. vehicle passes through country boarder).

If current GSM operator is defined as Home Operator, device will work in Home Data Acquisition mode, if current operator is defined as Roaming Operator, device will work in Roaming Data Acquisition mode, and if current operator code is not written in Operator list (but

there is at least one operator code in the operator list), device will work in Unknown Acquisition mode.

This functionality allows having different AVL records acquire and send parameters values when object is moving or stands still. Vehicle moving or stop state is defined by Stop Detection Source parameter. There are 3 ways for FM3602/FM3612 to switch between Vehicle on Stop and Vehicle Moving modes see section 5.7.

FM3602/FM3612 allows having 6 different modes. Operational logic is shown in Figure 26.

**If there are no operator codes entered into operator list, FM3602/FM3612 will work in Unknown network mode ONLY.**

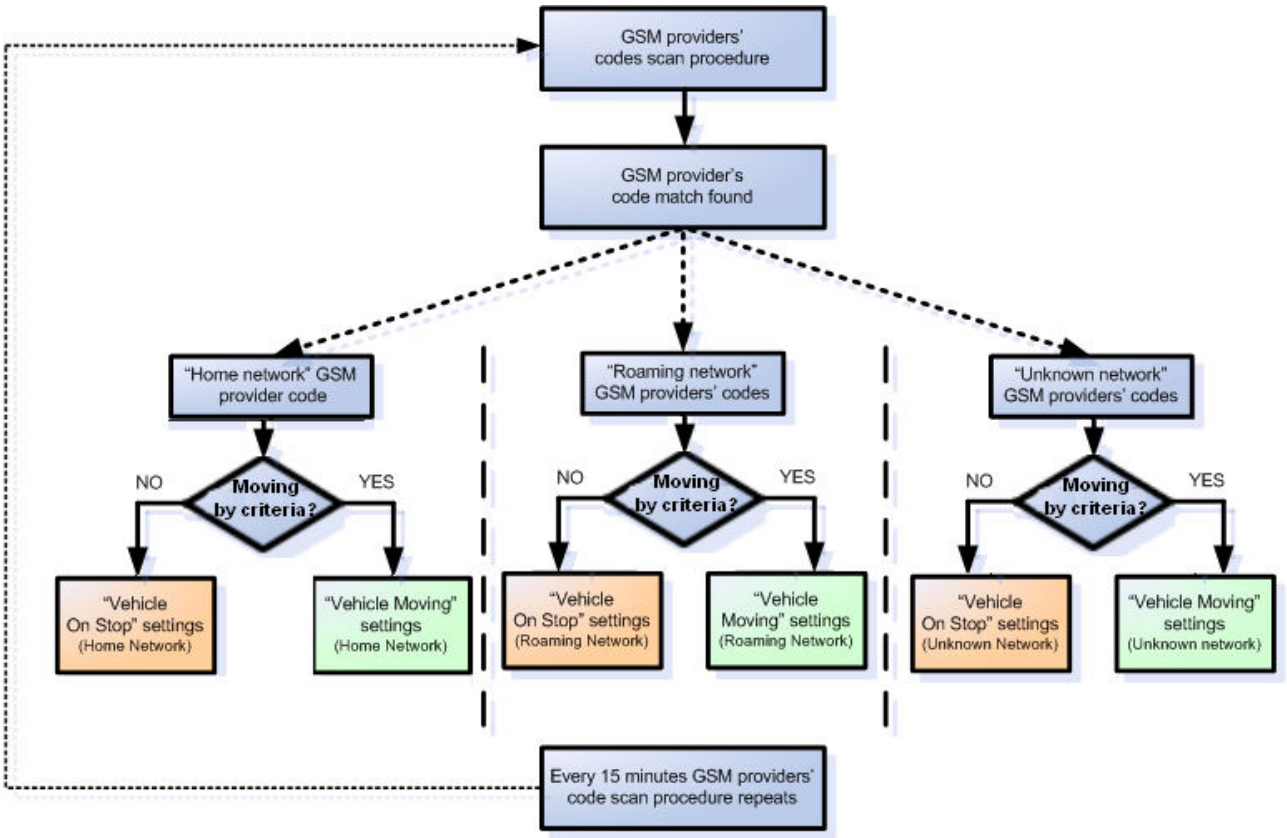


**Figure 26. Data Acquisition Mode configuration**

Operator search is performed every 15 minutes. Depending on current GSM operator, Home, Roaming or Unknown mode can be changed faster than every 15 minutes. This process is separate from operator search. Movement criteria are checked every second.

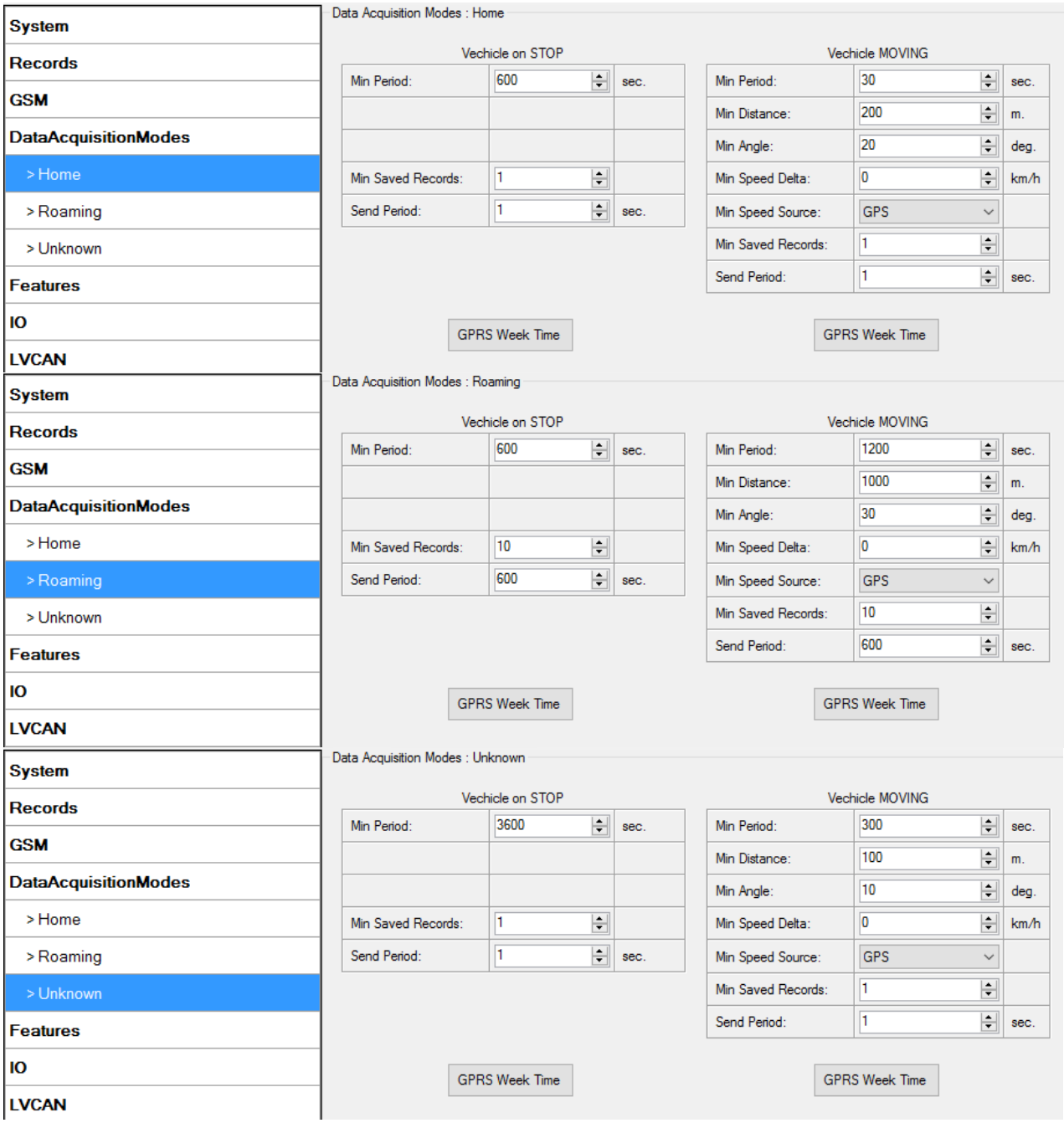


**Figure 27. Data Acquisition Mode configuration**

'Min Saved Records' defines minimum number of coordinates and I/O data that should be transferred with one connection to server. If FM3602/FM3612 does not have enough coordinates to send to server, it will check again after time interval defined in 'Sending Period'

Send period – GPRS data sending to server period. Module makes attempts to send collected data to server every defined period. If it does not have enough records (depends on parameter Min. Saved Records described above), it tries again after defined time interval.

GPRS Week Time tab – most GSM billing systems charge number of bytes (kilobytes) transmitted per session. During the session, FM3602/FM3612 makes connection and transmits

data to a server. FM3602/FM3612 tries to handle the session as much as possible; it never closes session by itself. Session can last for hours, days, weeks or session can be closed after every connection in certain GSM networks – this depends on GSM network provider. GPRS Context Week Time defines session re-establish schedule if session was closed by network. New GPRS context is opened if time is 10 minutes till time checked in table. Therefore if all boxes are checked, FM3602/FM3612 is able to open new connection anytime. At scheduled time match FM3602/FM3612 checks for GPRS session activity. If GPRS session is alive, FM3602/FM3612 sends data to server according to Send period parameter. If it is not, FM3602/FM3612 checks if it is able to re-establish the session.

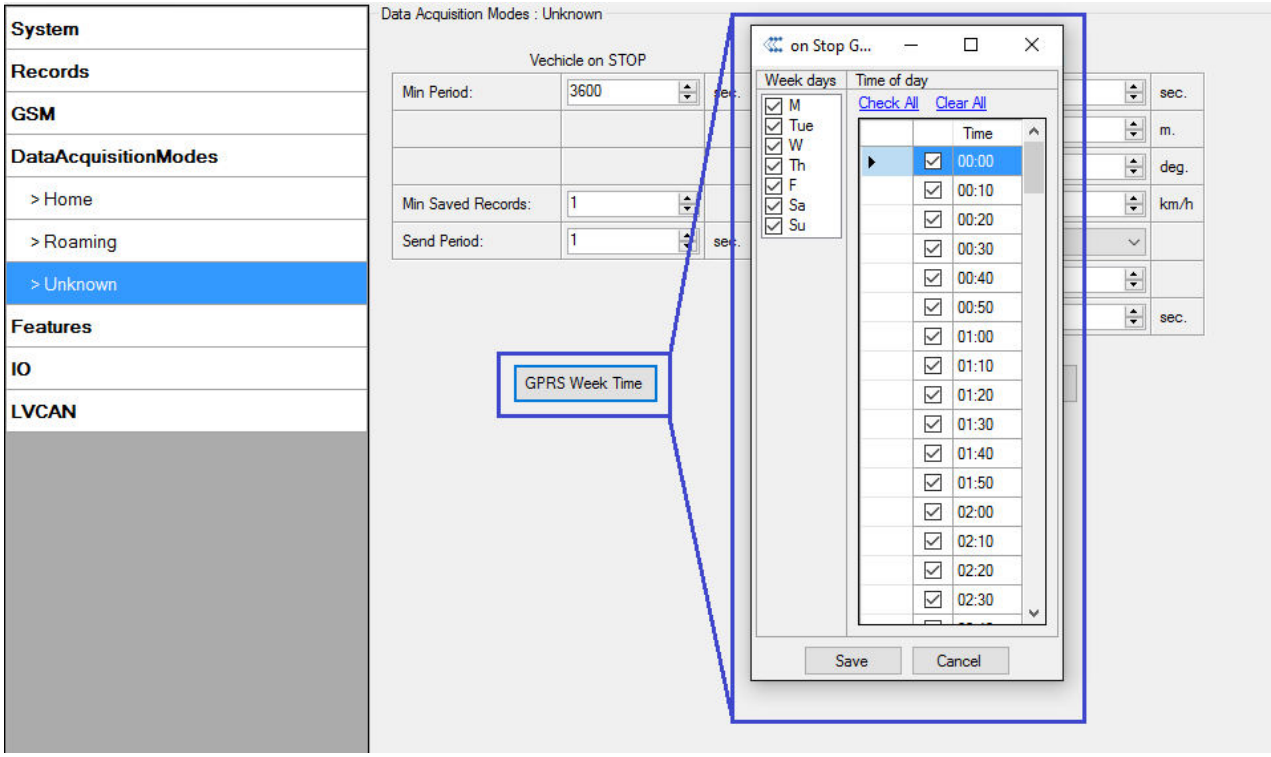


**Figure 28. GPRS Week Time configuration**

Device checks if the time between last saved record and current time is equal or higher than Time based acquire interval. If so, FM3602/FM3612 saves record to memory. If not, FM3602/FM3612 checks if the distance from last record to current record is equal or higher than Distance based acquire interval. If so, saves the record to memory. If not and speed is higher than 10km/h, then FM3602/FM3612 checks if angle difference between last record and current record is equal or higher than Angle based acquire value. If so, saves the record to memory. These checks are performed every second.

**Note: Keep in mind that FM3602/FM3612 operates in GMT:0 time zone, without daylight saving.**

FM3602/FM3612 is able to collect records using four methods at the same time: time, distance, angle and speed based data acquisition:

Time based data acquiring (Min. period) – records are being acquired every time when defined interval of time passes. Entering zero disables data acquisition depending on time.

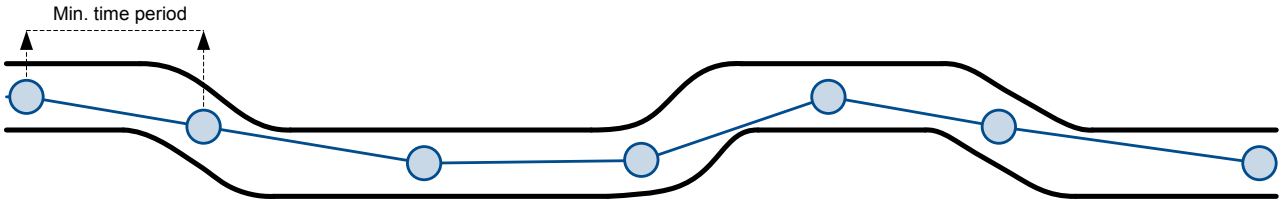


Distance based data acquiring (Min. distance) – records are being acquired when the distance between previous coordinate and current position is greater than defined parameter value. Entering zero disables data acquisition depending on distance.

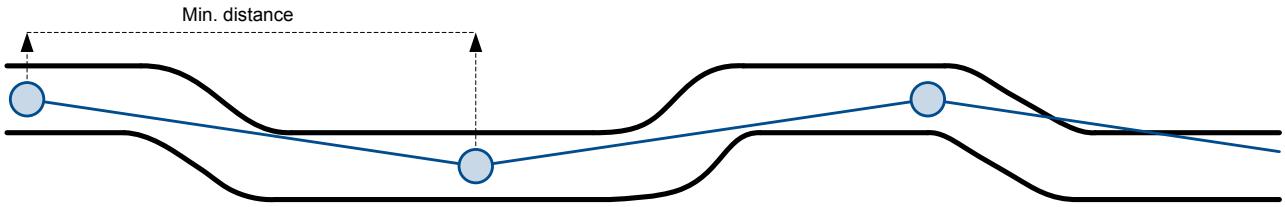


Angle based data acquiring (Min. angle) – records are being acquired when angle difference between last recorded coordinate and current position is greater than defined value. Entering zero disables data acquisition depending on angle.

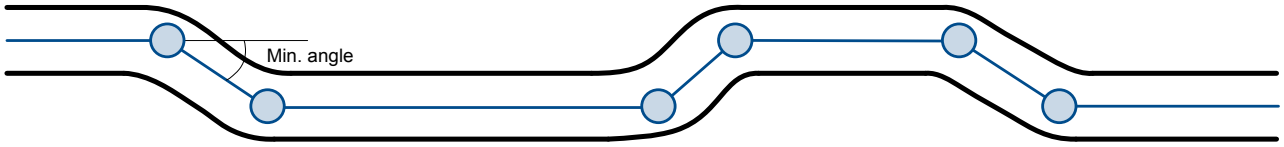


Speed based data acquiring (Min. speed delta) – records are being acquired when speed difference between last recorded coordinate and current position is greater than defined value. Entering zero disables data acquisition depending on speed.

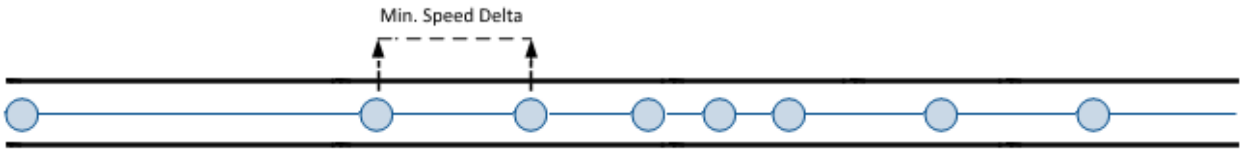

### 5.14 Features settings

For more information about available Scenarios, Trip, Geofencing and iButton list, refer to 5.4 chapter.

#### 5.14.1 Scenarios settings

In Scenarios window six different scenarios are available: Green driving, Over Speeding, Excessive Idling, Immobilizer, iButton List checking and Jamming. All scenarios can use DOUT together, but if DOUT1 is assigned to Immobilizer, other scenarios can't control it.

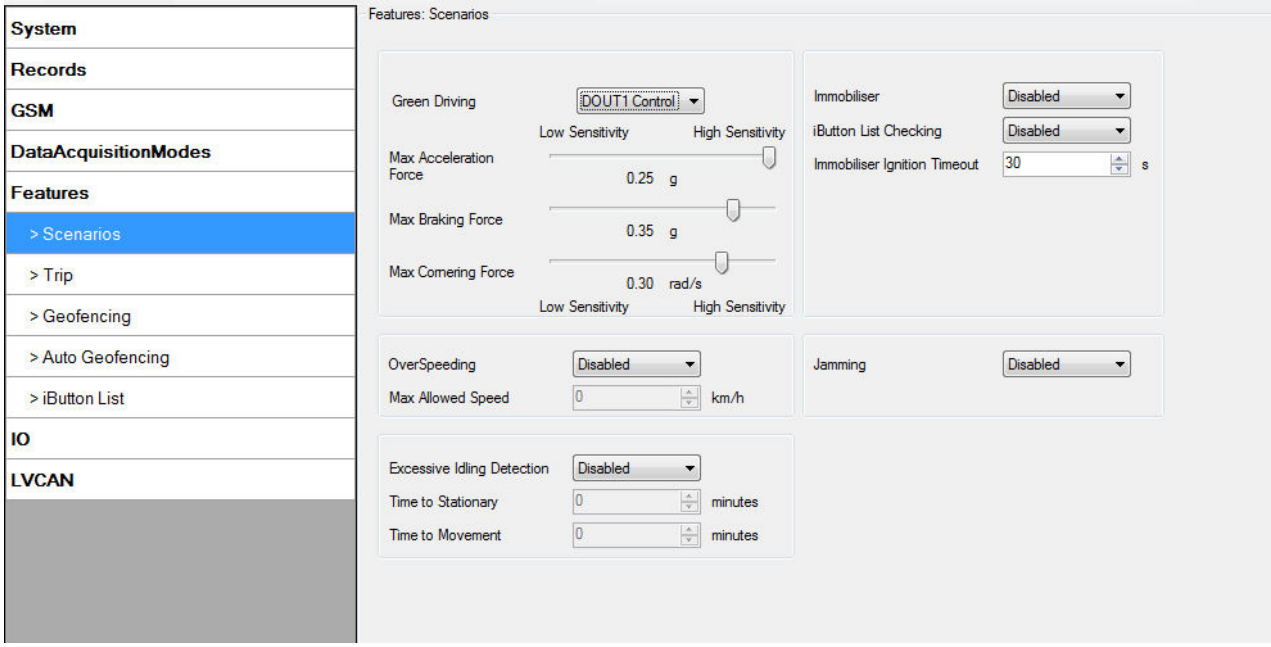


**Figure 29. Scenarios configuration**

Digital Output (open drain grade) usage in scenarios:

- Green Driving

  DOUT1 is ON (if selected DOUT1) for:
  - 3sec. if detected value is over (0; 30] % from preconfigured allowed value;
  - 5sec. if detected value is over (30; 50] % from preconfigured allowed value;
  - 7sec. if detected value is over (50; -] % from preconfigured allowed value.

  After period of time DOUT1 is turned OFF.

- Over Speeding

  DOUT1 is ON (if selected DOUT1), while vehicle speed exceeds parameter value. DOUT1 is activated until current speed decreases below parameter value.

- Excessive Idling Detection.

If ignition is ON and no movement, event will be generated when TMO reached. User can enable this functionality, select timeouts for stationary time and for movement time.

- Jamming detection (if selected DOUT1)

DOUT1 is ON, while modem is fixing radio frequency jamming. After jamming is over, DOUT1 is deactivated.

- Authorized driving (if selected DOUT2)

DOUT2 is continuously OFF. Dout2 turns ON if Ignition turns ON (configured Ignition Source =1). After authorizing iButton (iButton ID is read and it matches the ID from the iButton list), DOUT2 turns OFF. After successful authorization ignition can be turned OFF (configured Ignition Source =0) for no longer than 30 seconds, otherwise authorization must be repeated.

- Immobilizer (if selected DOUT2)

DOUT2 is continuously OFF. Dout2 turns ON if Ignition turns ON (configured Ignition Source = 1). After iButton ID is read (any iButton is attached), DOUT2 turns OFF. After iButton identification, ignition can be turned OFF (configured Ignition Source = 0) for no longer than 30 seconds, otherwise immobilizer must be repeated.

#### 5.14.2 Trip settings

Trip window offers user to configure Trip feature. If Trip is enabled configuration of parameters are enabled.

Start Speed – GNSS speed has to be greater than the specified Start Speed in order to detect Trip Start.

Ignition Off Timeout – timeout to wait if ignition was off, to detect Trip stop.

Distance Mode – Between records, Continuous trip or Continuous can be chosen. For this feature I/O Odometer must be enabled (see Figure 30).

If I/O Odometer is enabled and Distance Mode variable is set to “Continuous trip”, **Trip distance** is going to be counted continuously (**from Trip start to Trip stop**). This value is written to I/O Odometer value field. When Trip is over and next Trip begins, Odometer value is reset to zero. When the next trip starts counting continuously starts from the beginning again.

If I/O Odometer is enabled and Distance Mode variable is set “Between records”, then the distance is going to be counted only between every record made. This value is written to I/O Odometer value field and reset to zero every new record until Trip stops.

If I/O Odometer is enabled and Distance Mode variable is set “Continuous”, **Trip distance** is going to be counted continuously (Starting from trip start, trip distance is saved to flash memory).

Continuous Odometer Value – gives ability to set starting value of the “Continuous” trip.

Remember iButton ID – devices remembers connected iButtons id(While trip is detected) and sends it to server along with periodical records.

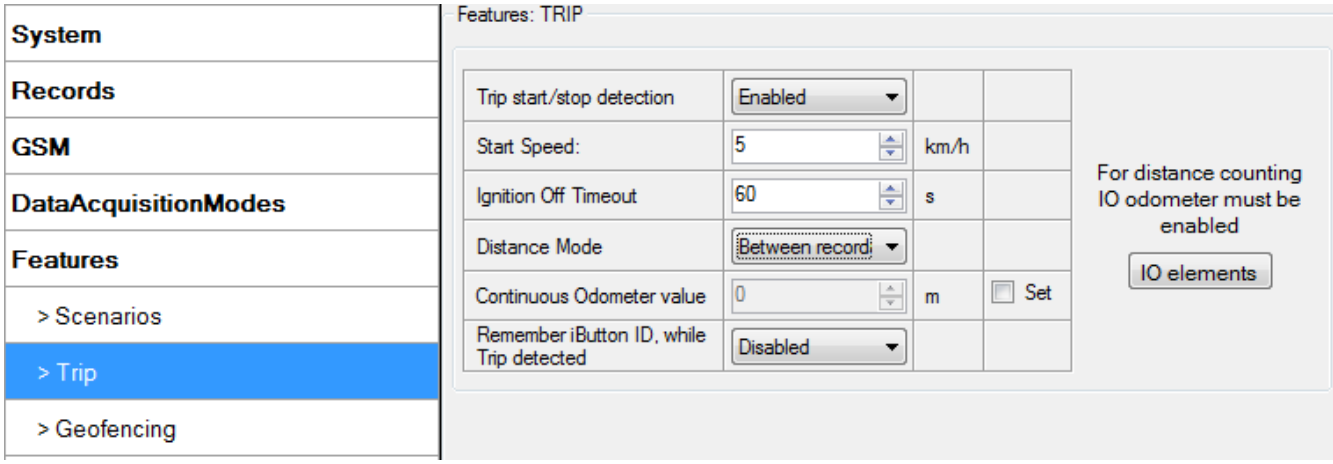


**Figure 30. Trip configuration**

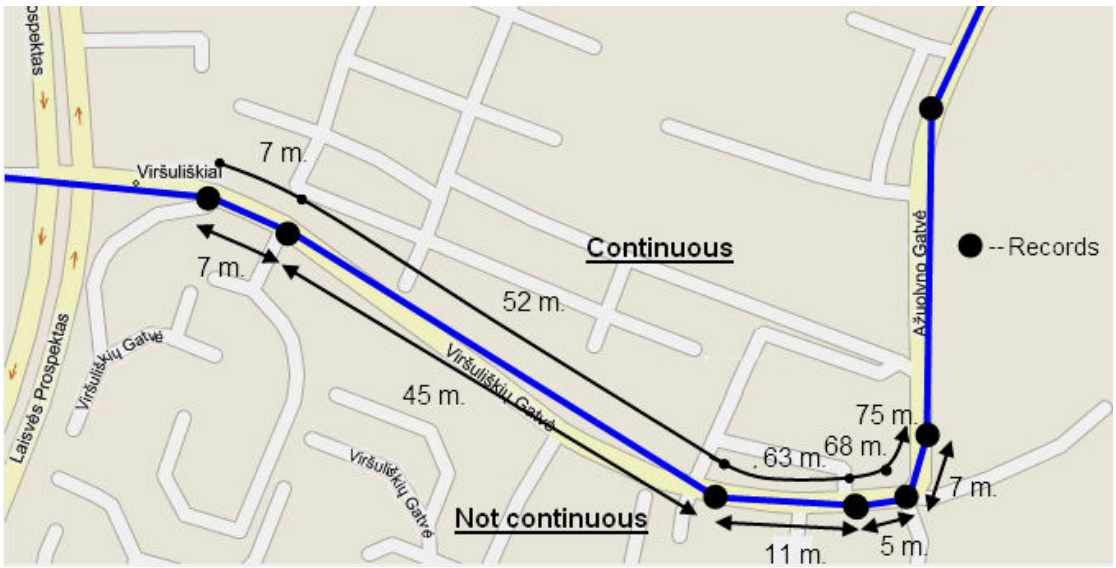


**Figure 31. Trip continuous distance counting parameter example**

### 5.14.3 Geofencing settings

FM3602/FM3612 has 5 configurable Geofence zones and it can generate an event when defined Geofence zone border is crossed.

Frame border – frame border is an additional border around Geofence zone. It is additional area around defined zone used to prevent false event recording when object stops on the border of the area and because of GNSS errors some records are made inside area and some – outside. Event is generated only when both borders are crossed. See figure 32 for details: track 1 is considered to have entered the area while track 2 is not.

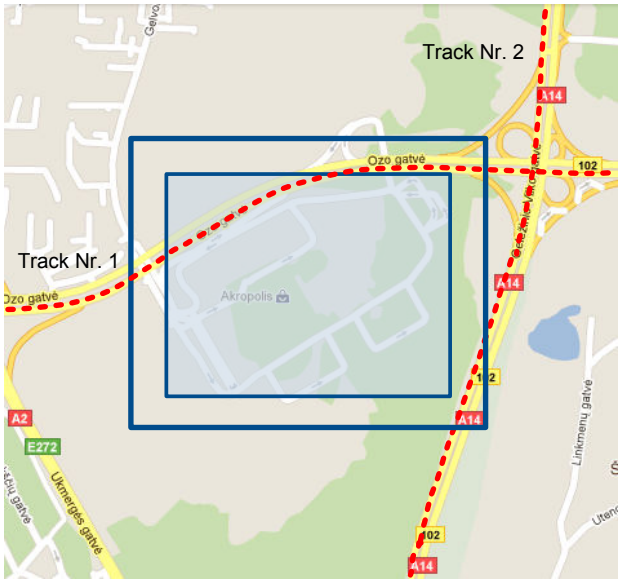


**Figure 32. Geofence border**

Shape – can be rectangle or circle

Priority – priority of Geofence event: low, high or panic. These levels define priority of event information sending to server. See I/O element description for more details about priorities.

Generate event (On entrance, On exit, On Both) – choose when record will be generated;

X1 – geofence zone left bottom corner X coordinate (longitude);

Y1 – geofence zone left bottom corner Y coordinate (latitude);

X2 or R – geofence zone upper right corner X coordinate (longitude) or radius of circle when Circular zone is used (radius in meters);

Y2 – geofence zone upper right corner Y coordinate (latitude);

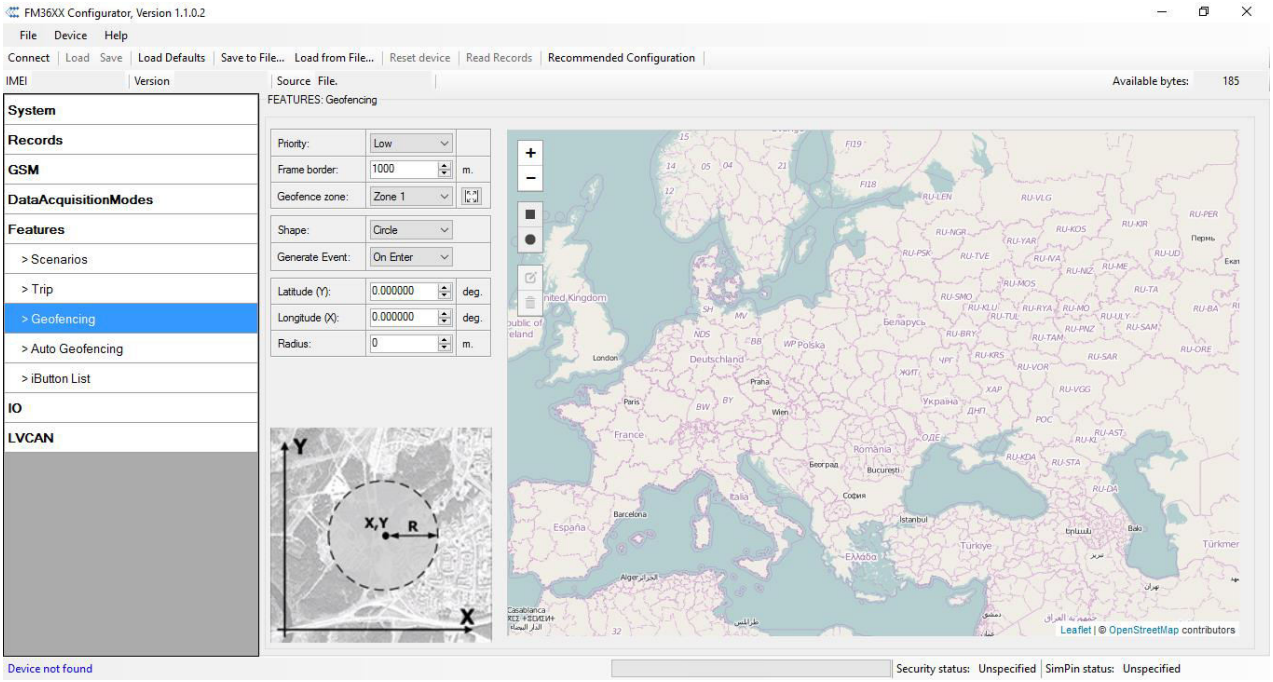


**Figure 33. Geofence configuration**

**AutoGeofencing settings**

AutoGeofence – the last known position after movement = off. If your car's being taken away – you can be notified. The shape and size of the geofence zones are parameters. When object will leave geofence zone device will trigger an asynchronous message.

AutoGeofencing option can be configured by following parameters visible in Figure 34 below.

Activation TMO – Time period before Geofence is activated after vehicle stops.

Deactivate By:

Ignition – If ignition (configured Ignition Source) becomes high it will disable AutoGeofenze Zone.

iButton – if iButton is attached it will disable AutoGeofence Zone.

Edit iButton List – if list is not empty, attached iButton is tested against an iButton list, if match is found AutoGeofence zone is disabled.

Priority – Priority of generated event, which will be applied to saved record.

Exit Event – Event generation on Geofence exit.

On Both – Event generation on Geofence exit.

Note that AutoGeofencing does not require entering coordinates, instead it requires GNSS visibility. If vehicle stopped and activation timeout has passed, an AutoGeofence will be created around vehicle's last position with set Radius value. AutoGeofence event generation works the same as Geofencing mentioned above.

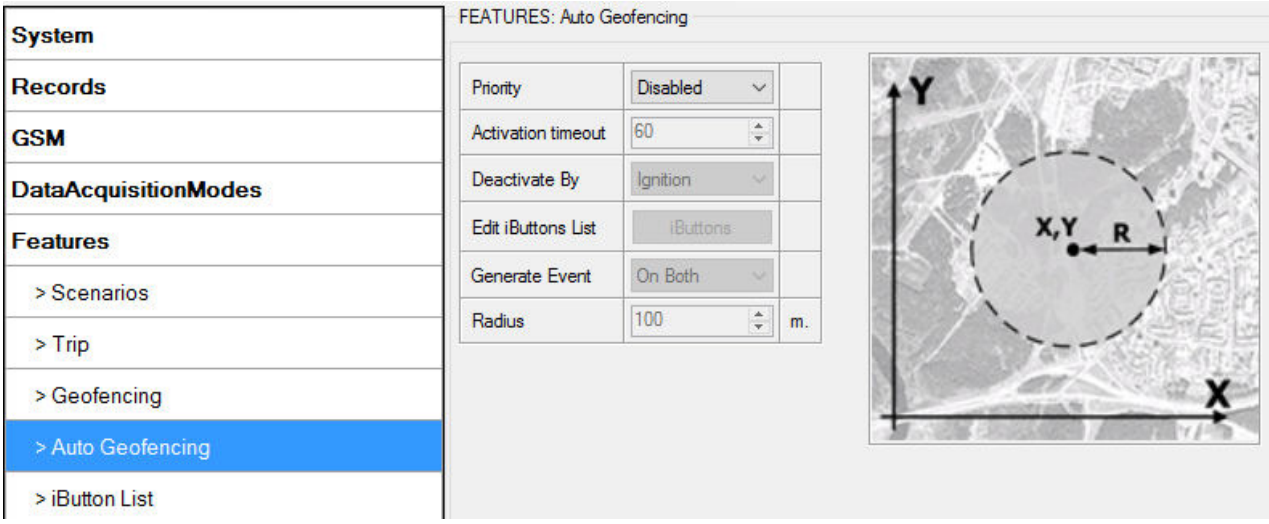


**Figure 34. Geofence configuration**

**Note: FM3602/FM3612 operates GMT:0 time without daylight saving.**

### 5.14.4 SMS events

SMS events functionality allows FM3602/FM3612 to send a configured SMS when an event is triggered. This event can be triggered by:

- Green Driving;
- OverSpeeding;
- Authorized Driving;
- Immobilizer;
- Trip start/stop;
- Geofence;
- AutoGeofence;
- I/O event.

When any of the above events is triggered, FM3602/FM3612 sends a configured SMS message to a defined phone number. If SMS events is activated, but there are no numbers defined in SMS events PreDefined Numbers list (figure 35), then the device will not send any messages.

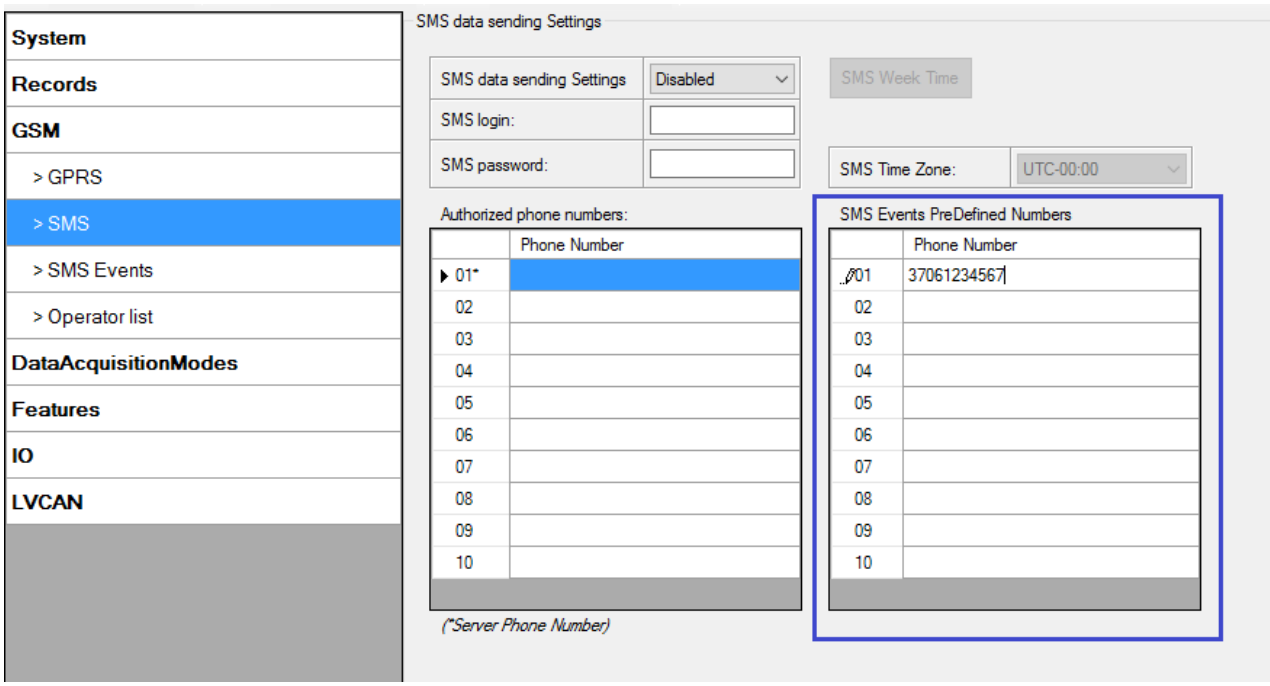


**Figure 35. SMS Events PreDefined Numbers list**

The sent SMS messages format is according to:

*"Date Time EventText"*

For example, if FM3602/FM3612 is configured to send an SMS (figure 36), when Digital Input 1 reaches High level, with priority High and configured to generate event on both range enter and exit (figure37), then the sent SMS is:

*"2016/1/20 12:00:00 Digital Input 1"*

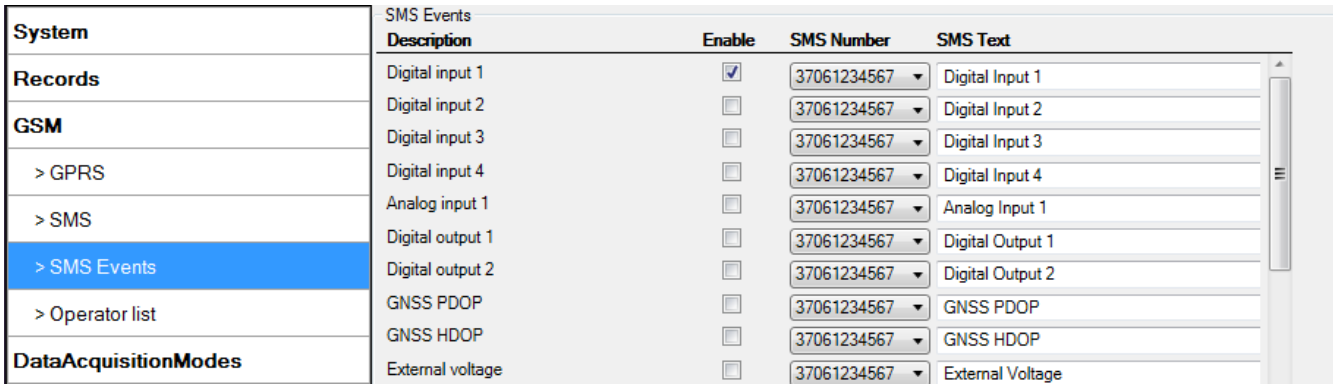


**Figure 36. Configured Digital Input 1 SMS Event**

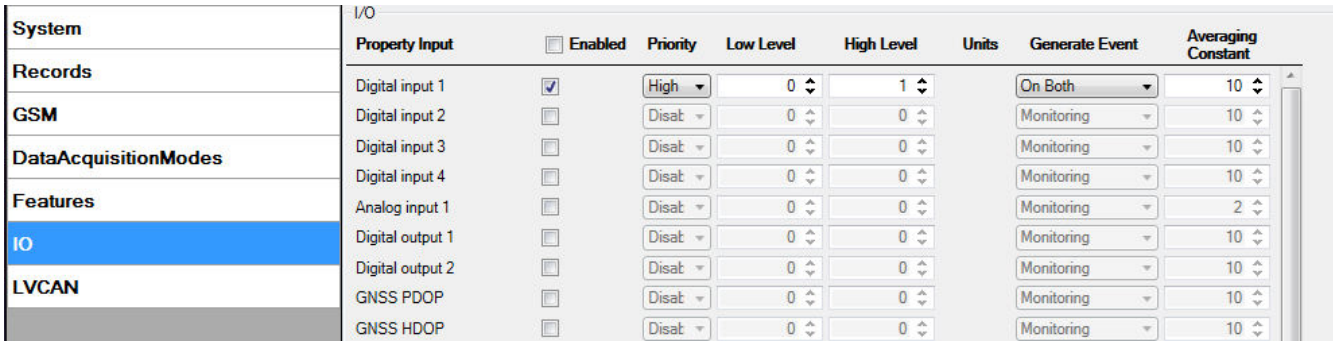


**Figure 37. Configured Digital Input 1 to generate event on both range enter and exit**

The SMS Text field can be altered and any text can be entered. Maximum message length is 90 symbols (numbers, letters and symbols in ASCII, except for comma “,”).

**ATTENTION!**
**If FM3602/FM3612 is in Deep Sleep mode and SMS event occurs with LOW priority (which does not wake up FM36X2), then the device does not send the message. It is saved in device memory until it wakes up from Deep Sleep mode and GSM modem starts working normally. After it wakes up, all the messages that are saved in memory will be sent, but keep in mind that only 10 messages can be saved in memory – all other messages will not be saved, until there is room in device memory.**

#### 5.14.4.1 SMS events configuration

Scenarios

To configure SMS events for scenarios, open Scenarios window and Enable desired scenario. Then go to GSM ->SMS -> SMS events window and activate SMS event for Enabled scenario. Figure 38 shows how to enable Green Driving and Immobilizer SMS Events.

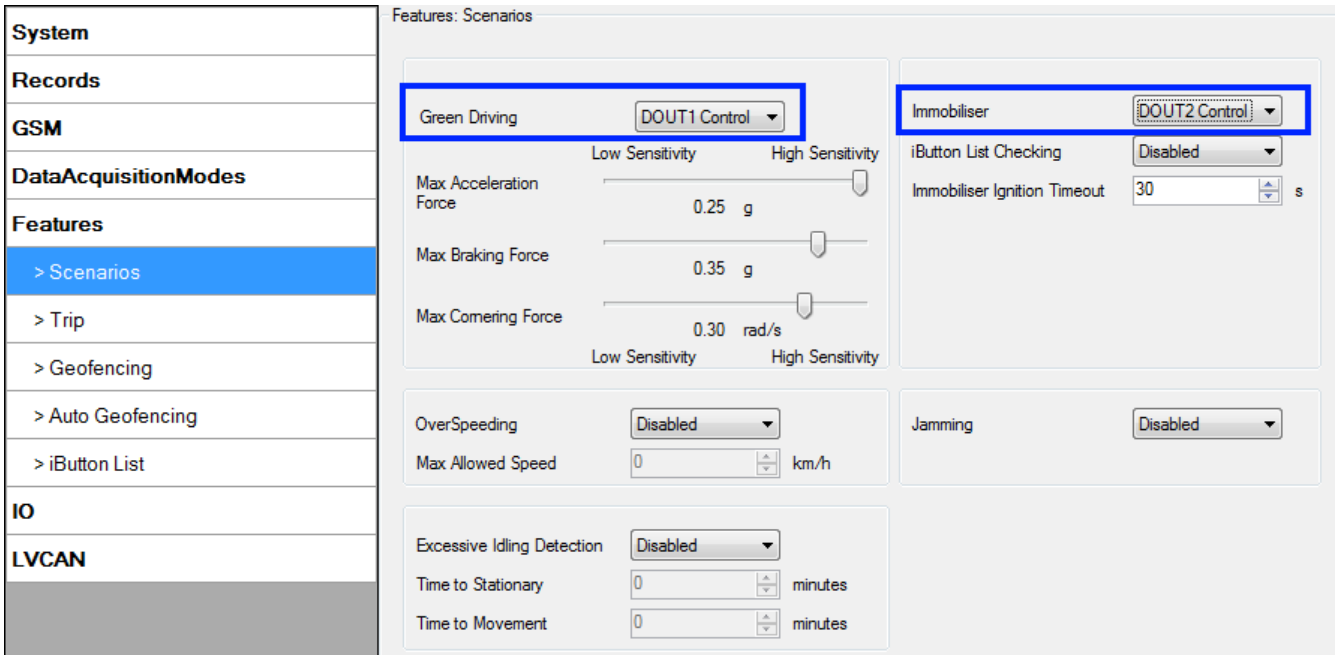


**Figure 38. Scenarios SMS event configuration**

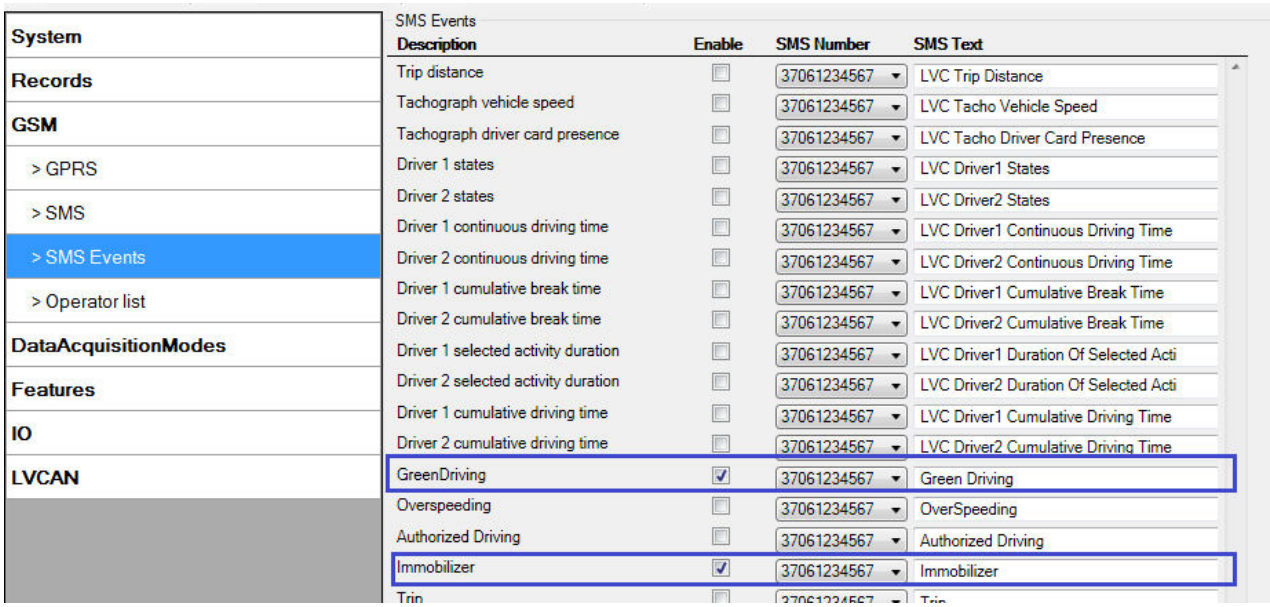


**Figure 39. Scenarios SMS event configuration**

When any of the scenarios events occurs, a text message will be sent to the predefined number.

## Trip

In order to configure Trip SMS events click on Trip window and Enable Trip feature (figure 40). Then go to GSM -> SMS -> SMS Events settings and Enable Trip SMS event. After enabling SMS Events (figure 41), trip event will be triggered and message sent, when Trip starts (GNSS speed exceeds the speed in Start Speed (ex. 5 km/h) and when Trip stops, that is ignition is turned off longer then the time written in Ignition Off Timeout (ex. 60 seconds).

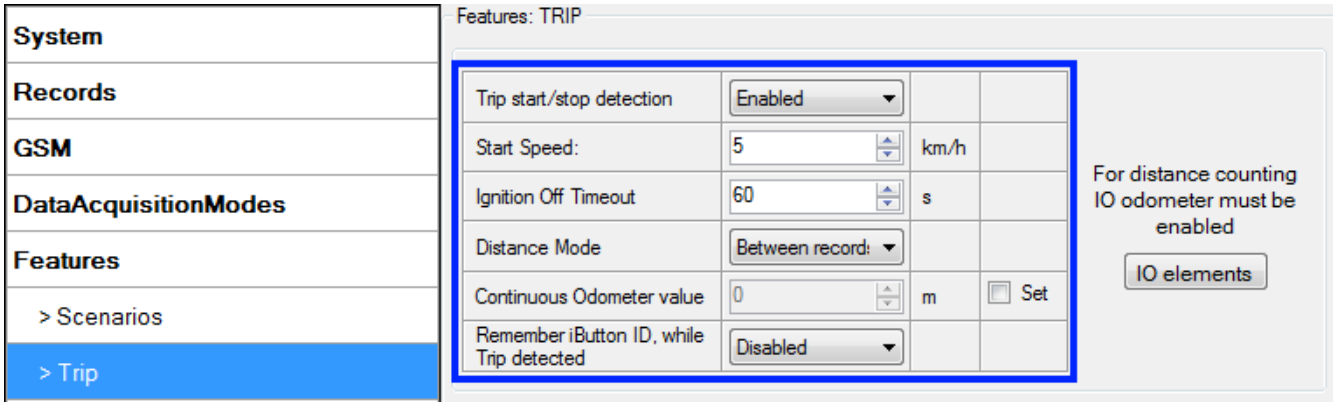


**Figure 40. Trip Start/Stop SMS event configuration**

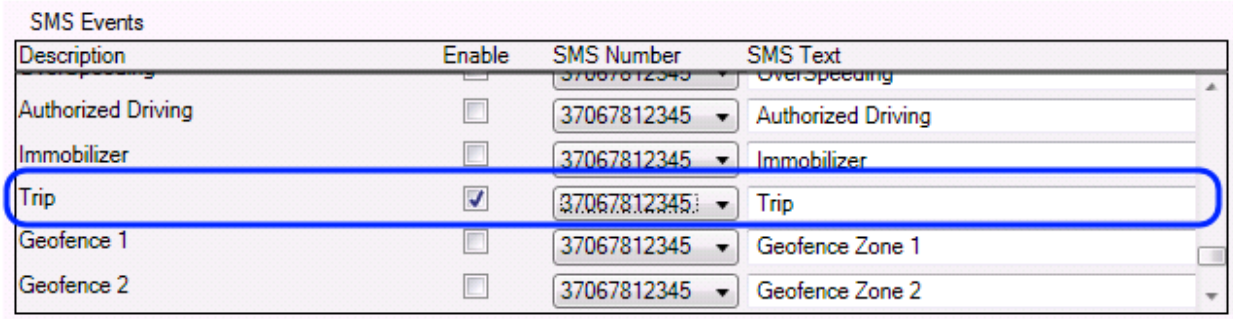


**Figure 41. Trip Start/Stop SMS event configuration**

## Geofence

Geofence SMS event is triggered and message sent when the device exits and/or enters a configured Geofence zone. The Geofence zone must be configured to generate an event On Exit, On Enter or On Both (figure 42). If No Event is selected, then it is not possible to turn on SMS events. If several zones are created then SMS events can be turned on separately for each zone entering different text message.

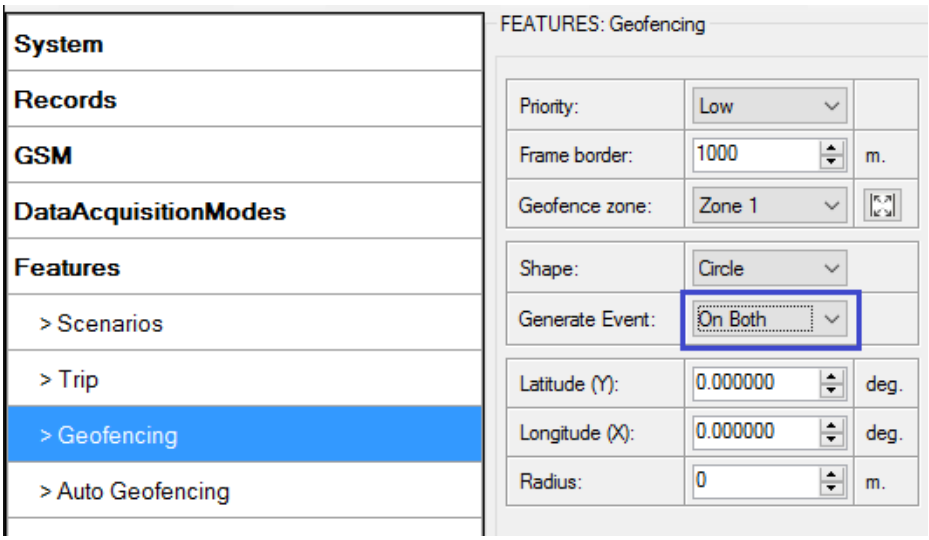


**Figure 42. Geofence SMS event configuration**

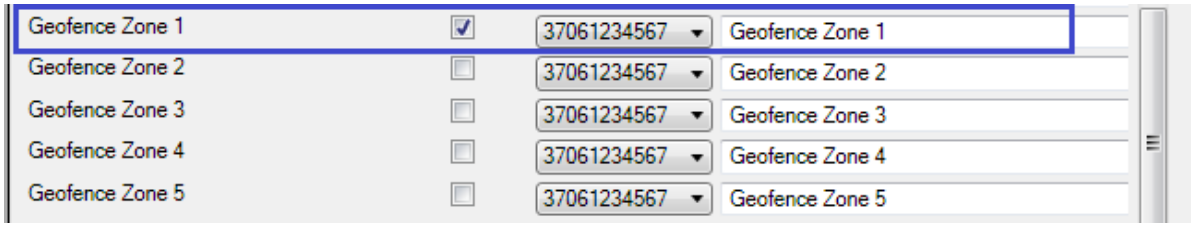


**Figure 43. Geofence SMS event configuration**

## AutoGeofence

SMS events for AutoGeofence are configured the same as in Geofence. AutoGeofence is in Features -> Auto geofencing (figure 44), for SMS events configuration, go to GSM -> SMS -> SMS Events (figure 45).

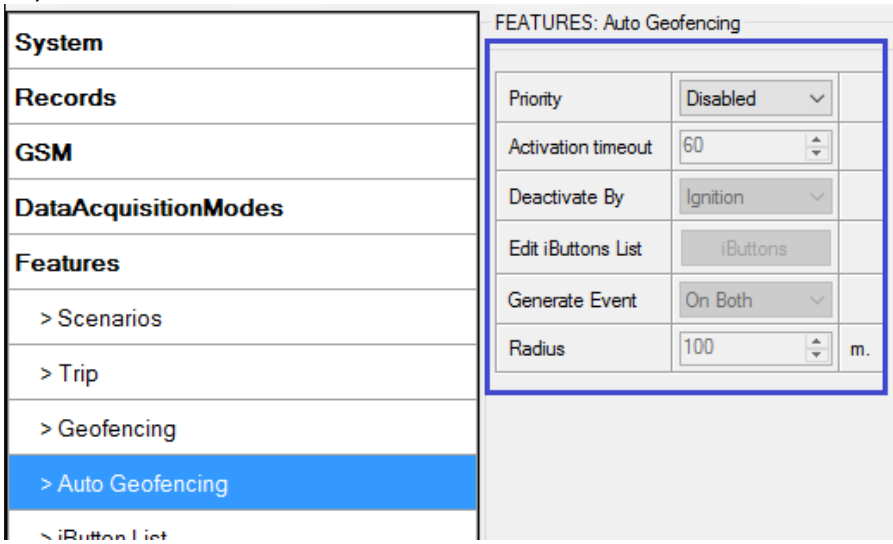


**Figure 44. AutoGeofence configuration**

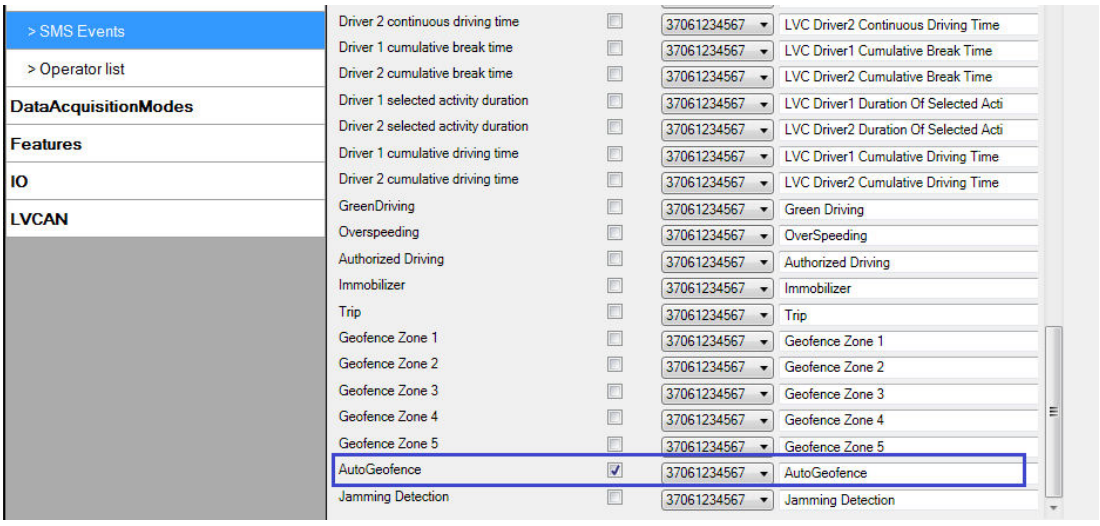


**Figure 45. AutoGeofence SMS event configuration**

### I/O events

FM3602/FM3612 sends SMS event message when a configured I/O property enters and/or exits its configured High/Low boundaries or Hysteresis event generation is chosen (Monitoring does not generate event, so SMS event could not be configured). Every IO element SMS event can be configured to send individual message to different numbers.

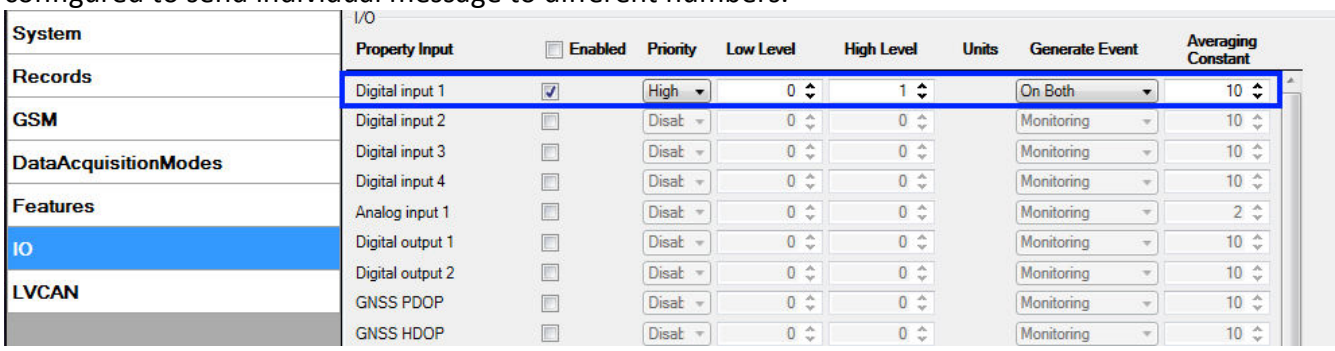


**Figure 46. I/O event configuration**

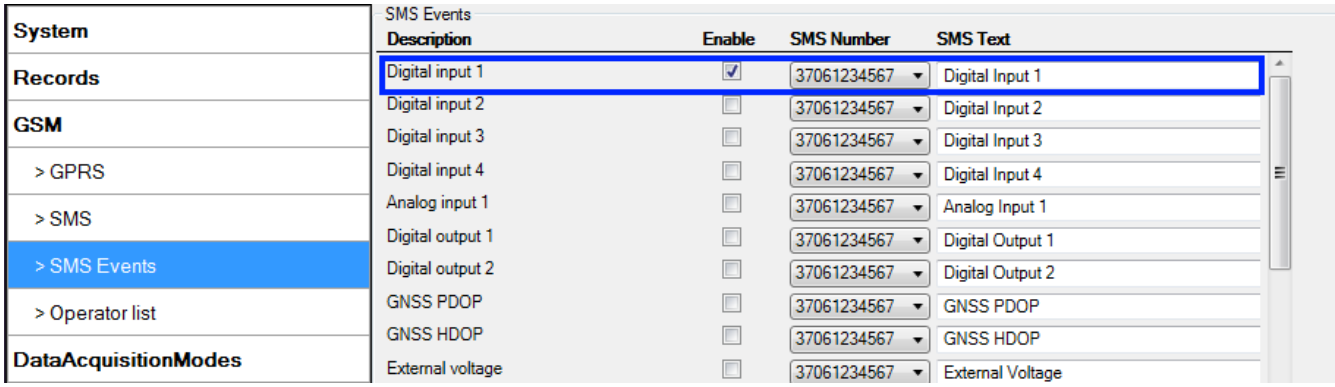


**Figure 47. I/O SMS event configuration**

## 5.15 I/O settings

When no I/O element is enabled, AVL packet comes with GNSS information only. After enabling I/O element(s) AVL packet along with GNSS information contains current value(s) of enabled I/O element.

| Permanent I/O elements (are always sent to server if enabled) | | |
|---|---|---|
| Nr. | Property Name | Description |
| 00 | Digital Input Status 1 | Logic: 0 / 1 |
| 01 | Digital Input Status 2 | Logic: 0 / 1 |
| 02 | Digital Input Status 3 | Logic: 0 / 1 |
| 03 | Digital Input Status 4 | Logic: 0 / 1 |
| 04 | Analog Input 1 | Voltage: mV, 0 – 30 V |
| 05 | Digital Output 1 | Logic: 0 / 1 |
| 06 | Digital Output 2 | Logic: 0 / 1 |

| | | |
|---|---|---|
| 07 | GNSS PDOP | Probability * 10; 0-500 |
| 08 | GNSS HDOP | Probability * 10; 0-500 |
| 09 | External Voltage | Voltage: mV, 0 – 30 V |
| 10 | GNSS Power | States:<br>0 – off state (when GPS module is off)<br>1 – Reserved<br>2 – GPS ready (antenna is working, but with no GPS fix)<br>3 – GPS working (antenna is working and has GPS fix)<br>4 – GPS sleep (when device is in GPS sleep mode)<br>5 – Overcurrent (The only condition to get value 5, then antenna is damaged and short circuit) |
| 11 | Movement Sensor | 0 – not moving, 1 – moving. |
| 12 | Odometer Value | Distance between two records: m |
| 13 | GSM Operator | Currently used GSM Operator code |
| 14 | Speed (Km/h) | Value in km/h, 0 – xxx km/h |
| 15 | iButton ID | iButton ID number |
| 16 | Mode | 0 – home on stop, 1 – home on move, 2 – roaming on stop, 3 – roaming on move, 4 – unknown on stop, 5 – unknown on move |
| 17 | GSM Signal | GSM signal level value in scale 1 – 5 |
| 18 | Deep Sleep | 0 – not deep sleep mode, 1 – deep sleep mode |
| 19 | Cell ID | GSM base station ID |
| 20 | Area Code | Location Area code (LAC), it depends on GSM operator. It provides unique number which assigned to a set of base GSM stations. Max value: 65536 |
| 21 | Dallas Temperature 1 | 10 * Degrees (°C), -55 - +115, if 3000 – Dallas error |
| 22 | Dallas Temperature 2 | 10 * Degrees (°C), -55 - +115, if 3000 – Dallas error |
| 23 | Dallas Temperature 3 | 10 * Degrees (°C), -55 - +115, if 3000 – Dallas error |
| 24 | Battery Voltage | Voltage: mV |
| 25 | Battery Charging Current | Current: mA |
| 26 | Ignition | Ignition status indication. Logic: 0 / 1 |
| 27 | Network Type | 0 – 3G network, 1 – 2G network |
| 28 | Continuous Odometer | Distance which device has been traveled with ignition ON: m |
| 29 | Dallas temperature ID1 | 1st connected dallas temperature sensor ID |
| 30 | Dallas temperature ID2 | 2nd connected dallas temperature sensor ID |
| 31 | Dallas temperature ID3 | 3rd connected dallas temperature sensor ID |

| Eventual I/O elements (generate and send record to server only if appropriate conditions are met) | | |
|---|---|---|
| Nr. | Property Name | Description |
| 26 | Geofence zone 01 | Event: 0 – target left zone, 1 – target entered zone |
| 27 | Geofence zone 02 | Event: 0 – target left zone, 1 – target entered zone |
| 28 | Geofence zone 03 | Event: 0 – target left zone, 1 – target entered zone |
| 29 | Geofence zone 04 | Event: 0 – target left zone, 1 – target entered zone |
| 30 | Geofence zone 05 | Event: 0 – target left zone, 1 – target entered zone |
| 31 | Auto Geofence | Event: 0 – target left zone, 1 – target entered zone |
| 32 | Trip | 1 – trip start, 0 – trip stop |
| 33 | Immobilizer | 1 – iButton connected |
| 34 | Authorized driving | 1 – authorized iButton connected |
| 35 | Green driving type | 1 – harsh acceleration, 2 – harsh braking, 3 – harsh cornering |
| 36 | Green driving value | Depending on green driving type: if harsh acceleration or braking – g*100 (value 123 -> 1.23g), if harsh cornering – degrees (value in radians) |
| 37 | Over Speeding | At over speeding start km/h, at over speeding end km/h |
| 38 | LVCAN Speed | Value in km/h, 0 – 250 km/h |
| 39 | LVCAN Accelerator pedal position | Value range: 0-100 % |
| 40 | LVCAN Total fuel used | Value range: 0- 99999999 liters*<br>"Total Fuel Used" is sent to server multiplied by 10. Example: if value was 150.5 liters, "1505" will be sent to server. |
| 41 | LVCAN Fuel level (liters) | Value range: 0-100 liters |
| 42 | LVCAN Engine RPM | Value range: 0-8200 rpm |
| 43 | LVCAN Vehicle distance | Value range: 0-2145000000 meters |
| 44 | LVCAN Fuel level (proc.) | Value range: 0-100 % |
| 45 | LVCAN Program number | Value range: 0-999 |
| 47 | LVC ModuleID | Value range: 0-max |
| 48 | LVC Engine Work Time | Value range: 0-4294967295 |
| 49 | LVC Engine Work Time (counted) | Value range: 0-4294967295 |
| 50 | LVC Total Mileage (counted) | Value range: 0-4294967295 |
| 51 | LVC Fuel Consumed (counted) | Value range: 0-4294967295 |
| 52 | LVC Fuel Rate | Value range: 0-4294967295 |
| 53 | LVC AdBlue Level (percent) | Value range: 0-4294967295 |
| 54 | LVC AdBlue Level (liters) | Value range: 0-255 |
| 55 | LVC Engine Load | Value range: 0-65535 |
| 56 | LVC Engine Temperature | Value range: 0-65535 |

| | | |
|---|---|---|
| 57 | LVC Axle 1 Load | Value range: 0-255 |
| 58 | LVC Axle 2 Load | Value range: 0-65535 |
| 59 | LVC Axle 3 Load | Value range: 0-65535 |
| 60 | LVC Axle 4 Load | Value range: 0-255 |
| 61 | LVC Axle 5 Load | Value range: 0-65535 |
| 62 | LVC Control State Flags | Value range: 0-255 |
| 63 | LVC Agricultural Machinery Flags | Value range: 0-255 |
| 64 | LVC Harvesting Time | Value range: 0-65535 |
| 65 | LVC Area of Harvest | Value range: 0-65535 |
| 66 | LVC Mowing Efficiency | Value range: 0-65535 |
| 67 | LVC Grain Mown Volume | Value range: 0-65535 |
| 68 | LVC Grain Moisture | Value range: 0-65535 |
| 69 | LVC Harvesting Drum RPM | Value range: 0-4294967295 |
| 70 | LVC Gap Under Harvesting Drum | Value range: 0-max |
| 71 | LVC Security State Flags | Value range: 0-4294967295 |
| 72 | LVC Tacho Total Vehicle Distance | Value range: 0-4294967295 |
| 73 | LVC Trip Distance | Value range: 0-4294967295 |
| 74 | LVC Tacho Vehicle Speed | Value range: 0-4294967295 |
| 75 | LVC Tacho Driver Card Presence | Value range: 0-65535 |
| 76 | LVC Driver1 States | Value range: 0-65535 |
| 77 | LVC Driver2 States | Value range: 0-255 |
| 78 | LVC Driver1 Continuous Driving Time | Value range: 0-max |
| 79 | LVC Driver2 Continuous Driving Time | Value range: 0-4294967295 |
| 80 | LVC Driver1 Cumulative Break Time | Value range: 0-4294967295 |
| 81 | LVC Driver2 Cumulative Break Time | Value range: 0-65535 |
| 82 | LVC Driver1 Duration Of Selected Acti | Value range: 0-255 |
| 83 | LVC Driver2 Duration Of Selected Acti | Value range: 0-255 |
| 84 | LVC Driver1 Cumulative Driving Time | Value range: 0-255 |
| 85 | LVC Driver2 Cumulative Driving Time | Value range: 0-65535 |
| 86 | LVC Driver1 ID High | Value range: 0-65535 |

| | | |
|---|---|---|
| 87 | LVC Driver1 ID Low | Value range: 0-65535 |
| 88 | LVC Driver2 ID High | Value range: 0-65535 |
| 89 | LVC Driver2 ID Low | Value range: 0-65535 |
| 90 | LVC Battery Temperature | Value range: 0-65535 |
| 91 | LVC Battery Level (percent) | Value range: 0-65535 |

**There are two types of operations with Permanent I/O elements: simple monitoring and event generating. Monitoring method is used when current I/O information needed with regular GNSS coordinates. Event generating method is used when additional AVL packet is needed when current value of I/O exceeds predefined High and Low levels. I/O settings allow defining I/O event criteria**.

**Figure 48. I/O settings**

Enabled or disabled field – allows enabling I/O element so it is added to the data packet and is sent to the server. By default all I/O element are disabled and FM3602/FM3612 records only GNSS coordinates.

Priority (AVL packet priority) can be low, high or panic. Regular packets are sent as Low priority records. When low priority event is triggered, FM3602/FM3612 makes additional record with indication that the reason for that was I/O element change. When High priority is selected, module makes additional record with high priority flag and sends event packet immediately to the server by GPRS. Panic priority triggers same actions as high priority, but if GPRS fails, it sends AVL packet using SMS mode if SMS is **enabled in SMS settings**.

High and Low levels – define I/O value range. If I/O value enters or exits this range, FM3602/FM3612 generates event. “Generate event” parameter defines when to generate event – when value enters defined range, exits it or both.

Averaging constant – it is an I/O event delay parameter. In some applications there is no need to generate events on every I/O range enter/exit immediately. Sometimes it is necessary to wait some time interval before event generating. Averaging constant allows setting I/O event delay (averaging). If I/O value is entering or leaving predefined range, it must have same value for Averaging constant time. 1 Averaging constant value equals about 30 miliseconds. In Deep Sleep mode there is no Averaging.

**Note: I/O element's "Movement sensor" Averaging constant is interpreted as Start Move Timeout in seconds (from 1 to 59).**
**Start Move Timeout – is a time interval required for movement sensor to be in the moving state, to consider vehicle as moving.**

### 5.15.1 Monitoring

I/O monitoring starts after enabling I/O element and setting up I/O parameters as it is shown below:

**Figure 49. I/O settings**

### 5.15.2 Event Generating

Events happen when the value of enabled I/O intersects thresholds (enter, exit or on both) predefined by High and Low level thresholds. Table below defines all available values of I/O settings.

| Setting | Value |
|---|---|
| Priority | low, high |
| High level | maximum threshold |
| Low level | minimum threshold |
| Generate event | on interval enter, on interval exit, on both enter and exit |
| Average constant | $1 – 2^{32}$ (4 Bytes) |

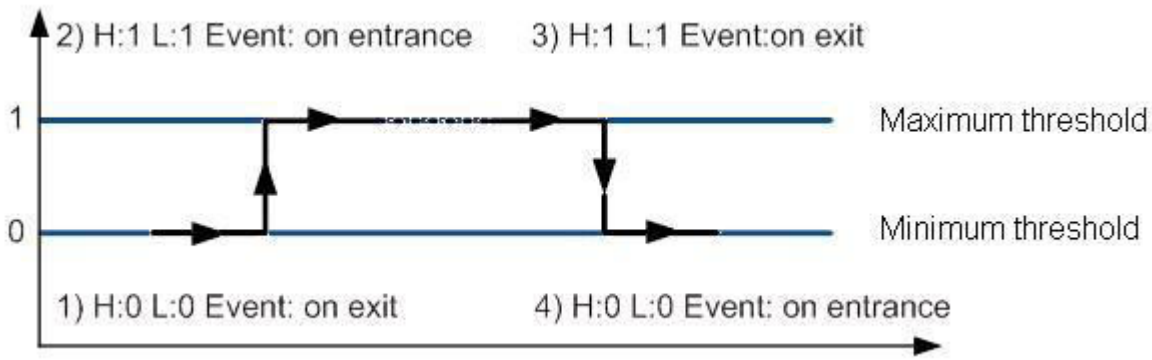


**Figure 50. Digital Input event generation example**

### 5.15.3 Hysteresis

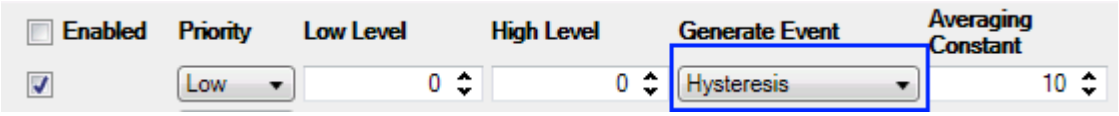


**Figure 51. Hysteresis parameter configuration**

I/O elements can generate events according to hysteresis algorithm. If I/O event operand "Hysteresis" is selected, events will be generated as it is shown in the illustration below (I/O speed is taken as I/O value example):

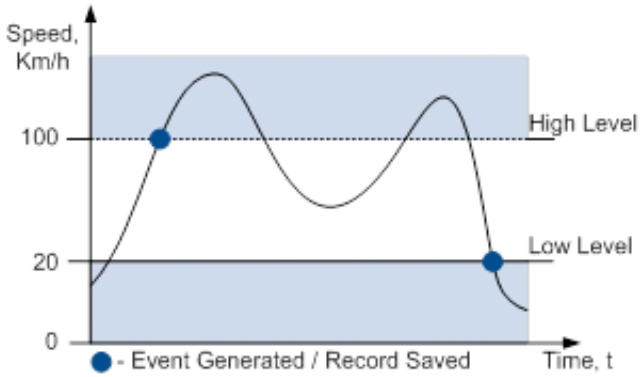


**Figure 52. Event generation according hysteresis algorithm**

# 6 SMS COMMAND LIST

Read chapter 5.11 to know how to construct a proper SMS message and send it to FM3602/FM3612 device. All commands are case sensitive. While FM3602/FM3612 operates in Deep Sleep mode and user tries to send SMS message it cannot arrive to FM3602/FM3612 device, because GSM/GPRS module is disabled most of the time (wake up depends on Send Period parameter). FM3602/FM3612 will receive the SMS when it wakes up (exits deep sleep mode).

## 6.1 SMS command list

| Command | Description | Response |
|---|---|---|
| getstatus | Modem Status information | Yes |
| getweektime | Current device time, Day of Week and amount of minutes passed since start of week | Yes |
| getops | List of currently available GSM operator | Yes |
| getcfgtime | Date and Time of last successful configuration | Yes |
| ggps | Google Map Link information | Yes |
| getgps | Current GPS data and time | Yes |
| cpureset | Reset CPU | No |
| resetprof | Reset all FLASH1 profile configuration to default profile | No |
| getver | Device / Modem / Code version information | Yes |
| getinfo | Device runtime system information | Yes |
| deleterecords | Delete all records saved on FLASH | No |
| getio | Readout digital inputs and outputs | Yes |
| readio # | Readout digital input value according entered ID, # - ID | Yes |

| | | |
|---|---|---|
| | value | |
| setdigout ## Y1 Y2 | set digital outputs<br>0 – OFF, 1 – ON<br>Y1 – timeout for DO1<br>Y2 – timeout for DO2 | Yes |
| getparam # | Readout parameter value according entered ID.<br># - ID value. | Yes |
| setparam # # | Set parameter value according entered ID and Value.<br>1.# - ID value.<br>2.# - New Parameter Value | Yes |
| getparam 1271 X | X values can be 1, 2, 3 | Yes |
| flush #,#,#,#,#,#,# | Initiates all data sending to specified target server<br>1.# - IMEI<br>2.# - APN<br>3.# - LOGIN<br>4.# - PASS<br>5.# - IP<br>6.# - PORT<br>7.# - MODE (0-TCP/1-UDP) | No |
| readops # | 1 – send first 20 operator codes, 2 – send from 21st to 40th operator codes, 3 – send all other operator codes | |
| sn # | Static navigation, 1 – enable, 0 – disable | Yes |
| banlist | Banned operators information | Yes |
| crashlog | Device last information before unexpected reset | Yes |
| delete_all_sms | Deletes all SMS | No |
| lvcangetprog | CAN Program Number request by SMS | Yes |
| lvcansetprog # | Set LVCAN program number | Yes |
| lvcangetinfo | Get LV-CAN info by SMS | Yes |

### 6.1.1 getstatus

| Response details | Description |
|---|---|
| Data Link | Indicate module connection to server at the moment: 0 – Not connected, 1 – connected |
| GPRS | Indicate if GPRS is available at the moment |
| Phone | Voice Call status: 0 – ready, 1 – unavailable, 2 – unknown, 3 – ringing, 4 – call in progress, 5 – asleep |
| SIM | SIM Status: 0 – ready, 1 – pin, 2 – puk, 3 – pin2, 4 – puk2 |
| OP | Connected to GSM Operator: numerical id of operator |
| Signal | GSM Signal Quality [0-5] |
| NewSMS | Indicate if new message received |
| Roaming | 0 – Home Network, 1 – roaming |
| SMSFull | SMS storage is full? 0 – ok, 1 – SMS storage full |
| LAC | GSM Tower Location Area Code |
| Cell ID | GSM Tower Cell ID Code |

Example: Data Link: 0 GPRS: 1 Phone: 0 SIM: 0 OP: 24602 Signal: 5 NewSMS: 0 Roaming: 0 SMSFull: 0 LAC: 1 Cell ID: 864

### 6.1.2 getweektime

| Response details | Description |
|---|---|
| Clock Sync | Indicates system clock synchronization status. 0 – System is not synchronized, 1 – System synchronized |
| DOW | Day Of Week – indicates current day of week starting from 1 – Monday, 2 – Tuesday, etc. |
| Time | Indicates current GMT time |
| WeekTime | Indicates time in minutes starting from Monday 00:00 GMT |

Example: Clock Sync: 1 DOW: 4 Time 12:58 Weektime: 6538

### 6.1.3 getops

| Response details | Description |
|---|---|
| LIST | Returns list of current available allowed operators. |

Example: (2,”LT BITE GSM”,”BITE”,”24602”),(3,”TELE2”,”TELE2”,”24603”)

### 6.1.4 getcfgtime

| Response details | Description |
|---|---|
| Date/Time | Returns last performed configuration date and time. |

Example: Last Configuration was performed on: 2010.4.15 5:45:19

### 6.1.5 getgps

| Response details | Description |
|---|---|
| Gps | Indicates valid (1) or invalid (0) Gps data |
| Sat | Count of currently available satellites |
| Lat | Latitude (Last good Latitude) |
| Long | Longitude (Last good Longitude) |
| Alt | Altitude |
| Speed | Ground speed, km/h |
| Dir | Ground direction, degrees |
| Date | Current date |
| Time | Current GMT time |

Example: GPS:1 Sat:7 Lat:54.71473 Long:25.30304 Alt:147 Speed:0 Dir:77 Date: 2007/8/24 Time: 13:4:36

### 6.1.6 ggps

| Response details | Description |
|---|---|
| D | Date |
| T | Time |
| S | Actual Speed |
| C | Latitude (Last good Latitude), Longitude (Last good Longitude) |
| Url | Google Maps Link |

Example: D:2013/7/4 T:0:0:0 S:0 C:0, 0 Url: http://maps.google.com/?q=0,0&om=1speed:0

### 6.1.7 getver

| Response details | Description |
|---|---|
| Code Ver | Firmware version |
| Device IMEI | IMEI |
| Device ID | Device ID is used to detect by server which type of configuration to load |
| Bootloader Ver | Bootloader Version |
| Modem App Ver | Version of modem application |
| Revision | Firmware revision |

Example: Code Ver:01.06.15 Rev:1 Device IMEI:353976010139156 Device ID:000001 Bootloader Ver: 01.09 Modem APP Ver:TM11Q_R_01.00.03.03_002

### 6.1.8 getinfo

| Response details | Description |
|---|---|
| INI | Device Initialization Time |
| RTC | RTC Time |
| RST | Restart Counter |
| ERR | Error Counter |
| SR | Number of Sent Records |
| BR | Number of broken records |
| CF | Profile CRC Fail counter |
| FG | Failed GPRS counter |
| FL | Failed link counter |
| UT | UPD Timeout counter |
| SMS | Sent SMS Counter |
| NOGPS | No GPS Timer |
| GPS | GPS receiver state. 0 – OFF, 1 – restarting, 2 – ON but no fix, 3 – ON and operational, 4 – sleep mode |
| SAT | Average satellites |
| RS | Reset Source Identification<br>1 – Low Power, 2 – W Watchdog, 3 – I Watchdog, 4 – Software reset, 5 – Power On, 6 – Pin Reset |
| MD | Data Mode state. 0 – Home and Stop, 1 – Home and Moving, 2 – Roaming and Stop, 3 – Roaming and Moving, 4 – Unknown and Stop, 5 – Unknown and Moving |
| RF | Records Found – number of records in the memory. |

Example: INI:2013/10/11 8:44 RTC:2013/10/11 8:59 RST:1 ERR:0 SR:0 BR:0 CF:0 FG:0 FL:0 UT:0 SMS:1 NOGPS:0:14 GPS:2 SAT:0 RS:3 MD:4 RF:0

### 6.1.9 getio

| Response details | Description |
|---|---|
| DI# | Digital Input state |
| AIN# | Analog Input state |
| DO# | Digital Output state |

Example: DI1:0 DI2:0 DI3:0 AIN:0.0611 DO1:0 DO2:0

### 6.1.10 readio #

| Response details | Description |
|---|---|
| ID | I/O element ID |
| Value | I/O Element value |

Example: I/O ID:3 Value:0

#### 6.1.11 setdigout ## Y1 Y2

Sets digital outputs to ON or OFF state (for some time if needed). Value is written as a row for OUT1 and OUT2 values.

Example: 'setdigout 01 0 5' will set OUT2 to high level for 5 seconds, while OUT1 to low level.

To ignore one digital output value and make ON/OFF state only to another digital output in place of 0 or 1 values, "?" must be used.

Example: 'setdigout ?1' will set OUT2 to high level for indefinite period of time while OUT1 remains as it was set before.

#### 6.1.12 getparam ####

Read parameter value. ID consists of 3 or 4 digits. Detailed list of parameters and IDs can be found in chapter number 8 "Parameter List"

Example: 'getparam 1245' command will request server IP address.

#### 6.1.13 setparam ####

Sets new value for parameter. ID consists of 3 or 4 digits. Detailed list of parameters and IDs can be found in chapter number 8 "Parameter List"

Example: 'setparam 1245 127.0.0.1' will change configured IP address.

#### 6.1.13. getparam 1271 X/212 X

X values can be 1,2,3.

If X = 1, Operator codes from 0-19 are read from configuration and sent via SMS.
If X = 2, Operator codes from 20-39 are read from configuration and sent via SMS.
If X = 3, Operator codes from 40-49 are read from configuration and sent via SMS.
If X = any other, Operator codes from 0-19 are read from configuration and sent via SMS.

#### 6.1.14. setparam 1271 X/212 X

If X is from 0 to 49, X means index of operator code which has to be configured. Up to 20 operator codes may be configured in 1 SMS. Example: *Setparam 1271 16 24602,24603,24605* ,here 16$^{th}$, 17$^{th}$ and 18$^{th}$ operator codes are set. Note! Other operator codes are left unchanged in the configuration.

#### 6.1.15 readops #

Send from device Operator List.

1 – send first 20 operator codes, 2 – send from 21$^{st}$ to 40$^{th}$ operator codes, 3 – send all other operator codes.

#### 6.1.16 flush #,#,#,#,#,#,#

Initiates all data sending by GPRS to specified target server. Comma separated parameters go as numbered:

1.# - IMEI
2.# - APN
3.# - GPRS LOGIN
4.# - GPRS PASSWORD
5.# - IP
6.# - PORT

7.# - MODE (0-TCP/1-UDP)

Parameters are separated by comma (no spaces needed). In case you don't need to enter parameter (Login/Pass) – do not put space, simply put comma and write next parameter.

Example: opa opa flush 353976012555151,banga,,,212.47.99.62,12050,0

| Response details | Description |
|---|---|
| FLUSH SMS Accepted | FLUSH SMS Accepted |
| # records found on FLASH | Number of records found on FLASH |
| Minimum Records to Send: # | Number of minimum saved records to send |
| GPRS Enabled: # | State of the GPRS connection, 0 – disabled; 1 – enabled |
| Time Sync: # | Indicates time synchronization on the device, 0 – not synchronized; 1 – synchronized |

Example: FLUSH SMS Accepted. 11 records found on FLASH. Minimum Records to Send: 1. GPRS Enabled: 1. Time Sync: 1.

#### 6.1.17 sn #

Enables or disables Static navigation. 1 – enable, 0 – disable.

#### 6.1.18 banlist

Gives a list of all banned operators.

Example when no operators are banned: 0000.00s.0.000

#### 6.1.19 crashlog

Gives the last information before the device has crashed for unexpected reasons. It is useful when the device acts unexpectedly or restars for unexplained reasons.

Example if no unexpected reset: "Crash: "

Example if unexpected reset was detected: "Crash: 3051,3052,3053".

#### 6.1.20 lvcangetprog

CAN program number can be obtained via SMS:

SMS Text: "lvcangetprog"

Response: "CAN Program Nr: XXXX"

#### 6.1.21 lvcansetprog #

Set LV-CAN program number via SMS:

SMS Text: "lvcansetprog 139"

Response: "CAN program Nr:139"

#### 6.1.22 lvcangetinfo

Get LV-CAN info by SMS

Full LV-CAN information via SMS:

SMS Text: "  lvcangetinfo"

Response: "

Prog: 139

SWRevison: 6
KernVer: 10
KernVar: 49
MdlID: 8884443332221110”

# 7 Debug mode

FM3602/FM3612 is able to transmit its current state when connected to PC using USB cable. It is used to detect errors and provide information to possible solutions when operating as unexpected. Download Terminal from:
http://avl1.teltonika.lt/Downloads/Software/Terminal.zip.

After launching terminal choose baud rate 115200 and hardware control – none. Select COM port which is assigned to “Virtual COM Port”. Click on ‘Start Log’ button and save a new file. Then click ‘Connect’ to start receiving messages from FM36X2.

Also you can log NMEA data directly. To get NMEA data, simply enter the following command into the command field: **.log_nmea:1$0a**.

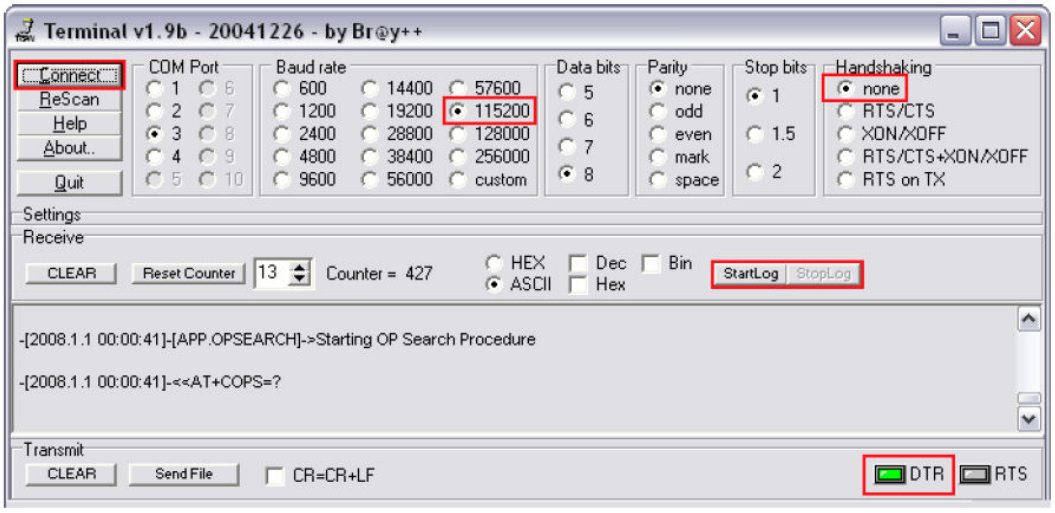


**Figure 53. Terminal window for logging**

# 8 Parameter List

## 8.1 Parameters value types

S8 – Signed Char
S8[*n*] – String of *n* Char
U8 – Unsigned Char
U16 – Unsigned Short
S32 – Signed Integer
U32 – Unsigned Integer
U64 – Unsigned Long Long Integer

## 8.2 System parameters

### 8.2.1 Sleep Mode (ID=1000)

Device has two sleep modes: sleep and deep sleep mode. While sleep is disabled (value 0) module will never enter sleep mode, in sleep mode (value 1) module reduces level of power usage by turning GNSS module to sleep, in deep sleep mode (value 2) module turns GNSS module to sleep and switch GSM module off (note, that FM3602/FM3612 do not receive SMS while in deep sleep).

| Minimum value | Maximum value | Recommended value | Goes with (depends on) parameters | Value type |
|---|---|---|---|---|
| 0 | 2 | - | | U8 |

### 8.2.2 Sleep timeout (ID=200)

Sleep timeout is time after which FM3602/FM3612 goes to sleep or deep sleep if other requirements are met. It is measured in minutes.

| Minimum value | Maximum value | Recommended value | Goes with (depends on) parameters | Value type |
|---|---|---|---|---|
| 1 | 3000 | - | | U8 |

### 8.2.3 Analog Input value range (ID=1001)

Analog input measuring resolution and range can be defined as 0…10V (value 0) or 1…30V (value 1).

| Minimum value | Maximum value | Recommended value | Goes with (depends on) parameters | Value type |
|---|---|---|---|---|
| 0 | 1 | - | | U8 |

### 8.2.4 Stop Detection Source (ID=1002)

Device can operate and change its working mode according to motion detection source: ignition (value 0), movement sensor (value 1), GPS (value 2).

| Minimum value | Maximum value | Recommended value | Goes with (depends on) parameters | Value type |
|---|---|---|---|---|
| 0 | 2 | - | | U8 |

### 8.2.5 Static Navigation (ID=1003)

When static navigation is enabled, FM3602/FM3612 filters out GPS jumps, when it is not moving. When it is disabled, it does not make any changes to collected GPS data.

| Minimum value | Maximum value | Recommended value | Goes with (depends on) parameters | Value type |
|---|---|---|---|---|
| 0 | 1 | 1 | | U8 |

### 8.2.6 Ignition Source (ID=1004)

Ignition Source sets ignition triggered functionalities.

| Parameter | ID | Value |
|---|---|---|
| Ignition Source | 1004 | 0 (By Power Voltage – default) |
| | | 1 (By Ignition Din1) |
| | | 2 (By Movement sensor) |
| High Voltage Level* | 1005 | Min: 0, Max: 30000 (mV) |
| Low Voltage Level* | 1006 | Min: 0, Max: 30000 (mV) |

* - used when External voltage selected as ignition source.

### 8.2.7 Ignition Detection(ID=1008)

This parameter defines ignition detection.

Manual – ignition detection is by parameters set by user(13-30V)

Automatic – ignition is detected by device:

Power voltage(12V) – ignition on 13.2 – 30

Power voltage (24V) – ignition on 27 – 30

| Parameter | ID | Value |
|---|---|---|
| Ignition Source | 1008 | 0 – Manual |
| | | 1 – Automatic |

### 8.2.8 Ignition Detection Timeout(ID=1009)

This parameter defines time, in which Power Voltage can be lower than set value.

For example, Power Voltage drops from 14V to 12V for 5 seconds(timeout is set to 10) device will not detect “ignition off” state.

| Minimum value | Maximum value | Recommended value | Goes with (depends on) parameters | Value type |
|---|---|---|---|---|
| 0 | 65535 | 10 | | U8 |

### 8.2.9 GNSS FIX Timeout for Time Synchronization via NTP (ID=1007)

If “GNSS FIX Timeout” is set too 60s (default value) and during this time GPS FIX is received – use default (GNSS) time synchronization method. However if the GPS time FIX is not received: a. FM is going to get time using NTP server. Device will activate GPRS context and create UDP connection to destination port 123 using SNTP protocol.

| Minimum value | Maximum value | Recommended value | Goes with (depends on) parameters | Value type |
|---|---|---|---|---|
| 0 | 65535 | 60 | | U8 |

#### 8.2.10 Saving/Sending without time synchronization (ID=201)

When this feature is enabled (value = 1), then records can be saved and sent to server without time synchronization.

| Minimum value | Maximum value | Recommended value | Goes with (depends on) parameters | Value type |
|---|---|---|---|---|
| 0 | 1 | 1 | | U8 |

#### 8.2.11 GNSS System (ID=202)

This parameter sets Satellite System, available values: 0 – GNSS (all available); 1 – GPS only; 2 – GLONASS only.

| Minimum value | Maximum value | Recommended value | Goes with (depends on) parameters | Value type |
|---|---|---|---|---|
| 0 | 2 | 0 | | U8 |

### 8.3 Records parameters

#### 8.3.1 Sorting (ID=1010)

Record sorting parameter is responsible for record sorting order. Value of 0 arranging data starting from newest, while value of 1 arranging data starting from oldest.

| Minimum value | Maximum value | Recommended value | Goes with (depends on) parameters | Value type |
|---|---|---|---|---|
| 0 | 1 | - | | U8 |

#### 8.3.2 Active Data Link Timeout (ID=1011)

Defines for how many seconds device will keep connection to the server after successful data transfer while waiting for a new record.

| Minimum value | Maximum value | Recommended value | Goes with (depends on) parameters | Value type |
|---|---|---|---|---|
| 0 | 259200 | - | | U32 |

#### 8.3.3 Server Response Timeout (ID=1012)

Defines time period (in seconds) for server response to sent records.

| Minimum value | Maximum value | Recommended value | Goes with (depends on) parameters | Value type |
|---|---|---|---|---|
| 1 | 300 | - | | U8 |

ATTENTION! Some GSM operators may disconnect the device from an active data link if the device doesn't send any data for a very long time, even if active data link timeout is set to maximum value. The amount of time that an operator keeps the link open depends solely on the operator. For example, if active data link timeout is set to maximum, 259200 seconds (72 hours), and the

device sends data to server every 86400 seconds (24 hours), the operator might disconnect the link earlier and the device will have to connect to the server anew. This may cost extra, depending on the operator GPRS data charge. It is strongly recommended, when using active data link timeout, that data sending to the server should not be very rare (24 hours or more). If data sending is more frequent, then the operator will not disconnect the device form the server.

## 8.4 GSM parameters

### 8.4.1 GPRS content activation (ID=1240)

Parameter allows or does not allow GPRS usage. If GPRS is not allowed value is 0, if GPRS is allowed value is 1.

| Minimum value | Maximum value | Recommended value | Goes with (depends on) parameters | Value type |
|---|---|---|---|---|
| 0 | 1 | - | **APN Name (ID=1242)**<br>**APN username (ID=1243)**<br>**APN Password (ID=1244)** | S8 |

### 8.4.2 APN Name (ID=1242)

Parameter defines GPRS Access Point Name.

| Minimum value | Maximum value | Recommended value | Goes with (depends on) parameters | Value type |
|---|---|---|---|---|
| Empty | 32 char string | - | **GPRS content activation (ID=1240)**<br>**APN username (ID=1243)**<br>**APN Password (ID=1244)** | S8[32] |

### 8.4.3 APN username (ID=1243)

Parameter defines APN username. In case operator does not use username for login, value should be empty.

| Minimum value | Maximum value | Recommended value | Goes with (depends on) parameters | Value type |
|---|---|---|---|---|
| Empty | 30 char string | - | **GPRS content activation (ID=1240)**<br>**APN Name (ID=1242)**<br>**APN Password (ID=1244)** | S8[30] |

### 8.4.4 APN Password (ID=1244)

Parameter defines APN password. In case operator does not use password for login, value should be empty.

| Minimum value | Maximum value | Recommended value | Goes with (depends on) parameters | Value type |
|---|---|---|---|---|
| Empty | 30 char string | - | **GPRS content activation (ID=1240)**<br>**APN Name (ID=1242)**<br>**APN username (ID=1243)** | S8[30] |

### 8.4.5 Domain (ID=1245)

Parameter defines AVL data destination server IP address. Example: 212.47.99.62

| Minimum value | Maximum value | Recommended value | Goes with (depends on) parameters | Value type |
|---|---|---|---|---|
| 0 | 31 char string | - | **GPRS content activation (ID=1240)**<br>**Target Server Port (ID=1246)** | S8[16] |

#### 8.4.6 Target Server Port (ID=1246)

Parameter defines AVL data destination server port number. Example: 12050

| Minimum value | Maximum value | Recommended value | Goes with (depends on) parameters | Value type |
|---|---|---|---|---|
| Empty | 65535 | - | **GPRS content activation (ID=1240)**<br>**Domain (ID=1245)** | U16 |

#### 8.4.7 Protocol (ID=1247)

Parameter defines GPRS data transport protocol. Module can use TCP or UDP transport protocol to send data to server. For TCP protocol value is 0, for UDP protocol value is 1.

| Minimum value | Maximum value | Recommended value | Goes with (depends on) parameters | Value type |
|---|---|---|---|---|
| 0 | 1 | - | **GPRS content activation (ID=1240)** | U8 |

#### 8.4.8 Use 2G only (ID=1248)

User can choose if device will work only in GSM network, or it will prefer 3G network and switch to GSM only then 3G is absent. To work only with 2G network value is 1, to work with both networks value is 0.

| Minimum value | Maximum value | Recommended value | Goes with (depends on) parameters | Value type |
|---|---|---|---|---|
| 0 | 1 | 0 | **GPRS content activation (ID=1240)** | U8 |

#### 8.4.9 SMS Login (ID=1252)

User login is used to ensure module security. Used in every SMS that is sent to device. Example: ba321

| Minimum value | Maximum value | Recommended value | Goes with (depends on) parameters | Value type |
|---|---|---|---|---|
| Empty | 5 char | - | **SMS Password (ID=1253)** | S8[5] |

#### 8.4.10 SMS Password (ID=1253)

User password is used to ensure module security. Used in every SMS that is sent to device. Example: ab123

| Minimum value | Maximum value | Recommended value | Goes with (depends on) parameters | Value type |
|---|---|---|---|---|
| Empty | 5 char | - | | S8[5] |

#### 8.4.11 SMS Time Zone (ID=1254)

Parameter allows to choose from all UTC Time lines for SMS data sending. This parameter unit is minutes and value increment/decrement step is 15 min. (0, 15, 30…).

| Minimum value | Maximum value | Recommended value | Goes with (depends on) parameters | Value type |
|---|---|---|---|---|
| -720 | +840 | 0 | **SMS Data send week time** schedule (ID=1273) | U8 |

#### 8.4.12 SMS data sending settings (ID=1250)

Parameter allows or does not allow sending AVL data using binary SMS. If SMS use is not allowed value is 0 and 1 if SMS use is allowed.

| Minimum value | Maximum value | Recommended value | Goes with (depends on) parameters | Value type |
|---|---|---|---|---|
| 0 | 1 | - | **SMS Data send week time schedule (ID=1273)** | S8 |

#### 8.4.13 SMS Data send week time schedule (ID=1273)

Parameter defines SMS data sending according to week time schedule. This parameter is used to set data sending on selected week days and hours. Minimum time step is 10 minutes.

Example value: 7F,FF,FF,FF,FF,FF,FF,FF,FF,FF,FF,FF,FF,FF,FF,FF,FF,FF,FF,FF

For more information *read 8.5.1.4 "Schedule parameter format".*

#### 8.4.14 Authorized phone numbers (ID=1260-1269)

If at least one number is entered then only those number can send messages to device. Number must be entered without "+" or "00".

Example: 37060012346

| Minimum value | Maximum value | Recommended value | Goes with (depends on) parameters | Value type |
|---|---|---|---|---|
| 1 digit | 16 digits | - | | S8[17] |

*If SMS data sending is enabled (ID=1250) first value in a list is server GSM number. The SMS with 24 coordinates is sent to this number.*

**Deleting Authorized phone numbers:** do no write any value is configuration SMS command.

Example: setparam 1260

#### 8.4.15 SMS Event PreDefined Numbers (ID=5000-5009)

In this field are written GSM numbers, to which will be sent "Event SMS" text message. Number must be entered without "+" or "00".

Example: 37060012346

| Minimum value | Maximum value | Recommended value | Goes with (depends on) parameters | Value type |
|---|---|---|---|---|
| 1 digit | 16 digits | - | | S8[17] |

#### 8.4.16 Operator List (ID=1271 X)

Parameter defines operator list. According to this list module selects operating profile. GSM operator codes are comma separated. First in a list is *Home Operator Code*, then Preferred Roaming Operator Codes are written.

X defines starting position that is changed: If X is from 0 to 49, X means index of operator code which has to be configured. Up to 20 operator codes may be configured in 1 SMS. Example: *setparam 1271 16 24602,24603,24605*

Here 16th, 17th and 18th operator codes are set. Note! Other operator codes are left unchanged in the configuration.

| Minimum value | Maximum value | Recommended value | Goes with (depends on) parameters | Value type |
|---|---|---|---|---|
| Empty | 7 digits | - | | U32 |

## 8.5 Data Acquisition Modes parameters

### 8.5.1 Home Network GSM operator code "Vehicle on STOP" parameters

#### 8.5.1.1 Min Period (ID=1540)

This parameter indicates time interval in seconds in order to acquire new record. If value is 0 it means no records by min period will be saved.

| Minimum value | Maximum value | Recommended value | Goes with (depends on) parameters | Value type |
|---|---|---|---|---|
| 0 | 2592000 | - | | U32 |

#### 8.5.1.2 Min Saved Records (ID=1543)

This parameter defines minimum number of records in one data packet that can be sent to server. It has higher priority than Data Send Period (ID=1544).

| Minimum value | Maximum value | Recommended value | Goes with (depends on) parameters | Value type |
|---|---|---|---|---|
| 1 | 255 | 1 | **GPRS Week Time (ID=1545)** | U8 |

#### 8.5.1.3 Send Period (ID=1544)

This parameter indicates frequency (time interval in seconds) of sending data to server.

| Minimum value | Maximum value | Recommended value | Goes with (depends on) parameters | Value type |
|---|---|---|---|---|
| 0 | 2592000 | - | **Min Saved Records (ID=1543)**<br>**GPRS Week Time (ID=1545)** | U32 |

#### 8.5.1.4 GPRS Week Time (ID=1545)

This parameter manages when it is allowed to open GPRS context. When module starts it is prohibited to open the context. When modem's GPRS context is closing (for example changing network) it is allowed to open it only at a defined time. It is possible to allow connections every 10 minutes up to once per day.

Example value: 7F,FF,FF,FF,FF,FF,FF,FF,FF,FF,FF,FF,FF,FF,FF,FF,FF,FF,FF,FF

***Schedule parameter format:***

Time is defined as 19 byte array ('getparam' 1545 returns 20 bytes). First byte of array defines week days; the rest 18 bytes define timestamps with 10 minute interval. In first byte, first bit (LSB) defines if module should connect to GPRS (send SMS) on Monday, second bit – on Tuesday and so on up to seventh bit – which means Sunday. Eighth bit (MSB) is not used. If bits value is 0 then device is not allowed to open GPRS context, but if it is already open – does not close it. If value is 1 it will work as day minutes are defined in rest of the bytes. Day's minutes are

defined by 18 bytes (144 bits). Every $n^{th}$ bit (beginning from the first bit (LSB) and ending 18 bytes $8^{th}$ bit (MSB)) indicates every $10^{th}$ minute of the day (day has 1440 minutes).

Sample: GPRS will be allowed on Monday to Friday at 8:00 and 16:00 GMT. The following value should be configured:

00011111 00000000 00000000 00000000 000000000 00000000 00000000 00000001 00000000 00000000 00000000 00000000 00000000 000000001 00000000 00000000 00000000 00000000 00000000

Red bits indicate that GPRS will be allowed every day except Saturdays and Sundays. Blue bits indicate 480 and 720 minutes (480min = 8h and 720min = 16h). So the parameter value should be: 1F,00,00,00,00,00,00,01,00,00,00,00,00,01,00,00,00,00,00

It should be sent as UTF8 encoded string.

### 8.5.2 Home Network GSM operator code "Vehicle MOVING" parameters

#### 8.5.2.1 Min Period (ID=1550)

This parameter indicates time interval in seconds in order to acquire new record. If value is 0 it means no records by min period will be saved.

| Minimum value | Maximum value | Recommended value | Goes with (depends on) parameters | Value type |
|---|---|---|---|---|
| 0 | 2592000 | - | **Min Distance (ID=1551)**<br>**Min Angle (ID=1552)**<br>**Min Speed (ID=1556)**<br>**GPRS Week Time (ID=1555)** | U32 |

#### 8.5.2.2 Min Distance (ID=1551)

This parameter indicates distance in meters in order to acquire new record. Record is stored when the distance between previous records is greater than parameters value. If value is 0 it means no records by min distance will be saved.

| Minimum value | Maximum value | Recommended value | Goes with (depends on) parameters | Value type |
|---|---|---|---|---|
| 0 | 65535 | - | **Min Period (ID=1550)**<br>**Min Angle (ID=1552)**<br>**Min Speed (ID=1556)**<br>**GPRS Week Time (ID=1555)** | U32 |

#### 8.5.2.3 Min Angle (ID=1552)

This parameter indicates angle in degrees in order to acquire new record. If angle difference between last recorded coordinate and current position is greater than defined value, new record is stored. This parameter is operational, when speed is higher than 10km/h. If value is 0 it means no records by min angle will be saved.

| Minimum value | Maximum value | Recommended value | Goes with (depends on) parameters | Value type |
|---|---|---|---|---|
| 0 | 180 | - | **Min Period (ID=1550)**<br>**Min Distance (ID=1551)**<br>**Min Speed (ID=1556)**<br>**GPRS Week Time (ID=1555)** | U16 |

#### 8.5.2.4 Min Speed (ID=1556)

This parameter indicates speed difference in order to acquire new record. If speed difference between last recorded coordinate and current position is greater than defined value, new record is stored. If value is 0 it means no records by min distance will be saved.

| Minimum value | Maximum value | Recommended value | Goes with (depends on) parameters | Value type |
|---|---|---|---|---|
| 0 | 255 | 10 | **Min Period (ID=1550)**<br>**Min Distance (ID=1551)**<br>**Min Angle (ID=1552)**<br>**Min Speed Source (ID=1557)**<br>**GPRS Week Time (ID=1555)** | U16 |

#### 8.5.2.5 Min Speed Source (ID=1557)

This parameter defines Source for speed difference calculation: 0 – GPS, 1 – LVCAN

| Minimum value | Maximum value | Recommended value | Goes with (depends on) parameters | Value type |
|---|---|---|---|---|
| 0 | 1 | 0 | **Min Period (ID=1550)**<br>**Min Distance (ID=1551)**<br>**Min Angle (ID=1552)**<br><br>**Min Speed (ID=1556)**<br>**GPRS Week Time (ID=1555)** | U8 |

#### 8.5.2.6 Min Saved Records (ID=1553)

This parameter defines minimum number of records in one data packet that can be sent to server. It has higher priority than Data Send Period (ID=1554).

| Minimum value | Maximum value | Recommended value | Goes with (depends on) parameters | Value type |
|---|---|---|---|---|
| 1 | 255 | 1 | **Min Period (ID=1550)**<br>**Min Distance (ID=1551)**<br>**Min Angle (ID=1552)**<br>**Min Speed (ID=1556)**<br>**GPRS Week Time (ID=1555)** | U8 |

#### 8.5.2.7 Send Period (ID=1554)

This parameter indicates frequency (time interval in seconds) of sending data to server.

| Minimum value | Maximum value | Recommended value | Goes with (depends on) parameters | Value type |
|---|---|---|---|---|
| 0 | 2592000 | - | **GPRS Week Time (ID=1555)** | U32 |

#### 8.5.2.8 GPRS Week Time (ID=1555)

*Read 8.5.1.4.*

### 8.5.3 Roaming Network GSM operator code "Vehicle on STOP" parameters

#### 8.5.3.1 Min Period (ID=1560)

This parameter indicates time interval in seconds in order to acquire new record. If value is 0 it means no records by min period will be saved.

| Minimum value | Maximum value | Recommended value | Goes with (depends on) parameters | Value type |
|---|---|---|---|---|

| | | | | |
|---|---|---|---|---|
| 0 | 2592000 | - | | U32 |

#### 8.5.3.2 Min Saved Records (ID=1563)

This parameter defines minimum number of records in one data packet that can be sent to server. It has higher priority than Data Send Period (ID=1564).

| Minimum value | Maximum value | Recommended value | Goes with (depends on) parameters | Value type |
|---|---|---|---|---|
| 1 | 255 | 1 | **GPRS Week Time (ID=1565)** | U8 |

#### 8.5.3.3 Send Period (ID=1564)

This parameter indicates frequency (time interval in seconds) of sending data to server.

| Minimum value | Maximum value | Recommended value | Goes with (depends on) parameters | Value type |
|---|---|---|---|---|
| 0 | 2592000 | - | **Min Saved Records (ID=1563)**<br>**GPRS Week Time (ID=1565)** | U32 |

#### 8.5.3.4 GPRS Week Time (ID=1565)

*Read chapter 8.5.1.4.*

### 8.5.4 Roaming Network GSM operator code "Vehicle MOVING" parameters

#### 8.5.4.1 Min Period (ID=1570)

This parameter indicates time interval in seconds in order to acquire new record. If value is 0 it means no records by min period will be saved.

| Minimum value | Maximum value | Recommended value | Goes with (depends on) parameters | Value type |
|---|---|---|---|---|
| 0 | 2592000 | - | **Min Distance (ID=1571)**<br>**Min Angle (ID=1572)**<br>**Min Speed (ID=1576)**<br>**GPRS Week Time (ID=1575)** | U32 |

#### 8.5.4.2 Min Distance (ID=1571)

This parameter indicates distance in meters in order to acquire new record. Record is stored when the distance between previous records is greater than parameter's value. If value is 0 it means no records by min distance will be saved.

| Minimum value | Maximum value | Recommended value | Goes with (depends on) parameters | Value type |
|---|---|---|---|---|
| 0 | 65535 | - | **Min Period (ID=1570)**<br>**Min Angle (ID=1572)**<br>**Min Speed (ID=1576)**<br>**GPRS Week Time (ID=1575)** | U32 |

#### 8.5.4.3 Min Angle (ID=1572)

This parameter indicates angle in degrees in order to acquire new record. If angle difference between last recorded coordinate and current position is greater than defined value, new record is stored. This parameter is operational, when speed is higher than 10km/h. If value is 0 it means no records by min angle will be saved.

| Minimum value | Maximum value | Recommended value | Goes with (depends on) parameters | Value type |
|---|---|---|---|---|
| 0 | 180 | - | **Min Period (ID=1570)**<br>**Min Angle (ID=1572)**<br>**Min Speed (ID=1576)**<br>**GPRS Week Time (ID=1575)** | U16 |

#### 8.5.4.4 Min Speed (ID=1576)

This parameter indicates speed difference in order to acquire new record. If speed difference between last recorded coordinate and current position is greater than defined value, new record is stored. If value is 0 it means no records by min distance will be saved.

| Minimum value | Maximum value | Recommended value | Goes with (depends on) parameters | Value type |
|---|---|---|---|---|
| 0 | 255 | 10 | **Min Period (ID=1570)**<br>**Min Distance (ID=1571)**<br>**Min Angle (ID=1572)**<br>**Min Speed Source (ID=1577)**<br>**GPRS Week Time (ID=1575)** | U16 |

#### 8.5.4.5 Min Speed Source (ID=1577)

This parameter defines Source for speed difference calculation: 0 – GPS, 1 – LVCAN

| Minimum value | Maximum value | Recommended value | Goes with (depends on) parameters | Value type |
|---|---|---|---|---|
| 0 | 1 | 0 | **Min Period (ID=1570)**<br>**Min Distance (ID=1571)**<br>**Min Angle (ID=1572)**<br>**Min Speed (ID=1576)**<br>**GPRS Week Time (ID=1575)** | U8 |

#### 8.5.4.6 Min Saved Records (ID=1573)

This parameter defines minimum number of records in one data packet that can be sent to server. It has higher priority than Data Send Period (ID=1574).

| Minimum value | Maximum value | Recommended value | Goes with (depends on) parameters | Value type |
|---|---|---|---|---|
| 1 | 255 | 1 | **Min Period (ID=1570)**<br>**Min Distance (ID=1571)**<br>**Min Angle (ID=1572)**<br>**Min Speed (ID=1576)**<br>**GPRS Week Time (ID=1575)** | U8 |

#### 8.5.4.7 Send Period (ID=1574)

This parameter indicates frequency (time interval in seconds) of sending data to server.

| Minimum value | Maximum value | Recommended value | Goes with (depends on) parameters | Value type |
|---|---|---|---|---|
| 0 | 2592000 | - | **Min Saved Records (ID=1573)** | U32 |

| | | | | |
|---|---|---|---|---|
| | | | **GPRS Week Time (ID=1575)** | |

#### 8.5.4.8 GPRS Week Time (ID=1575)

**Read chapter 8.5.1.4.**

### 8.5.5 Unknown Network GSM operator code "Vehicle on STOP" parameters

#### 8.5.5.1 Min Period (ID=1580)

This parameter indicates time interval in seconds in order to acquire new record. If value is 0 it means no records by min period will be saved.

| Minimum value | Maximum value | Recommended value | Goes with (depends on) parameters | Value type |
|---|---|---|---|---|
| 0 | 2592000 | - | | U32 |

#### 8.5.5.2 Min Saved Records (ID=1583)

This parameter defines minimum number of records in one data packet that can be sent to server. It has higher priority than Data Send Period (ID=1584).

| Minimum value | Maximum value | Recommended value | Goes with (depends on) parameters | Value type |
|---|---|---|---|---|
| 1 | 255 | 1 | **GPRS Week Time (ID=1585)** | U8 |

#### 8.5.5.3 Send Period (ID=1584)

This parameter indicates frequency (time interval in seconds) of sending data to server.

| Minimum value | Maximum value | Recommended value | Goes with (depends on) parameters | Value type |
|---|---|---|---|---|
| 0 | 2592000 | - | **Min Saved Records (ID=1583)**<br>**GPRS Week Time (ID=1585)** | U32 |

#### 8.5.5.4 GPRS Week Time (ID=1585)

*Read chapter 8.5.1.4.*

### 8.5.6 Unknown Network GSM operator code "Vehicle MOVING" parameters

#### 8.5.6.1 Min Period (ID=1590)

This parameter indicates time interval in seconds in order to acquire new record. If value is 0 it means no records by min period will be saved.

| Minimum value | Maximum value | Recommended value | Goes with (depends on) parameters | Value type |
|---|---|---|---|---|
| 0 | 2592000 | - | **Min Distance (ID=1591)**<br>**Min Angle (ID=1592)**<br>**Min Speed (ID=1596)**<br>**Min Speed Source (ID=1597)**<br>**GPRS Week Time (ID=1595)** | U32 |

#### 8.5.6.2 Min Distance (ID=1591)

This parameter indicates distance in meters in order to acquire new record. Record is stored when the distance between previous records is greater than parameter's value. If value is 0 it means no records by min distance will be saved.

| Minimum value | Maximum value | Recommended value | Goes with (depends on) parameters | Value type |
|---|---|---|---|---|
| 0 | 65535 | - | **Min Period (ID=1590)**<br>**Min Angle (ID=1592)**<br>**Min Speed (ID=1596)**<br>**GPRS Week Time (ID=1595)** | U32 |

#### 8.5.6.3 Min Angle (ID=1592)

This parameter indicates angle in degrees in order to acquire new record. If angle difference between last recorded coordinate and current position is greater than defined value, new record is stored. This parameter is operational, when speed is higher than 10km/h. If value is 0 it means no records by min angle will be saved.

| Minimum value | Maximum value | Recommended value | Goes with (depends on) parameters | Value type |
|---|---|---|---|---|
| 0 | 180 | - | **Min Period (ID=1590)**<br>**Min Distance (ID=1591)**<br>**Min Speed (ID=1596)**<br>**GPRS Week Time (ID=1595)** | U16 |

#### 8.5.6.4 Min Speed (ID=1596)

This parameter indicates speed difference in order to acquire new record. If speed difference between last recorded coordinate and current position is greater than defined value, new record is stored. If value is 0 it means no records by min distance will be saved.

| Minimum value | Maximum value | Recommended value | Goes with (depends on) parameters | Value type |
|---|---|---|---|---|
| 0 | 255 | 1 | **Min Period (ID=1590)**<br>**Min Distance (ID=1591)**<br>**Min Angle (ID=1592)**<br>**Min Speed Source (ID=1597)**<br>**GPRS Week Time (ID=1595)** | U16 |

#### 8.5.6.5 Min Speed Source (ID=1597)

This parameter defines Source for speed difference calculation: 0 – GPS, 1 – LVCAN

| Minimum value | Maximum value | Recommended value | Goes with (depends on) parameters | Value type |
|---|---|---|---|---|
| 0 | 1 | 0 | **Min Period (ID=1590)**<br>**Min Distance (ID=1591)**<br>**Min Angle (ID=1592)**<br>**Min Speed (ID=1596)**<br>**GPRS Week Time (ID=1595)** | U8 |

#### 8.5.6.6 Min Saved Records (ID=1593)

This parameter defines minimum number of records in one data packet that can be sent to server. It has higher priority than Data Send Period (ID=1594).

| Minimum value | Maximum value | Recommended value | Goes with (depends on) parameters | Value type |
|---|---|---|---|---|

| | | | | |
|---|---|---|---|---|
| 1 | 255 | 1 | **Min Period (ID=1590)**<br>**Min Distance (ID=1591)**<br>**Min Angle (ID=1592)**<br>**Min Speed (ID=1596)**<br>**GPRS Week Time (ID=1595)** | U8 |

#### 8.5.6.7 Send Period (ID=1594)

This parameter indicates frequency (time interval in seconds) of sending data to server. In order to send data to server GPRS parameters must be enabled

| Minimum value | Maximum value | Recommended value | Goes with (depends on) parameters | Value type |
|---|---|---|---|---|
| 0 | 2592000 | - | **Min Saved Records (ID=1593)**<br>**GPRS Week Time (ID=1595)** | U32 |

#### 8.5.6.8 GPRS Week Time (ID=1595)

*Read chapter 8.5.1.4.*

## 8.6 Features Parameters

### 8.6.1 Green Driving scenario (ID=1600)

Green driving scenario can be enabled to work with 3 different ways: Dout not control scenario (value 1), Dout1 controls scenario (value 2), Dout2 controls scenario (value 3). To disable green driving scenario value 0 is used.

| Minimum value | Maximum value | Default value | Goes with (depends on) parameters | Value type |
|---|---|---|---|---|
| 0 | 3 | 0 | | U8 |

### 8.6.2 Max Acceleration Force (ID=1602)

It is max allowed acceleration force which can be reached while accelerating without triggering harsh acceleration event.

| Minimum value | Maximum value | Recommended value | Goes with (depends on) parameters | Value type |
|---|---|---|---|---|
| 0.25 | 0.85 | 0.25 | **Green Driving scenario (ID=1600)** | Float |

### 8.6.3 Max Braking Force (ID=1603)

It is max allowed braking force which can be reached while braking without triggering harsh braking event.

| Minimum value | Maximum value | Recommended value | Goes with (depends on) parameters | Value type |
|---|---|---|---|---|
| 0.25 | 0.85 | 0.35 | **Green Driving scenario (ID=1600)** | Float |

### 8.6.4 Max Cornering Force (ID=1604)

It is max allowed cornering angle which can be reached while cornering without triggering harsh cornering event.

| Minimum value | Maximum value | Recommended value | Goes with (depends on) parameters | Value type |
|---|---|---|---|---|

| | | | | |
|---|---|---|---|---|
| 0.1 | 1.0 | - | **Green Driving scenario (ID=1600)** | U16 |

#### 8.6.5 Max allowed Speed (ID=1605)

It is max allowed speed which can be reached. If this value exceeded Over speeding event will occur.

| Minimum value | Maximum value | Recommended value | Goes with (depends on) parameters | Value type |
|---|---|---|---|---|
| 0 | 260 | - | **Green Driving scenario (ID=1600)** | U16 |

#### 8.6.6 OverSpeeding scenario (ID=1601)

OverSpeeding scenario can be enabled to work with 3 different ways: Dout not control scenario (value 1), Dout1 controls scenario (value 2), Dout2 controls scenario (value 3). To disable OverSpeeding scenario value 0 is used.

| Minimum value | Maximum value | Default value | Goes with (depends on) parameters | Value type |
|---|---|---|---|---|
| 0 | 3 | 0 | | U8 |

#### 8.6.7 Jamming detection scenario (ID=1606)

Jamming detection scenario can be enabled to work with 3 different ways: Dout not control scenario (value 1), Dout1 controls scenario (value 2), Dout2 controls scenario (value 3). To disable Jamming detection scenario value 0 is used.

| Minimum value | Maximum value | Default value | Goes with (depends on) parameters | Value type |
|---|---|---|---|---|
| 0 | 3 | 0 | | U8 |

#### 8.6.8 Immobilizer scenario (ID=1607)

Immobilizer detection scenario can be enabled to work with 3 different ways: Dout not control scenario (value 1), Dout1 controls scenario (value 2), Dout2 controls scenario (value 3). To disable Immobilizer detection scenario value 0 is used.

| Minimum value | Maximum value | Default value | Goes with (depends on) parameters | Value type |
|---|---|---|---|---|
| 0 | 3 | 0 | | U8 |

#### 8.6.9 Immobilizer ignition timeout(ID=1609)

This feature sets the time, in seconds, on which ignition can be turned off without additional iButton identification.

| Minimum value | Maximum value | Recommended value | Goes with (depends on) parameters | Value type |
|---|---|---|---|---|
| 5 | 65535 | - | | U8 |

#### 8.6.10 iButton list checking scenario (ID=1608)

iButton list checking detection scenario can be enabled (value 1) or disabled (value 2).

| Minimum | Maximum | Default value | Goes with (depends on) | Value |
|---|---|---|---|---|

| value | value | | parameters | type |
|---|---|---|---|---|
| 0 | 3 | 0 | | U8 |

#### 8.6.11 Excessive Idling detection (ID=1610)

If ignition is ON and no movement, event will be generated when TMO reached. This functionality is 1 – enabled, 0 – disabled (default).

| Minimum value | Maximum value | Recommended value | Goes with (depends on) parameters | Value type |
|---|---|---|---|---|
| 0 | 255 | - | **Time to stationary (ID=1611)**<br>**Time to movement (ID=1612)** | U8 |

#### 8.6.12 Time to stationary (ID=1611)

If ignition is ON and no movement, event will be generated when TMO reached. This functionality is 1-enabled, 0-disabled (default).

| Minimum value | Maximum value | Recommended value | Goes with (depends on) parameters | Value type |
|---|---|---|---|---|
| 0 | 255 | - | **Scenario Enable (ID=1610)**<br>**Time to movement (ID=1612)** | U8 |

#### 8.6.13 Time to movement (ID=1612)

If ignition is ON and no movement, event will be generated when TMO reached. This functionality is 1 – enabled, 0 – disabled (default).

| Minimum value | Maximum value | Recommended value | Goes with (depends on) parameters | Value type |
|---|---|---|---|---|
| 0 | 255 | - | **Time to stationary (ID=1611)**<br>**Scenario Enable (ID=1610)** | U8 |

#### 8.6.14 Trip (ID=1280)

This parameter enables ability to detect START and STOP of the trip.

| Minimum value | Maximum value | Recommended value | Goes with (depends on) parameters | Value type |
|---|---|---|---|---|
| 0 | 1 | - | | U8 |

#### 8.6.15 Start Speed (ID=1281)

This parameter represents speed, which is detected as minimum speed to indicate TRIP START and generate event.

| Minimum value | Maximum value | Recommended value | Goes with (depends on) parameters | Value type |
|---|---|---|---|---|
| 0 | 255 | - | | U8 |

#### 8.6.16 Ignition Off Timeout (ID=1282)

This parameter represents timeout to wait if ignition is off in order to detect TRIP STOP and generate event.

| Minimum | Maximum | Recommended | Goes with (depends on) | Value |
|---|---|---|---|---|

| value | value | value | parameters | type |
|---|---|---|---|---|
| 0 | 65535 | - | | U16 |

#### 8.6.17 Trip distance mode (ID=1283)

There are three Trip types to choose: Between records, continuous trip, continuous. Between records – distance is counted separately for every record. Continuous trip – distance in records is summed up for the trip duration. Continuous – Distance is counted despite the trip end or ignition off state(trip value is saved to flash memory). For this feature I/O#10 ODOMETER must be enabled. If I/O ODOMETER is enabled, and Continuous distance counting variable is set to Continuous (value 1), TRIP distance is going to be counted continuously (from TRIP start to TRIP stop) and shown as I/O ODOMETER value.

| Parameter | ID | Value |
|---|---|---|
| Trip distance mode | 1283 | 0 –Between records |
| | | 1 – Continuous trip |
| | | 2 – Continuous |

#### 8.6.18 Enable odometer value setting (ID=1284)

Enables entering the current value of the odometer.

| Minimum value | Maximum value | Recommended value | Goes with (depends on) parameters | Value type |
|---|---|---|---|---|
| 0 | 1 | - | | U8 |

#### 8.6.19 Continuous odometer value (ID=1285)

Enters a current odometer value.

| Minimum value | Maximum value | Recommend ed value | Goes with (depends on) parameters | Value type |
|---|---|---|---|---|
| 0 | 4294967295 | - | | U32 |

#### 8.6.20 Remember iButton ID, while trip is detected(ID=1286)

This feature saves the iButton ID to flash memory and sends it with every record, while trip is detected.

| Minimum value | Maximum value | Default value | Goes with (depends on) parameters | Value type |
|---|---|---|---|---|
| 0 | 1 | 0 | | U8 |

#### 8.6.21 Geofencing

In this chapter it is explained how to get all parameters for the first Geofence zone (all ID numbers are for the 1st zone). And at the end of the chapter (part 8.6.10) is presented a table with the IDs of all the rest Geofence zones.

##### 8.6.21.1 Frame border (ID=1020)

Geofence border thickness, measured in meters.

| Minimum | Maximum | Recommended | Goes with (depends on) | Value |
|---|---|---|---|---|

| value | value | value | parameters | type |
|---|---|---|---|---|
| 0 | 1000000 | 1000 | **All Geofencing parameters** | U32 |

#### 8.6.21.2 Geofence Zone #1 Shape (ID=1030)

Geofence shape parameter can be: circle – value 0; rectangle – value 1.

| Minimum value | Maximum value | Recommended value | Goes with (depends on) parameters | Value type |
|---|---|---|---|---|
| 0 | 1 | - | **All Geofencing parameters** | U8 |

#### 8.6.21.3 Geofence Zone #1 Priority (ID=1031)

Parameter defines Geofence priority: 0 is disabled, 1 – low, 2 – high, 3 – panic;

| Minimum value | Maximum value | Recommended value | Goes with (depends on) parameters | Value type |
|---|---|---|---|---|
| 0 | 3 | - | **All Geofencing parameters** | U8 |

#### 8.6.21.4 Geofence Zone #1 Generate Event (ID=1032)

Generate event on:

a) On exiting zone – value 0;

b) On entering zone – value 1;

c) On both – value 2;

| Minimum value | Maximum value | Recommended value | Goes with (depends on) parameters | Value type |
|---|---|---|---|---|
| 0 | 3 | - | **All Geofencing parameters** | U8 |

#### 8.6.21.5 Geofence Zone #1 Longitude (X1) (ID=1033)

Parameter has two meanings dependent on zone shape. If shape is a rectangle, then ID=10333 is left down corner X coordinate. If shape is a circle, then ID=1033 is center of that circle X coordinate.

Sample value: 25.30528

| Minimum value | Maximum value | Recommended value | Goes with (depends on) parameters | Value type |
|---|---|---|---|---|
| -180 | 180 | - | **All Geofencing parameters** | Float |

#### 8.6.21.6 Geofence Zone #1 Latitude (Y1) (ID=1034)

Parameter has two meanings dependent on zone shape. If shape is a rectangle, then ID=1034 is left down corner Y coordinate. If shape is a circle, then ID=1034 is center of that circle Y coordinate.

| Minimum value | Maximum value | Recommended value | Goes with (depends on) parameters | Value type |
|---|---|---|---|---|
| -90 | 90 | - | **All Geofencing parameters** | Float |

#### 8.6.21.7 Geofence Zone #1 Longitude (X2) (ID=1035)

Parameter has two meanings depending on zone shape. If shape is a rectangle, then ID=1035 is right upper corner X coordinate. If shape is a circle, then ID=1035 is radius of circle with center of ID=1033 and ID=1034.

*For rectangle:*

| Minimum value | Maximum value | Recommended value | Goes with (depends on) parameters | Value type |
|---|---|---|---|---|
| -180 | 180 | - | **All Geofencing parameters** | Float |

*For circle:*

| Minimum value | Maximum value | Recommended value | Goes with (depends on) parameters | Value type |
|---|---|---|---|---|
| 0 | 1000000 | 1000 | **All Geofencing parameters** | Float |

#### 8.6.21.8 Geofence Zone #1 Latitude (Y2) (ID=1036)

If shape is rectangular, then ID=1036 is right upper corner Y coordinate. If shape circle, ID=1036 is not used.

| Minimum value | Maximum value | Recommended value | Goes with (depends on) parameters | Value type |
|---|---|---|---|---|
| -90 | 90 | - | **All Geofencing parameters** | Float |

Other 4 GeoFence zone's parameters have the same logic as shown in GeoFence Zone #1.

| GeoFence Zone Number | Geofence Zone's parameters |
|---|---|
| 1 | 1030-1036 |
| 2 | 1040-1046 |
| 3 | 1050-1056 |
| 4 | 1060-1066 |
| 5 | 1070-1076 |

### 8.6.22 AutoGeofencing

#### 8.6.22.1 Activation Timeout (ID=1102)

Parameter represents AutoGeofencing activation timeout in seconds.

| Minimum value | Maximum value | Recommended value | Goes with (depends on) parameters | Value type |
|---|---|---|---|---|
| 0 | 65535 | 60 | **Priority (ID=1103)** | U16 |

#### 8.6.22.2 Deactivate by (ID=1100)

Parameter defines Autogeofence deactivation source. Value 1 is dedicated for attached iButton, value 0 – for Ignition.

| Minimum value | Maximum value | Recommended value | Goes with (depends on) parameters | Value type |
|---|---|---|---|---|
| 0 | 1 | - | **Priority (ID=1103)**<br>**iButton List (ID=7000-7499)** | U8 |

#### 8.6.22.3 AutoGeofence event Priority (ID=1103)

Parameter defines AutoGeofence event priority: 0 is Disabled, 1 – low, 2 – high;

| Minimum value | Maximum value | Recommended value | Goes with (depends on) parameters | Value type |
|---|---|---|---|---|
| 0 | 2 | 1 | **AutoGeofence event generating (ID=1104)** | U8 |

#### 8.6.22.4 AutoGeofence event generating (ID=1104)

Generate event: 0 – on exiting zone, 1 – on entering zone, 2 – on both;

| Minimum value | Maximum value | Recommended value | Goes with (depends on) parameters | Value type |
|---|---|---|---|---|
| 0 | 2 | 0 | **Priority (ID=1103)**<br>**AutoGeofence event Priority (ID=1103)** | U8 |

#### 8.6.22.5 Radius (ID=1105)

Parameter represents radius of circle with center device coordinates after activating AutoGeofence feature.

| Minimum value | Maximum value | Recommended value | Goes with (depends on) parameters | Value type |
|---|---|---|---|---|
| 0 | 1000000 | 100 | **Priority (ID=1103)**<br>**Deactivate by (ID=1100)** | U32 |

### 8.6.23 iButton List (ID=7000-7499)

*Read 5.4.4.*

| Minimum value | Maximum value | Recommended value | Goes with (depends on) parameters | Value type |
|---|---|---|---|---|
| 0 | FFFFFFFF FFFFFFFF | - | **iButtons list checking (ID 1608)**<br>**Deactivate by (ID=1100)** | U64 |

## 8.7 I/O parameters

I/O properties are additional data sources which are recorded along with usual GPS data.

### 8.7.1 I/O#1 Priority (ID=2000)

Parameter defines I/O property type of priority: 0 is disabled, 1 – low, 2 – high, 3 – panic.

| Minimum value | Maximum value | Recommended value | Goes with (depends on) parameters | Value type |
|---|---|---|---|---|
| 0 | 3 | 1 | **I/O#1 High level (ID=2001)**<br>**I/O#1 Low level (ID=2002)**<br>**I/O#1 event generation type (ID=2003)**<br>**I/O#1 averaging length (ID=2004)** | S8 |

### 8.7.2 I/O#1 High level (ID=2001)

Parameter defines high value of triggered I/O property. This parameter is used to set thresholds for I/O properties to generate events.

| Minimum value | Maximum value | Recommended value | Goes with (depends on) parameters | Value type |
|---|---|---|---|---|
| -2147483647 | 2147483647 | 1 | **I/O#1 Priority (ID=2000)**<br>**I/O#1 Low level (ID=2002)** | S32 |

| | | | | |
|---|---|---|---|---|
| | | | **I/O#1 event generation type (ID=2003)**<br>**I/O#1 averaging length (ID=2004)** | |

### 8.7.3 I/O#1 Low level (ID=2002)

Parameter defines low value of triggered I/O property. This parameter is used to set thresholds for I/O properties to generate events.

| Minimum value | Maximum value | Recommended value | Goes with (depends on) parameters | Value type |
|---|---|---|---|---|
| -2147483647 | 2147483647 | 0 | **I/O#1 Priority (ID=2000)**<br>**I/O#1 High level (ID=2001)**<br>**I/O#1 event generation type (ID=2003)**<br>**I/O#1 averaging length (ID=2004)** | S32 |

### 8.7.4 I/O#1 event generation type (ID=2003)

Parameter defines when event is sent: 0 – on range exit, 1 – on range entrance, 2 – both, 3 – monitoring, 4 – hysteresis, 5 – on changes.

| Minimal value | Maximum value | Recommended value | Goes with (depends on) parameters | Value type |
|---|---|---|---|---|
| 0 | 4 | 3 | **I/O#1 Priority (ID=2000)**<br>**I/O#1 High level (ID=2001)**<br>**I/O#1 Low level (ID=2002)**<br>**I/O#1 averaging length (ID=2004)** | S8 |

### 8.7.5 I/O#1 averaging length (ID=2004)

Parameter defines I/O property sample length to average. If no averaging needed default value is 1.

| Minimum value | Maximum value | Recommended value | Goes with (depends on) parameters | Value type |
|---|---|---|---|---|
| 0 | 2592000 | 1 | **I/O#1 Priority (ID=2000)**<br>**I/O#1 High level (ID=2001)**<br>**I/O#1 Low level (ID=2002)**<br>**I/O#1 event generation type (ID=2003)** | S32 |

Other I/O property elements can be configured in same logic. All I/O element parameters are listed in the next table.

| I/O Element Number | I/O element parameters |
|---|---|
| Digital Input 1 | 2000-2004 |
| Digital Input 2 | 2010-2014 |
| Digital Input 3 | 2020-2024 |
| Digital Input 4 | 2030-2034 |
| Analog Input 1 | 2040-2044 |
| Analog Input 2 | 2050-2054 |
| Digital Output 1 | 2060-2064 |
| Digital Output 2 | 2070-2074 |
| GNSS PDOP | 2080-2084 |
| GNSS HDOP | 2090-2094 |
| External Voltage | 2100-2104 |
| GNSS Power | 2110-2114 |
| Movement Sensor | 2120-2124 |
| Odometer Value | 2130-2134 |
| GSM Operator | 2140-2144 |
| Speed | 2150-2154 |
| iButton ID | 2160-2164 |
| Data Mode | 2170-2174 |
| GSM Signal | 2180-2184 |
| Deep Sleep | 2190-2194 |
| Cell ID | 2200-2204 |
| Area Code | 2210-2214 |
| Dallas Temperature 1 | 2220-2224 |
| Dallas Temperature 2 | 2230-2234 |
| Dallas Temperature 3 | 2240-2244 |
| Battery Voltage | 2250-2254 |
| Battery Current | 2260-2264 |
| Ignition | 2270-2274 |
| Network Type | 2280-2284 |
| Continuous odometer | 2290-2294 |
| Dallas Temperature ID 1 | 2300-2304 |
| Dallas Temperature ID 2 | 2310-2314 |
| Dallas Temperature ID 3 | 2320-2324 |

## 8.8 LV-CAN features

### 8.8.1 CAN Mode

Choose an adapter which will be connected to device.

| Parameter | ID | Value |
|---|---|---|
| CAN Mode | 1620 | 0 – Auto Detect |
| | | 1 – LV-CAN200 |
| | | 2 – ALL-CAN300 |

### 8.8.2 I\O Send as 0 when ignition is off

Sends LV-CAN200/ALL-CAN300 I\O values as “0” when ignition turns off

| Parameter | ID | Value |
|---|---|---|
| Send I\O as 0 when ignition is 0 | 1621 | 0 – Disable |
| | | 1 – Enable |

## 8.9 SMS event configuration

### 8.9.1 I/O#1 element SMS event configuration (ID=5100)

Command sets SMS warning on I/O#1 element.

SMS Format: setparam X Y,W,Z
X – ID
Y – Enable/Disable (1/0)
W – Telephone number INDEX (See **8.4.18 SMS Event Predefined Numbers paragraph**, ID 150 – INDEX 0; ID151 – INDEX 1, …)
Z – SMS Text

Example: “setparam 5100 1,5,Digital Input 1 Event!”

Other I/O element SMS events can be configured in same logic. All I/O element SMS event IDs are listed in the next table.

| Element name (default SMS Event Text) | ID |
|---|---|
| Digital Input 1 | 5100 |
| Digital Input 2 | 5101 |
| Digital Input 3 | 5102 |
| Digital Input 4 | 5103 |
| Analog Input 1 | 5104 |
| Analog Input 2 | 5105 |
| Digital Output 1 | 5106 |
| Digital Output 2 | 5107 |
| GNSS PDOP | 5108 |
| GNSS HDOP | 5109 |
| External Voltage | 5110 |
| GNSS Power | 5111 |
| Movement Sensor | 5112 |
| Odometer Value | 5113 |
| GSM Operator | 5114 |
| Speed | 5115 |
| iButton ID | 5116 |
| Data Mode | 5117 |

| | |
|---|---|
| GSM Signal | 5118 |
| Deep Sleep | 5119 |
| Cell ID | 5120 |
| Area Code | 5121 |
| Dallas Temperature 1 | 5122 |
| Dallas Temperature 2 | 5123 |
| Dallas Temperature 3 | 5124 |
| Battery Voltage | 5125 |
| Battery Current | 5126 |
| Ignition | 5127 |
| Network Type | 5128 |
| Continuous odometer | 5129 |
| Dallas Temperature ID 1 | 5130 |
| Dallas Temperature ID 2 | 5131 |
| Dallas Temperature ID 3 | 5132 |
| LVC Vehicle Speed | 5133 |
| LVC Accelerator Pedal Position | 5134 |
| LVC Fuel Consumed | 5135 |
| LVC Fuel Level (liters) | 5136 |
| LVC Engine RPM | 5137 |
| LVC Total Mileage | 5138 |
| LVC Fuel Level (percent) | 5139 |
| LVC Program Number | 5140 |
| LVC ModuleID | 5141 |
| LVC Engine Work Time | 5142 |
| LVC Engine Work Time (counted) | 5143 |
| LVC Total Mileage (counted) | 5144 |
| LVC Fuel Consumed (counted) | 5145 |
| LVC Fuel Rate | 5146 |
| LVC AdBlue Level (percent) | 5147 |
| LVC AdBlue Level (liters) | 5148 |
| LVC Engine Load | 5149 |
| LVC Engine Temperature | 5150 |
| LVC Axle 1 Load | 5151 |
| LVC Axle 2 Load | 5152 |
| LVC Axle 3 Load | 5153 |
| LVC Axle 4 Load | 5154 |
| LVC Axle 5 Load | 5155 |
| LVC Control State Flags | 5156 |
| LVC Agricultural Machinery Flags | 5157 |
| LVC Harvesting Time | 5158 |
| LVC Area of Harvest | 5159 |
| LVC Mowing Efficiency | 5160 |
| LVC Grain Mown Volume | 5161 |
| LVC Grain Moisture | 5162 |

| | |
|---|---|
| LVC Harvesting Drum RPM | 5163 |
| LVC Gap Under Harvesting Drum | 5164 |
| LVC Security State Flags | 5165 |
| LVC Tacho Total Vehicle Distance | 5166 |
| LVC Trip Distance | 5167 |
| LVC Tacho Vehicle Speed | 5168 |
| LVC Tacho Driver Card Presence | 5169 |
| LVC Driver1 States | 5170 |
| LVC Driver2 States | 5171 |
| LVC Driver1 Continuous Driving Time | 5172 |
| LVC Driver2 Continuous Driving Time | 5173 |
| LVC Driver1 Cumulative Break Time | 5174 |
| LVC Driver2 Cumulative Break Time | 5175 |
| LVC Driver1 Duration Of Selected Acti | 5176 |
| LVC Driver2 Duration Of Selected Acti | 5177 |
| LVC Driver1 Cumulative Driving Time | 5178 |
| LVC Driver2 Cumulative Driving Time | 5179 |
| LVC Driver1 ID High | 5180 |
| LVC Driver1 ID Low | 5181 |
| LVC Driver2 ID High | 5182 |
| LVC Driver2 ID Low | 5183 |
| LVC Battery Temperature | 5184 |
| LVC Battery Level (percent) | 5185 |
| LVC Door Status | 5186 |
| LVC DTC Errors | 5187 |
| LVC Slope of Arm | 5188 |
| LVC Rotation of Arm | 5189 |
| LVC Eject of Arm | 5190 |
| LVC Horizontal Dist Arm Vechicle | 5191 |
| LVC Height Arm Above Ground | 5192 |
| LVC Drill RPM | 5193 |
| LVC Amount of Spread Salt Square Mete | 5194 |
| LVC Battery Voltage | 5195 |
| LVC Amount Spread Fine Grained Salt | 5196 |
| LVC Amount Spread Coarse Grained Salt | 5197 |
| LVC Amount Spread DiMix | 5198 |
| LVC Amount Spread Coarse Grained Calc | 5199 |
| LVC Amount Spread Calcium Chloride | 5200 |
| LVC Amount Spread Sodium Chloride | 5201 |
| LVC Amount Spread Magnesium Chloride | 5202 |
| LVC Amount Spread Gravel | 5203 |
| LVC Amount Spread Sand | 5204 |
| LVC Width Pouring Left | 5205 |
| LVC Width Pouring Right | 5206 |
| LVC Salt Spreader Work Hours | 5207 |

| | |
|---|---|
| LVC Distance During Salting | 5208 |
| LVC Load Weight | 5209 |
| LVC Retarder Load | 5210 |
| LVC Time On Cruise Control | 5211 |
| LVC CNG Status | 5212 |
| LVC CNG Used | 5213 |
| LVC CNG Level | 5214 |
| Green Driving | 5215 |
| OverSpeeding | 5217 |
| Authorized Driving | 5218 |
| Immobilizer | 5219 |
| Trip | 5220 |
| Geofence Zone 1 | 5221 |
| Geofence Zone 2 | 5222 |
| Geofence Zone 3 | 5223 |
| Geofence Zone 4 | 5224 |
| Geofence Zone 5 | 5225 |
| AutoGeofence | 5226 |
| Jamming Detection | 5227 |
| Idling | 5228 |

# 9 FM3602/FM3612 with Light Vehicles Can adapter LV-CAN200/ALL-CAN300

## 9.1 Purpose of Light Vehicles Can Adapter LV-CAN200/ALL-CAN300

LV-CAN200 is used to read data from light vehicles, while ALL-CAN300 is used to read data from any type of transport: light vehicles, Trucks, busses, agriculture and other special transport. With those adapters FM3602/FM3612 device is able to collect and send vehicle data.

LV-CAN200/ALL-CAN300 Technical characteristics:

| PARAMETER | VALUE |
|---|---|
| Supply voltage | 9 to 50V |
| Power supply current | Average 10mA<br>Max (peak) 100mA |
| Working temperature | -40..85 °C |
| Max working humidity | 60 % (non condensate) |

## 9.2 LV-CAN200/ALL-CAN300 program number selection

LV-CAN200/ALL-CAN300 must be set to program number which depends on vehicle model.
Correct program number is always written on LV-CAN200/ALL-CAN300 mounting scheme. Please contact Your Teltonika sales manager to get latest supported vehicle list and mounting scheme for your vehicle, please provide CAR manufacturer, model and year information.

### 9.2.1 LV-CAN200/ALL-CAN300 program number configuration via SMS command

LV-CAN200/ALL-CAN300 program number can be set remotely, using SMS command:

**lvcansetprog X**

X is new program number value.

### 9.2.2 Selecting LV-CAN200/ALL-CAN300 program number manually

Steps to set program number:

- Hold SWITCH down till LED stars blinking
- Release the SWITCH
- Then LED starts blinking and counting first digit of program number, (one blink means digit 1, two blink digit 2 etc.)
- To stop counter push SWITCH
- Release the SWITCH, then LED starts blinking and counting second digit of program number
- To stop counter push SWITCH
- Release the SWITCH, then LED starts blinking and counting third digit on program number
- To stop counter push SWITCH
- Release SWITCH, if programming is succeded LED will blink 10 times

**Figure 54. Adapter signaling led**

### 9.2.3 Program number logic change

Due to the growing number of supported cars, program numbers have exceeded 999. In order to maintain one number format, we are moving from 3 digits, to 4 digits program numbers.

In new LV-CAN200/ALL-CAN300 firmware (from 2017-09-01) all program numbers that were up to 999 are changed to start from 1000. So that further program numbers would continue the counting with 4 digit numbers.

However, all existing program numbers stays the same, it is just “1” appeared in front of them. Device still understands entered 3 digit program number (via SMS/GPRS), it will automatically add “1” before it. If you enter “247” – device will turn it into the “1247”. In Bootloader it is only 4 digit format available, just add “1” in from of the needed program number.

**Example:**

If use oldest connection schemes where program number displayed as 3 digit program number:

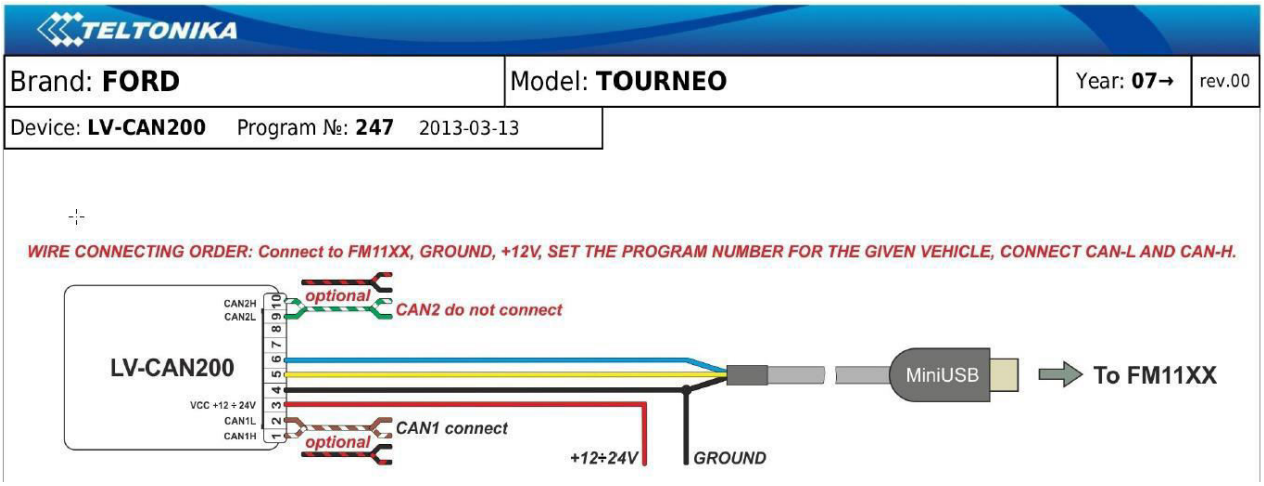


Using LV-CAN200/ALL-CAN300 Bootloader from soft version 2017-09-27 need add “1” before it:

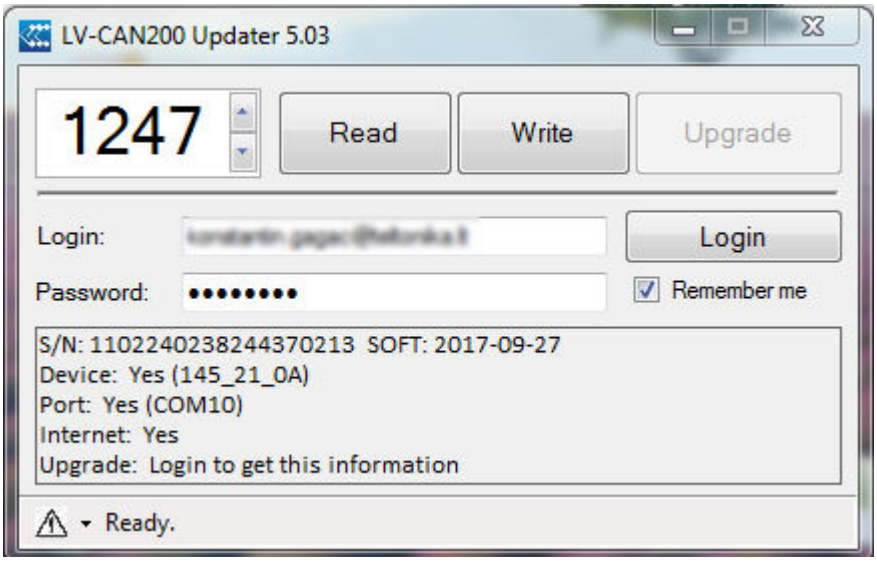


### 9.3 Connecting FM3602/FM3612 with Light Vehicles CAN adapter

FM3602/FM3612 connection with CAN adapter is different than with other FM devices, when connecting ALL-CAN300 and LV-CAN200 adapters. FM3602/FM3612 has closed USB connector and CAN adapter is connected with INPUT 5 and INPUT 6 wires as shown in **Error! Reference source not found.**55.

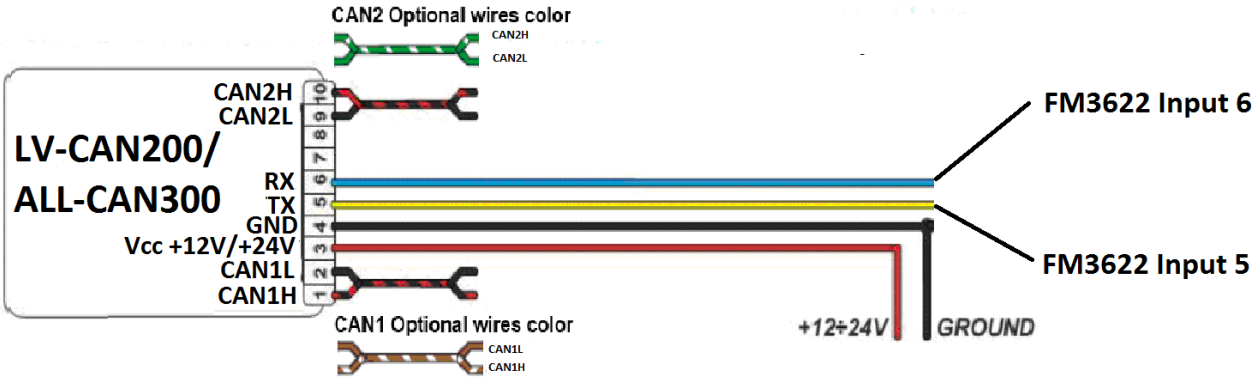


**Figure 55. LV-CAN200/ALL-CAN300 Adapter connection cable pinout**

**LV-CAN200_6 – order code for LV-CAN200 without USB cable.**
**ALL-CAN300_2 – order code for ALLCAN300 without USB cable.**

### 9.4 Connecting Light Vehicles CAN adapter

Connect Light Vehicles Can adapter Pin 1 and Pin 2 to cars CAN bus. CAN interface location of the supported light vehicle is described on mounting scheme.

Connect car power supply lines to Pin 3 positive, Pin 4 Negative.

Connect Light Vehicles Can adapter Pin 5 to FM3602/FM3612 Input 5 and Pin 6 to FM3602/FM3612 Input 6.

Pins 9, 10 connection is optional it depends on exact car model.

For exact pinout see sticker on Light Vehicles Can adapter.

**Attention! For detailed connection diagram of adapter to light vehicle please contact Teltonika LTD sales representative and provide CAR manufacturer, model and year information.**

**Attention! Do not swap CAN L and CAN H lines.**
**Do not swap power supply lines. Make sure that voltage do not exceeds 30 V.**
**Power supply lines should be connected at the end of installation work.**

### 9.5 FM3602/FM3612 Configuration

FM3602/FM3612 can be configured using "SCAN" function or "Offline Configuration" (Figure 59)

#### 9.5.1 SCAN function

Scan function can be used when FM3602/FM3612 is connected to CAN adapter and PC (Figures 57, 58). After connection is made Press scan button to see available CAN parameters (Note, that car engine must be started). Enable CAN data which needs to be sent to server and save configuration by pressing "Save" button.

**Figure 57. Connect adapter LV-CAN200/ALL-CAN300 to FM36X2**

**Figure 58. Connect FM3602/FM3612 to PC and configure**

CAN bus data which can be read from your car is shown in "Light Vehicles Can adapter supported cars" document.

#### 9.5.2 Offline configuration

User can select which CAN parameter should be sent to server without connection to adapter. Please note that parameters depend on vehicle manufacturer and vehicle model. Please for further information check "Light Vehicles Can adapter supported cars" document.

There are two types of operations with CAN data elements:

- Monitoring of CAN bus data
- CAN bus data event capturing

Monitoring method is used when user wants to receive CAN data on regular basis, for example every 20 seconds.

Event functionality is used to store additional AVL packet when state of CAN element is changing. For example Speed changes, low fuel level, engine temperate, etc.

Send data to server field – allows enabling CAN element so it is added to the AVL data packet and sent to the server. By default, all CAN elements are disabled and FM3602/FM3612 records only GPS data.

It is possible to set CAN message priority: On Low Priority, On High Priority, and On Panic. Regular packets are sent as Low priority records. When low priority event is triggered, FM3602/FM3612 makes additional record with indication what was the reason for that was CAN element change. When High priority is selected, module makes additional record with high priority flag and sends event packet immediately to the server by GPRS. Panic priority triggers same actions as high priority, but if GPRS fails, it sends AVL packet to server using SMS mode if SMS is enabled in SMS settings.

Data Acquisition Type – defines when to generate event – when value enters defined range, exits it or both, also is possible to select event which you want to generate then you change values, like crossing both values in high and low levels (Hysteresis).

High and Low levels – defines CAN value range. If CAN value enter or exits this range, FM3602/FM3612 generates event by “Data Acquisition Type” settings. Figure 59 show example of FM3602/FM3612 CAN configuration.

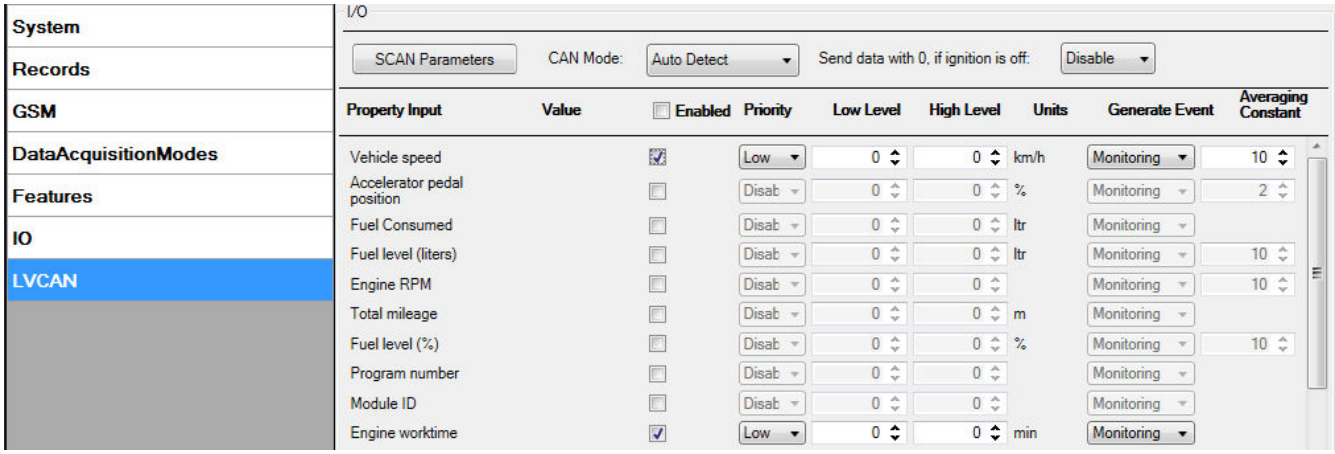


**Figure 59. Configurator example**

Available CAN Bus IO parameters and configuration can be found in Configurators CAN tab (Figure 59) and in next chapter “Parameters ID”.

## 9.6 Parameters ID

When no I/O element is enabled, AVL packet comes with GPS information only. After enabling I/O element(s) AVL packet along with GPS information contains current value(s) of enabled I/O element. AVL packet decoding is described in "FMXXXX Protocols" document. List of available CAN bus data, parameter size, ID and value range you can find in table 9.1 and 9.1.1.

**Table 9.1 ACQUIRED PARAMETRS IO ID**

| Category name | (signal) name | Size (Bytes) | Param IO ID | Value range |
|---|---|---|---|---|
| **65265 – Cruise Control/Vehicle Speed** | Vehicle Speed | 1 | 81 | 0-250 km/h* |
| **61443 – Electronic Engine Controller #2** | Accelerator Pedal Position | 1 | 82 | 0-100 %* |
| **65257 – Fuel Consumption** | Total Fuel Used | 4 | 83 | 0-99999999liters* |
| **65276 – Dash Display** | Fuel Level [liters] | 2 | 84 | 0-100 liters* |
| **61444 – Electronic Engine Controller #1** | Engine RPM | 2 | 85 | 0-8200 rpm* |
| **65217 – High Resolution Vehicle Distance** | Vehicle Distance | 4 | 87 | 0-2145000000 meters* |
| **65276 – Dash Display** | Fuel Level [%] | 1 | 89 | 0-100 %* |
| **Program number** | LV-CAN200 Program number | 4 | 100 | 0-999 |

**NOTE:**

**„Total Fuel Used" is sent to server multiplied by 10.**
**Example: if value was 150.5 liters, „1505" will be sent to server.**

**Table 9.1.1 ACQUIRED ALL-CAN PARAMETERS IO ID**

| Property Input | Param index | Size (Bytes) | Param IO ID | Measurement units | a1 | Remarks |
|---|---|---|---|---|---|---|
| **ALL-CAN300 Program number** | 29 | 4 | 100 | - | - | |
| **Module ID** | 30 | 8 | 101 | - | - | |
| **Engine Work Time** | 31 | 4 | 102 | min | 1 | |
| **Engine Work Time (counted) *** | 32 | 4 | 103 | min | 1 | |
| **Total Mileage** | 33 | 4 | 87 | meters | 1 | |
| **Total Mileage (counted) *** | 34 | 4 | 105 | meters | 1 | |
| **Fuel Consumed** | 35 | 4 | 83 | Ltr * 10 | 0.1 | |
| **Fuel Consumed (counted) *** | 36 | 4 | 107 | Ltr * 10 | 0.1 | |
| **Fuel Level [%]** | 37 | 1 | 89 | proc.* | 1 | |

| | | | | | | |
|---|---|---|---|---|---|---|
| **Fuel Level [liters]** | 38 | 2 | 84 | Ltrs * 10 | 0.1 | |
| **Fuel Rate** | 39 | 2 | 110 | (Ltrs * 10) / h | 0.1 | |
| **AdBlue Level (percent)** | 40 | 1 | 111 | proc. | 1 | |
| **AdBlue Level (liters)** | 41 | 2 | 112 | Ltrs * 10 | 0.1 | |
| **Engine RPM** | 42 | 2 | 85 | - | 1 | |
| **Engine Load** | 43 | 1 | 114 | proc. | 1 | Valid range: 0 – 125% |
| **Engine Temperature** | 44 | 1 | 115 | °C x 10 | 0.1 | signed |
| **Accelerator Pedal Position** | 45 | 1 | 82 | proc. | 1 | |
| **Vehicle Speed** | 46 | 1 | 81 | km/h | 1 | |
| **Axle 1 Load** | 47 | 2 | 118 | kg | 1 | |
| **Axle 2 Load** | 48 | 2 | 119 | kg | 1 | |
| **Axle 3 Load** | 49 | 2 | 120 | kg | 1 | |
| **Axle 4 Load** | 50 | 2 | 121 | kg | 1 | |
| **Axle 5 Load** | 51 | 2 | 122 | kg | 1 | |
| **Control State Flags** | 52 | 4 | 123 | - | **-** | **see table 9.2.1** |
| **Agricultural Machinery Flags** | 53 | 8 | 124 | - | **-** | **see table 9.2.1** |
| **Harvesting Time** | 54 | 4 | 125 | min | 1 | |
| **Area of Harvest** | 55 | 4 | 126 | $m^2$ | 1 | |
| **Mowing Efficiency** | 56 | 4 | 127 | $m^2/h$ | 1 | |
| **Grain Mown Volume** | 57 | 4 | 128 | kg | 1 | |
| **Grain Moisture** | 58 | 2 | 129 | proc. | 1 | |
| **Harvesting Drum RPM** | 59 | 2 | 130 | - | - | |
| **Gap Under Harvesting Drum** | 60 | 1 | 131 | mm | 1 | |
| **Security State Flags** | 61 | 8 | 132 | - | | **see table 9.2.1** |
| **Tacho Total Vehicle Distance** | 62 | 4 | 133 | m | 1 | |
| **Trip Distance** | 63 | 4 | 134 | m | 1 | |
| **Tacho Vehicle Speed** | 64 | 2 | 135 | km/h | 1 | |
| **Tacho Driver Card Presence** | 65 | 1 | 136 | - | **-** | **see table 9.2.1** |
| **Driver1 States** | 66 | 1 | 137 | - | **-** | **see table 9.2.1** |
| **Driver2 States** | 67 | 1 | 138 | - | **-** | **see table 9.2.1** |
| **Driver1 Continuous Driving Time** | 68 | 2 | 139 | min | 1 | |

| | | | | | | |
|---|---|---|---|---|---|---|
| **Driver2 Continuous Driving Time** | 69 | 2 | 140 | min | 1 | |
| **Driver1 Cumulative Break Time** | 70 | 2 | 141 | min | 1 | |
| **Driver2 Cumulative Break Time** | 71 | 2 | 142 | min | 1 | |
| **Driver1 Duration Of Selected Activity** | 72 | 2 | 143 | min | 1 | |
| **Driver2 Duration Of Selected Activity** | 73 | 2 | 144 | min | 1 | |
| **Driver1 Cumulative Driving Time** | 74 | 2 | 145 | min | 1 | |
| **Driver2 Cumulative Driving Time** | 75 | 2 | 146 | min | 1 | |
| **Driver1 ID High** | 76 | 8 | 147 | ASCII | | |
| **Driver1 ID Low** | 77 | 8 | 148 | ASCII | | |
| **Driver2 ID High** | 78 | 8 | 149 | ASCII | | |
| **Driver2 ID Low** | 79 | 8 | 150 | ASCII | | |
| **Battery Temperature** | 80 | 2 | 151 | °C x 10 | 0.1 | signed |
| **Battery Level (percent)** | 81 | 1 | 152 | proc. | 1 | |

**Table 9.2.1 ALLCAN300 IO element values**

| Idx | Description | Size, Bytes | AVL ID | Value bitmasks |
|---|---|---|---|---|
| 52 | Control state flags | 4 | 123 | **Byte0 (LSB):**<br>**0x01** – STOP<br>**0x02** – Oil pressure / level<br>**0x04** – Coolant liquid temperature / level<br>**0x08** – Handbrake system<br>**0x10** – Battery charging<br>**0x20** – AIRBAG<br>**Byte1:**<br>**0x01** – CHECK ENGINE<br>**0x02** – Lights failure<br>**0x04** – Low tire pressure<br>**0x08** – Wear of brake pads<br>**0x10** – Warning<br>**0x20** – ABS<br>**0x40** – Low Fuel<br>**Byte2:**<br>**0x01** – ESP<br>**0x02** – Glow plug indicator<br>**0x04** – FAP<br>**0x08** – Electronics pressure control<br>**0x10** – Parking lights<br>**0x20** – Dipped headlights<br>**0x40** – Full beam headlights |

| | | | | |
|---|---|---|---|---|
| | | | | **Byte3:**<br>**0x40** – Passenger's seat belt<br>**0x80** – Driver's seat belt |
| 53 | Agricultural machinery flags | 8 | 124 | **Byte0 (LSB):**<br>**0x01** – Mowing<br>**0x02** – Grain release from hopper<br>**0x04** – First front hydraulic turned on<br>**0x08** – Rear Power Take-Off turned on<br><br>**Byte1:**<br>**0x01** – Excessive play under the threshing drum<br>**0x02** – Grain tank is open<br>**0x04** – 100% of Grain tank<br>**0x08** – 70% of Grain tank<br>**0x10** – Drain filter in hydraulic system of drive cylinders is plugged<br>**0x20** – Pressure filter of drive cylinders hydraulic system is plugged<br>**0x40** – Alarm oil level in oil tank<br>**0x80** – Pressure filter of brakes hydraulic system is plugged<br><br>**Byte2:**<br>**0x01** – Oil filter of engine is plugged<br>**0x02** – Fuel filter is plugged<br>**0x04** – Air filter is plugged<br>**0x08** – Alarm oil temperature in hydraulic system of chassis<br>**0x10** – Alarm oil temperature in hydraulic system of drive cylinders<br>**0x20** – Alarm oil pressure in engine<br>**0x40** – Alarm coolant level<br>**0x80** – Overflow chamber of hydraulic unit<br><br>**Byte3:**<br>**0x01** – Unloader drive is ON. Unloading tube pivot is in idle position<br>**0x02** – No operator!<br>**0x04** – Straw walker is plugged<br>**0x08** – Water in fuel<br>**0x10** – Cleaning fan RPM<br>**0x20** – Trashing drum RPM<br>**Byte4:**<br>**0x02** – Low water level in the tank<br>**0x04** – First rear hydraulic turned on<br>**0x08** – Standalone engine working<br>**0x10** – Right joystick moved right<br>**0x20** – Right joystick moved left<br>**0x40** – Right joystick moved front<br>**0x80** – Right joystick moved back<br>**Byte5:** |

| | | | | |
|---|---|---|---|---|
| | | | | 0x01 – Brushes turned on<br>0x02 – Water supply turned on<br>0x04 – Vacuum cleaner<br>0x08 – Unloading from the hopper<br>0x10 – High Pressure washer (Karcher)<br>0x20 – Salt (sand) disperser ON<br>0x40 – Low salt (sand) level<br>**Byte6:**<br>0x01 – Second front hydraulic turned on<br>0x02 – Third front hydraulic turned on<br>0x04 – Fourth front hydraulic turned on<br>0x08 – Second rear hydraulic turned on<br>0x10 – Third rear hydraulic turned on<br>0x20 – Fourth rear hydraulic turned on<br>0x40 – Front three-point Hitch turned on<br>0x80 – Rear three-point Hitch turned on<br>**Byte7:**<br>**0x01** – Left joystick moved right<br>**0x02** – Left joystick moved left<br>**0x04** – Left joystick moved front<br>**0x08** – Left joystick moved back<br>**0x10** – Front Power Take-Off turned on |
| 61 | Security state flags | 8 | 132 | **Byte0 (LSB):**<br>0x20 – bit appears when any operate button in car was put<br>0x40 – bit appears when immobilizer is in service mode<br>0x80 – immobilizer, bit appears during introduction of a programmed sequence of keys in the car.<br>**Byte1:**<br>0x01 – the key is in ignition lock<br>0x02 – ignition on<br>0x04 – dynamic ignition on<br>0x08 – webasto<br>0x20 – car closed by factory's remote control<br>0x40 – factory-installed alarm system is actuated (is in panic mode)<br>0x80 – factory-installed alarm system is emulated by module<br>**Byte2:**<br>0x01 – parking activated (automatic gearbox)<br>0x10 – handbrake is actuated (information available only with ignition on)<br>0x20 – footbrake is actuated (information available only with ignition on)<br>0x40 – engine is working (information available only when the ignition on)<br>0x80 – revers is on<br>**Byte3:**<br>**0x01** – Front left door opened<br>**0x02** – Front right door opened |

| | | | | |
|---|---|---|---|---|
| | | | | **0x04** – Rear left door opened<br>**0x08** – Rear right door opened<br>**0x10** – engine cover opened<br>**0x20** – trunk door opened<br>**Byte4:**<br>**0x01** – car was closed by the factory's remote control<br>**0x02** – car was opened by the factory's remote control<br>**0x03** – trunk cover was opened by the factory's remote control<br>**0x04** – module has sent a rearming signal<br>**0x05** – car was closed three times by the factory's remote control<br>- High nibble (mask 0xF0 bit)<br>**0x80** – CAN module goes to sleep mode |
| 65 | Tachograph driver card presence | 1 | 136 | **0x00** – No driver card<br>**0x01** – Driver1 card presence<br>**0x02** – Driver2 card presence<br>**0x03** – Driver1 and driver2 cards present |
| 66 | Driver 1 states | 1 | 137 | **0xX0** – break/rest<br>**0xX1** – availability<br>**0xX2** – work<br>**0xX3** – driving<br>**0x0X** – no time-related warning detected<br>**0x1X** – limit #1: 15 min before 4 1/2 h<br>**0x2X** – limit #2: 4 1/2 h reached (continuous driving time exceeded)<br>**0x3X** – limit #3: 15 minutes before optional warning 1<br>**0x4X** – limit #4: optional warning 1 reached<br>**0x5X** – limit #5: 15 min before optional warning **0x6X** – limit #6: optional warning 2 reached |
| 67 | Driver 2 states | 1 | 138 | |

## 9.7 SMS Configuration

All LV-CAN200/ALL-CAN300 IO elements can be configured remotely via SMS command. First ID number is always '2', second, and third ID number refers to specific LV-CAN200/ALL-CAN200 IO element (table 9.2). And the last ID number refers to sections – Property; Generation Type; Low and High levels (Table 9.3).

Here's example:

ID 2333 – configures Accelerator Pedal position parameter "High Level".

**Table 9.3 LV-CAN200/ALL-CAN300 and IO elements SMS configuration Ids range**

| LV-CAN200/ALL-CAN300 and IO Elements | Parameter Ids range |
|---|---|
| LVC Vehicle Speed | 2320-2324 |
| LVC Accelerator Pedal Position | 2330-2334 |

| | |
|---|---|
| LVC Fuel Consumed | 2340-2344 |
| LVC Fuel Level (liters) | 2350-2354 |
| LVC Engine RPM | 2360-2364 |
| LVC Total Mileage | 2370-2374 |
| LVC Fuel Level (percent) | 2380-2384 |
| LVC Program Number | 2390-2394 |
| LVC ModuleID | 2400-2404 |
| LVC Engine Work Time | 2410-2414 |
| LVC Engine Work Time (counted) | 2420-2424 |
| LVC Total Mileage (counted) | 2430-2434 |
| LVC Fuel Consumed (counted) | 2440-2444 |
| LVC Fuel Rate | 2450-2454 |
| LVC AdBlue Level (percent) | 2460-2464 |
| LVC AdBlue Level (liters) | 2470-2474 |
| LVC Engine Load | 2480-2484 |
| LVC Engine Temperature | 2490-2494 |
| LVC Axle 1 Load | 2500-2504 |
| LVC Axle 2 Load | 2510-2514 |
| LVC Axle 3 Load | 2520-2524 |
| LVC Axle 4 Load | 2530-2534 |
| LVC Axle 5 Load | 2540-2544 |
| LVC Control State Flags | 2550-2554 |
| LVC Agricultural Machinery Flags | 2560-2564 |
| LVC Harvesting Time | 2570-2574 |
| LVC Area of Harvest | 2580-2584 |
| LVC Mowing Efficiency | 2590-2594 |
| LVC Grain Mown Volume | 2600-2604 |
| LVC Grain Moisture | 2610-2614 |
| LVC Harvesting Drum RPM | 2620-2624 |
| LVC Gap Under Harvesting Drum | 2630-2634 |
| LVC Security State Flags | 2640-2644 |
| LVC Tacho Total Vehicle Distance | 2650-2654 |
| LVC Trip Distance | 2660-2664 |
| LVC Tacho Vehicle Speed | 2670-2674 |
| LVC Tacho Driver Card Presence | 2680-2684 |
| LVC Driver1 States | 2690-2694 |
| LVC Driver2 States | 2700-2704 |
| LVC Driver1 Continuous Driving Time | 2710-2714 |
| LVC Driver2 Continuous Driving Time | 2720-2724 |
| LVC Driver1 Cumulative Break Time | 2730-2734 |
| LVC Driver2 Cumulative Break Time | 2740-2744 |
| LVC Driver1 Duration Of Selected Acti | 2750-2754 |
| LVC Driver2 Duration Of Selected Acti | 2760-2764 |
| LVC Driver1 Cumulative Driving Time | 2770-2774 |
| LVC Driver2 Cumulative Driving Time | 2780-2784 |

| | |
|---|---|
| LVC Driver1 ID High | 2790-2794 |
| LVC Driver1 ID Low | 2800-2804 |
| LVC Driver2 ID High | 2810-2814 |
| LVC Driver2 ID Low | 2820-2824 |
| LVC Battery Temperature | 2830-2834 |
| LVC Battery Level (percent) | 2840-2844 |

**Table 9.4 LV-CAN200 IO parameters configuration**

| Parameter ID | Parameter name | Available values | |
|---|---|---|---|
| 2xx0 | Priority | 0 – IO element disabled<br>1 – Low priority<br>0 – High priority<br>3 – Panic priority | |
| 2xx1 | Generation type | 0 – Event on exit<br>1 – Event on entrance<br>2 – Event on both<br>3– Monitoring<br>4 – Hysteresis<br>5 – On change | |
| 2xx2 | Low level | See table 9.4 – **Allowed Values** | |
| 2xx3 | High Level | | |
| 2xx4 | Averaging Constant | Minimum value | Maximum value |
| | | 0 | 2592000 |

**Table 9.5 LV-CAN200 IO parameters allowed values**

| LV-CAN200 IO Element | Minimum value | Maximum value |
|---|---|---|
| Speed | 0 | 250 |
| Accelerator pedal position | 0 | 100 |
| Total fuel used | 0 | 99999999 |
| Fuel level (liters) | 0 | 100 |
| Engine RPM | 0 | 8200 |
| Vehicle distance | 0 | 2145000000 |
| Fuel level (proc.) | 0 | 100 |
| Program number | 0 | 999 |

## 9.8 CAN Program Number request by SMS

CAN program number can be obtained via SMS:

**SMS Text:** “ lvcangetprog ”
**Response:** “**CAN Program Nr: XXX**”

### 9.9 Get LV-CAN info by SMS

Full LV-CAN information via SMS:
SMS Text: “ lvcangetinfo”
Response:
“Prog: 139
SWRevison: 6
KernVer: 10
KernVar: 49
MdlID: 8884443332221110”

### 9.10 References

1. Light Vehicles Can adapter LV-CAN200/ALL-CAN300 Supported cars
2. Cars mounting scheme

# 10 MOUNTING RECOMMENDATIONS

## 10.1 Connecting Wires

- Wires should be connected while module is not plugged in.
- Wires should be fastened to the other wires or non-moving parts. Try to avoid heat emitting and moving objects near the wires.
- The connections should not be seen very clearly. If factory isolation was removed while connecting wires, it should be applied again.
- If the wires are placed in the exterior or in places where they can be damaged or exposed to heat, humidity, dirt, etc., additional isolation should be applied.
- Wires cannot be connected to the board computers or control units.

## 10.2 Connecting Power Source

- Be sure that after the car computer falls asleep, power is still available on chosen wire. Depending on car, this may happen in 5 to 30 minutes period.
- When module is connected, be sure to measure voltage again if it did not decrease.
- It is recommended to connect to the main power cable in the fuse box.
- Use 3A, 125V external fuse.

## 10.3 Connecting Ignition Wire

- Be sure to check if it is a real ignition wire – power does not disappear while starting the engine.
- Check if this is not an ACC wire (when key is in the first position, most electronics of the vehicle are available).
- Check if power is still available when you turn off any of vehicles devices.
- Ignition is connected to the ignition relay output. As alternative, any other relay, which has power output, when ignition is on, may be chosen.

## 10.4 Connecting Ground Wire

- Ground wire is connected to the vehicle frame or metal parts that are fixed to the frame.
- If the wire is fixed with the bolt, the loop must be connected to the end of the wire.
- For better contact scrub paint from the place where loop is connected.

**PAY ATTENTION! Connecting the power supply must be carried out in a very low impedance point on-board vehicle network. These points in the car are the battery terminals. Therefore, we recommend connecting the power of FM3602/FM3612 (wire GND and POWER) directly to the battery terminals. Another valid option is to connect the wires to the main POWER cable inside the fuse box (if there is none, then to the power supply where the fuses of vehicle's computer are), wire GND must be connected in a special point, designed to connect GND vehicle computer. Connecting the GND at an arbitrary point to the mass of the car is unacceptable, as static and dynamic potentials on the line GND will be unpredictable, which can lead to unstable FM3602/FM3612 and even its failure.**

### 10.5 Module installation

- FM3602/FM3612 must be placed sticker on TOP (please refer picture below).
- It's forbidden to place FM3602/FM3612 under metal surfaces.
- It's recommended to place FM3602/FM3612 device far from car radio, speakers or alarm systems.
- FM3602/FM3612 must be placed so its state is as horizontal as possible.
- FM3602/FM3612 should not be seen or easily reached.
- FM3602/FM3612 should be firmly fixed to the surface or cables.
- FM3602/FM3612 cannot be fixed to heat emitting or moving parts.
- SIM card should be inserted in the module while the connector is plugged off (while module has no power).

It is recommended to place FM3602/FM3612 device behind dashboard as close to the window as possible. A good example of device placement is displayed in a picture below.

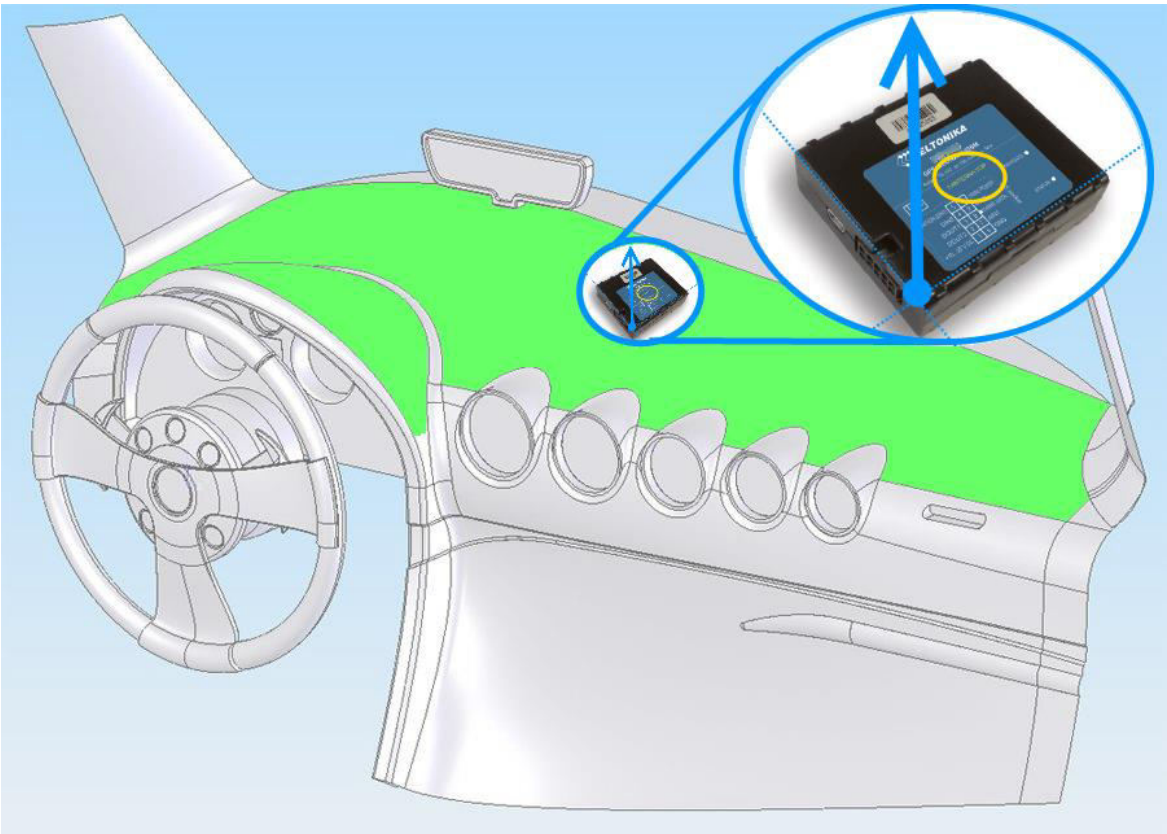

**Figure 61. Correct placement of FM36X2**

## CHANGE LOG

| Nr. | Date | Version | Comments |
|---|---|---|---|
| 1 | 2017-06-16 | 0.1 | Preliminary draft release. |
| 2 | 2017-09-01 | 0.2 | Edited device pinout |
| 3 | 2017-10-31 | 0.3 | Added LV –CAN200/ALLAN300 migration to 4 digit program nr. Information |
| 4 | 2017-11-28 | 0.5 | Added SELV limited power source |
| 5 | 2017-12-06 | 0.6 | Added devices view and dimensions |
| 6 | 2018-08-06 | 0.7 | Minor changes. Modem LED description removed. |
| 7 | 2018-09-14 | 0.8 | Added Analog input 2, changed parameters IDs |
| 8 | 2018-09-18 | 0.9 | Minor changes |
| 9 | 2018-10-25 | 0.10 | Minor text changes |