TEST REPORT

Product	:	Home Gateway, Wireless Router
Trade mark	:	ZTE
Model/Type reference	:	ZXHN Z1321
Serial Number	:	N/A
Report Number	:	EED32S80148801
Date of Issue	:	Apr. 01, 2026
Product Class	:	Item 19 of Article 2 Paragraph 1
Test result	:	PASS

Prepared for:

ZTE Corporation

ZTE Plaza, Keji Road South, Hi-Tech Industrial Park, Nanshan District, Shenzhen, Guangdong, P.R.China

Prepared by:

Centre Testing International Group Co., Ltd.
Hongwei Industrial Park, Zone 70, Bao'an District, Shenzhen, Guangdong, China
TEL: +86-755-3368 3668
FAX: +86-755-3368 3385

Compiled by:	Frazer Li	Reviewed by:	Keven Tan
Approved by:	Aaron Ma	Date:	Apr. 01, 2026

Check No.: 2850200126

1 Test Summary

Test Item	Test Requirement	Ordinance regulating radio equipment Limit	Result
Antenna Requirement	Item 19 of Article 2 Paragraph 1	Ordinance regulating radio equipment Chapter II Section 3	PASS
Test frequency	Item 19 of Article 2 Paragraph 1	N/A	PASS
Frequency Error	Item 19 of Article 2 Paragraph 1	±50ppm or less	PASS
Occupied Bandwidth	Item 19 of Article 2 Paragraph 1	FH/FH+DS/FH+OFDM 83.5MHz or less OFDM : 40MHz or less Others : 26MHz or less	PASS
Antenna Power	Item 19 of Article 2 Paragraph 1	Designated value: For the 2400-2483.5MHz (1) FH, FH+DS , FH+OFDM: 3mW/MHz (2) OFDM , DSSS: 10mW/MHz or less OFDM OBW 26-38MHz: 5mW/MHz or less Tolerance: +20,No lower limit (3) Other than (1) & (2): 10mW For 2484MHz: 10mW/MHz or less Tolerance: +20%,N/A	PASS
Unwanted Emission Strength	Item 19 of Article 2 Paragraph 1	For 2400-2483.5MHz (1) Below 2387 MHz : 2.5μW/MHz (2) 2387 to 2400 MHz : 25μW/MHz (3) 2483.5 through 2496.5 MHz :25μW/MHz (4)Over 2496.5 MHz : 2.5μW/MHz	PASS
Interference prevention capability	Item 19 of Article 2 Paragraph 1	Ordinance regulating radio equipment Chapter I Section 5	PASS
Carrier sense capability	Item 19 of Article 2 Paragraph 1	Ordinance regulating radio equipment Chapter II Section 4.11,2) d	PASS
RF accessibility	Item 19 of Article 2 Paragraph 1	N/A	PASS
Secondary Radiated Emission Strength	Item 19 of Article 2 Paragraph 1	(1) Below 1 GHz: -54dBm (2) 1GHz or higher: -47dBm	PASS

Remark:

EUT: In this whole report EUT means Equipment Under Test.

Tx: In this whole report Tx (or tx) means the product in transmitting status.

Rx: In this whole report Rx (or rx) means the product in receiving status.

RF: In this whole report RF means Radiated Frequency.

DS: Direct spreading FH: Frequency hopping

OFDM: Orthogonal frequency division multiplexing

2 Contents

1 TEST SUMMARY 2
2 CONTENTS 3
3 GENERAL INFORMATION 4
3.1 Client Information 4
3.2 General Description of EUT 4
3.3 EUT Test Environment Recorded 6
3.4 Description of Support Units 6
3.5 Test Location 6
3.6 Measurement Uncertainty (95% confidence levels, k=2) 6
4 EQUIPMENT LIST 7
5 RADIO TECHNICAL REQUIREMENTS SPECIFICATION 9
5.1 Transmitter Requirements 10
5.1.1 EUT test voltage and Frequency 10
5.1.2 Antenna Requirement 13
5.1.3 Frequency Error 14
5.1.4 Occupied Bandwidth (99%) 15
5.1.5 Antenna Power 16
5.1.6 Unwanted Emission Strength 17
5.1.7 Carrier sense capability 18
5.1.8 Interference prevention function 19
5.1.9 RF accessibility 20
5.2 Receiver Requirements 21
5.2.1 Secondary Radiated Emission Strength 21
6 PHOTOGRAPHS 22

3 General Information

3.1 Client Information

Applicant:	ZTE Corporation
Address of Applicant:	ZTE Plaza, Keji Road South, Hi-Tech Industrial Park, Nanshan District, Shenzhen, Guangdong, P.R.China
Manufacturer:	ZTE Corporation
Address of Manufacturer:	ZTE Plaza, Keji Road South, Hi-Tech Industrial Park, Nanshan District, Shenzhen, Guangdong, P.R.China

3.2 General Description of EUT

Product Name:	Home Gateway, Wireless Router
Model No.:	ZXHN Z1321
Test Model No.:	ZXHN Z1321
Trade Mark:	ZTE
Operating Frequency:	Wi-Fi: IEEE 802.11b/g/n(HT20)/ax(HE20): 2412MHz to 2472MHz IEEE 802.11n(HT40)/ax(HE40): 2422MHz to 2462MHz
Conducted rate power	802.11b:9mW/MHz 802.11g:8mW/MHz 802.11n (HT20): 7mW/MHz 802.11n (HT40): 4mW/MHz 802.11ax (HE20): 7mW/MHz 802.11ax (HE40): 4mW/MHz
Number of Channels:	802.11b: 13 Channels 802.11g: 13 Channels 802.11n (HT20): 13 Channels 802.11n (HT40): 9 Channels
Type of Modulation:	IEEE 802.11a: OFDM (BPSK, QPSK, 16QAM, 64QAM) IEEE 802.11n(HT20/HT40): OFDM (BPSK, QPSK, 16QAM, 64QAM) IEEE 802.11ac(VHT20/VHT40):OFDM (BPSK, QPSK, 16QAM, 64QAM, 256QAM) IEEE 802.11ax(HE20/HE40): OFDMA (BPSK, QPSK, 16QAM, 64QAM, 256QAM,1024QAM)
Transmit Data Rate:	802.11b:1M/2M/5.5M/11M bps 802.11g:6M/9M/12M/18M/24M/36M/48M/54M bps 802.11n(HT20): MCS0-MCS15 802.11n(HT40): MCS0-MCS15 802.11ax(HE20): MCS0-MCS11 802.11ax(HE40): MCS0-MCS11
Number of subcarriers:	802.11g: 3/MHz 802.11n (HT20):3/MHz 802.11n (HT40):3/MHz 802.11ax (HE20):13/MHz 802.11ax (HE40):13/MHz
Channel Separation:	5MHz
Antenna Type:	Dipole antenna
Antenna gain:	Type1: Angeei: 2G1: 2dBi, 2G2: 2dBi, Beamforming gain: 2dBi Type2: South Star: 2G1: 2dBi, 2G2: 2dBi, Beamforming gain: 2dBi

Test Power Grade:	Default
Test Software of EUT:	QA
Power Supply:	DC 12.0V
Sample Received Date:	Jan. 24, 2026
Sample tested Date:	Jan. 24, 2026 to Mar. 19, 2026

3.3 EUT Test Environment Recorded

Temperature:	23°C
Humidity:	54% RH
Atmospheric Pressure:	1010mbar

3.4 Description of Support Units

The EUT has been tested with associated equipment below.

1）Support equipment

Description	Manufacturer	Model No.	Certification	Supplied by
Netbook	Lenovo	ThinkBook 14G 8ITL	FCC / CE	CTI

3.5 Test Location

All tests were performed at:
Centre Testing International Group Co., Ltd.
Hongwei Industrial Park, Zone 70, Bao'an District, Shenzhen, Guangdong, China
Telephone: +86 (0) 755 3368 3668 Fax:+86 (0) 755 3368 3385
No tests were sub-contracted.

3.6 Measurement Uncertainty (95% confidence levels, k=2)

No.	Item	Measurement Uncertainty
1	Frequency Error	10Hz
2	Occupied Bandwidth	10kHz
3	Antenna Power	0.55dB
4	Spurious Emissions	0.46dB(30MHz-1GHz)
		0.55dB(1GHz-18GHz)
5	Carrier sense capability	1.0dB
6	Temperature test	0.64°C
7	Humidity test	3.8%
8	DC and low frequency voltages test	0.026%

4 Equipment List

RF test system						
Equipment	Manufacturer	Model No.	Serial Number	Cal. Date (mm-dd-yyyy)	Cal. Due date (mm-dd-yyyy)	Calibration body
Spectrum Analyzer	Keysight	N9010A	MY54510339	11-25-2025	11-24-2026	CTIMT
Spectrum Analyzer	R&S	FSW43	102978	08-11-2025	08-10-2026	LISAI
Signal Generator	Keysight	N5182B	MY53051549	11-13-2025	11-12-2026	CTIMT
Signal Generator	Agilent	N5181A	MY46240094	11-25-2025	11-24-2026	CTIMT
DC Power	Keysight	E3642A	MY56376072	11-13-2025	11-12-2026	CTIMT
Communication test set	R&S	CMW500	169004	03-03-2025 02-06-2026	03-02-2026 02-05-2027	CTIMT
RF control unit(power unit)	JS Tonscend	JS0806-2	24I80620925	07-21-2025	07-20-2026	CTIMT
Wi-Fi 7GHz Band Extendder	JS Tonscend	TS-WF7U2	2206200002	05-12-2025	05-11-2026	LISAI
high-low temperature test chamber	Dong Guang Qin Zhuo	LK-80GA	QZ20150611879	11-13-2025	11-12-2026	CTIMT
Temperature/ Humidity Indicator	biaozhi	HM10	1804186	05-26-2025	05-25-2026	CTIMT
BT&WI-FI Automatic test software	JS Tonscend	JS1120-3	V3.6.21	---	---	---
Digital multimeter	FLUKE	17B MAX	59545050WS	10-15-2025	10-14-2026	CTIMT

Remark:

CTI: Centre Testing International Group Co., Ltd
Adress:Build C,Hongwei Industrial Zone, Baoan 70 District, Shenzhen, China
CTIMT: CTI MEASUREMENT AND TESTING CO.,LTD.
Address :Building B and C, Taohuayuan Sci-Tech Innovation Park, Tiegang Community, Xixiang Sub-district, Bao'an District, Shenzhen, Guangdong, China
LISAI: Guangzhou LiSai Metrology & Test Co.,Ltd.
Address:No.8.South Street Shi Ji Institute Guangzhou.Guangdong.China

Note: Usage method (c) calibration.

(a) Calibration conducted by the National Institute of Information and Communications Technology (NICT) in

Japan (hereinafter referred to as "NICT") or a designated calibration agency under Article 102-18 paragraph (1) in JRL.

(b) Correction conducted pursuant to the provisions of Article 135 or Article 144 of the Measurement Act (Act No. 51 of 1992) .

(c) Calibration conducted in countries except Japan, which shall be equivalent to the calibration conducted by the NICT or a designated calibration agency under Article 102-18 paragraph (1).

(d) Calibration, etc. conducted by using measuring instruments and other equipment listed in the right column of appended table No. 3, which shall have been given any type of calibration, etc. listed above from (a) to(c).

From JRL Article 24-2, paragraph 4, Item 2

Notice: Calibration duration for above equipment is 1 year.

5 Radio Technical Requirements Specification

Table 1: Radio Technical Requirements Specification for 2.4 GHz band wide-band low-power data communication system (Item 19 of Article 2 Paragraph 1)

Items	Technical standard
Assigned frequency or designated frequency	2400MHz-2483.5MHz
Communication method	One-way communication, simplex, semi-duplex, or duplex operation of digital signal transmission including spread spectrum
Tolerance of frequency ($\times 10^{-6}$)	±50ppm
Tolerance of occupied bandwidth	FH: 83.5MHz or less FH + DS: 83.5MHz or less FH + OFDM: 83.5MHz or less OFDM: 38MHz or less Others: 26MHz or less
Antenna power	Designated value (1) FH, FH+DS , FH+OFDM: 3mW/MHz (2) OFDM , DS other than (1): 10mW/MHz (3) Other than (1) & (2):10mW Tolerance: +20,No lower limit
Antenna gain	1) 12.14 dBi or less in principle 2) In case of directional antenna (1) FH, FH+DS or FH+OFDM: EIRP≤ 16.91dBm/MHz (2) OFDM or DS other than (1) EIRP≤ 22.14dBm/MHz (3) Other than (1) and (2): 22.14dBm or less (4) OFDM OBW 26 - 38MHz: 19.14dBm/MHz (5) Half-power angle of directional antenna (e) in case of the item 2):e ≤ 360/A (The A is 10 in maximum.)
Tolerance of spurious emission intensity	For 2400-2483.5Mz (1) Below 2387 MHz : 2.5μW (2) 2387 to 2400 MHz : 25μW (3) 2483.5 through 2496.5 MHz : 25μW (4) Over 2496.5 MHz : 2.5μW
Limit of secondary radiated emissions	(1) Below 1 GHz: 4nW (2) 1 GHz or higher: 20nW
Interference prevention function	Shall have the function of automatic transmission and reception of identification sign.
Structure	Shall be of the structure that the RF and modulator sections excluding antenna cannot easily be opened.
Note	DS: Direct spread FH: Frequency hopping OFDM: Orthogonal frequency division multiplexing

Note: The Technical Standards described here do not cover all of the regulated items.

5.1 Transmitter Requirements

5.1.1 EUT test voltage and Frequency

5.1.1.1 EUT test voltage

Power Supply:	DC 12.0V
Test voltage require:	Supply the rated voltage and the rated voltage ±10% to power supply. However, If the fluctuation of input voltage to the circuit of RF unit (except power supply) of test equipment is under ±1%, when input voltage from external power supply to the test equipment is fluctuated by ±10%: Conduct the test with the rated voltage only.
Power Supply result:	The measurement result of the voltage fluctuation at RF circuit when DC 12V +/- 10%.

Remark	DC Input	RF circuit
NV	10.8V	3.3V
LV	12V	3.3V
HV	13.8V	3.3V

NT: Normal Temperature
NV: Normal Voltage
LV: Low Voltage
HV: High Voltage

5.1.1.2 Test frequency

Test frequencies:	If the EUT can be set to 3 of more different (carrier) frequencies in 1 allocated band, testing shall be performed using the Lowest, Middle and the Highest frequency (L,M and H). If there are 2 or fewer frequencies, testing shall be performed with the available frequencies.

Frequency range over which device operates	Number of frequencies	Location in the range of operation
1 MHz or less	1	Middle
1 to 10 MHz	2	1 near top and 1 near bottom
More than 10 MHz	3	1 near top. 1 near middle and 1 near bottom

EUT channels and frequencies list:

802.11b

Channel	Frequency (MHz)
1	2412
2	2417
3	2422
4	2427
5	2432
6	2437
7	2442
8	2447
9	2452
10	2457
11	2462
12	2467
13	2472

Test frequencies are the lowest channel: 1 channel(2412MHz), middle channel: 7 channel(2442 MHz) and the highest channel: 13 channel(2472 MHz)

802.11g&n (HT20)/ax(HE20)

Channel	Frequency (MHz)
1	2412
2	2417
3	2422
4	2427
5	2432
6	2437
7	2442
8	2447
9	2452
10	2457
11	2462
12	2467
13	2472

Test frequencies are the lowest channel: 1 channel(2412MHz), middle channel: 7 channel(2442 MHz) and the highest channel: 13 channel(2472 MHz)

802.11n (HT40)/ax(HE40)

Channel	Frequency (MHz)
1	2422
2	2427
3	2432
4	2437
5	2442
6	2447
7	2452
8	2457
9	2462

Test frequencies are the lowest channel: 1 channel(2422MHz), middle channel: 5 channel(2442 MHz) and the highest channel: 9 channel(2462 MHz).

5.1.2 Antenna Requirement

Standard requirement	
Applicable for equipment with an antenna terminal, including testing terminals) If an antenna connector is available, all relevant tests will be carried out conducted. If not, tests will be carried out in an anechoic room or with a suitable test-fixture.	
EUT Antenna	Refer to internal photos.
The antenna is Dipole antenna. Type1 Angeei: The best case gain of the antenna is 2dBi, Beamforming gain: 2dBi Type2 South Star: The best case gain of the antenna is 2dBi, Beamforming gain: 2dBi	
Result: An antenna connector is available; all relevant tests will be carried out conducted.	

5.1.3 Frequency Error

Test Requirement:	Item 19 of Article 2 Paragraph 1
Test Method:	MIC Notice No.88 Appendix No.43
EUT Test Status:	Enter the unmodulation mode for the product. Test in Channel lowest, middle and highest, keep in continuously transmitting status.
Test Configuration:	
	EUT → **Spectrum Analyzer**
Test Conditions:	Frequency Counter or Spectrum Analyzer is used for measurement.
EUT conditions:	Modulation/Spread/Hopping off, CW Tx If EUT does not accept “Modulation OFF” mode in the measurement, you may use “Modulation ON” mode. In that case you can use the Max power Frequency as the measuring results.
Spectrum Analyzer conditions:	Frequency: Test Frequency Span 1MHz RBW 10kHz (Modulation ON), VBW 10kHz (Modulation ON), Sweep Time Auto Detector mode Positive peak Indication mode Max hold
Technical standard:	Tolerance of frequency: $\pm 50\times 10^{-6}$
Test result:	Refer to Appendix: 2.4G Wi-Fi of Report No. EED32S80148801

5.1.4 Occupied Bandwidth (99%)

Test Requirement:	Item 19 of Article 2 Paragraph 1
Test Method:	MIC Notice No.88 Appendix No.43
EUT Test Status:	Pre-Scan has been conducted to determine the worst-case mode from all possible combinations between available modulations, data rates and antenna ports (if EUT with antenna diversity architecture). Following channel(s) was (were) selected for the final test as listed below.
Test Configuration:	
EUT → **Spectrum Analyzer**	
EUT conditions:	Modulation/Spread/Hopping on, PN9 Modulation Tx For equipment using diffusion code, set to the test diffusion code and modulate with standard coding test signal.
Spectrum Analyzer conditions:	Frequency: Test Frequency Span set 2~3 time of BW RBW 300kHz VBW 300kHz Sweep Time Auto Detector mode Positive peak Indication mode Max hold OBW 99%
Technical standard:	OFDM : 38MHz or less Others : 26MHz or less
Test result:	Refer to Appendix: 2.4G Wi-Fi of Report No. EED32S80148801

5.1.5 Antenna Power

Test Requirement:	Item 19 of Article 2 Paragraph 1
Test Method:	MIC Notice No.88 Appendix No.43
EUT Test Status:	Pre-Scan has been conducted to determine the worst-case mode from all possible combinations between available modulations, data rates and antenna ports (if EUT with antenna diversity architecture). Following channel(s) was (were) selected for the final test as listed below.
Test Configuration:	
EUT → **Spectrum Analyzer**	
EUT conditions:	Modulation/Spread/Hopping on, PN9 Modulation Tx For equipment using diffusion code, set to the test diffusion code and modulate with standard coding test signal.
Spectrum Analyzer conditions:	Step 1 Frequency: Test Frequency Span 40MHz/80MHz (DSSS,OFDM) RBW 1MHz VBW 1MHz Sweep Time Auto Detector mode Positive peak Indication mode Max hold Step 2 Frequency: Test Frequency Span: 0MHz RBW: 1MHz/3MHz VBW: 1MHz/3MHz Sweep: Time Auto Detector mode: RMS Indication mode: Clear Write
Technical standard:	Antenna Power (1) FH, FH+DS , FH+OFDM 3mW/MHz or less (2) OFDM , DS other than (1) 10mW/MHz or less (3) Other than (1) & (2) 10mW or less Tolerance:+20,No lower limit
Test result:	Refer to Appendix: 2.4G Wi-Fi of Report No. EED32S80148801

5.1.6 Unwanted Emission Strength

Test Requirement:	Item 19 of Article 2 Paragraph 1
Test Method:	MIC Notice No.88 Appendix No.43
EUT Test Status:	Pre-Scan has been conducted to determine the worst-case mode from all possible combinations between available modulations, data rates and antenna ports (if EUT with antenna diversity architecture). Following channel(s) was (were) selected for the final test as listed below.
Test Configuration:	
EUT → **Spectrum Analyzer**	
EUT conditions:	Modulation/Spread/Hopping on, PN9 Modulation Tx For equipment using diffusion code, set to the test diffusion code and modulate with standard coding test signal.
Measurement Procedure:	Step1 All spurious are measured from 30MHz to 12.5GHz by peak mode. Step2 IF the value measured by Step1 is 2dB or less, measure in average mode.
Spectrum Analyzer conditions(Step 1):	Frequency: 30MHz-13GHz RBW 1000kHz (30MHz-1GHz), 1000kHz (over 1GHz) VBW 1000kHz (30MHz-1GHz), 1000kHz (over 1GHz) Sweep Time Auto Detector mode Positive peak Indication mode Max hold
Spectrum Analyzer conditions(Step 2):	Frequency: Spurious Frequency Span 0Hz RBW 1MHz VBW 1MHz Sweep Time Auto Detector mode Sample Indication mode Max hold
Technical standard:	For 2400-2483.5MHz (1) Below 2387MHz : 2.5μW/MHz (2) 2387 to 2400MHz : 25μW/MHz (3) 2483.5 through 2496.5MHz : 25μW/MHz (4)Over 2496.5MHz : 2.5μW/MHz
Test result:	Refer to Appendix: 2.4G Wi-Fi of Report No. EED32S80148801

5.1.7 Carrier sense capability

Test Requirement:	Item 19 of Article 2 Paragraph 1
Test Method:	MIC Notice No.88 Appendix No.43
EUT Test Status:	The EUT state shall be “normal mode link with wireless router”
Test Configuration:	
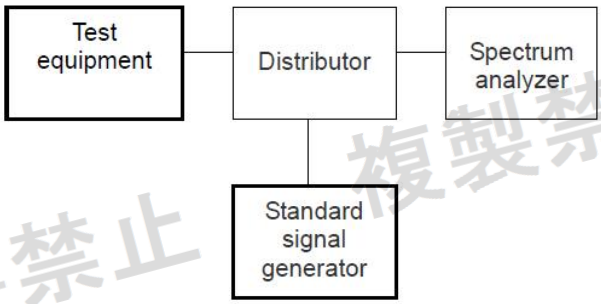	
Measurement Procedure:	1. SG adjusted the frequency as same as the EUT transmitted signal and emitted the absence of modulation from SG and power level is (on 22.79+G-20*log(f)dBm)(G is the antenna gain, f is the test frequency). 2. Turn off the RF signal of the SG. 3. EUT have transmitted the maximum modulation signal and fixed channelize. 4. Setting of SA: RBW/VBW=1MHz/1MHz, Span= 50MHz, Sweep time= auto, Sweep mode= continuous, Detect mode=positive peak 5. SG RF signal on, 6. Record the result, 7. SG RF signal off, 8. Record the result.
Technical standard:	EUT shall be stop the transmitted any signal and SG RF signal off. Note: It is not applicable to occupied bandwidth within 26MHz.
Test result:	The unit does meet the requirements (Good). Refer to Appendix: 2.4G Wi-Fi of Report No. EED32S80148801

5.1.8 Interference prevention function

Test Procedure

1)For EUTs capable of automatically transmitting identification data

a. Transmit identification data from EUT to Demodulator

b. Confirm identification data is correctly received by Demodulator

2)For EUTs capable of automatically receiving identification data

c. Transmit identification data from Link Partner to EUT

d. Confirm communication link is established

e. Link Partner shall respond by transmitting different identification data back to the EUT

f. Confirm EUT stops transmitting, or confirm EUT recognizes that the two identification data are different

Test result:

MAC: 38-16-5A-6D-8F-40

The unit does meet the requirements.(PASS)

5.1.9 RF accessibility

Standard requirement

Article 49-20, paragraph 1 (a)

The EUT shall be constructed in such a way that sensitive RF parts, (like modulation and oscillator parts) cannot be reached easily by the user. These parts shall be covered by soldered metal caps or glue or by other mechanical covers. If the covers are fixed with screws, these shall be not the common type(s) like a Phillips, but special versions like Torx, so that the user cannot open the device with common tools.

☐ Sealed with special screws.
☐ Plastic chassis is being welded using ultrasonic waves.
☐ Chassis is glued using a special adhesive.
☐ Metal covers are spot-fused.
☐ Cover is specially interlocked.
☐ RF and Modulation components are covered with shielding case and this shielding case is soldered.
☐ Shield case is welded at RF and modulation parts, and ID-ROM is welded using the BGA Method.
☐ Shield case is welded at RF and modulation parts, and ID-ROM is glued at its lead with a special adhesive.
☐ Shield case is welded at RF and modulation parts, and ID-ROM is glued with anon-transparent laminating agent.
☒ Semiconductor circuits of high-frequency parts and modulation parts have more than 10 pins distanced smaller than 1.5mm each other.
Refer to internal photos.

5.2 Receiver Requirements

5.2.1 Secondary Radiated Emission Strength

Test Requirement:	Item 19 of Article 2 Paragraph 1
Test Method:	MIC Notice No.88 Appendix No.43
EUT Test Status:	Pre-Scan has been conducted to determine the worst-case mode from all possible combinations between available modulations, data rates and antenna ports (if EUT with antenna diversity architecture). Following channel(s) was (were) selected for the final test as listed below.
Test Configuration:	
	EUT → **Spectrum Analyzer**
EUT conditions:	Rx
Measurement Procedure:	Step 1 All spurious are measured from 30 MHz to 12.5 GHz by peak mode. Step 2 IF the value measured by Step1 is 2 dB or less, measure in average mode.
Spectrum Analyzer conditions(Step 1):	RBW 100kHz (30MHz-1GHz) , 1MHz (over 1GHz) VBW 100kHz (30MHz-1GHz) , 1MHz (over 1GHz) Sweep Time Auto Detector mode Positive peak Indication mode Max hold
Spectrum Analyzer Conditions(Step 2):	Frequency: Spurious Frequency Span 0Hz RBW 100kHz (30MHz-1GHz) , 1MHz (over 1GHz) VBW 100kHz (30MHz-1GHz) , 1MHz (over 1GHz) Sweep Time Auto Detector mode Sample Indication mode Max hold
Technical standard:	(1) Below 1 GHz : 4nW or less (2) 1 GHz and over : 20nW or less
Test result:	Refer to Appendix: 2.4G Wi-Fi of Report No. EED32S80148801

6 PHOTOGRAPHS

Refer to Appendix Photographs of Report No. EED32S80148801.

Statement

1. This report is considered invalid without approved signature, special seal and the seal on the perforation;

2. The Company Name shown on Report and Address, the sample(s) and sample information was/were provided by the applicant who should be responsible for the authenticity which CTI hasn't verified;

3. The result(s) shown in this report refer(s) only to the sample(s) tested;

4. Unless otherwise stated,the decision rule for conformity reporting is based on Binary Statement for Simple Acceptance Rule stated in ILAC-G8:09/2019/CNAS-GL015:2022;

5. Without written approval of CTI, this report can't be reproduced except in full;

*** End of Report ***