VEGA
ABSOLUTE

NB-IoT MODEM WITH RS-232/RS-485 INTERFACE

VEGA NB-13

User manual

Distributed by

Document Information	
Title	NB-IoT modem with RS-232/RS-485 interface Vega NB-13
Document type	Manual – Translation from Russian
Document number	V02-NB13-01
Revision and date	05 - 30 July 2020

This document applies to the following products:

Product name	Type number
Vega NB	Vega NB-13

Revision History

Revision	Date	Name	Comments
01	30.10.2019	KEV	The first release
02	20.01.2020	KEV	Description of operation modes is added, communication protocol is added
03	12.05.2020	KEV	"Communication and data collection algorithm" part is added, minor changes
04	14.07.2020	KEV	Minor changes
05	30.07.2020	KEV	New functionality is described, data collection mode through ModBus, new packets in transparent mode

CONTENTS

INTRODUCTION 4
1 DESCRIPTION AND OPERATION 5
Device description 5
Communication and data collection algorithm 5
Functional 6
Marking 6
2 SPECIFICATION 7
3 OPERATION 8
Contacts 8
Hall sensor 10
Buttons 11
Indication 12
Initial Startup 13
Connecting via USB 13
4 VEGA NB-IoT CONFIGURATOR 15
Interface of the application 15
Connection to the device 16
“System” tab 17
“Settings” tab 18
“ModBus settings” tab 20
“Vega NB-13” tab 22
5 COMMUNICATION PROTOCOL 24
Data collection mode 24
Transparent mode 27
6 STORAGE AND TRANSPORTATION REQUIREMENTS 29
7 CONTENT OF THE PACKAGE 30
8 WARRANTY 31

INTRODUCTION

This manual is designated for Vega NB-13 modem with RS-232/RS-485 interface (hereinafter – the modem) manufactured by Vega-Absolute OOO and provides information on powering and activation procedure, control commands and functions of the counter.

This manual is targeted at specialists familiar with installation work fundamentals of electronic and electrical equipment.

The counter shall be installed and adjusted by qualified specialists in order to ensure proper operation of the device

Vega-Absolute OOO reserves the right to make changes to the manual related to the improvement of equipment and software, as well as to eliminate typos and inaccuracies, without prior notice.

1 DESCRIPTION AND OPERATION

DEVICE DESCRIPTION

Vega NB-13 modem with RS-232/RS-485 interface is designed for the data collection from the external devices connected through RS-232/RS-485 interfaces and transmitting them to the server by the NB-IoT technology.

In addition, Vega NB-13 can be used as a security device – two additional inputs operate in security mode, there is also a Hall sensor.

The modem with RS-232/RS-485 interface can be used for any utilities' meters and industrial equipment with RS-232 or RS-485 interface or for the periodic collection of temperature values from the 1-Wire sensors.

RS-232 and RS-485 have the separate contacts but they can't operate at the same time. You can choose it at a software level while setting the device.

Vega NB-13 has an external NB-IoT antenna and ingress protection rating IP67. Also, modem has an output for external devices powering with 8 V.

The counter is powered by an external supply with power 5...55 V.

COMMUNICATION AND DATA COLLECTION ALGORITHM

Modem can operate in two modes: in the **transparent mode** the Vega NB-13 modem does not collect data, in the **data collection mode** the data collection and communication are carried out by the schedule.

In the "Transparent" mode, the modem opens a transparent radio channel between the device connected via the RS-485/RS-232 interface and the TCP server. After connecting the power, the device immediately opens the communication channel if the timeout of the transparent channel session is not set, and the session is supported indefinitely. If the timeout is set, then the session closes automatically after the timeout. Opening a session can be performed: when the power is connected (only when the timeout is not set), during an event at the security input, by the Hall sensor, by the button (holding up to two LED flashes), by command from the configurator. In the transparent mode, the modem does not accumulate data in the black box.

In the "Data collection" mode the readings are collected from the meter with a configurable period 5, 15, 30 minutes, 1, 6, 12 or 24 hours. The readings stored in the device memory and transmitting during the next communication session with the NB-IoT network. The adjustable data transfer period can be equal to 5, 15, 30 minutes, 1, 6, 12 and 24 hours. Data transferring in random point in time during set period. At the next communication session, the device starts sending accumulated packets with readings, from the earliest to the latest. If there is no network registration or server connection the undelivered packets are saved in the device memory until the next communication session according to the schedule.

Herewith, the device continues to collect data according to the data collection period and store it in memory. When any event occurs (time, alarm at the security input, the “Init” button pressed on the board, the "Generate" button pressed in the Configurator), the modem collects all data, including polling the ModBus device (if the checkbox "Enable ModBus" is active). All received data is stored in non-volatile memory as a record in a black box.

The internal clock is set automatically when device connected to the "Vega NB-IoT Configurator" via USB.

FUNCTIONAL

Vega NB-13 modem has the following features:

- RS-232 or RS-485 interface
- Requests through ModBus protocol
- 1-Wire interface for connection of temperature sensors (up to 10) in ‘data collection’ mode
- Two inputs operating in the «security» mode for connecting the external leakage and safety sensors, etc.
- Two operating modes: “Transparent” and “Data collection”
- Time referencing of readings by internal clock
- Communication in case of security inputs or Hall sensor actuation
- Temperature measurement
- External voltage measuring

MARKING

Device marked with sticker that contain the next information:

- Device model;
- IMEI;
- Month and year of manufacture;
- QR-code containing IMEI for automatized count.

Sticker located in three places – on device case, in factory certificate and on the packing box.

2 SPECIFICATION

Main	
Interfaces	RS-232/RS-485, 1-Wire
ModBus support	yes
Security inputs	2
USB-port	micro-USB, type B
Operating temperatures	-40...+85 °C
Built-in temperature sensor	yes
Hall sensor	yes
Quantity of black box records	up to 100 000
Cellular communications	
Supported Cellular Standards	LTE Cat NB1
Data transfer protocol	MQTT
LTE NB-IoT antenna type	external
Power	
External power	5...55 V
Case	
Housing dimensions	95 x 95 x 50 mm
Ingress protection rating	IP67

3 OPERATION

CONTACTS

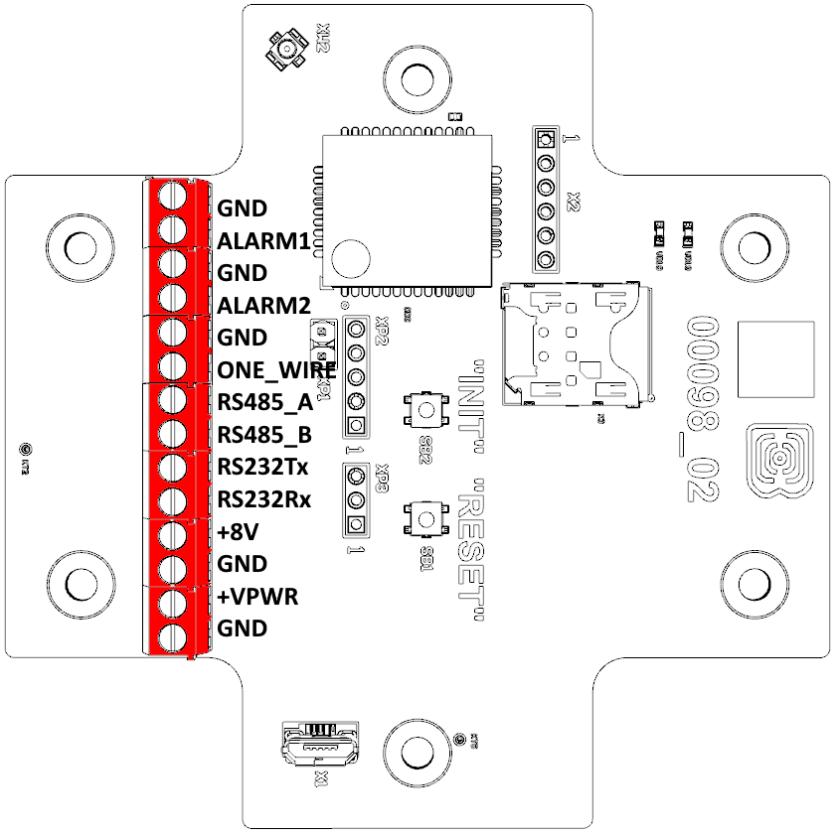

Contacts description is in the table below.

Contact	Naming on the board	Description
1	GND	Ground
2	ALARM1	Security input 1
3	GND	Ground
4	ALARM2	Security input 2
5	GND	Ground
6	ONE_WIRE	Interface 1-Wire
7	RS485_A	Interface RS-485 A
8	RS485_B	Interface RS-485 B
9	RS232Tx	Interface RS-232 Tx
10	RS232Rx	Interface RS-232 Rx
11	+8V	Output power 8 V for external devices
12	GND	Ground
13	+VPWR	External power 5...55 V
14	GND	Ground

RS-232 and RS-485 interface can not be used at the same time. You can change one interface to other through Vega NB-IoT Configurator application.

ModBus device can be connected both via RS-485 and RS-232 interfaces. Below is a connection diagram. To equalize the signal levels when connecting, it is necessary to connect the ground of the devices, thus, for connection, at least 3 wires are required: GND, RS485_A/RS232Tx, RS485_B/RS232Rx.

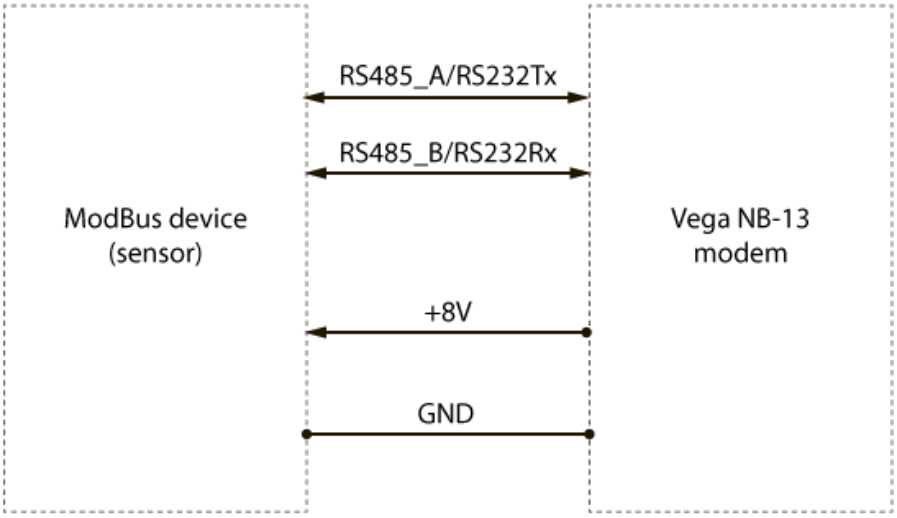

The modem can power up the ModBus device connected to it before polling it, for this use the "+8V" contact.

1-Wire interface allows to connect there up to 10 temperature sensors (see details in part 4).

There are two security inputs on the board. The device monitors status changes on the security inputs and when the security input triggers, the device is activated and sends an alarm message to the network.

HALL SENSOR

The device has Hall sensor which located on the board edge on the bottom side. When the magnet is brought up the sensor triggers, and the device can form the alarm message which is immediately transmitted to the server.

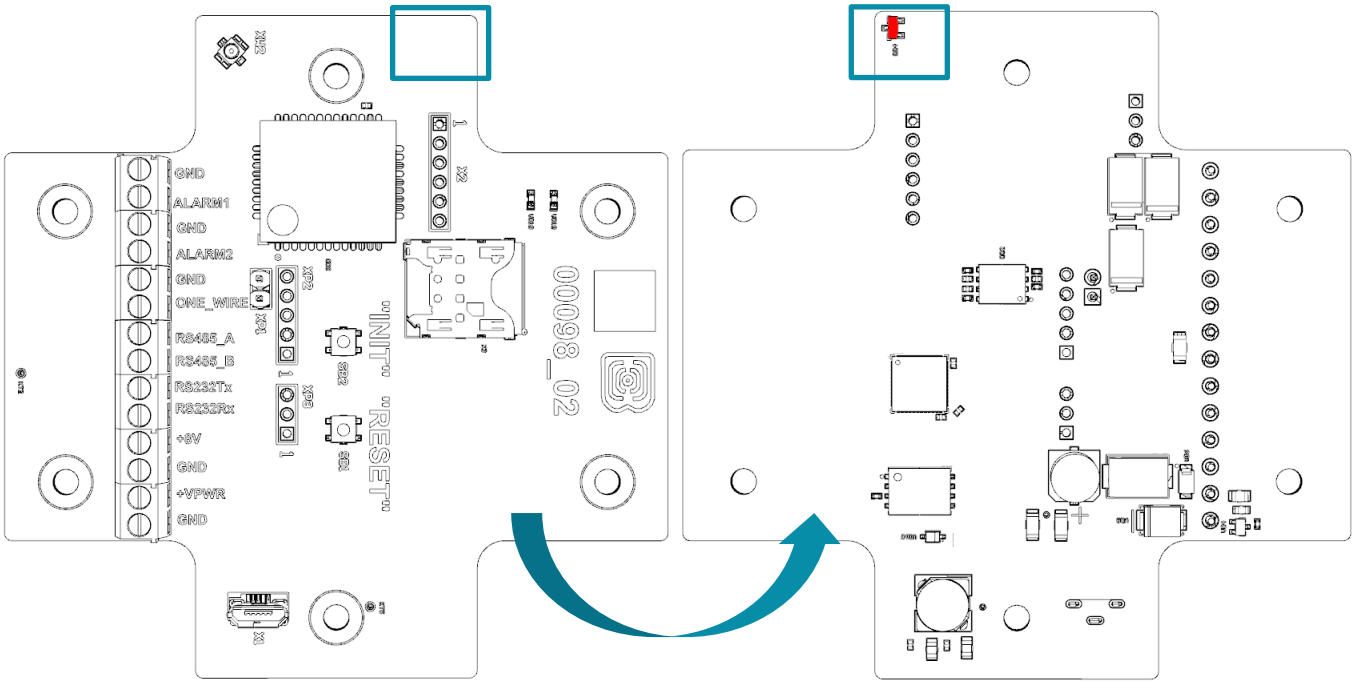

BUTTONS

There are two buttons on the board which can help you to manage the device. Buttons are described in the table below.

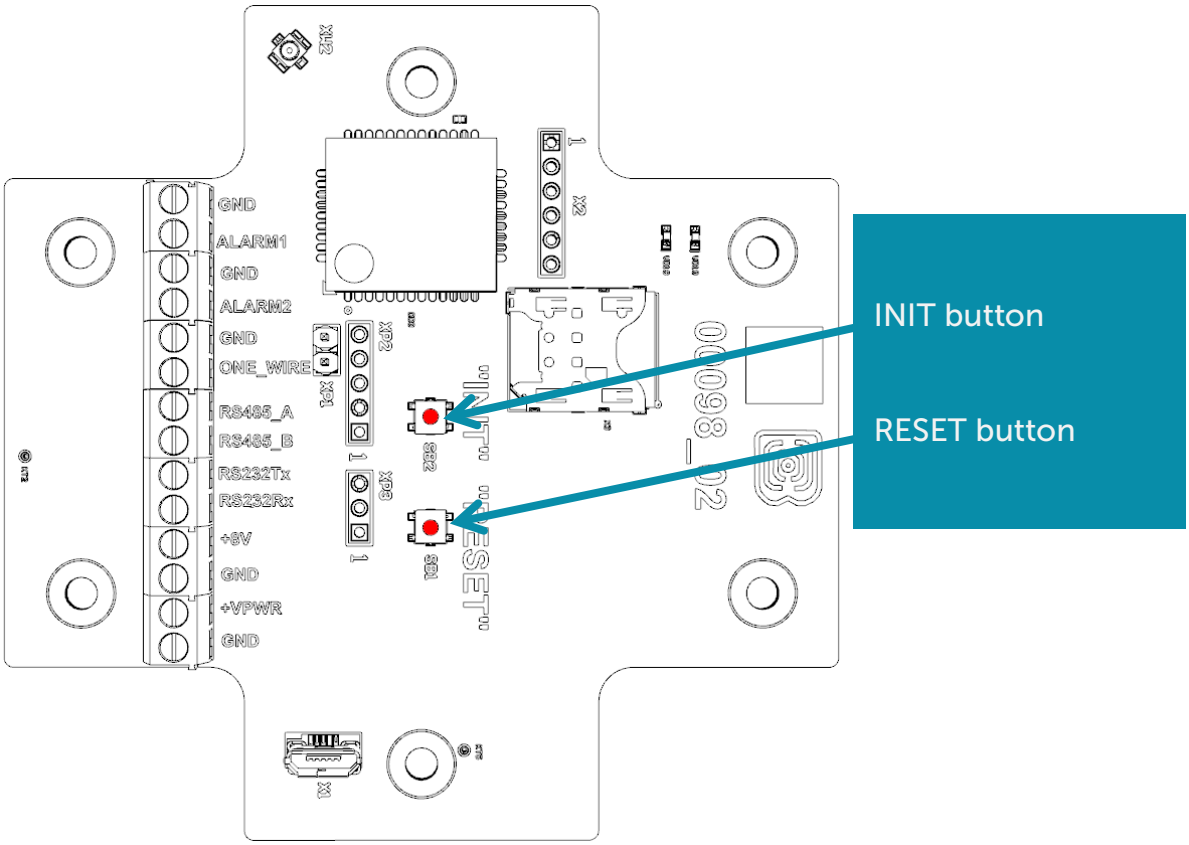

Action	Result
RESET	
Short pressing	Device reloading
INIT	
Pressing for 1 second	Registration at the network
Pressing for 2 seconds	Data transmitting
Pressing for 3 seconds	LTE-modem switching off

When you hold down the button, the red LED starts flashing once a second, which will help you to find out the duration of pressing. Pressing for 1 second corresponds to one flash of the LED, pressing for 2 seconds corresponds to two and so on.

INDICATION

There are two LEDs on the board: red and blue. Blue LED VD19 shows LTE-modem state, and red LED VD18 – the device state.

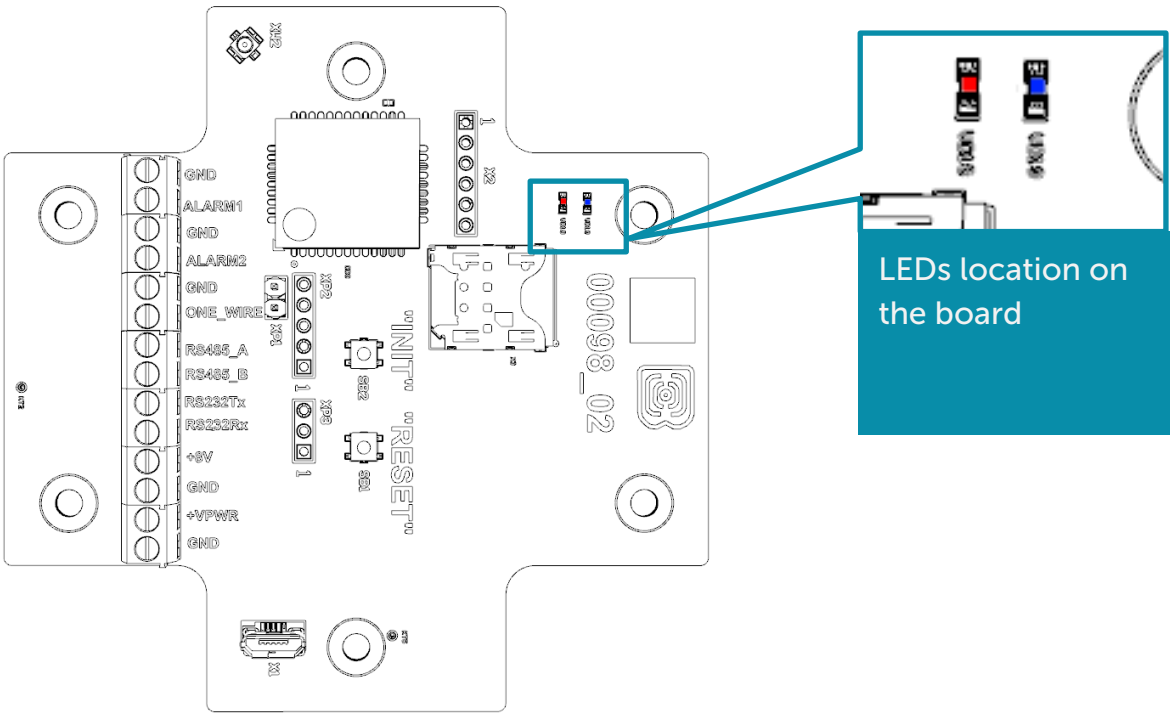

LED signal		Meaning
	LTE-modem	
	Short flash every three seconds	Device search the network
	Short flash every second	Device successfully registered and it is in the network
	Two short flashes every one second	Device transmits data to the network
	No light	LTE-modem switched off
	Device	
	Short flash every five seconds	Device in the 'Operation' mode
	No light	Device in the 'Sleep' mode or switched off

INITIAL STARTUP

Firstly, it is necessary to install SIM into slot on the board and set up the data transmitting with “Vega NB-IoT Configurator” (See part 4).

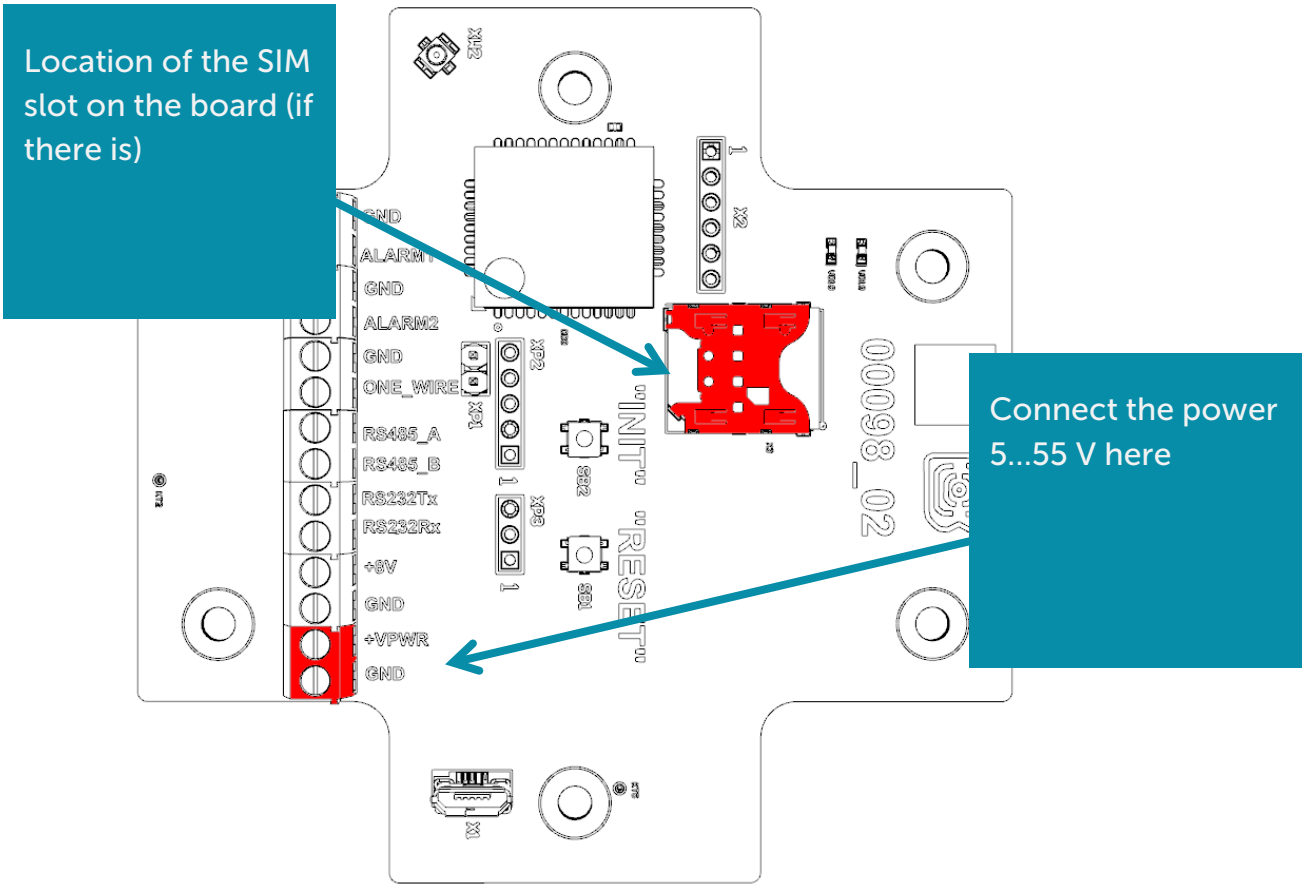

Vega NB-13 modem operate from the external power supply. In “Data collection” mode after power supplying the device loading and sleeps until the communication session according with the schedule.

If you need to test the data transmitting, then press and hold the INIT button for the 2 seconds.

In “Transparent” mode after power supplying the device can open communication session immediately if the time-out for transparent channel session does not set.

CONNECTING VIA USB

The modem can be adjusted with the "Vega NB-IoT Configurator" application through the USB connection (See part 4).

Before connecting the device to the computer for the first time, you must install the driver for the COM port **stsw-stm32102**, which can be downloaded from iotvega.com. After running the executable file **VCP_V1.4.0_Setup.exe**, the installer window will appear:

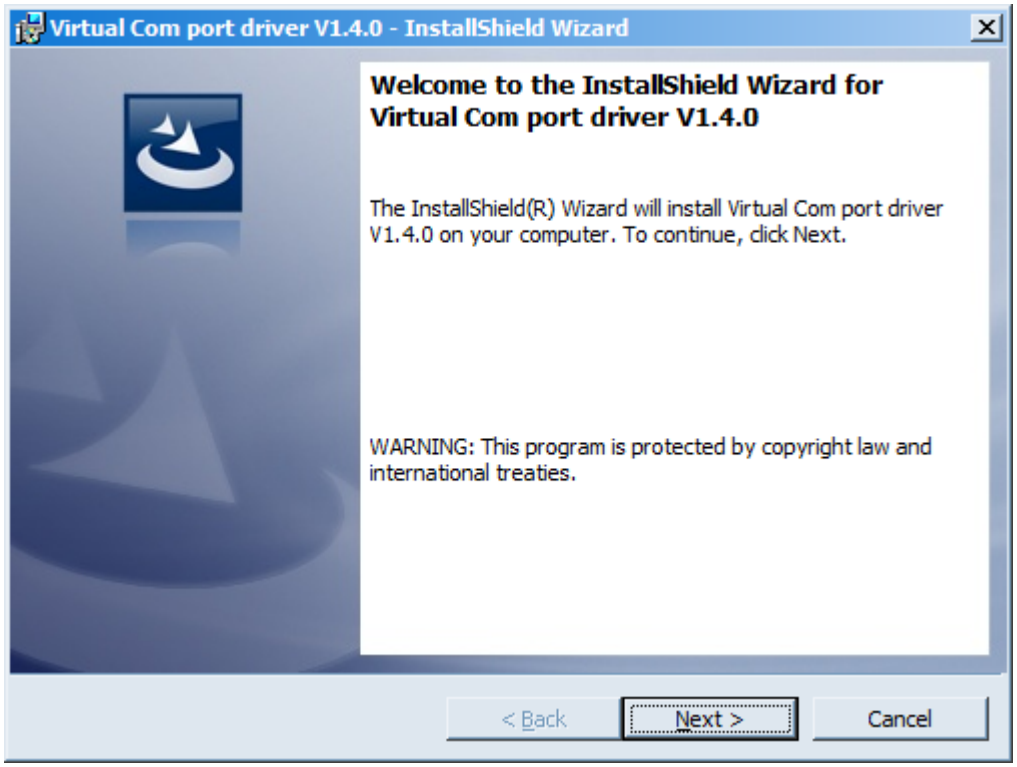

In this window, you need to click **Next**, then **Install**, and then the installation will begin. When the installation is completed successfully, the following screen appears:

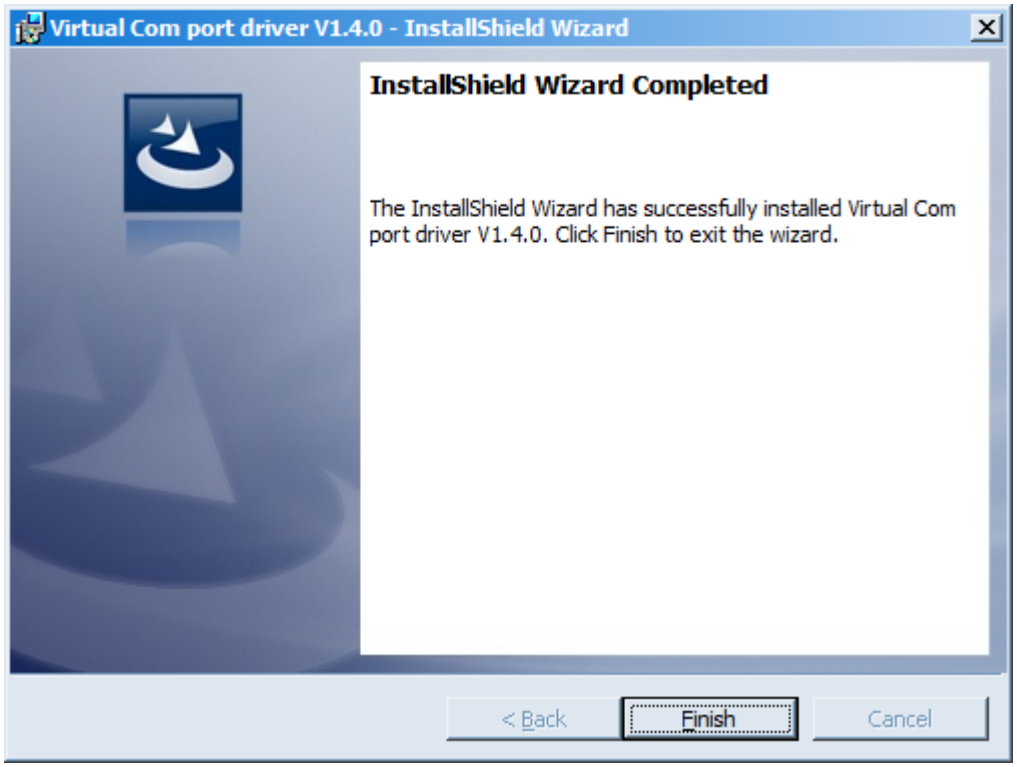

After pressing **Finish** the driver is ready for operation, - it is possible to connect the modem via USB.

4 VEGA NB-IOT CONFIGURATOR

The "Vega NB-IoT Configurator" application (hereinafter referred to as the configurator) is intended for setting up the device via USB.

INTERFACE OF THE APPLICATION

The "Vega NB-IoT Configurator" application does not require the special installation. When the executable file is launched, the window for working with the application appears.

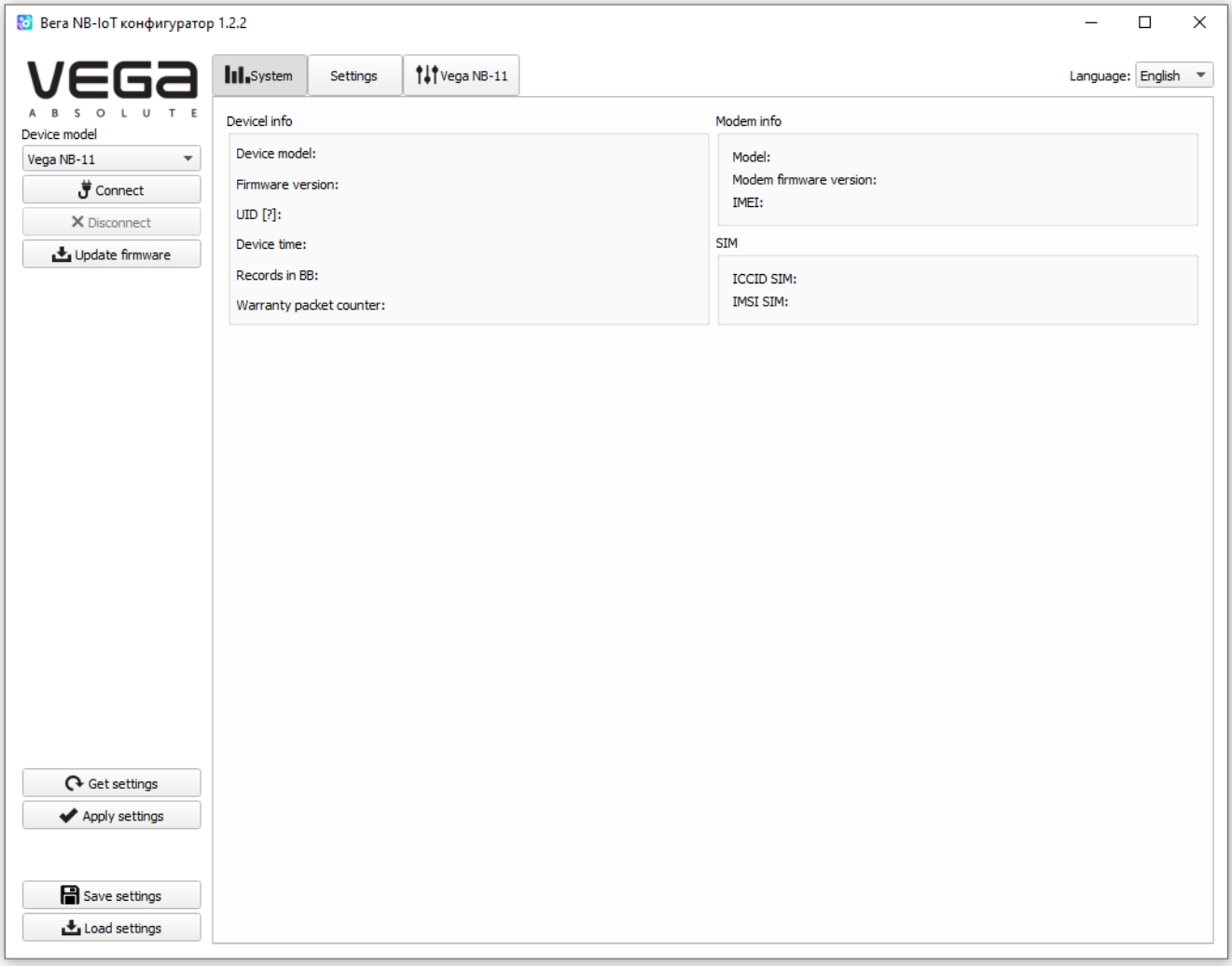

The menu on the left allows you to select the device model, connect to the device or disconnect from it, and update firmware.

The application window contains three tabs – System, Settings and device manage.

CONNECTION TO THE DEVICE

For the connection to the device, perform the following steps:

1. Connect the USB cable to the device.
2. Start the "Vega NB-IoT Configurator" application.
3. Click the "Connect" button in the menu on the left.

The application automatically recognizes the type of device, and the device selection menu becomes inactive.

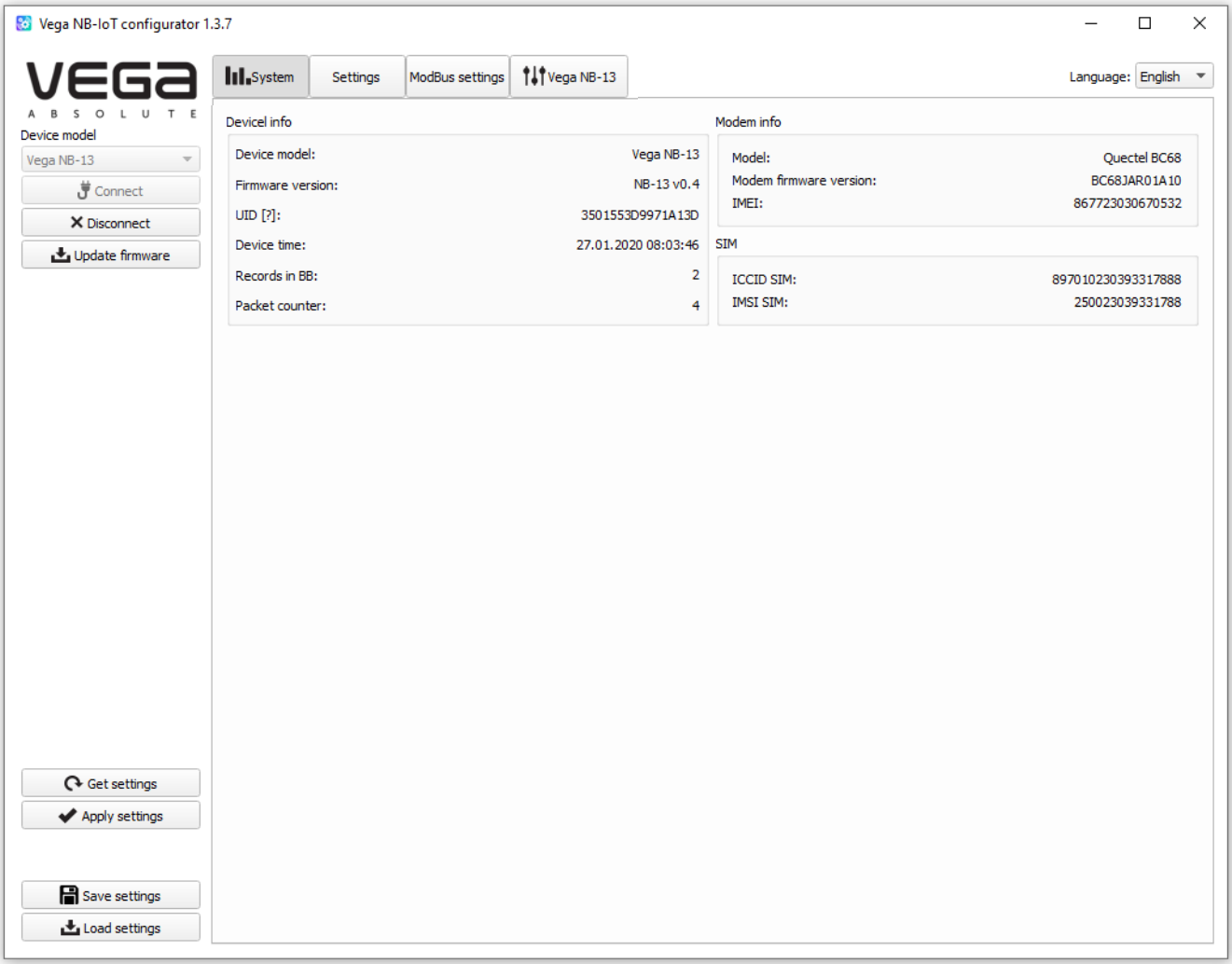

To read the settings from the device, you need to click the "Get settings" button, until this point the application will display the default settings or from the last connected device.

After making the necessary changes to the settings, you should click the "Apply settings" button and only then disconnect from the device with the "Disconnect" button. Also, the application allows to save settings into a file after what you can load it from that file on other similar devices for speed up the debugging process.

"SYSTEM" TAB

The "System" tab displays information about the device, about modem, and SIM.

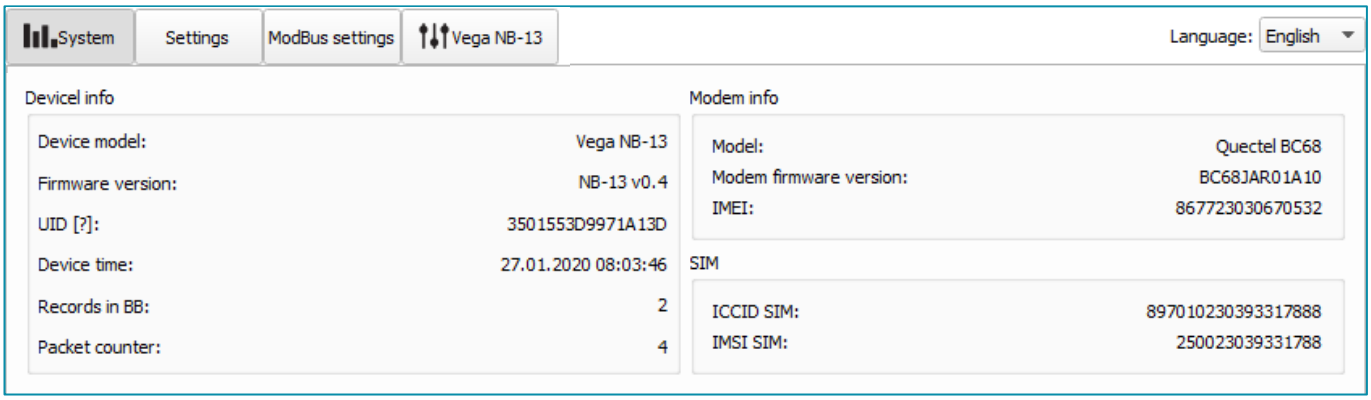

Device info - the configurator reads information about the device model, its firmware and automatically corrects the device's time when connected to it. In that block you can find out the number of records in the black box and the number of packets sent by the device.

Modem info – in that block information about LTE-modem is displayed.

SIM – identifiers of the SIM card (SIM chip).

"SETTINGS" TAB

The "Settings" tab allows to configure various parameters of the network connection and device operation.

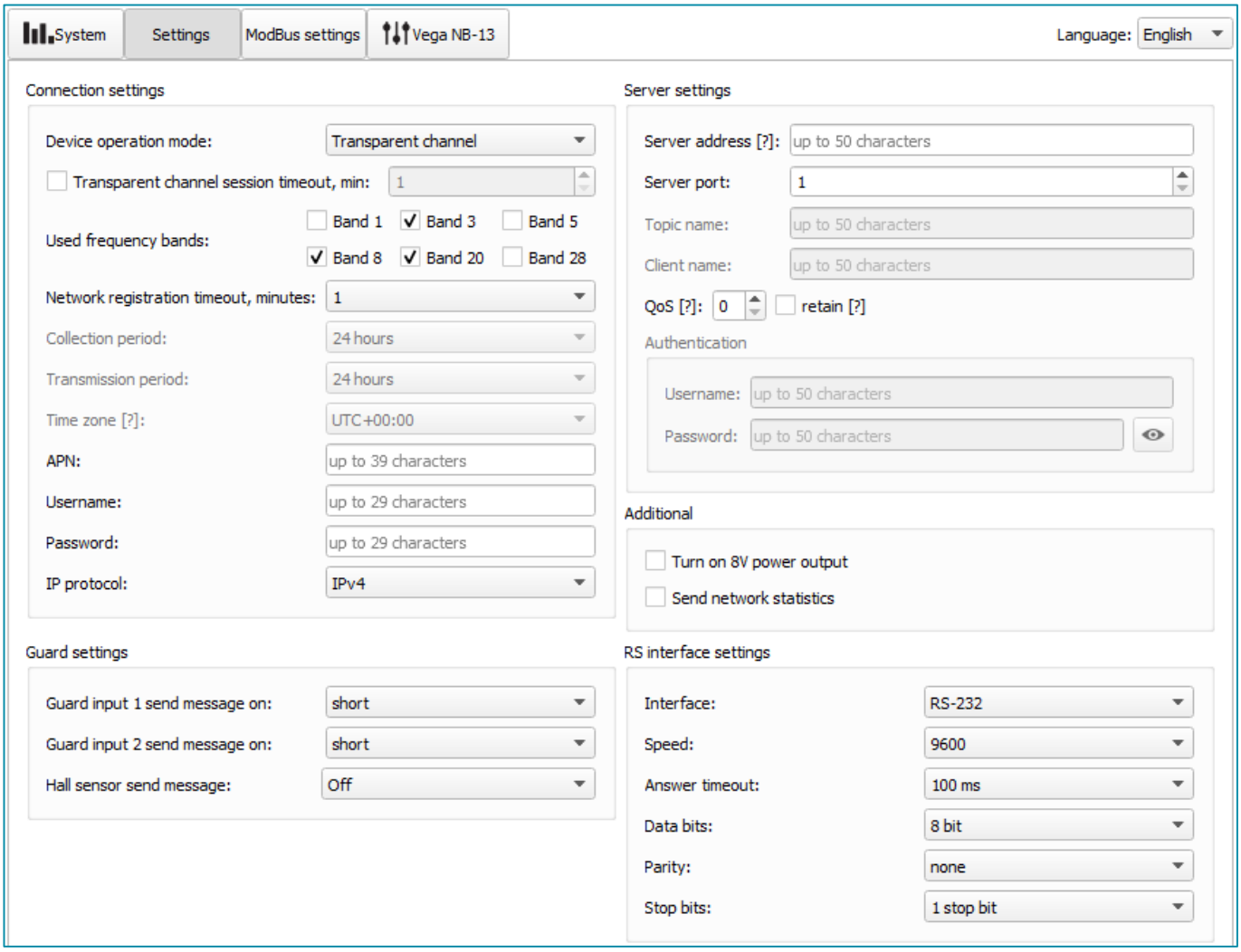

Connection settings – a group of parameters set up the data collection and transmitting.

The *operating mode* determines the nature of the operation of the entire device. In the "Data collection" mode the device periodically collects packets in a black box (non-volatile memory) for further transmitting to the network.

In the "Transparent" mode, the modem opens a transparent radio channel between the device connected via the RS-485/RS-232 interface and the TCP server. After connecting the power, the device immediately opens the communication channel if the timeout of the transparent channel session is not set, and the session is supported indefinitely. If the timeout is set, then the session closes automatically after the timeout. Opening a session can be performed: when the power is connected (only when the timeout is not set), during an event at the security input, by the Hall sensor, by the button (holding up to two LED flashes), by command from the configurator. In transparent channel mode, the modem does not accumulate data in the black box.

Used frequency bands for NB-IoT devices connection can be different for different cellular operators. You can ask the operator about used band or select all the bands.

Network registration timeout – the period after which the modem will fall asleep when registration waiting. For battery economy it's better to set minimal period for which the device can registered in the network in the specific covering conditions.

Cellular operator can give you *APN* or set it by default if the field is empty.

Time zone set up for the data collection period which is equal to the device time (UTC) plus time zone. Transmission period is always use UTC time regardless of the time zone setting.

Readings collected at 00:00 if the collection period is 24 hours; at 00:00 and at 12:00 if the period is 12 hours etc. All readings stored in the device memory until the next communication session.

Transmission period can be equal to 5, 15, 30 minutes, 1, 6, 12 and 24 hours. When beginning of communication session, the device starts sending packets with readings from the earliest packet. The time of data transmitting cannot be specified, it's defined in random way for every device in chosen period of transmission from the moment of connection to the network. For example, transmission period is 30 minutes, and device was started at 16:40 by the internal device clock. In random way the device calculate data transmitting time and set it at 16:41 in the half-hour period from 16:40 to 17:10. Thus, packets from this device will transmit at 16:41, at 17:11, at 17:41, at 18:11 and so on every 30 minutes by the internal device clock.

Guard settings – allows to set up mode of security inputs triggering – when security circuit is short, open or in a both cases.

Server settings – settings of connection with MQTT broker.

Additionally, you can **turn on 8V output** to power external devices. If the checkbox is checked, the output is constantly active, if it is unchecked, the output is not active. If the output is not used, then the check can be removed for energy saving.

Send network statistics - if the box is checked, the modem will add a section with the "CellStatus" key to the JSON message. The section displays information about the base station (through which the modem works) and the quality of the radio signal. If the checkbox is not checked, then the JSON message is not added to the "CellStatus" key. Used to reduce traffic and data transfer time.

RS interface settings - RS-232 or RS-485 interface settings depending on the type of connected device.

"Answer timeout" - timeout between the ModBus requests. The device generates the next read request when the timeout elapsed. Increase time if the device has longer answer delay.

“MODBUS SETTINGS” TAB

The “ModBus settings” tab is used when the ModBus devices are connected.

The modem at the time of polling the sensor can perform up to 10 read operations (requests), at independent addresses. Each read operation can read up to 8 bytes of data (four 16-bit registers or 64-bit registers). This means that the maximum amount of encoder data read out is 80 bytes. For each request, a response timeout is started. If the response is not accepted during the timeout, the modem proceeds to the request at the next address. The timeout is set in the "RS interface settings" section on the "Settings" tab.

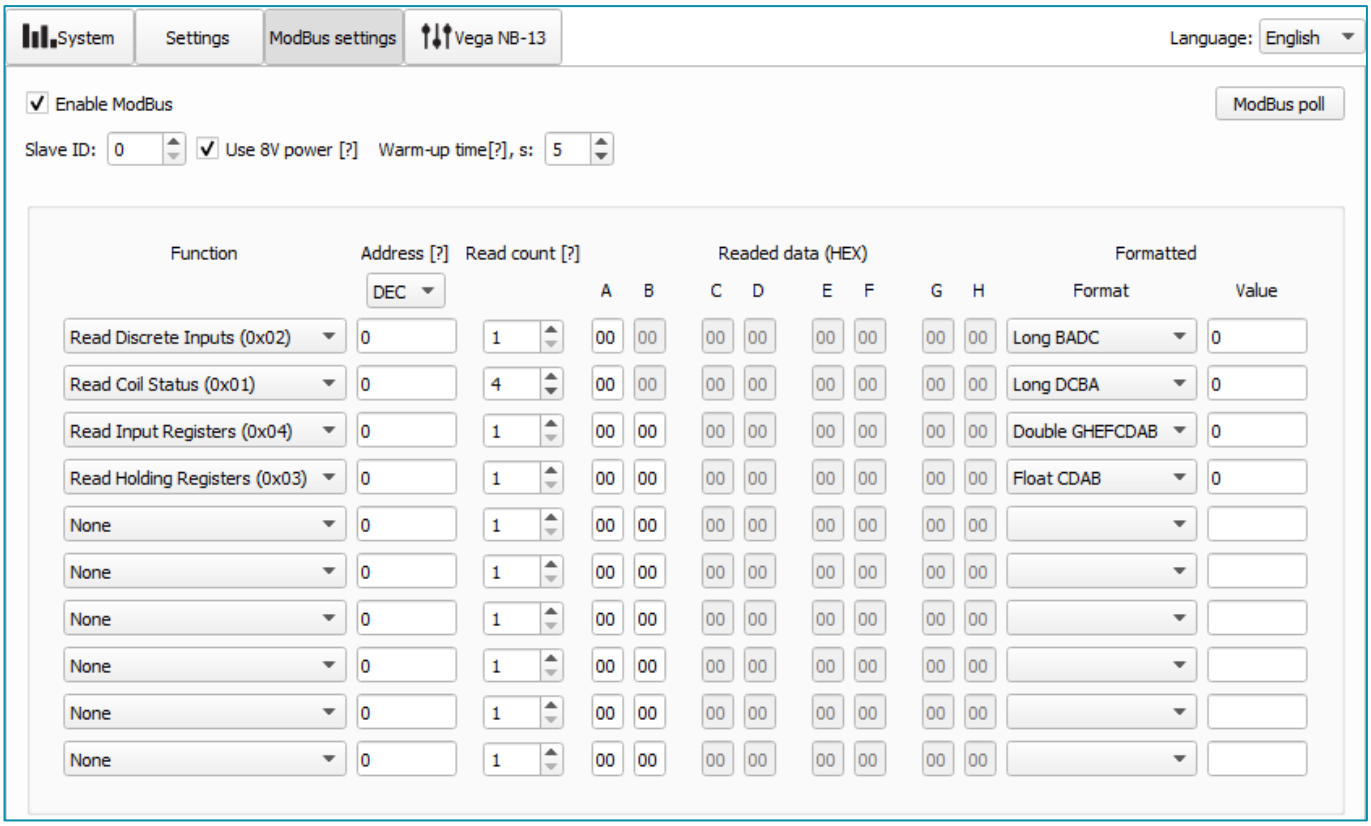

Enable ModBus – activates the ModBus functionality. The modem additionally polls the ModBus device by events and puts the received data into a black box. When sending to the server, the "modbus" key with data is added to the JSON message. If the checkbox is off, the ModBus device is not polled, therefore, ModBus data is not accumulated in the black box, the "modbus" key is missing in the JSON message.

Use 8V power - if the checkbox is checked, the modem supplies power to the "+8V" contact, maintains the time specified in the "Warm-up time" field, and only then polls.

Warm-up time - time in seconds (from 1 to 60) from the moment of power up until the moment of polling. It should be noted that the longer the warm-up time, the greater the consumption of the modem.

ModBus poll - the button allows to poll the ModBus device in real time without adding data to the black box. Can be used to debug ModBus connections. In this case, the request

packets, and the corresponding response packets from the ModBus device are displayed in the Configurator's log completely without any transformations.

Function, Address, Read count - supports configuring up to 10 independent read operations of a ModBus device. For each read operation, you can set the start address of the read, the function, and the number of registers to be read. If the "None" function is selected, then the reading of the corresponding address is not performed. If the function 0x01, 0x02 (read bits) is selected, then the "Read count" field sets the number of read bits (from 1 to 64 bits). If the function 0x03, 0x04 (reading 16-bit registers) is selected, then the "Read count" field sets the number of registers to be read (from 1 to 4 registers).

Read data - the field contains data read from the ModBus device. The data is displayed in cells with the name: A, B, C, D, E, F, G, H. Each cell displays a byte in HEX format. If fewer bytes are read, then unused cells are darkened and "00" is displayed in them.

Format and Value - fields are used for visual display of the read data in the required format in the Configurator. In the ModBus JSON message sent to the server, the data is presented in its original form (HEX) without any transformation, in the same sequence as transmitted in the packet on the RS line. See below for the JSON message format.

The sequence of actions for configuring ModBus:

1. Specify settings on the “Settings” tab of the Configurator.

Specify the "Collect data" operation mode (ModBus works only in this mode). Specify connection settings and server settings. Specify the RS interface settings in accordance with the documentation for the connected ModBus device.

2. Enter the settings on the “ModBus Settings” tab of the Configurator.

Enable ModBus, set the "Function", "Address" and "Read count" parameters.

3. Press the button "Apply settings".

"VEGA NB-13" TAB

The "Vega NB-13" tab contains detail information about the connected device, its sensors, and inputs.

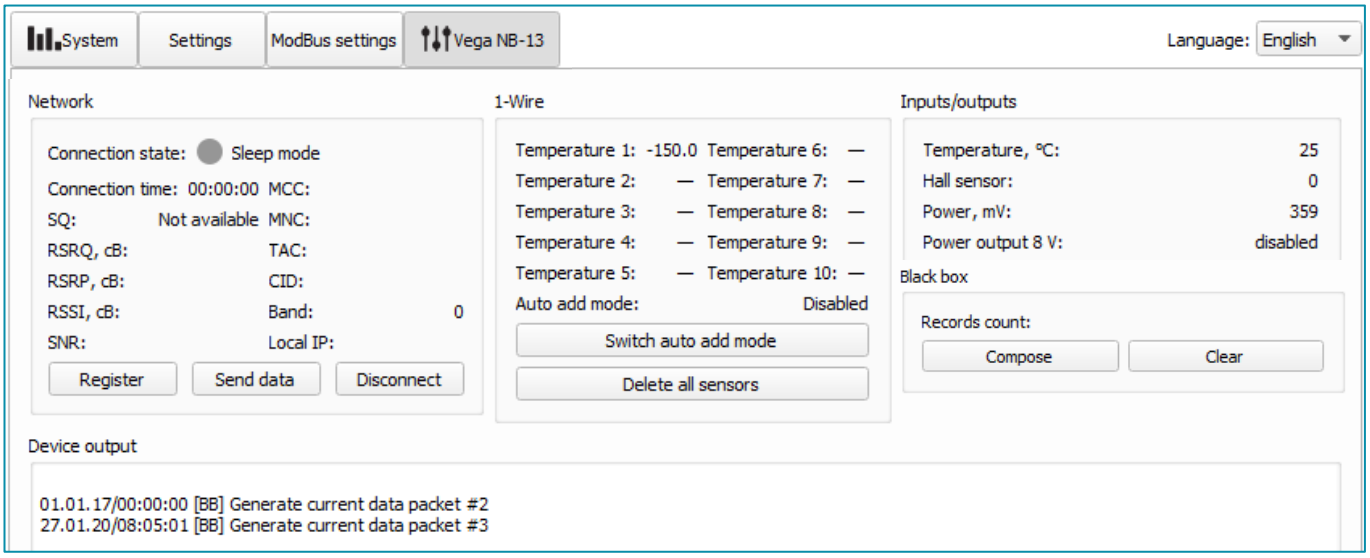

Network – displays the current parameters of the connection and allows to control it. Buttons in this block have logic like INIT button on the board.

SQ parameter – Signal Quality – may be from 0 to 31 while connection is on, and 99 value means the connection absent. Table of values is shown below.

Value in program	Signal Quality, dBm
0	-113 and lower
1	-111
2...30	-109...-53
31	-51 and more
99	No connection
100	-116 and lower
101	-115
102...190	-114...-26
191	-25 and more
199	No connection

1-Wire – settings of connection external temperature sensors and it's readings. For adding a sensor in system, you need to switch ON the auto add mode. Sensors get numbers in order which them were connected. After switching the auto add mode ON the device starts search the new sensors on the bus. When new sensor is found, the device adds it in memory and the auto add mode OFF automatically. To add the next sensor, you need to switch the auto add mode ON again. All sensors may be removed from the memory with button "Delete all sensors".

Inputs/outputs – displays current parameters of the device.

Black box - displays the number of records and contains buttons for managing the contents of the black box, "Generate" - allows to form a packet, i. e. to collect data from all the inputs and put the packet to the black box until the next communication session. "Clear" - by pressing the black box is cleared.

Device output – the device output window displays the device operation log. Events are displayed in the log with time and marker (determines the type of event).

Marker	Transcript	Description
[M]	Modem	Events of the NB-IoT modem operation
[BB]	Black Box	Events of the black box
[SYS]	System	System events
[SE]	Sending Event	Events of the data sending start
[CFG]	Configurator	Events related to the work of the Configurator
[OW]	1-Wire	1-Wire interface events
[CL]	Current loop	Current loop interface events
[MB]	ModBus	ModBus interface events

For example:

14.07.20/11:11:20 [MB] Read completed

Where **14.07.20** is the date of the event; 11:11:20 - time of the event according to the internal clock of the modem; [MB] - the mareker indicates that this is an event of the ModBus interface; Read completed - the process of reading the ModBus device is completed.

The process of polling the ModBus device is also displayed in the configurator log. The Tx request packet and the response packet are presented in one line:

Tx0: 01 03 00 00 00 02 c4 0b> Rx0: 01 03 04 30 2e 0d 60 91 82> OK

If the reading is not completed due to a response timeout, then the log displays "timeout". If the ModBus device responded with an error code, then “error” is displayed in the log. If the reading was successful, then the log displays "OK".

5 COMMUNICATION PROTOCOL

DATA COLLECTION MODE

Data transmits via MQTT protocol. You should to specify in the device settings the address and port of the server where the data will be sent. Those settings specified in application "Vega NB-IoT Configurator". It must be MQTT broker as a server (received side). You should to specify in the device settings the address and port of the broker. Also, you should to specify a topic name where the data published and a client name – the name which the device use for publishing. All those settings specified in "Vega NB-IoT Configurator" in part "MQTT settings". For watching the data sending by the device you should to deploy MQTT broker on a PC and subscribe some application on MQTT broker.

Vega NB-13 sends the message on the server as a text of JSON format. See example below.


```
{
 "Message": {
  "dev": "NB-13 v0.4",
  "IMEI": "867723030670532",
  "IMSI": "250023039331783",
  "ICCID": "897010230393317839",
  "num": 25,
  "UTC": 1576817755
 },
 "CellStatus": {
  "TAC": "13A8",
  "CID": "083DA429",
  "SQ": 27,
  "EARFCN": 3648,
  "PCID": 492,
  "RSRP": -610,
  "RSRQ": -108,
  "RSSI": -581,
  "SNR": 263
 },
 "Telemetry": {
  "reason": "time",
  "UTC": 1576760400,
  "supply": 6.49,
  "temp": 25,
  "s_alarm1": 1,
  "s_alarm2": 1,
  "s_magnet": 0,
  "s_outpwr": 0,
  "onewire": [25.3, 25.1, 24.9]
  "modbus": {
```

```
      "0": {                          // The first reading operation
        "f": 3,                       // with ModBus functionality code 0x03
        "a": 2056,                    // at the ModBus register address 2056 in DEC format
        "d": "00E30F7812345678"       // Read data in HEX format - 8 bytes
      },
      "1": {                          // The second reading operation
        "f": 3,
        "a": 4,
        "d": "1110222033304440"
      },
      "2": {                          // The third reading operation
        "f": 3,
        "a": 8,
        "d": "5550666077778880"
      },
...
      "9": {                           // The tenth reading operation
        "f": 3,
        "a": 36,
        "d": "9990101020203030"
      }
    }
  }
}
```

Transcription of the message fields:

Message – part with information about current message.

- **dev** – name and version of the device firmware
- **IMEI** – LTE-modem identifier
- **IMSI, ICCID** – SIM-card (SIM-chip) identifiers
- **num** – the number of the message
- **UTC** – the date and the time of message sending in UTC format by Greenwich

CellStatus – part with information about the cellular state

- **TAC, CID** – gateway identifiers
- **SQ** – gateway signal quality
- **EARFCN** – the number of radio frequency channel (absolute)
- **PCID** – physical network address
- **RSRP** – input signal power (in centibels[1])
- **RSRQ** – input signal quality (in centibels[1])
- **RSSI** – indicator of the input signal power (in centibels[1])
- **SNR** – signal to noise ratio

[1] Decibel multiplied by 10

The "Send network statistics" setting on the "Settings" tab in the Configurator is responsible for sending information about the network and is used to reduce traffic and data transfer time. If the checkbox is checked, the modem will add a section with the "CellStatus" key to the JSON message. If the box is not checked, then the "CellStatus" key is not added to the JSON message.

Telemetry – part with collected data (one packet)

reason – reason for packet forming*

UTC – the date and the time of message collecting in UTC format by Greenwich

supply – power voltage in Volt

temp – processor temperature

onewire – values of temperatures of sensors on 1-Wire bus

s_alarm1 – state of ALARM1 input at the time of data slice ("0" - logic zero input, "1" - logic one input)

s_alarm2 – state of ALARM2 input at the time of data slice ("0" - logic zero input, "1" - logic one input)

s_magnet – the presence of an external magnetic field at the time of data slice ("0" - absent, "1" - presence)

s_outpwr – activity of power output 8 V ("0" – power output is disabled, "1" – power output is abled)

If ModBus is enabled in the modem settings and the polling is successful, then the “modbus” key is added to the “Telemetry” section of the JSON message. If ModBus is disabled in the settings, or there is no connection with the sensor, then the ModBus data is not added to the black box record and, accordingly, is not displayed in the JSON message.

Up to 10 read operations can be displayed inside the "**modbus**" key, each of which contains the following JSON keys:

Key "f" - function code

Key "a" - starting address of reading in DEC format

Key "d" - read data in HEX format. The minimum size of the read data is 1 byte, the maximum is 8 bytes.

TRANSPARENT MODE

In transparent mode, the modem opens and maintains a session with the server. During the session, the packets received from the server are transmitted by the modem to the device, the packets from the device are transmitted to the server. The device can be connected via RS485, RS232 interfaces. The exchange packets have a specific format.

1. Data transmitting format for transparent mode for server-to-device and device-to-server packets.

Offset	Size, byte	Description	Range of values
0	1	Transparent packet ID (0x05)	-
1	1	Packet type	-
2	2	Packet size (little-endian)	1...1024
4	1-1024	Transmitting data	-

Types of packets for transparent channel

Packet type	Description
0x02	Server-to-device packet
0x03	Device-to-server packet. Send data from the port RS485/RS232. S
0x0B	Identity packet includes IMEI and ICCID. Modem sends this packet to the server when communication session is open.
0x04	Server-to-device packet with packet ID and device response timeout
0x05	Device-to-server packet with packet ID

1) Example of identification packet:
050B1000C4AC018330150300CF297C4E0DD2720C

Transparent packet ID	Packet type	Data size	Modem IMEI	ICCID of SIM
0x05	0x0B	0x0010	0x000315308301ACC4	0x0C72D20D4E7C29CF

Device IMEI and ICCID in this packet are represented as hexadecimal unsigned long (64 bit) in byte format little-endian. For example, IMEI 0x000315308301ACC4 = 867723030670532 Dec.

2) Example of server-to-device packet:
05020800010300010001D5CA

Transparent packet ID	Packet type	Data size	Data sent to the port RS485/RS232
0x05	0x02	0x0008	0x010300010001D5CA

3) Example of device-to-server packet
05030700010302 4567CB3E

Transparent packet ID	Packet type	Data size	Data sent from the port RS485/RS232
0x05	0x03	0x0007	0x0103024567CB3E

2. Format of data transfer from server to device with packet ID.

The server sends a request packet with ID to the device and waits for a response from the device with the same ID within the specified timeout.

Offset	Size, byte	Description	Range of values
0	1	Transparent packet ID (0x05)	-
1	1	Packet type	-
2	2	Packet size (little-endian)	
4	2	Packet ID	0 - 0xFFFF
6	4	Timeout in ms	10 - 0xFFFFFFFF
10	2	Data length	1 - 1024
12	1 - 1024	Data	-

Packet example:
05040C00EEAAD00700000400FF1122FF

Transparent packet ID	Packet type	Packet size	Packet ID	Timeout	Data length	Data send to the device
0x05	0x04	0x000C	0xAAEE	0x000007D0	0x0004	0xFF1122FF

3. Format of data transfer from device to server with packet ID

Offset	Size, byte	Description	Range of values
0	1	Transparent packet ID (0x05)	-
1	1	Packet type	-
2	2	Packet size (little-endian)	
4	2	Packet ID	0 - 0xFFFF
6	2	Data length; it's may be equal to zero - that means the data was not received during timeout	0 - 1024
8	1 - 1024	Data	-

Packet example:
05050C00EEAA0800F0F1F2F3F4F5F6F7

Transparent packet ID	Packet type	Packet size	Packet ID	Data length	Data send to the server
0x05	0x05	0x000C	0xAAEE	0x0008	0xF0F1F2F3F4F5F6F7

6 STORAGE AND TRANSPORTATION REQUIREMENTS

Vega NB-13 modem shall be stored in the original packaging in heated room at temperatures +5°C to +40°C and relative humidity less than 85%.

The modem shall be transported in covered freight compartments of all types at any distance at temperatures -40°C to +85°C.

7 CONTENT OF THE PACKAGE

The modem is delivered complete with:

Vega NB-13 modem – 1 pc.

Antenna – 1 pc.

Factory certificate – 1 pc.

8 WARRANTY

The warranty period for the device is 5 years from the date of sale.

The manufacturer is obligated to provide repair services or replace the failed device during the entire warranty period.

The consumer is obliged to comply with the conditions and rules of transportation, storage and operation specified in this user manual.

Warranty does not apply to:

- the device with mechanical, electrical and / or other damages and defects caused by violation of the transportation, storage and operation requirements;

- the device with traces of repair performed not by the manufacturer's service center;

- the device with traces of oxidation or other signs of liquids leaking inside the device.

In the event of a warranty claim, contact the service center:

113/1, Kirova Str., Novosibirsk, 630008, Russia.

Tel.: +7 (383) 206-41-35.

vega-absolute.ru

User Manual © Vega-Absolute OOO 2019-2020