Cisco LTE/5G on Cisco 1000 Series Integrated Services Router

This chapter provides an overview of the software features and configuration information for Cisco LTE/5G on the Cisco 1000 Series Integrated Services Router (ISR).

For information on Cisco 3G/4G LTE and LTEA Omnidirectional Dipole Antenna (LTE-ANTM-SMA-D), see the Cisco 4G LTEA, 4G LTE, and 3G LTE-ANTM-SMA-D section.

For more information on Cisco LTE/5G SKUs, faceplates, and LED descriptions, see the Cisco 1000 Series Integrated Services Router (ISR) Hardware Installation Guide.

- Finding Feature Information, on page 1
- Overview of Cisco LTE/5G , on page 2
- Prerequisites for Configuring Cisco LTE/5G, on page 4
- Restrictions for Configuring Cisco LTE/5G , on page 4
- Features not Supported in Cisco LTE/5G, on page 4
- Cisco LTE/5G Features, on page 5
- Configuring Cisco LTE/5G, on page 15
- Configuring Cellular Modem Link Recovery , on page 44
- Verifying the Cellular Modem Link Recovery Configuration , on page 46
- Configuration Examples for 3G and 4G Serviceability Enhancement, on page 48
- Configuration Examples for LTE/5G, on page 49
- Upgrading the Modem Firmware, on page 58
- SNMP MIBs, on page 61
- Troubleshooting, on page 63
- Additional References, on page 70

Finding Feature Information

Your software release may not support all the features documented in this module. For the latest feature information and caveats, see the release notes for your platform and software release.

Use Cisco Feature Navigator to find information about platform support and Cisco software image support. To access Cisco Feature Navigator, go to http://www.cisco.com/go/cfn . An account on Cisco.com is not required.

Overview of Cisco LTE/5G

Cisco LTE/5G supports the following modes:

- **4G LTE** —4G LTE mobile specification provides multi-megabit bandwidth, more efficient radio network, latency reduction, and improved mobility. LTE solutions target new cellular networks. These networks initially support up to 300 Mb/s peak rates in the downlink and up to 50 Mb/s peak rates in the uplink. The throughput of these networks is higher than the existing 3G networks.
- **3G Evolution High-Speed Packet Access (HSPA/HSPA+)** —HSPA is a UMTS-based 3G network. It supports High-Speed Downlink Packet Access (HSDPA) and High-Speed Uplink Packet Access (HSUPA) data for improved download and upload speeds. Evolution High-Speed Packet Access (HSPA+) supports Multiple Input/Multiple Output (MIMO) antenna capability.

The following table describes the Cisco 4G LTE Cat 6 SKUs:

Table 1: Cisco 4G LTE Cat 6 SKUs

Region Theaters	Cisco LTE Advanced 3.0 LTEEA SKU (European Union, North America)	Cisco LTE Advanced 3.0 LTELA SKUs (Latin America, Asia-Pacific)
Bands	LTE bands 1-5, 7, 12, 13, 20, 25, 26, 29, 30, and 41 FDD LTE 700 MHz (band 12), 700 MHz (band 29), 800 MHz (band 20), 850 MHz (band 5 CLR), 850 MHz (band 26 Low), 900 MHz (band 8), 1800 MHz (band 3), 1900 MHz (band 2), 1900 MHz (PCS band 25), 1700 MHz and 2100 MHz (band 4 AWS), 2100 MHz (band 1), 2300 MHz (band 30), or 2600 MHz (band 7) TDD LTE 2500 MHz (band 41) Carrier aggregation band combinations: 1+8; 2+(2,5,12,13,29); 3+(7,20); 4+(4,5,12,13,29); 7+(7,20); 12+30, 5+30, and 41+41	LTE bands 1, 3, 5, 7, 8, 18, 19, 21, 28, 38, 39, 40, and 41 FDD LTE 700 MHz (band 28), 850 MHz (band 5 CLR), 850 MHz (bands 18 and 19 Low), 900 MHz (band 8), 1500 MHz (band 21), 1800 MHz (band 3), 2100 MHz (band 1), or 2600 MHz (band 7) TDD LTE 1900 MHz (band 39), 2300 MHz (band 40), 2500 MHz (band 41), or 2600 MHz (band 38) Carrier aggregation band combinations: 1+(8,18,19,21); 3+(5,7,19,28); 7+(5,7,28); 19+21, 38+38, 39+39,40+40, and 41+41

The following figure explains the 4G LTE packet core network architecture.

Figure 1: 4G LTE Packet Core Network Architecture

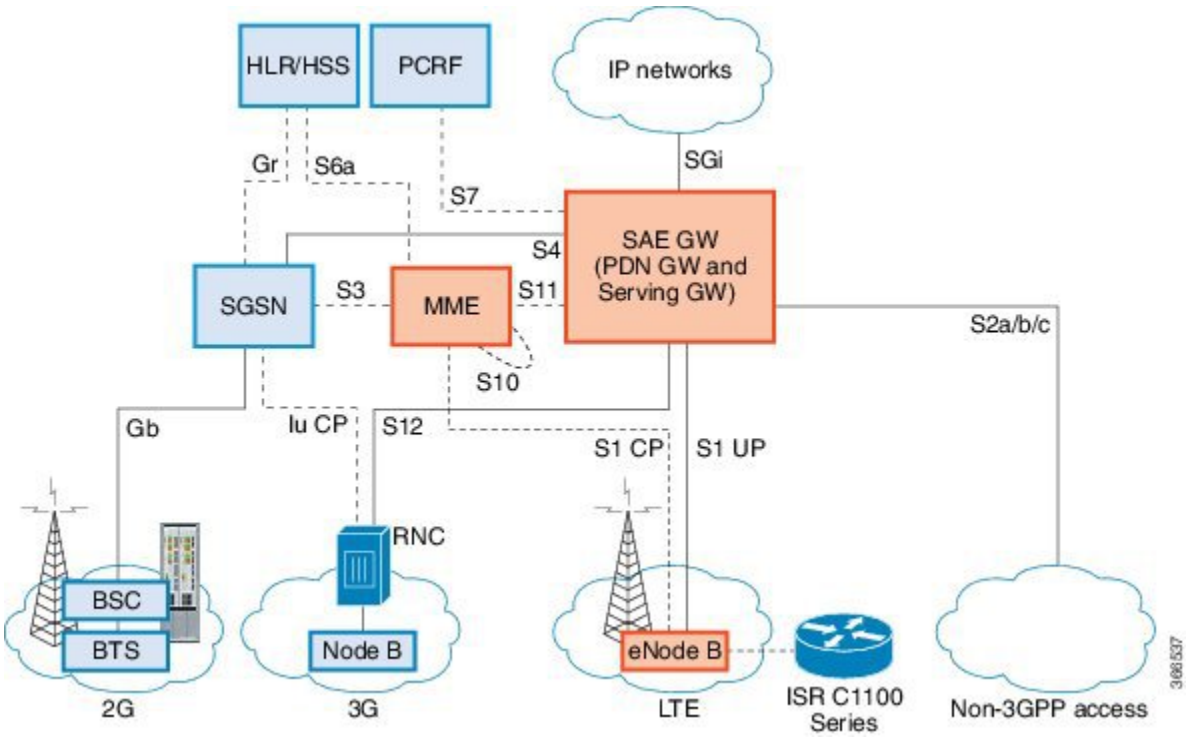

Gateways	The Serving Gateway (SGW) routes and forwards user data packets, while also acting as the mobility anchor for the user plane, and is the anchor for mobility between LTE and other 3GPP technologies. The Packet Data Network (PDN) Gateway (PGW) provides connectivity from the User Equipment (UE) to external packet data networks by being the point of exit and entry of traffic for the UE. A UE may have simultaneous connectivity with more than one PGW for accessing multiple PDNs. The PGW performs policy enforcement, packet filtering for each user, charging support, lawful interception, and packet screening. Another key role of the PGW is to act as the anchor for mobility between 3GPP and non-3GPP technologies such as WiMAX and 3GPP2 (CDMA 1X and EvDO). The System Architecture Evolution GW (SAE GW) is the entity that covers the PGW and SGW functionality in the Evolved Packet Core (EPC).
RNC	The Radio Network Controller (RNC) is responsible for controlling the Radio Access Network (RAN) that are connected to it. The RNC carries out radio resource management and some of the mobility management functions and is the point where encryption is done before user data is sent to and from the mobile. The RNC connects to the Circuit-Switched Core Network through the Media Gateway (MGW).
BTS	Base Transceiver Station.
BSC	Base Station Controller.
SGSN	Service GPRS Support Node.

Prerequisites for Configuring Cisco LTE/5G

- If the signal is not good at the router, use the Cisco offered antenna accessories and extension cables to place the antenna away from router in a better coverage area.
- You must have LTE/5G network coverage where your router is physically placed. For a complete list of supported carriers.
- You must subscribe to a service plan with a wireless service provider and obtain a Subscriber Identity Module (SIM) card. Only micro SIM is supported.
- You must install the SIM card before configuring the LTE/5G on Cisco C1100 series router.
- The standalone antenna that supports GPS capabilities must be installed for the GPS feature to work. See the Cisco 4G Indoor/Outdoor Active GPS Antenna (GPS-ACT-ANTM-SMA) document for installation information.

Restrictions for Configuring Cisco LTE/5G

- Currently, cellular networks support only user initiated bearer establishment.
- Due to the shared nature of wireless communications, the experienced throughput varies depending on the number of active users or congestion in a given network.
- Cellular networks have higher latency compared to wired networks. Latency rates depend on the technology and carrier. Latency also depends on the signal conditions and can be higher because of network congestion.
- CDMA-EVDO, CDMA-1xRTT, and GPRS technology modes are not supported.
- Any restrictions that are part of the terms of service from your carrier.
- SMS—Only one text message up to 160 characters to one recipient at a time is supported. Larger texts are automatically truncated to the proper size before being sent.
- It is strongly recommended that you configure SNMP V3 with authentication/privacy.

Features not Supported in Cisco LTE/5G

The following features are not supported on Cisco LTE/5G C1100 Series ISR, when compared to Classic IOS:

- TTY support or Line
- Chat script/dialer string
- External Dialer
- DM log output to USB flash is not supported.

Cisco LTE/5G Features

Cisco LTE/5G supports the following major features:

- Global Positioning System (GPS) and National Marine Electronics Association (NMEA) streaming.
- Short Message Service (SMS)
- 3G/4G Simple Network Management Protocol (SNMP) MIB
- SIM lock and unlock capabilities
- Dual SIM
- Auto SIM
- NeMo
- Public Land Mobile Network (PLMN) selection
- IPv6
- Multiple PDN
- LTE Link Recovery

The following sections explains the Cisco LTE/5G features:

4G GPS and NMEA

Active GPS is supported on the SubMiniature version A (SMA) port. Active GPS antenna is supported only in the standalone mode. An Active GPS antenna includes a built-in Low-Noise Amplifier that provides sufficient gain to overcome coaxial cable losses while providing the proper signal level to the GPS receiver. Active GPS antennae require power from the GPS receiver SMA port to operate. See the Example: Connecting to a Server Hosting a GPS Application, on page 6 for more information.

National Marine Electronics Association (NMEA) streams GPS data either from a LTE/5G through a virtual COM port and a TCP/IP Ethernet connection to any marine device (such as a Windows-based PC) that runs a commercially available GPS-based application.

The following GPS and NMEA features are supported on the Cisco LTE/5G:

- GPS standalone mode (satellite-based GPS)
- Cisco IOS CLI display coordinates.
- External application displays router map location
- Objects in the CISCO-WAN-3G-MIB supports GPS and NMEA features
- The Cisco LTE/5G only supports NMEA over IP and uses show commands in the platform

Note Assisted GPS mode is not supported.

For instructions on setting up the GPS antenna, see the Cisco 4G Indoor/Outdoor Active GPS Antenna (GPS-ACT-ANTM-SMA) document.

Example: Connecting to a Server Hosting a GPS Application

You can feed the NMEA data to a remote server that hosts the GPS application. The server can be connected to the router either directly using an Ethernet cable or through a LAN or WAN network. If the application supports serial port, run a serial port emulation program to create a virtual serial port over the LAN or WAN connection.

Note Microsoft Streets & Trips is a licensed software that you can download from the Microsoft website.

To connect a Cisco LTE/5G through IP to a PC running Microsoft Streets & Trips, perform the following steps:

1. Connect the PC to the router using an Ethernet cable.
2. Ensure that the PC and router can ping.
3. Launch the serial port redirector on the PC.
4. Create a virtual serial port that connects to the NMEA port on the router.
5. Launch **Microsoft Streets & Trips** on your PC.
6. Select the GPS Menu.
7. Click Start Tracking.
8. If you have acquired a location fix from the **show cellular 0/2/0 gps** command output on the router, the current location is plotted on the graph, and a reddish brown dotted cursor with a circle around it is seen on the map.

Note If you have not acquired a location fix, the Microsoft application times out and disconnects.

Dual SIM Card

SIM card primary slot is selected when router boots up or when NIM reloads. The default slot is 0. If SIM card is not present in the primary slot, select the alternative slot if SIM card is present.

```
controller cellular 0/2/0
lte sim primary slot <slot#>
```

If the active SIM card loses connectivity to the network a failover to the alternative SIM card slot occurs.

By default the failover timer is two minutes. The failover timer can be set from 1 to 7 minutes.

```
controller cellular 0/2/0
lte failovertimer <3-7>
```

You can also manually switch the SIM slot via the command line interface.

```
cellular 0/2/0 lte sim activate slot <0-1>
```

Auto SIM

The Auto SIM feature detects the SIM and loads the corresponding firmware. For example, if a Verizon SIM is detected, the modem loads the Verizon firmware. If you switch the SIM to an ATT SIM, the modem will load ATT firmware.

When Auto-SIM is enabled, it is said to be in Auto-SIM mode and when disabled, it is known as Manual mode. In Auto-SIM mode, the modem selects the right carrier firmware from the list of firmware's available. When in manual mode, you can select the firmware manually. Modem resets every time you make a config change from Auto-SIM enabled to disabled or vice-versa.

Note Auto SIM is always enabled by default.

Enable Auto SIM

Procedure

	Command or Action	Purpose
Step 1	**configure terminal** **Example:** `Router# configure terminal`	Enters configuration mode.
Step 2	**Cellular** *slots/sub-slots/interface* **lte firmware-activate** *firmware-index* **Example:** `Router(config)# Cellular 0/2/0 lte firmware-activate 1`	Activates the firmware index. **Note** For the LTE/5G, the *unit* argument identifies the slot, subslot, and the interface separated by slashes (0/2/0).

Example: List the firmware when Auto-SIM is Enabled

```
Device# show cellular 0/2/0
firmware          Idx Carrier      FwVersion      PriVersion   Status
 1   ATT          192.0.2.1        002.035_000  Inactive
 2   GENERIC      192.0.2.2        002.035_000  Active
 3   ROGERS       192.0.2.3        001.012_000  Inactive
 4   SPRINT       192.0.2.4        002.012_000  Inactive
 5   VERIZON      192.0.2.5        002.042_000  Inactive

Firmware Activation mode  =  AUTO
```

Disable Auto SIM

Procedure

	Command or Action	Purpose
Step 1	**configure terminal** **Example:** `Router# configure terminal`	Enters configuration mode.
Step 2	**controller cellular** *slots/sub-slots/interface* **Example:** `Router(config)# controller cellular 0/2/0`	Specifies the controller interface.
Step 3	**no lte firmware auto-sim** **Example:** `Router(config-if)# no lte firmware auto-sim`	Disable auto SIM.

Example: List the firmware when Auto-SIM is Disabled

```
Device# show cellular 0/2/0 firmware
 Idx Carrier      FwVersion    PriVersion   Status
 1   ATT          192.0.2.1  002.035_000  Active
 2   GENERIC      192.0.2.2  002.035_000  Inactive
 3   ROGERS       192.0.2.3  001.012_000  Inactive
 4   SPRINT       192.0.2.4  002.012_000  Inactive
 5   VERIZON      192.0.2.5  002.042_000  Inactive


Firmware Activation mode  =  Manual
```

Using a SIM Card

Cisco LTE/5G needs an active SIM card provided by a service provider. The SIM cards are usually provided in an unlocked state so that it can be used without a Personal Identification Number (PIN). If the SIM is unlocked, it can be inserted into a LTE/5G and used without an authorization code.

The SIM can be initially locked with a PIN code (4 to 8 digits s long) defined by the service provider. Contact your service provider for the PIN code.

The SIM-Lock feature allows a SIM to be locked or unlocked with a PIN code so that it is used only in an authorized device. Perform the SIM lock and unlock procedures using the Cisco IOS CLI through a console or Telnet/SSH to the ISR.

After the SIM is locked, it cannot initiate a call unless authentication is done using the same PIN. Authentication is done automatically by Cisco IOS through configuration of the PIN. This mandatory configuration for automatic SIM authentication is done using the Cisco IOS CLI as part of the router startup configuration.

After the Cisco IOS configuration is in place, the ISR can initiate an LTE connection. The ISR uses the configured PIN to authenticate prior to the LTE connection. If the Cisco IOS PIN configuration is missing or if the PIN is incorrect, the SIM authentication will fail and the connection will not be initiated.

If the locked SIM is moved to a different ISR or to another device, or if the LTE/5G in which the locked SIM resides is moved to a different LTE/5G slot in the same ISR, the ISR configuration should be changed. The configuration is associated with the cellular controller that is specific to an ISR LTE/5G slot number. This will ensure that the SIM card will not be used in any unauthorized device, or, if there are multiple LTE/5G in a single ISR, that the appropriate PIN is applied to each LTE/5G SIM. An authentication command (with the same PIN used to lock the SIM) must be defined on the new device or on the new cellular controller slot to successfully initiate the LTE connection.

The following procedures are used to configure a SIM:

Caution It is very important to use the correct PIN after it is configured. The SIM card will be blocked if the wrong PIN is entered three consecutive times on a locked SIM during authentication or when trying to unlock a locked SIM. You can unblock a blocked SIM card using the PUK code. Contact your service provider for the PUK code. Use the **cellular** *<slot>* **lte sim unblock** *<PUK code> <new PIN code>* command to unblock the SIM.

Changing the PIN

Ensure to enter the correct PIN, the SIM card gets blocked if the wrong PIN is entered three consecutive times.

Procedure

	Command or Action	Purpose
Step 1	**cellular** *slots subslots interface* **lte sim change-pin** *current-pin new-pin* **Example:** `Router# cellular 0/2/0 lte sim lock 1111 1234`	Locks or unlocks the SIM card using a PIN code. **Note** Locks or unlocks the SIM card using a PIN code. *pin*—A code (4 to 8 digits long) provided by your service provider to lock or unlock the SIM card. **Note** SIM should be in locked state when the PIN is being changed.

Locking and Unlocking a SIM Card Using a PIN

Perform this task to lock or unlock a SIM card given by your service provider. Make sure you enter the correct PIN, the SIM card gets blocked if the wrong PIN is entered three consecutive times.

Procedure

	Command or Action	Purpose
Step 1	**cellular** *unit* **lte sim** {**lock** | **unlock**} *pin* **Example:** `Router# cellular 0/2/0 lte sim lock 1111`	Locks or unlocks the SIM card using a PIN code. **Note** *pin*—A code (4 to 8 digits long) provided by your service provider to lock or unlock the SIM card.

Configure CHV1 for Unencrypted Level 0

Procedure

	Command or Action	Purpose
Step 1	**cellular** *slots subslots interface* **lte sim lte sim authenticate 0 pin** **Example:** `Router# controller cellular 0/0/0`	Enters the cellular controller configuration mode Use either of these commands:**lte sim authenticate 0 pin** or **lte sim authenticate 0 pin slot {0 | 1}**

Configure CHV1 for Unencrypted Level7

To configure an encrypted PIN, the scrambled value of the PIN must be obtained. To get the scrambled Level 7 PIN and to configure the SIM CHV1 code for verification using this encrypted PIN, enter the following commands in the EXEC mode. When obtaining the encrypted PIN for a SIM, a username and password are created by configuring password encryption, defining the username and associated password, copying the resulting scrambled password, and using this scrambled password in the SIM authentication command.

Note After the scrambled PIN has been obtained and used in SIM authentication, the username created can be deleted from the Cisco IOS configuration. A SIM should be locked for SIM authentication to work.

Procedure

	Command or Action	Purpose
Step 1	**service password-encryption** **Example:** `Router (config)# service password-encryption`	Enables password encryption.

	Command or Action	Purpose
Step 2	*username* **privilege** *var* *password pin* **Example:** `Router (config)# username SIM privilege 0 password 1111`	**Note** Creates username and password. name - specifies the username.*pin*—A 4 to 8 digits PIN code.
Step 3	**do show run | i name** **Example:** `Device(config)# do show run | i SIM`	Shows the username configuration line with the encrypted level 7 PIN for the username created in Step 3 (user "SIM" in the example shown). Copy the scrambled password for use in Step 6 (as the PIN).
Step 4	*username* **privilege 0** *password* *pin* **Example:** `Device(config)# controller cellular 0/0/0`	Enters the cellular controller configuration mode.
Step 5	**lte sim authenticate 7***pin* OR**lte sim authenticate 7 pin slot {0 | 1}** **Example:** `Device(config-controller)# lte sim authenticate 7 055A575E70`	Authenticates the SIM CHV1 code by using the encrypted keyword 7 and the scrambled PIN from Step 4. ThePIN is sent to the modem for authentication with each subsequent LTE connection. If authentication passes based on the configured PIN, the data call is allowed. If authentication fails, the modem does not initiate the data call. **Note** The slot keyword and its options are available only on platforms that supports Dual-SIM feature.
Step 6	**exit** **Example:** `Device(config-controller)# exit`	(Optional) Exits the cellular controller configuration mode.
Step 7	**no username***name* **Example:** `Device(config-controller)# no username SIM`	(Optional) Removes the username and password created in Step 3
Step 8	**no service password-encryption***name* **Example:** `Device(config-controller)# no service password-encryption`	(Optional) Removes the username and password created in Step 3

Configure CHV1 for Unencrypted Level7

To configure an encrypted PIN, the scrambled value of the PIN must be obtained. To get the scrambled Level 7 PIN and to configure the SIM CHV1 code for verification using this encrypted PIN, enter the following commands in the EXEC mode. When obtaining the encrypted PIN for a SIM, a username and password are created by configuring password encryption, defining the username and associated password, copying the resulting scrambled password, and using this scrambled password in the SIM authentication command.

Note After the scrambled PIN has been obtained and used in SIM authentication, the username created can be deleted from the Cisco IOS configuration. A SIM should be locked for SIM authentication to work.

Procedure

	Command or Action	Purpose
Step 1	**service password-encryption** **Example:** `Router (config)# service password-encryption`	Enables password encryption.
Step 2	*username* **privilege** *var* *password pin* **Example:** `Router (config)# username SIM privilege 0 password 1111`	**Note** Creates username and password. name - specifies the username.*pin*—A 4 to 8 digits PIN code.
Step 3	**do show run | i name** **Example:** `Device(config)# do show run | i SIM`	Shows the username configuration line with the encrypted level 7 PIN for the username created in Step 3 (user “SIM” in the example shown). Copy the scrambled password for use in Step 6 (as the PIN).
Step 4	*username* **privilege 0** *password* *pin* **Example:** `Device(config)# controller cellular 0/0/0`	Enters the cellular controller configuration mode.
Step 5	**lte sim authenticate 7***pin* `OR`**lte sim authenticate 7 pin slot {0 | 1}** **Example:** `Device(config-controller)# lte sim authenticate 7 055A575E70`	Authenticates the SIM CHV1 code by using the encrypted keyword 7 and the scrambled PIN from Step 4. ThePIN is sent to the modem for authentication with each subsequent LTE connection. If authentication passes based on the configured PIN, the data call is allowed. If authentication fails, the modem does not initiate the data call. **Note** The slot keyword and its options are available only on platforms that supports Dual-SIM feature.

	Command or Action	Purpose
Step 6	**exit** **Example:** `Device(config-controller)# exit`	(Optional) Exits the cellular controller configuration mode.
Step 7	**no username***name* **Example:** `Device(config-controller)# no username SIM`	(Optional) Removes the username and password created in Step 3
Step 8	**no service password-encryption***name* **Example:** `Device(config-controller)# no service password-encryption`	(Optional) Removes the username and password created in Step 3

Short Message Service (SMS) Capabilities

Cisco LTE/5G support receiving, transmitting, archiving, and deleting of SMS messages. This support includes the ability to view up to 25 received texts, and archive more messages in a custom file location. SMS is supported on multiple carriers. Cisco LTE/5G also have the capability to revert from LTE SMS to 3G and 2G SMS technology if necessary.

A sending device behind a Cisco LTE/5G transmits an SMS text message over the 4G cellular link through cellular towers until it the message reaches the recipient's router, which then notifies the recipient device, such as a cell phone. The receiving device uses the same process to return a reply to the sending device. The following figure describes the flow from a mobile device to a sending device. For SMS transmission to work, end users must have a text-capable device, and optionally, a text plan. If end users do not have a text plan, standard SMS rates apply to their text transmissions.

Figure 2: SMS Network

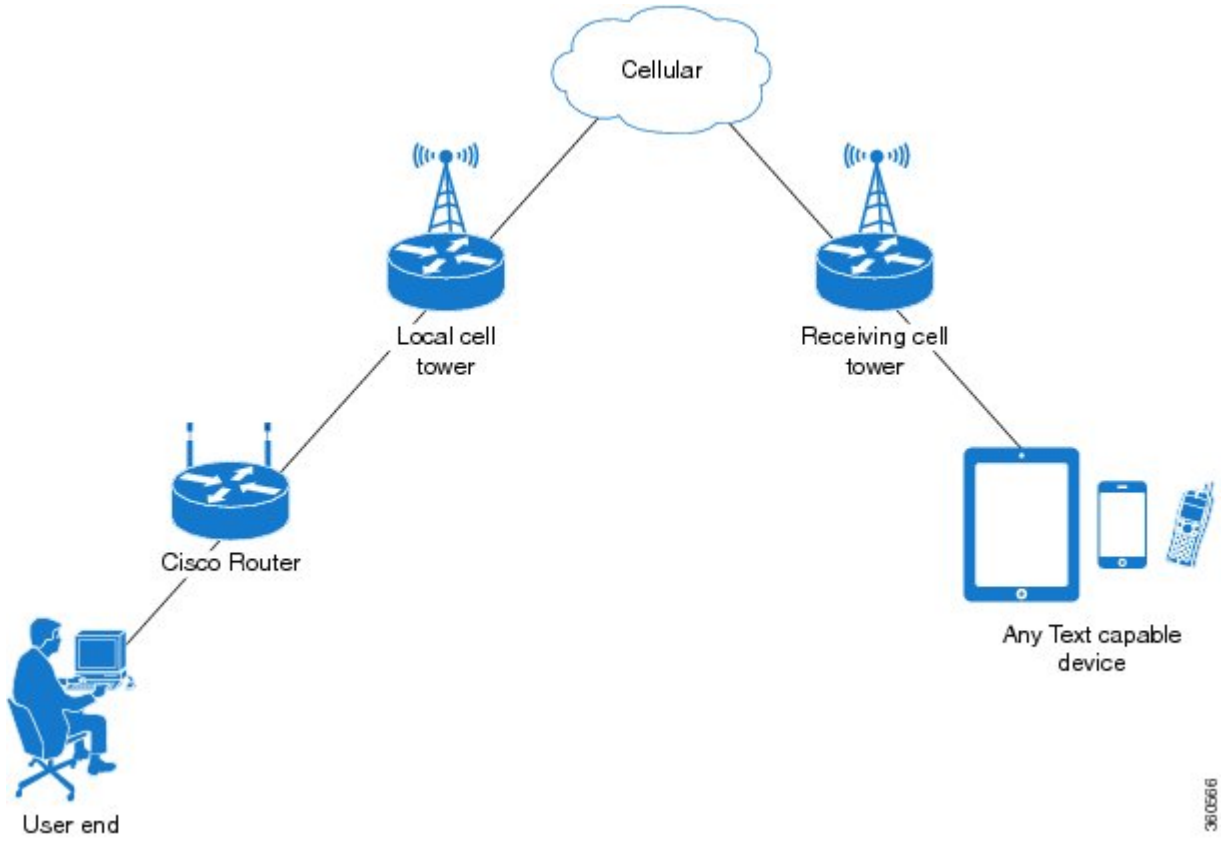

Data Account Provisioning

One or more modem data profiles can be created to provision a modem on a LTE/5G SKU. An active wireless account with a service provider with one or more (dual) SIM cards must be installed. The modem data profile is pre-configured on the modem.

The following tasks are used to verify the signal strength and service availability of the modem and to create, modify, and delete modem data profiles:

IP Multimedia Subsystem Profiles

IP Multimedia Subsystem (IMS) profiles establish a session, and are a part of the modem configuration and are stored in the modem's NVRAM. An IMS network is an access-independent and standard-based IP connectivity service that enables different types of multimedia services to end users using common Internet-based protocols.

LTE/5G LEDs

The following table describes the LED behavior in LTE/5G.

Table 2: LTE/5G LED Indicators

LED	Color/Bar and Description	
LTE SIM(0) & SIM(1)	Green (Solid)	Modem up, SIM installed and active
	Green Blink	LTE data activity
	Off	Modem not up; or modem up and no SIM
	Amber (Solid)	Modem up, SIM installed but not active
RSSI - Uses Bars for LED Indication	Four Bar	High RSSI >= -69dBm
	Three Bar	Medium RSSI, -89dBm <> -70dBm
	Two Bar	Low RSSI, -99dBm <> -90dBm
	One Bar	RSSI <= -100dBm
	0 or No Bar	No Service
SERVICE - Uses Color Indication	Green(solid)	LTE signal present (RSSI LEDs will be Green)
	Amber(solid)	2G/3G signal present (RSSI LEDs will be Amber)
	No Color	No service detected.
GPS	Green (Solid)	GPS coordinates are obtained.
	Off	GPS is disabled, GPS is enabled without GPS mode and NMEA configuration, or GPS is acquiring

Configuring Cisco LTE/5G

For LTE/5G, the numbering for slot 0, module 0, and port 0 is 0/2/0 for all commands.

Verifying Modem Signal Strength and Service Availability

For the LTE/5G, the *unit* argument identifies the router slot, module slot, and port separated by slashes (0/2/0).

Procedure

	Command or Action	Purpose
Step 1	**show cellular** *unit* **network** **Example:** `Router# show cellular 0/2/0 network`	Displays information about the carrier network, cell site, and available service.
Step 2	**show cellular** *unit* **radio** **Example:** `Router# show cellular 0/2/0 radio`	Shows the radio signal strength. **Note** The RSSI should be better than –90 dBm for steady and reliable connection.
Step 3	**show cellular** *unit* **profile** **Example:** `Router# show cellular 0/2/0 profile`	Shows information about the modem data profiles created.
Step 4	**show cellular** *unit* **security** **Example:** `Router# show cellular 0/2/0 security`	Shows the security information for the modem, such as SIM and modem lock status.
Step 5	**show cellular** *unit* **all** **Example:** `Router# show cellular 0/2/0 all`	Shows consolidated information about the modem, profiles created, radio signal strength, network security, and so on.

Guidelines for Creating, Modifying, or Deleting Modem Data Profiles

Customized profiles (Access Point Name (APN) in mobile networks) can be created and used on Cisco LTE/5G SKU's. Maximum number of profiles that can be created are 16.

Cisco SKU's shipping with specific carrier provisioning file (Can be found in Carrier label under "show cellular <slot> hardware"), default profiles are already populated and can be deployed readily.

In all other cases where profile configurations are not available, separate profiles should be created with required parameters.

You can create multiple profiles on Cisco LTE/5G. The following are the default internet profile numbers for the modems:

Modem	Profile Number
EM7430	Profile 1
EM7455 (Verizon or Sprint)	Both Profile 1 and Profile 3
EM7455 (AT&T or other SP's)	Profile 1

Follow these guidelines when you configure a data profile using EXEC mode or Config mode :

- You do not have to make any profile-related changes if your modem comes with a data profile, for instance, AT&T, Sprint and Verizon.
- If any profile parameter changes are required for a connection type, the changes will likely be carried out in the default profiles.
- To configure different profile types and use them for a different connection, you can create separate profiles with different parameters (for instance, APN names). Note that only one profile is active at a given time.
- Use the **show cellular <unit> profile** command to view the data profile. An asterisk(*) symbol is displayed against the data profile. Double asterisk(**) symbol is displayed against the attach profile.
- The data profile is used to set up a data call. If you want to use a different profile, that profile needs to be made the default one. Use the **lte sim data-profile** *number* command to change the default profile under **controller cellular 0/2/0**.

Creating, Modifying, or Deleting Data Profiles Using EXEC Mode

Customized profiles (Access Point Name (APN) in mobile networks) can be created and used on Cisco LTE/5G SKU's. Maximum number of profiles that can be created are 16.

Cisco SKU's shipping with specific carrier provisioning file (can be found in carrier label under **show cellular** *slot* **hardware**, default profiles are already populated and can be deployed readily.

Note For the LTE/5G, the *unit* argument identifies the router slot, module slot, and port separated by slashes (0/2/0).

Procedure

	Command or Action	Purpose
Step 1	**cellular** *unit* **lte profile** *[***create** | **delete***] profile-number [apn [authentication [username password [bearer-type]]]]* **Example:** `Router# cellular 0/2/0 lte profile create 2 apn.com pap username pwd ipv4`	Creates, modifies, or deletes a modem data profile in the privileged EXEC mode. • The *profile-number* argument specifies the profile number created for the modem. • (Optional) The *apn* argument specifies an Access Point Name (APN). An APN is provided by your service provider. Only a single APN can be specified for a single profile. • (Optional) The *authentication* parameter specifies the authentication type used. Acceptable parameters are **chap**, **none** (no authentication), **pap**, and **pap_chap** (PAP or CHAP authentication). • (Optional) The *username* and *password* arguments are given by a service provider. These are mandatory when an

	Command or Action	Purpose
		authentication type other than **none** is used. • (Optional) The *PDN* type parameter specifies the type of packet data session established with mobile network using this profile. Acceptable parameters are: **ipv4 ipv6** and **ipv4v6** (IPv4 and IPv6). The **show cellular** *slot* profile displays configured profile list. **Note** Single asterisk(*) displayed against data profile. Double asterisk(**) displayed against attached profile.

Example

```
router# show cellular 0/2/0 profile
Profile 1 = INACTIVE **
--------
PDP Type = IPv4v6
Access Point Name (APN) = vzwims
Authentication = None

Profile 2 = INACTIVE
--------
PDP Type = IPv4v6
Access Point Name (APN) = vzwadmin
Authentication = None

Profile 3 = ACTIVE*
--------
PDP Type = IPv4v6
PDP address = 192.0.2.1
PDP IPV6 address = 2600:1010:B00E:1E11:192D:3E20:199B:3A70/64  Scope: Global
Access Point Name (APN) = VZWINTERNET
Authentication = None
        Primary DNS address = 192.0.2.2
        Secondary DNS address = 192.0.2.2
        Primary DNS IPV6 address = 2001:DB8:0000:FFFF:FFFF:FFFF:FFFF:FFFF
        Secondary DNS IPV6 address = 2001:DB8:0000:FFFF:FFFF:FFFF:FFFF:FFFF
```

Note If data and attach profile bindings need modification, use the **controller cellular** slot.

```
router(config-controller)# lte sim data-profile 3 attach-profile 2 slot unit


Device #show cellular 0/2/0 profile
Profile 1 = INACTIVE
--------------------------------------------------
```

```
PDP Type = IPv4v6
Access Point Name (APN) = test
Authentication = None

Profile 2 = INACTIVE **
--------
PDP Type = IPv4
Access Point Name (APN) = internet
Authentication = PAP or CHAP
Username =  user@solution.com
Password =  cisco

Profile 3 = INACTIVE*
--------
PDP Type = IPv4v6
Access Point Name (APN) = basic
Authentication = None

  * - Default profile
 ** - LTE attach profile
Configured default profile for active SIM 0 is profile 2.
```

Creating, Modifying, or Deleting Data Profiles in Configuration Mode

Note For the LTE/5G NIM, the *unit* argument identifies the router slot, WIC slot, and port separated by slashes (0/1/0).

Procedure

	Command or Action	Purpose

Step 1	**profile id***id* **apn** *apn name [***authentication** *[username password]***pdn-type** *[pdn type][***slot***slot-number*| *no-overwrite]]]]*
	Example:
	`Router(config-controller)# profile id 1 apn apn_internet authentication none pdn-type ipv4 slot 0`
		Configures a cellular profile in the configuration mode.
		• The *id* argument specifies the profile number created for the modem. The maximum number of profiles that can be created for each modem are given as follows:
		  • EM7455 – Up to 16 profiles
		  • EM7430 – Up to 16 profiles
		• (Optional) The *apn* argument specifies an Access Point Name (APN) in the profile. An APN is provided by your service provider. Only a single APN can be specified in a single profile.
		• (Optional) The *authentication* parameter specifies the authentication type used. Acceptable parameters are **chap**, **none** (no

	Command or Action	Purpose
		authentication), **pap**, and **pap_chap** (PAP or CHAP authentication). • (Optional) The *username* and *password* arguments are provided by a service provider. These are mandatory when an authentication type is used other than none. • (Optional) The *PDN-type* parameter specifies the type of packet data session established with mobile network using this profile. Acceptable parameters are: **ipv4**, **ipv6** and **ipv4v6**. • (Optional) The *slot-number* parameter specifies the slot number. By default, the slot-number is the current active slot-number, if not specified. • (Optional) *No-overwrite* action to be taken when a profile already exists in modem for the profile id. If there is a profile already exists in the modem for this profile id and no-overwrite option is specified, this configuration will not overwrite existing profile. Default is *overwrite*.

Configuration Examples

The following example shows how to change a default profile on LTE/5G:

```
router(config-controller)# lte sim data-profile 2 attach-profile 1 slot <unit>
```

The following example shows the output of the **show cellular** command for Verizon network service:

```
router# show cellular 0/2/0 profile
Profile 1 = INACTIVE **
--------
PDP Type = IPv4v6
Access Point Name (APN) = vzwims
Authentication = None

Profile 2 = INACTIVE
--------
PDP Type = IPv4v6
Access Point Name (APN) = vzwadmin
Authentication = None

Profile 3 = ACTIVE*
--------
PDP Type = IPv4v6
PDP address = 192.0.2.1
PDP IPV6 address = 2600:1010:B00E:1E11:192D:3E20:199B:3A70/64  Scope: Global
Access Point Name (APN) = VZWINTERNET
```

```
Authentication = None
        Primary DNS address = 192.0.2.2
        Secondary DNS address = 192.0.2.3
        Primary DNS IPV6 address = 2001:DB8:0000:FFFF:FFFF:FFFF:FFFF:FFFF
        Secondary DNS IPV6 address = 2001:DB8:0000:FFFF:FFFF:FFFF:FFFF:FFFF

Profile 4 = INACTIVE
--------
PDP Type = IPv4v6
Access Point Name (APN) = vzwapp
Authentication = None

Profile 5 = INACTIVE
--------
PDP Type = IPv4v6
Access Point Name (APN) = vzw800
Authentication = None

Profile 6 = INACTIVE
--------
PDP Type = IPv4v6
Access Point Name (APN) = CISCO.GW4.VZWENTP
Authentication = None

  * - Default profile
 ** - LTE attach profile
```

Configuration Example

Example Configuration under Controller Cellular

```
router(config-controller)# profile id 1 apn apn_internet authentication none pdn-type ipv4
 no-overwrite
```

Controller Cellular Running Configuration

```
Router #show running-config controller cellular <slot>
Building configuration...

Current configuration : 330 bytes
!
controller Cellular 0/2/0
profile id 1 apn apn_internet authentication none pdn-type ipv4 no-overwrite
end



 ** This will override exec mode profile configuration
 ** If for a profile ID, configuration CLI exists, exec mode configuration cannot be
performed.
 Router #show cellular <slot> profile 5
Profile 5 = INACTIVE
--------
PDP Type = IPv4
Access Point Name (APN) = apn_old
Authentication = None

TSN1#cellular <slot> lte profile create 5 apn_new
 Warning: You are attempting to create Profile 5
 Profile 5 was configured through controller configuration 'profile id <profile #>'
 Please execute command under controller configuration using '[no] profile id <profile #>'
 for profile 5 to create
 Profile 5 NOT written to modem
```

```
** As part of this enhancement, any attach and/or data profile changes will immediately
trigger a connection reset and take effect. Below warning message will be displayed.

Warning: You are attempting to modify the data/attach profile.
Connection will be reset
```

Configure Radio Band Selection

This feature allow users to configure and lock down the modem to a specific RF band, or set of bands. The preference can be set to be equal to, or a sub-set of the capability supported by the modem/carrier combination.

The following examples show the controller configuration commands.

:

Procedure

	Command or Action	Purpose

Step 1	**conf t**
	Example:
	`Device# conf t`
	`Enter configuration commands, one per line.  End with CNTL/Z.`	

Step 2	**controllercellular***interface-number* **Example:** `Device(config)# controller cellular 0/2/0`	
Step 3	**lte modem band-selectindicesumts3***gindices***lte4***gindices*[**nr5***gindices*]**slot***slot #* **Example:** `Device(config-controller)# lte modem band-select indices umts3g 24 lte4g 48 nr5g 40 slot 0`	

Example

```
router#show cellular 0/2/0 radio ?
  band     Show Radio band settings
  history  Show Radio history in graph format
  |        Output modifiers
  <cr>     <cr>
```

```
router#show cell 0/2/0 radio band
LTE bands supported by modem:
- Bands 1 2 3 4 5 7 8 12 13 14 18 19 20 25 26 28 29 30 32 34 38 39 40 41 42 43 46 48 66 71.
LTE band Preference settings for the active sim(slot 0):
- Bands 1 2 3 4 5 7 8 12 13 14 18 19 20 25 26 28 29 30 32 34 38 39 40 41 42 43 46 48 66 71.
```

```
NR5G bands supported by modem:
- Bands 1 2 3 5 7 8 12 20 25 28 38 40 41 48 66 71 77 78 79.
NR5G band Preference settings for the active sim(slot 0):
- Bands 1 2 3 5 7 8 12 20 25 28 38 40 41 48 66 71 77 78 79.

3G bands supported by modem:
Index: <none>
3G band Preference settings for the active sim(slot 0):
Index: <none>

=========================================

Band index reference list:

For LTE and 5G, indices 1-128 correspond to bands 1-128.

For 3G, indices 1-64 maps to the 3G bands mentioned against each above.
```

Multiple PDN Contexts

This feature enables router to connect to multiple (currently two) packet data networks. This allows users to enable different features independently on each PDN. For instance, the first PDN can be used for public Internet access and the second one for VPN connectivity; each PDN has its own set of IP addresses and QoS characteristics.

During the initialization of the router, two cellular interfaces corresponding to the two PDNs are created:

cellular 0/2/0 and cellular 0/2/1

These interfaces can be viewed as two logical interfaces using the same radio resources.

The interface cellular 0/2/0 is referred as the first PDN, and cellular 0/2/1 as the second PDN.

To bring up the two PDNs, configuration needs to be applied on both the cellular interfaces in order to make two simultaneous data calls. The next step is to associate the data-bearer profile with its corresponding cellular interface or PDN. It is sufficient to associate the profile for just the first PDN under the controller cellular configuration. Note that the second PDN assumes a profile that is just one above the profile used for the first PDN. For example, if the first PDN uses profile 1, the second PDN uses profile 2 automatically when the call is initiated for the second one.

After the interesting traffic is routed through these cellular interfaces, data calls are initiated and each interface is assigned its own IP and DNS addresses provided by the cellular network.

Note Both PDNs share radio resources. Therefore, any throughput measurement needs to take into account the aggregate throughput on both PDNs, instead of just one.

Note For Verizon cellular network, the second PDN uses profile #6 automatically, when the call is initiated for the second data connection.

Configuration Examples

The following example shows how to configure multiple PDN on Cisco LTE/5G SKU:

```
interface Cellular0/2/0
ip address negotiated
 dialer in-band
 dialer idle-timeout 0
 dialer-group 1
 ipv6 enable
 pulse-time 1
!
interface Cellular0/2/1
ip address negotiated
dialer in-band
dialer idle-timeout 0
dialer-group 1
ipv6 enable
pulse-time 1
! dialer-list 1 protocol ipv6 permit
!

ip route 192.0.2.1 255.255.255.0 Cellular0/2/0
ip route 192.0.2.2 255.255.255.255 Cellular0/2/1
!
```

The following show commands can be used to verify the status of the multiple PDN calls:

```
Router#sh cellular 0/2/0 profile
Profile 1 = ACTIVE* **
--------
PDP Type = IPv4v6
PDP address = 192.0.2.1
PDP IPV6 address = 2001:DB8:0000:FFFF:FFFF:FFFF:FFFF:FFFF/64  Scope: Global
Access Point Name (APN) = broadband
Authentication = None
        Primary DNS address = 192.0.2.2
        Secondary DNS address = 192.0.2.3
        Primary DNS IPV6 address = 2001:DB8:0000:FFFF:FFFF:FFFF:FFFF:FFFF
        Secondary DNS IPV6 address = 2001:DB8:0000:FFFF:FFFF:FFFF:FFFF:FFFF

.
.
.

Profile 16 = INACTIVE
--------
PDP Type = IPv4
Access Point Name (APN) = broadband
Authentication = CHAP
Username: ipv4v6
Password: xxxxxx

  * - Default profile
 ** - LTE attach profile

Configured default profile for active SIM 0 is profile 1.

Router# sh cellular 0/2/0 connection
Profile 1, Packet Session Status = ACTIVE
        Cellular0/2/0:
        Data Packets Transmitted = 9 ,  Received = 9
        Data Transmitted = 900 bytes, Received = 900 bytes
        IP address = 192.0.2.1
        IPV6 address = 2001:DB8:0000:FFFF:FFFF:FFFF:FFFF:FFFF/64  Scope: Global
        Primary DNS address = 192.0.2.2
        Secondary DNS address = 192.0.2.3
        Primary DNS IPV6 address = 2001:DB8:0000:FFFF:FFFF:FFFF:FFFF:FFFF
```

```
        Secondary DNS IPV6 address = 2001:DB8:0000:FFFF:FFFF:FFFF:FFFF:FFFF
Profile 2, Packet Session Status = ACTIVE
        Cellular0/2/1:
        Data Packets Transmitted = 7 ,  Received = 2
        Data Transmitted = 700 bytes, Received = 176 bytes
        IP address = 192.0.2.4
        IPV6 address = 2001:DB8:0000:FFFF:FFFF:FFFF:FFFF:FFFF/64  Scope: Global
        Primary DNS address = 171.70.168.183
        Secondary DNS address = 192.0.2.5
        Primary DNS IPV6 address = 2001:DB8:0000:FFFF:FFFF:FFFF:FFFF:FFFF
        Secondary DNS IPV6 address = 2001:DB8:0000:FFFF:FFFF:FFFF:FFFF:FFFF
.
.
.
Profile 16, Packet Session Status = INACTIVE

Router#show ip interface brief
Interface              IP-Address      OK? Method Status                Protocol
GigabitEthernet0/0/0   192.0.2.1       YES manual up                    up
GigabitEthernet0/0/1   unassigned      YES unset  administratively down down
GigabitEthernet0/1/0   unassigned      YES unset  administratively down down
GigabitEthernet0/1/1   unassigned      YES unset  administratively down down
GigabitEthernet0/1/2   unassigned      YES unset  administratively down down
GigabitEthernet0/1/3   unassigned      YES u
nset  administratively down down
GigabitEthernet0/1/4   unassigned      YES unset  administratively down down
GigabitEthernet0/1/5   unassigned      YES unset  administratively down down
GigabitEthernet0/1/6   unassigned      YES unset  administratively down down
GigabitEthernet0/1/7   unassigned      YES unset  administratively down down
Wl0/1/8                unassigned      YES unset  administratively down down
Cellular0/2/0          192.0.2.2      YES IPCP   up                    up
Cellular0/2/1          192.0.2.3    YES IPCP   up                    up
Vlan1                  unassigned      YES manual up                    down

Router#
Router# show ip dns view
DNS View default parameters:
DNS Resolver settings:
  Domain lookup is enabled
  Default domain name:
  Domain search list:
  Domain name-servers:
    192.0.2.1
    2001:4860:4860::8888
    192.0.2.2
    2001:DB8:0000:FFFF:FFFF:FFFF:FFFF:FFFF
    192.0.2.3
    8.8.8.8
DNS Server settings:
  Forwarding of queries is enabled
  Forwarder addresses: DNS View default parameters: DNS Resolver settings:
Domain lookup is enabled Default domain name: Domain search list: Domain name-servers:
192.0.2.1
192.0.2.2
192.0.2.3
DNS Server settings:
Forwarding of queries is enabled
Forwarder addresses:
Router#
```

Configuring a SIM for Data Calls

Locking and Unlocking a SIM Card Using a PIN Code

Perform this task to lock or unlock a SIM card given by your service provider.

The SIM card gets blocked if the wrong PIN is entered three consecutive times. Make sure you enter the correct PIN the SIM is configured with. If your SIM card gets blocked, contact your service provider for a PUK code. Using the PUK code, you can unblock the SIM card.

For the LTE/5G, the *unit* argument identifies the router slot, module slot, and port separated by slashes (0/2/0).

Procedure

	Command or Action	Purpose
Step 1	**cellular** *unit* **lte sim** {**lock** | **unlock**} *pin* **Example:** `Router# cellular 0/2/0 lte sim lock 1111`	Locks or unlocks the SIM card using a PIN code. • *pin*—A code (4 to 8 digits long) provided by your carrier to lock or unlock the SIM card.

Changing the PIN Code

Perform this task to change the PIN code of a SIM.

For the LTE/5G, the *unit* argument identifies the router slot, module slot, and port separated by slashes (0/2/0).

Procedure

	Command or Action	Purpose
Step 1	**cellular** *unit* **lte sim change-pin** *pin new-pin* **Example:** `Router# cellular 0/2/0 lte sim change-pin 1111 1234`	Changes the assigned PIN code. SIM should be in locked state when the PIN is being changed.

Verifying the Security Information of a Modem

Perform this task to verify the security information of a modem.

Note For the LTE/5G, the *unit* argument identifies the router slot, module slot, and port separated by slashes (0/2/0).

Procedure

	Command or Action	Purpose
Step 1	**show cellular** *unit* **security** **Example:** `Router# show cellular 0/2/0 security`	Shows the security information of the modem, including the SIM lock status.

Configuring Automatic Authentication for a Locked SIM

An unencrypted PIN can be configured to activate the Card Holder Verification (CHV1) code that authenticates a modem.

The SIM card gets blocked if the wrong PIN is entered three consecutive times. Make sure you enter the correct PIN the SIM is configured with. If your SIM card gets blocked, contact your service provider for a PUK code.

Follow these procedures when using an unencrypted Level 0 PIN to configure CHV1. For instructions on how to configure CHV1 using an encrypted Level 7 PIN, see the Configuring an Encrypted PIN for a SIM, on page 28.

A SIM should be locked for SIM authentication to work. To verify the SIM's status, use the **show cellular** *unit* **security** command.

For the LTE/5G, the *unit* argument identifies the router slot, module slot, and port separated by slashes (0/2/0).

Procedure

	Command or Action	Purpose
Step 1	**configure terminal** **Example:** `Router# configure terminal`	Enters global configuration mode.
Step 2	**controller cellular** *unit* **Example:** `Router(config)# controller cellular 0/2/0`	Enters the cellular controller configuration mode.
Step 3	**lte sim authenticate 0** *pin*	Authenticates the SIM CHV1 code by using an unencrypted (**0**) keyword and PIN. This PIN is sent to the modem for authentication with each subsequent LTE connection. If authentication passes based on the configured PIN, the data call is allowed. If authentication fails, the modem does not initiate the data call.

	Command or Action	Purpose
		Note This command is valid only when an unencrypted PIN is used. To configure CHV1 code using an encrypted PIN, see the Configuring an Encrypted PIN for a SIM, on page 28.

Configuring an Encrypted PIN for a SIM

To configure an encrypted PIN, the scrambled value of the PIN must be obtained. To get the scrambled Level 7 PIN and to configure the SIM CHV1 code for verification using this encrypted PIN, enter the following commands in the EXEC mode.

Note When obtaining the encrypted PIN for a SIM, a username and password are created by configuring password encryption, defining the username and associated password, copying the resulting scrambled password, and using this scrambled password in the SIM authentication command. After the scrambled PIN has been obtained and used in SIM authentication, the username created can be deleted from the Cisco IOS configuration.

Note A SIM should be locked for SIM authentication to work. To verify the SIM's status, use the **show cellular** <*unit*> **security** command.

Note For the 4G LTE SKU, the *unit* argument identifies the router slot, module slot, and port separated by slashes (0/2/0).

Procedure

	Command or Action	Purpose
Step 1	**configure terminal** **Example:** `Router# configure terminal`	Enters global configuration mode.
Step 2	**service password-encryption** **Example:** `Router(config)# service password-encryption`	Enables password encryption.
Step 3	**username** *name* **privilege 0 password** *pin* **Example:**	Creates username and password. • *name*—Specifies the username.

	Command or Action	Purpose
	`Router(config)# username SIM privilege 0 password 1111`	• *pin*—Specifies the four- to eight-digit PIN code.
Step 4	**do show run** | **i** *name* **Example:** `Router(config)# do show run | i SIM`	Shows the username configuration line with the encrypted level 7 PIN for the username created in Step 3 (user "SIM" in the example shown). Copy the scrambled password for use in Step 6 (as the PIN).
Step 5	**controller cellular** *unit* **Example:** `Router(config)# controller cellular 0/2/0`	Enters the cellular controller configuration mode.
Step 6	**lte sim authenticate** {**0** | **7**} *pin*	Authenticates the SIM CHV1 code by using the encrypted keyword **7** and the scrambled PIN from Step 4. The PIN is sent to the modem for authentication with each subsequent LTE connection. If authentication passes based on the configured PIN, the data call is allowed. If authentication fails, the modem does not initiate the data call.
Step 7	**exit** **Example:** `Router(config-controller)# exit`	(Optional) Exits the cellular controller configuration mode.
Step 8	**no username** *name* **Example:** `Router(config)# no username SIM`	(Optional) Removes the username and password created in Step 3.
Step 9	**no service password-encryption** **Example:** `Router(config)# no service password-encryption`	(Optional) Disables password encryption.

Applying a Modem Profile in a SIM Configuration

Procedure

	Command or Action	Purpose
Step 1	**configure terminal** **Example:**	Enters the global configuration mode.

	Command or Action	Purpose
	`Router# configure terminal`	
Step 2	**controller cellular** *unit* **Example:** `Router(config)# controller cellular 0/2/0`	Enters the cellular controller configuration mode.
Step 3	**lte sim data-profile** *number* **attach-profile** *number*	Applies the configured profile number to the SIM and its slot number. The default (primary) slot is 0. The **attach profile** is the profile used by the modem to attach to the LTE network. The **data profile** is the profile used to send and receive data over the cellular network.

Data Call Setup

To set up a data call, use the following procedures:

Configuring the Cellular Interface

To configure the cellular interface, enter the following commands starting in EXEC mode.

For the LTE/5G, the *unit* argument identifies the router slot, module slot, and port separated by slashes (0/2/0).

If a tunnel interface is configured with **ip unnumbered cellular 0/2/0**, it is necessary to configure the actual static IP address under the cellular interface, in place of **ip address negotiated**.

Procedure

	Command or Action	Purpose
Step 1	**configure terminal** **Example:** `Router# configure terminal`	Enters global configuration mode.
Step 2	**interface cellular** unit **Example:** `Router(config)# interface cellular 0/2/0`	Specifies the cellular interface.
Step 3	**ip address negotiated** **Example:** `Router(config-if)# ip address negotiated`	Specifies that the IP address for a particular interface is dynamically obtained.

	Command or Action	Purpose
Step 4	**dialer in-band** **Example:** `Router(config-if)# dialer in-band`	Enables DDR and configures the specified serial interface to use in-band dialing.
Step 5	**dialer-group** group-number **Example:** `Router(config-if)# dialer-group 1`	Specifies the number of the dialer access group to which the specific interface belongs.
Step 6	**exit** **Example:** `Router(config-if)# exit`	Enters the global configuration mode.
Step 7	**ip route** *network-number network-mask* {*ip-address* | *interface*} [*administrative distance*] [**name** *name*] **Example:** `Router(config)# ip route 209.165.200.225 255.255.255.224 cellular 0/2/0`	Establishes a floating static route with the configured administrative distance through the specified interface. **Note** A higher administrative distance should be configured for the route through the backup interface so that it is used only when the primary interface is down.
Step 8	**dialer-list** dialer-group **protocol** protocol-name {**permit** | **deny** | **list** *access-list-number* | **access-group**} **Example:** `Router(config)# dialer-list 1 protocol ip list 1`	Creates a dialer list for traffic of interest and permits access to an entire protocol.

Configuring DDR

To configure DDR for the cellular interface, enter the following commands starting in EXEC mode.

Note For the LTE/5G, the *unit* argument identifies the router slot, module slot, and port separated by slashes (0/2/0).

Procedure

	Command or Action	Purpose
Step 1	**configure terminal** **Example:**	Enters global configuration mode.

	Command or Action	Purpose
	`Router# configure terminal`	
Step 2	**interface cellular** *unit* **Example:** `Router(config)# interface cellular 0/2/0`	Specifies the cellular interface.
Step 3	**ip address negotiated** **Example:** `Router(config-if)# ip address negotiated`	Specifies that the IP address for a particular interface is dynamically obtained.
Step 4	**dialer in-band** **Example:** `Router(config-if)# dialer in-band`	Enables DDR and configures the specified serial interface to use in-band dialing.
Step 5	**ip address negotiated** **Example:** `Router(config-if)# ip address negotiated`	Specifies that the IP address for a particular interface is dynamically obtained.
Step 6	**dialer idle-timeout** *seconds* **Example:** `Router(config-if)# dialer idle-timeout 30`	Specifies the duration of idle time, in seconds, after which a line has no outbound traffic. “0” second means no idle timeout. The default idle timeout is 120 seconds if there is no idle timer specified.
Step 7	dialer-group group-number **Example:** `Router(config-if)# dialer-group 1`	Specifies the number of the dialer access group to which the specific interface belongs.
Step 8	**exit** **Example:** `Router(config-if)# exit`	Enters the global configuration mode.
Step 9	dialer-list dialer-group protocol protocol-name {permit | deny | list *access-list-number* | access-group} **Example:** `Router(config)# dialer-list 1 protocol ip list 1`	Creates a dialer list for traffic of interest and permits access to an entire protocol.
Step 10	access-list access-list-number permit *ip*-source-address	Defines traffic of interest.

	Command or Action	Purpose
	Example: `Router(config)# access-list 1 permit any`	

Enabling 4G GPS and NMEA Data Streaming

GPS NMEA data streaming to external NMEA 2.0-compliant GPS plotter applications can be enabled on Cisco LTE/5G.

Note For the LTE/5G, the *unit* argument identifies the router slot, module slot, and the port, and is separated by slashes (0/2/0).

Procedure

	Command or Action	Purpose
Step 1	configure terminal **Example:** `Router# configure terminal`	Enters the configuration mode.
Step 2	controller cellular *unit* **Example:** `Router(config)# controller cellular 0/2/0`	Enters the controller cellular configuration mode.
Step 3	lte gps enable **Example:** `Router(config-controller)# lte gps enable`	(Optional) GPS is enabled by default. Use this command to enable the GPS feature if GPS has been disabled for any reason.
Step 4	lte gps mode standalone **Example:** `Router(config-controller)# lte gps mode standalone`	Enables the standalone GPS mode.

Step 5	lte gps nmea {ip | udp [*source address*][*destination address*][*destination port*] }
	Example:
	`Router(config-controller)# lte gps nmea ip`
	or
	`Router(config-controller)# lte gps nmea`
		Enables NMEA. Cisco 4G LTE Advanced support only IP NMEA. Therefore, the IP interface and serial interface options are unavailable.

	Command or Action	Purpose
Step 6	test cellular *unit* modem-power-cycle **Example:** `Router# test cellular 0/2/0 modem-power-cycle`	GPS can take effect only after modem power cycle.
Step 7	end **Example:** `Router(config-controller)# end`	Exits the controller configuration mode and returns to the privileged EXEC mode.

Step 8	show cellular *unit* gps
	Example:
	`Router# show cellular 0/2/0 gps`
	
	`GPS Info`
	`----------`
	`GPS Feature: enabled`
	`GPS Mode Configured: standalone`
	`GPS Port Selected: Dedicated GPS port`
	`GPS Status: GPS coordinates acquired`
	`Last Location Fix Error: Offline [0x0]`
	`Latitude: 38 Deg 11 Min 22.1939 Sec North`
	`Longitude: 96 Deg 40 Min 48.7066 Sec West`
	`Timestamp (GMT): Thu Jun 29 07:13:42 2017`
	
	`Fix type index: 0, Height: 318 m`
	`Satellite Info`
	`----------`
	`Satellite #3, elevation 62, azimuth 282,`
	` SNR 53`
	`.`
	`.`
	`.`
	`Satellite #28, elevation 0, azimuth 0,`
	`SNR 0`
	`Router#`
		Displays a summary of the following GPS data:
		• GPS state information (GPS disabled, GPS acquiring, GPS enabled)
		• GPS mode configured (standalone)
		• GPS location and timestamp information
		• GPS satellite information
		• GPS feature (enabled or disabled)
		• GPS port selected (Dedicated GPS and GPS port with voltage-no-bias)

Step 9	show cellular *unit* gps detail
	Example:
	`Router# show cellular 0 gps detail`
	`GPS Info`
	`----------`
	`GPS Feature: enabled`
	`GPS Mode Configured: standalone`
	`GPS Port Selected: Dedicated GPS port`
	`GPS Status: GPS coordinates acquired`
	`Last Location Fix Error: Offline [0x0]`
	`Latitude: 38 Deg 11 Min 22.1939 Sec North`
	`Longitude: 96 Deg 40 Min 48.7066 Sec West`
	`Timestamp (GMT): Thu Jun 29 07:13:42 2017`
	`Fix type index: 0, Height: 0 m`
	`HDOP: , GPS Mode Used: not configured`
	
	`Satellite Info`
	`----------`
	`Satellite #3, elevation 0, azimuth 0,`
	`SNR 53`
		Displays detailed GPS data.

	Command or Action	Purpose
	. . . Satellite #9, elevation 0, azimuth 0, SNR 0 Router#	

Configuring 4G SMS Messaging

Note For the LTE/5G, the *unit* argument identifies the router slot, module slot, and the port, and is separated by slashes (0/2/0).

Procedure

	Command or Action	Purpose
Step 1	configure terminal **Example:** `Router# configure terminal`	Enters the configuration mode.
Step 2	controller cellular *unit* **Example:** `Router(config)# controller cellular 0/2/0`	Enters the controller cellular configuration mode.

Step 3	lte sms archive path *FTP-URL*
	Example:
	`Router(config-controller)# lte sms archive path ftp://username:password@172.25.211.175/SMS-LTE`
		Specifies an FTP server folder path to send all the incoming and outgoing SMS messages. After the folder path is identified, it is appended automatically with outbox and inbox folders for the path to which SMS messages are sent and received, for example:
		`ftp://172.25.211.175/SMS-LTE/outbox`
		`ftp://172.25.211.175/SMS-LTE/inbox`

Step 4	cellular *unit* lte sms view { all | *ID* | summary }
	Example:
	`Router# cellular 0/2/0 lte sms view summary`
	`ID FROM YY/MM/DD HR:MN:SC SIZE CONTENT`
	`0 4442235525 12/05/29 10:50:13 137 Your entry last month has...`
	`2 5553337777 13/08/01 10:24:56 5 First`
	`3 5553337777 13/08/01 10:25:02 6 Second`
		Displays the message contents of incoming texts received by a modem.
		• **all**—Displays the message contents of up to 255 incoming text messages received by the modem.
		• *ID*—Displays the message contents for a specified ID (0-255) of an incoming text message.
		• **summary**—Displays a summary of the incoming text messages received by the modem.

	Command or Action	Purpose
Step 5	end **Example:** `Router# end`	Exits the configuration mode and returns to the privileged EXEC mode.

Step 6	show cellular *unit* sms
	Example:
	`Router#  show cellular 0/2/0 sms`
	`Incoming Message Information`
	`----------`
	`SMS stored in modem = 20`
	`SMS archived since booting up = 0`
	`Total SMS deleted since booting up = 0`
	`Storage records allocated = 25`
	`Storage records used = 20`
	`Number of callbacks triggered by SMS = 0`
	`Number of successful archive since booting up = 0`
	`Number of failed archive since booting up = 0`
	
	`Outgoing Message Information`
	`----------`
	`Total SMS sent successfully = 0`
	`Total SMS send failure = 0`
	`Number of outgoing SMS pending = 0`
	`Number of successful archive since booting up = 0`
	`Number of failed archive since booting up = 0`
	`Last Outgoing SMS Status = SUCCESS`
	`Copy-to-SIM Status = 0x0`
	`Send-to-Network Status = 0x0`
	`Report-Outgoing-Message-Number:`
	`Reference Number = 0`
	`Result Code = 0x0`
	`Diag Code = 0x0 0x0 0x0 0x0 0x0`
	
	`SMS Archive URL = ftp://lab:lab@1.3.150.1/outbox`
		Displays all the information in the text messages sent and received. Message information includes text messages sent successfully, received, archived, and messages pending to be sent. LTE-specific information on errors in case of a FAILED attempt may also be displayed.

Step 7	cellular *unit* lte sms send *number* **Example:** `Router# cellular 0/2/0 lte sms send 15554443333 <sms text>`	Enables a user to send a LTE/5G band SMS message to other valid recipients, provided they have a text message plan. The *number* argument is the telephone number of the SMS message recipient. **Note** 10-digit or 11-digit (phone) numbers are the proper numerical format for sending a text. For example, ########## or 1##########. Seven digits are not supported.
Step 8	cellular *unit* lte sms delete [all | *id*] **Example:**	(Optional) Deletes one message ID or all of the stored messages from memory.

	Command or Action	Purpose
	`Router# cellular 0/2/0 lte sms delete [ all | id ]`	

Configuring Modem DM Log Collection

Diagnostic Monitor (DM) Log is a modem's feature that captures data transactions between the modem and the network over the radio frequency interface. This feature is a useful tool for troubleshooting 3G and 4G data connectivity or performance issues.

Once a DM log file is captured, diagnostic software tools, such as Sierra Wireless SwiLog and Qualcomm QXDM, can be used to decode the DM log file to understand the issues. A member of Cisco TAC can help with decoding the DM log files.

To configure DM log collection, enter the following commands, starting in privileged EXEC mode.

Procedure

	Command or Action	Purpose
Step 1	**configure terminal** **Example:** `Router# configure terminal`	Enters global configuration mode.
Step 2	**controller cellular** *slot* **Example:** `Router(config)# controller cellular 0/2/0`	Enters cellular controller configuration mode.
Step 3	**lte modem dm-log** {**autoshop** {**link-down** | **timer** *time*} | **enable** | **filesize** *size* | **filter**} **bootflash:***file* | **flash:***file*} **rotation** | **size** *log-size*} **Example:** `Router(config-controller)# lte modem dm-log enable`	Configures DM logging for LTE modem. • **autostop**—Automatically stops DM log capturing based on: **link-down**—cellular interface link down event **timer***timer*—amount of time in minutes • **enable**—Starts DM log capturing. • **filesize** *size*—Specifies the maximum log file size, in MB for each DM log file before creating another DM log file. Range is from 1 to 64. Default is 20. • **filter** *location***:***filename*—Specifies the DM log filter to use from the following locations: —bootflash:*file* —flash:*file*

	Command or Action	Purpose
		Note Bootflash and flash are the only valid locationsto store the DM log filter file. **Note** If the DM log filter file is not specified, the generic filter file, which comes with the router will be used. **Note** The DM log filter file needs to be in .sqf format. • **rotation**—Enables continuous DM log capturing by replacing the oldest DM log files with the latest. • **size** *log-size*—Specifies the maximum total size in MB of all DM log files that can be allowed in the bootflash or flash before modem stops capturing DM log files. If rotation is enabled, the oldest DM files is replaced with the latest DM file to meet this size configuration.
Step 4	**end** **Example:** `Router(config-controller)# end`	Returns to privileged EXEC mode.

Step 5	**show cellular** *unit* **logs dm-log**
	Example:
	`Router# show cellular 0/2/0 logs dm-log`
	`Integrated DM logging is on`
	`output path = Utility Flash`
	`filter = MC74xx generic -`
	`v11026_Generic_GSM_WCDMA_LTE_IP-no-data-packets.sqf`
	`maximum log size = 0`
	`maximum file size = 0`
	`log rotation = disabled`
	
	`33 packets sent to the modem, 4663 bytes,`
	`0 errors`
	`28521 packets received from the modem,`
	`13500758 bytes, 0 input drops`
	`28521 packets stored in utility flash,`
	`13500758 bytes`
	
	`current file size = 13500758`
	`current log size = 13500758`
	`total log size = 13500758`
	`Utility Flash DM log files = (1) files`
		(Optional) Displays DM log configuration and statistics.

Example

The following example shows how to:

- Specifies the maximum size of all DM log files that can be stored in bootflash or flash to 512 MB
- Specifies the maximum size of each DM log file to 32 MB
- Uses MC7xxx_GPS_Log.sqf DM log filter in the flash
- Enable rotation
- Enables DM log capturing

```
Router(config-controller)# controller cell 0/2/0
Router(config-controller)# lte modem dm-log filesize 512
```

```
Router(config-controller)# controller cell 0/2/0
Router(config-controller)# lte modem dm-log filesize 32
```

The following example shows how to specify the filter file for LTE:

```
Router(config-controller)# controller cell 0/2/0
Router(config-controller)# lte modem dm-log filter flash:MC7xxx_GPS_Log.sqf
```

The following example shows how to enable DM log rotation for LTE:

```
Router(config-controller)# controller cell 0/2/0
Router(config-controller)# lte modem dm-log rotation
```

The following example shows how to specify the maximum log size for LTE:

```
Router(config-controller)# controller cell 0/2/0
Router(config-controller)# lte modem dm-log enable
```

The following example shows how to enable DM log rotation for LTE:

```
Router(config-controller)# controller cell 0/2/0
Router(config-controller)# end
```

The following example shows how to specify the maximum log size for LTE:

```
Router(config-controller)# controller cell 0/2/0
Router(config-controller)# lte modem dm-log size 1024
```

The following example shows how to enable DM log rotation for LTE:

```
Router(config-controller)# controller cell 0/2/0
Router(config-controller)# end
```

The following example shows what was configured on the router for DM log feature:

```
Router#show running-config | section controller
controller Cellular 0/2/0
 lte modem dm-log filter flash:MC7xxx_GPS_Log.sqf
 lte modem dm-log size 512
 lte modem dm-log filesize 32
 lte modem dm-log rotation
 lte modem dm-log enable
 lte modem dm-log size 1024
```

The following displays DM log configuration and statistics

```
Router#show cellular 0/2/0 logs dm-log
Integrated DM logging is on
output path = Utility Flash
filter = flash:MC7xxx_GPS_Log.sqf
maximum log size = 536870912
```

```
maximum file size = 33554432
log rotation = enabled

32 packets sent to the modem, 3879 bytes, 0 errors
158324 packets received from the modem, 75971279 bytes, 0 input drops
158324 packets stored in utility flash, 75971279 bytes

current file size = 8863042
current log size = 75971279
total log size = 75971279
Utility Flash DM log files =  (3) files
end
```

The following shows the DM log files created:

```
Router#dir flash:dmlog*
Directory of bootflash:/dmlog*

Directory of bootflash:/

   27  -rw-    33554069   Jun 7 2018 18:08:46 -08:00  dmlog-slot2-20180607-180628.bin
   28  -rw-    33554168   Jun 7 2018 18:11:25 -08:00  dmlog-slot2-20180607-180846.bin
   29  -rw-    14188544   Jun 7 2018 18:12:37 -08:00  dmlog-slot2-20180607-181125.bin
2885718016 bytes total (521891840 bytes free)
lte modem dm-log size 1024
```

The following shows hot to disable/stop DM log capturing:

```
Router(config)#controller cellular 0/2/0
Router(config-controller)#no lte modem dm-log enable
Router(config-controller)#end
```

Enabling Modem Crashdump Collection

Modem crashdump collection is useful in debugging firmware crash. To collect crash data, the modem has to be pre-configured so that it will stay in memdump mode after a crash. Memdump mode is a special boot-and-hold mode for the memdump utility to collect crash data.

For earlier releases, the crashdump collection required the PC to be connected to the router using a USB cable or a special RJ45-USB cable on a non-HSPA+7 3G module.

As part of the 3G and 4G serviceability enhancement, the crashdump collection utility is integrated into Cisco IOS.

To enable modem crashdump collection, perform the following steps.

Note The integrated modem crashdump collection feature is supported only on 3G HSPA and LTE/5G based SKUs.

Before you begin

Ensure that the following prerequisites are met before attempting to enable crashdump logging:

- The modem needs to be provisioned for modem crashdump collection. Contact Cisco TAC for details.
- The modem should be in crash state. Run tests that will result in modem firmware crash. A “MODEM_DOWN” message on the router console or syslog is indicative of modem firmware crash.

Note After the modem firmware crashes, the modem is available for crashdump log collection only. Data calls cannot be made.

Procedure

	Command or Action	Purpose
Step 1	test { cell-cwan } *unit* modem-crashdump { on *location* | off } **Example:** `Router# test cell-host 0/2/0 modem-crashdump on local_uf`	Enables or disables modem crashdump collection. • **cell-host** —Keyword for fixed platform. • **cell-cwan** — Keyword for LTE on a modular inside platform. • *unit* —For LTE module, this is the router slot, module slot, and port separated by slashes (for example, 0/2/0). For fixed platform, this is the number 0. • **on** Enables crashdump log collection. • *location* —Specifies the destination URL where the modem crashdump logs will be stored. • **off** —Disables crashdump log collection.

Displaying Modem Log Error and Dump Information

As part of the 3G serviceability enhancement, commands strings (**at!err** and **at!gcdump**) can be sent to the modem using Cisco IOS CLI rather than setting up a reverse telnet session to the cellular modem to obtain log error and dump information.

To obtain log error and dump information, perform the following steps.

Note The modem log error and dump collection feature is supported only on 3G SKUs.

Procedure

	Command or Action	Purpose
Step 1	**show cellular** *unit* **log error** **Example:** `Router# show cellular 0/2/0 log error`	Shows modem log error and dump information.
Step 2	**test cellular** *unit* **modem-error-clear** **Example:** `Router# test cellular 0/2/0 modem-error-clear`	(Optional) Clears out the error and dump registers. By default, error and dump registers are not cleared out after a read. This command changes the operation so that registers are cleared once they are read. As a result, the AT command strings are changed to "**at!errclr=–1**" for CDMA and "**at!err=0**" for GSM modems.

Verifying the LTE/5G Router Information

You can verify the configuration by using the following show commands:

show version

```
Router#show version
Cisco IOS XE Software, Version BLD_V166_THROTTLE_LATEST_20170622_080605_V16_6_0_237
Cisco IOS Software [Everest], ISR Software (ARMV8EB_LINUX_IOSD-UNIVERSALK9_IAS-M),
Experimental Version 16.6.20170622:072729
[v166_throttle-/scratch/mcpre/BLD-BLD_V166_THROTTLE_LATEST_20170622_080605 108]
Copyright (c) 1986-2017 by Cisco Systems, Inc.
Compiled Thu 22-Jun-17 03:39 by mcpre


Cisco IOS-XE software, Copyright (c) 2005-2017 by cisco Systems, Inc.
All rights reserved.  Certain components of Cisco IOS-XE software are
licensed under the GNU General Public License ("GPL") Version 2.0.  The
software code licensed under GPL Version 2.0 is free software that comes
with ABSOLUTELY NO WARRANTY.  You can redistribute and/or modify such
GPL code under the terms of GPL Version 2.0.  For more details, see the
documentation or "License Notice" file accompanying the IOS-XE software,
or the applicable URL provided on the flyer accompanying the IOS-XE
software.


ROM: IOS-XE ROMMON

Router uptime is 2 hours, 16 minutes
Uptime for this control processor is 2 hours, 18 minutes
System returned to ROM by Reload Command
System image file is
"bootflash:c1100-universalk9_ias.BLD_V166_THROTTLE_LATEST_20170622_080605_V16_6_0_237.SSA.bin"
Last reload reason: Reload Command



This product contains cryptographic features and is subject to United
States and local country laws governing import, export, transfer and
use. Delivery of Cisco cryptographic products does not imply
```

```
third-party authority to import, export, distribute or use encryption.
Importers, exporters, distributors and users are responsible for
compliance with U.S. and local country laws. By using this product you
agree to comply with applicable laws and regulations. If you are unable
to comply with U.S. and local laws, return this product immediately.

A summary of U.S. laws governing Cisco cryptographic products may be found at:
http://www.cisco.com/wwl/export/crypto/tool/stqrg.html

If you require further assistance please contact us by sending email to
export@cisco.com.



Suite License Information for Module:'esg'

-------------------------------------------------------------------------------
Suite                 Suite Current         Type           Suite Next reboot
-------------------------------------------------------------------------------

Technology Package License Information:

-----------------------------------------------------------------
Technology    Technology-package           Technology-package
              Current       Type           Next reboot
-----------------------------------------------------------------

cisco C1111-8PLTEAW (1RU) processor with 1464691K/6147K bytes of memory.
Processor board ID FGL21071SK4
1 Virtual Ethernet interface
11 Gigabit Ethernet interfaces
2 Cellular interfaces
32768K bytes of non-volatile configuration memory.
4194304K bytes of physical memory.
6598655K bytes of flash memory at bootflash:.
978928K bytes of USB flash at usb0:.
0K bytes of WebUI ODM Files at webui:.
```

show platform

```
router# show platform
Chassis type: C1111-8PLTELAWN

Slot      Type                State                 Insert time (ago)
--------- ------------------- --------------------- -----------------
0         C1111-8PLTELAWN     ok                    00:04:56
 0/0      C1111-2x1GE         ok                    00:02:41
 0/1      C1111-ES-8          ok                    00:02:40
 0/2      C1111-LTE           ok                    00:02:41
 0/3      ISR-AP1100AC-N      ok                    00:02:41
R0        C1111-8PLTELAWN     ok, active            00:04:56
F0        C1111-8PLTELAWN     ok, active            00:04:56
P0        PWR-12V             ok                    00:04:30

Slot      CPLD Version        Firmware Version
--------- ------------------- ---------------------------------------
0         17100501            16.6(1r)RC3
R0        17100501            16.6(1r)RC3
F0        17100501            16.6(1r)RC3
```

show interfaces

```
router#sh interface cellular 0/2/0
Cellular0/2/0 is up, line protocol is up
  Hardware is LTE Adv CAT6 - Europe/North America Multimode LTE/DC-HSPA+/HSPA+/HSPA/UMTS/
  Internet address is 192.0.2.1/32
  MTU 1500 bytes, BW 50000 Kbit/sec, DLY 20000 usec,
     reliability 255/255, txload 1/255, rxload 1/255
  Encapsulation HDLC, loopback not set
  Keepalive not supported
  DTR is pulsed for 1 seconds on reset
  Last input never, output 00:00:42, output hang never
  Last clearing of "show interface" counters never
  Input queue: 0/375/0/0 (size/max/drops/flushes); Total output drops: 0
  Queueing strategy: fifo
  Output queue: 0/40 (size/max)
  5 minute input rate 0 bits/sec, 0 packets/sec
  5 minute output rate 0 bits/sec, 0 packets/sec
     5 packets input, 460 bytes, 0 no buffer
     Received 0 broadcasts (0 IP multicasts)
     0 runts, 0 giants, 0 throttles
     0 input errors, 0 CRC, 0 frame, 0 overrun, 0 ignored, 0 abort
     21 packets output, 1692 bytes, 0 underruns
     0 output errors, 0 collisions, 8 interface resets
     0 unknown protocol drops
     0 output buffer failures, 0 output buffers swapped out
     0 carrier transitions
router#
```

Configuring Cellular Modem Link Recovery

The cellular modem link recovery feature is disabled by default and it is recommended to enable the link recovery feature.

To enable or disable the cellular modem link recovery feature, if required, perform the following steps:

Procedure

	Command or Action	Purpose
Step 1	**configure terminal** **Example:** `Router# configure terminal`	Enters global configuration mode.
Step 2	**controller cellular** *unit* **Example:** `Router(config)# controller cellular 0/2/0`	Enters cellular controller configuration mode.
Step 3	{**lte**} **modem link-recovery disable** | **no lte** | **modem link-recoverydisable**} **Example:** `Router(config-controller)# lte modem link-recovery disable`	Enables or disables the cellular modem link recovery feature. Enables or disables the cellular modem link recovery feature.

	Command or Action	Purpose

	`Router(config-controller)# no lte modem link-recovery disable`
	
	`Device#show run | sec controller Cellular 0/2/0`
	`controller Cellular 0/2/0`
	`lte modem link-recovery rssi onset-threshold -110`
	`lte modem link-recovery monitor-timer 20`
	`lte modem link-recovery wait-timer 10`
	`lte modem link-recovery debounce-count 6`
	
	`Example:`
	`Device#configure terminal`
	`Device(config)#controller Cellular 0/2/0`
	`Device(config-controller)#lte modem link-recovery monitor-timer 30`
	`Device(config-controller)#lte modem wait-timer 15`
	`Device(config-controller)#lte modem debounce-count 8`
	`Device(config-controller)#lte modem rssi onset-threshold -100`
		Once we enable link-recovery, the default Cisco recommended values for link-recovery parameters are populated.
		
		We can change the values of link-recovery parameters from the default Cisco recommended values, by using cli for each parameter like in example.
		
		Note Changing the default recommended cisco values is not advised as it will impact ideal performance of link-recovery feature.

Step 4	**end** **Example:** `Router(config)# end`	Exits the configuration mode and returns to the privileged EXEC mode.

Cellular Modem Link Recovery Parameters

There are four configurable parameters to adjust the behavior of cellular link recovery. The default values optimized for the best performance of the feature and changing it is not recommended unless advised by Cisco.

The following table explains the link recovery parameters.:

Table 3: Link Recovery Parameters

Parameter	Description
rssi onset-threshold	This parameter defines the RSSI value below which the link recovery feature triggers additional scrutiny to look for potential issues and take action if needed. The range of this parameter can be set from -90 dBm to -125 dBm. The recommended and default value is -110 dBm.

Parameter	Description
monitor-timer	This parameter determines how often link recovery looks for potential issues. The default value for this parameter is 20 seconds meaning that link recovery feature will be triggered every 20 seconds and look at certain parameters to determine if there is a potential issue. You can configure the monitor-timer range between 20 to 60 seconds. Increasing the monitor timer value above 20 seconds will increase the response time of the feature.
wait-timer and debounce-count	The wait-timer parameter is used in conjunction with the debounce-count parameter to perform more frequent, additional checks, once the link recovery feature has identified a potential issue that needs to be recovered from, with a modem power-cycle. The default value for wait-timer is 10 seconds and the default value for debounce- count is 6. With this setting, once link recovery has identified an inoperative modem state, it performs additional checks every 10 seconds, up to 6 times, to determine if the issue has been resolved without a modem power-cycle. Reducing the debounce-count and the wait-timer makes faster link recovery, while reducing them may increase the time for recovery. The configurable range for wait-timer is 5-60 seconds. The configurable range for debounce-count is 6-20 seconds.

Verifying the Cellular Modem Link Recovery Configuration

To determine if the cellular modem link recovery is enabled, use the **show controller cellularunit** command. In this example, the cellular modem link recovery feature related information is highlighted.

```
Router# show controller cellular 0/2/0Interface Cellular0/2/0
LTE Module - Multimode LTE/DC-HSPA+/HSPA+/HSPA/UMTS/EDGE/GPRS unit 2

Cellular Modem Configuration
============================
Modem is recognized as valid
Power save mode is OFF
manufacture id =  0x00001199     product id = 0x000068C0
Sierra Wireless unknown modem
Modem Uplink Speed = 50000 kbit.
Modem Downlink Speed = 300000 kbit.

GPS Feature = enabled
GPS Status =  NMEA Disabled
GPS Mode = not configured

Cellular Dual SIM details:
--------------------------
SIM 0 is present
SIM 1 is not present
```

```
SIM 0 is active SIM

Module Reload Statistics
------------------------
Soft OIR reloads = 0
Hard OIR reloads = 0
------------------------

Modem Management Statistics
---------------------------
Modem resets = 1
Modem timeouts = 0
Link recovery is ON

Registration check is ON
RSSI threshold value is -110 dBm
Monitor Timer value is 20 seconds
Wait Timer value is 10 seconds
Debounce Count value is 6

Link recovery count is 0
```

When the cellular modem link recovery occurs and modem is power cycled, you can see the %CELLWAN-2-MODEM_DOWN message on the console logs and additionally there is a %CELLWAN-2-LINK_RECOVERY message which indicates that action has been taken by the cellular modem link recovery feature.

Whenever the cellular modem link recovery has occurred, it updates the Modem timeouts counter under the Modem Management Statistics section of the show controller cellular unit command output. Modem parameters at the last timeout section has information that helps to identify the cause of the issue that triggered link recovery

In the following example log, the messages, modem time out counter, and modem parameters at the last time out are highlighted.

***Jul 19 17:15:18.980 PDT: %CELLWAN-2-LINK_RECOVERY: Cellular0/1/0: Cellular Modem has been power cycled**

```
Device#show controller Cellular 0/2/0
Interface Cellular0/2/0
LTE Module - Multimode LTE/DC-HSPA+/HSPA+/HSPA/UMTS/EDGE/GPRS unit 2

Cellular Modem Configuration
============================
Modem is recognized as valid
Power save mode is OFF
manufacture id =  0x00001199     product id = 0x000068C0
Sierra Wireless unknown modem
Modem Uplink Speed = 50000 kbit.
Modem Downlink Speed = 300000 kbit.

GPS Feature = enabled
GPS Status =  NMEA Disabled
GPS Mode = not configured

Cellular Dual SIM details:
--------------------------
SIM 0 is present
SIM 1 is not present
SIM 0 is active SIM

Module Reload Statistics
------------------------
```

```
Soft OIR reloads = 0
Hard OIR reloads = 0
-------------------------
 Modem Management Statistics
---------------------------
Modem resets = 1
Modem user initiated resets = 0
Modem user initiated power-cycles = 0
Modem timeouts = 1
Modem parameters at the last timeout:
         LTE first time attach State was No
         Radio Interface Technology Mode was AUTO
         Operating Mode was Online
         RSSI was -0 dBm
         Packet switch domain status was Not Attached
         Registration state(EMM) was Not Registered
         Downlink traffic was not present
Link recovery is ON
Registration check is ON
RSSI threshold value is -110 dBm
Monitor Timer value is 20 seconds
Wait Timer value is 10 seconds
Debounce Count value is 6
```

Configuration Examples for 3G and 4G Serviceability Enhancement

Example: Sample Output for the show cellular logs dm-log Command

The following shows a sample output of the **show cellular logs dm-log** command:

```
Router# show cellular 0/2/0 logs dm-log
Integrated DM logging is on
filter = generic
maximum log size = 67108864
maximum file size = 20971520
log rotation = disabled
7 packets sent to the modem, 3232 bytes, 0 errors
75 packets received from the modem, 57123 bytes, 0 input drops
75 packets stored in file system, 57123 bytes, 0 errors, 0 aborts
2 max rcv queue size
current file size = 57123
current log size = 57123
total log size = 57123
DM log files: (1 files)
```

Example: Sample Output for the show cellular logs modem-crashdump Command

The following shows a sample output of the **show cellular logs modem-crashdump** command:

```
Router# show cellular 0/2/0 logs modem-crashdump
```

```
Modem crashdump logging: off
Progress = 100%
Last known State = Getting memory chunks
Total consecutive NAKs = 0
Number of retries = 0
Memory Region Info:
1: Full SDRAM [Base:0x0, Length:0x2000000]
2: MDSP RAM A region [Base:0x91000000, Length:0x8000]
3: MDSP RAM B region [Base:0x91200000, Length:0x8000]
4: MDSP RAM C region [Base:0x91400000, Length:0xC000]
5: MDSP Register region [Base:0x91C00000, Length:0x28]
6: ADSP RAM A region [Base:0x70000000, Length:0x10000]
7: ADSP RAM B region [Base:0x70200000, Length:0x10000]
8: ADSP RAM C region [Base:0x70400000, Length:0xC000]
9: ADSP RAM I region [Base:0x70800000, Length:0x18000]
10: CMM Script [Base:0x6A350, Length:0x310]
Router#
```

Configuration Examples for LTE/5G

Example: Basic Cellular Interface Configuration: Cisco LTE/5G

The following example shows how to configure the cellular interface to be used as a primary and is configured as the default route:

```
Router# show running-config
interface Cellular 0/2/0
ip address negotiated
dialer in-band
dialer-group 1
ip route 172.22.1.10 255.255.255.255 cellular 0/2/0
dialer-list 1 protocol ip permit
```

Configuration Examples for Cisco LTE/5G

The following example shows how to configure Cisco LTE/5G:

```
Router# show running-config
Building configuration...
Current configuration : 2991 bytes
!
! Last configuration change at 21:31:48 UTC Mon May 18 2015
!
version 15.5
service timestamps debug datetime msec
service timestamps log datetime msec
service internal
no platform punt-keepalive disable-kernel-core
platform shell
!
hostname C1111-LTEEA
!
boot-start-marker
!
!
!
```

```
logging buffered 10000000
no logging console
enable password lab
!
no aaa new-model
!
!
!
!
!
!
!
subscriber templating
!
multilink bundle-name authenticated
icense udi pid ISR4321/K9 sn FDO181701PZ
!
spanning-tree extend system-id
!
!
redundancy
 mode none
!
!
!
!
controller Cellular 0/2/0
 lte sim data-profile 16 attach-profile 16
 lte gps mode standalone
 lte gps nmea
 lte modem link-recovery disable

 interface GigabitEthernet0/0/1
 ip address 192.0.2.1 255.255.255.0
 ip nat outside

 negotiation auto
!
interface Cellular0/2/0
 ip address negotiated
 ip nat outside
 dialer in-band
 dialer idle-timeout 0
 dialer watch-group 1
 dialer-group 1
 pulse-time 1
!
interface Cellular0/2/1
 no ip address
 shutdown
 dialer in-band
 pulse-time 1
!
!
interface Vlan1
 no ip address
!
no ip nat service dns tcp
no ip nat service dns udp
ip nat inside source list 1 interface Cellular0/2/0 overload
ip forward-protocol nd
ip http server
no ip http secure-server
ip http max-connections 16
```

```
ip tftp source-interface GigabitEthernet0/0/1
ip dns server
ip route 192.0.2.2 192.0.2.3 Cellular0/2/0
ip route 223.255.254.0 255.255.255.0 1.3.0.1
!
!
access-list 1 permit 192.0.2.5 255.255.255.255
dialer watch-list 1 ip 192.0.2.6 255.255.255.255
dialer-list 1 protocol ip permit
!
snmp-server community public RO
snmp-server community private RW
snmp-server community lab RW
snmp-server host 192.0.2.1 public
snmp-server manager
control-plane
!
!
line con 0
 exec-timeout 0 0
 stopbits 1
line aux 0
 exec-timeout 0 0
 stopbits 1
line vty 0 4
 login
 transport input all
!
!
end
```

Cellular Back-off: Example

The following example shows how to configure the cellular back-off feature to stop continuous session activation requests back to the router:

```
Router#show cell 0/2/0 all
Profile 1, Packet Session Status = INACTIVE
Profile 2, Packet Session Status = INACTIVE
Profile 3, Packet Session Status = INACTIVE
.
.
.
Profile 16, Packet Session Status = INACTIVE
Router#
Router#show cell 0/2/0 c n
Current System Time = Sun Jan 6 0:8:37 1980
Current Service Status = Normal
Current Service = Packet switched
Current Roaming Status = Roaming
Network Selection Mode = Automatic
Network = 123 456
Mobile Country Code (MCC) = 123
Mobile Network Code (MNC) = 456
Packet switch domain(PS) state = Attached
LTE Carrier Aggregation state = Deconfigured
Registration state(EMM) = Registered
EMM Sub State = Normal Service
Tracking Area Code (TAC) = 1801
Cell ID = 768001
Network MTU is not Available
Router#
Router#ping 192.0.2.1
```

```
Type escape sequence to abort.
Sending 5, 100-byte ICMP Echos to 192.192.187.254, timeout is 2 seconds:

*Dec 20 23:22:28.025: %CELLWAN-6-CELLULAR_BACKOFF_START: Cellular0/2/0: Cellular back-off
has started on PDN 0....
Success rate is 0 percent (0/5)
Router#

Router#ping 192.0.2.2
Type escape sequence to abort.
RouterSending 5, 100-byte ICMP Echos to 192.0.2.2, timeout is 2 seconds
.
.
.
Router#show cell 0/2/0
Profile 1, Packet Session Status = INACTIVE
Profile 2, Packet Session Status = INACTIVE
Profile 3, Packet Session Status = INACTIVE
Router Call end mode = 3GPP
Router Session disconnect reason type = 3GPP specification defined(6)
Session disconnect reason = Option unsubscribed(33)
Enforcing cellular interface back-off
Period of back-off = 1 minute(s)
Profile 4, Packet Session Status = INACTIVE
...
Profile 16, Packet Session Status = INACTIVE
Router#
Router#show cell 0/2/0 cn
Sending 5, 100-byte ICMP Echos to 192.0.2.2, timeout is 2 seconds:
Router.....
Success rate is 0 percent (0/5)
Router#
Router#ping 192.0.2.5
Type escape sequence to abort.
Sending 5, 100-byte ICMP Echos to 192.0.2.5, timeout is 2 seconds:
Router.....
Success rate is 0 percent (0/5)
Router#show cell 0/2/0 cping 192.0.2.6  Type escape sequence to abort.
RouterSending 5, 100-byte ICMP Echos to 192.0.2.6 , timeout is 2 seconds:
Router.....
RouterSuccess rate is 0 percent (0/5)
Router#ping 192.0.2.6
Type escape sequence to abort.
Sending 5, 100-byte ICMP Echos to 192.0.2.6 , timeout is 2 seconds:
.....
Success rate is 0 percent (0/5)
Router#ping 192.0.2.6
Router#sh cell 0/2/0 c
Profile 1, Packet Session Status = INACTIVE
Profile 2, Packet Session Status = INACTIVE
Profile 3, Packet Session Status = INACTIVE
RouterCall end mode = 3GPP
RouterSession disconnect reason type = 3GPP specification defined(6)
RouterSession disconnect reason = Option unsubscribed(33)
RouterEnforcing cellular interface back-off
 Period of back-off = 1 minute(s)
Profile 4, Packet Session Status = INACTIVE
...
Profile 16, Packet Session Status = INACTIVE
Profile 4, Packet Session Status = INACTIVE
Profile 5, Packet Session Status = INACTIVE
.
.
.
```

```
Profile 16, Packet Session Status = INACTIVE
```

Example: GRE Tunnel over Cellular Interface Configuration

The following example shows how to configure the static IP address when a GRE tunnel interface is configured with **ip address unnumbered** *cellular interface*:

Note The GRE tunnel configuration is supported only if the service providers provide a public IP address on the LTE interface.

Note For service providers using a private IP address, the point-to-point static GRE tunnel cannot be set up with a private IP address at one end and a public IP address on the other end.

```
interface Tunnel2
ip unnumbered <internal LAN interface GE0/0 etc.>
tunnel source Cellular0/2/0
tunnel destination a.b.c.d
interface Cellular0/2/0
ip address negotiated
no ip mroute-cache
dialer in-band
dialer-group 1
```

Example: LTE/5G as Backup with NAT and IPSec

The following example shows how to configure the LTE/5G on the router as backup with NAT and IPsec:

The receive and transmit speeds cannot be configured. The actual throughput depends on the cellular network service.

For service providers using a private IP address, use the **crypto ipsec transform-set esp** command (that is, esp-aes esp-sha256-hmac...).

```
ip dhcp excluded-address 10.4.0.254
!
ip dhcp pool lan-pool
   network 10.4.0.0 255.255.0.0
   dns-server 10.4.0.254
   default-router 10.4.0.254
!
!
crypto isakmp policy 1
 encr 3des
 authentication pre-share
crypto isakmp key  address a.b.c.d
!
!
crypto ipsec transform-set  ah-sha-hmac esp-3des
!
crypto map gsm1 10 ipsec-isakmp
 set peer a.b.c.d
```

```
 set transform-set
 match address 103
!
interface ATM0/2/0
 no ip address
 ip virtual-reassembly
 load-interval 30
 no atm ilmi-keepalive
 dsl operating-mode auto
!
interface ATM0/2/0.1 point-to-point
 backup interface Cellular0/2/0
ip address negotiated
ip mtu 1492
ip nat outside
ip virtual-reassembly
encapsulation ppp
load-interval 30
dialer pool 2
dialer-group 2
ppp authentication chap callin
ppp chap hostname cisco@dsl.com
ppp chap password 0 cisco
ppp ipcp dns request
crypto map gsm1

 ip nat outside
 ip virtual-reassembly
 no snmp trap link-status
 pvc 0/35
  pppoe-client dial-pool-number 2
 !
!
interface Cellular0/2/0
 ip address negotiated
 ip nat outside
 ip virtual-reassembly
no ip mroute-cache
 dialer in-band
 dialer idle-timeout 0
dialer-group 1
 crypto map gsm1
!
interface Vlan1
 description used as default gateway address for DHCP clients
 ip address 10.4.0.254 255.255.0.0
 ip nat inside
 ip virtual-reassembly
!
ip local policy route-map track-primary-if
ip route 0.0.0.0 0.0.0.0 Dialer2 track 234
ip route 0.0.0.0 0.0.0.0 Cellular0/3/0 254
!
!
ip nat inside source route-map nat2cell interface Cellular0/2/0 overload
ip nat inside source route-map nat2dsl overload
!
ip sla 1
 icmp-echo 2.2.2.2 source
 timeout 1000
 frequency 2
ip sla schedule 1 life forever start-time now
access-list 1 permit any
access-list 101 deny ip 10.4.0.0 0.0.255.255 10.0.0.0 0.255.255.255
```

```
access-list 101 permit ip 10.4.0.0 0.0.255.255 any
access-list 102 permit icmp any host 2.2.2.2
access-list 103 permit ip 10.4.0.0 0.0.255.255 10.0.0.0 0.255.255.255
dialer-list 1 protocol ip list 1
dialer-list 2 protocol ip permit
!
!
route-map track-primary-if permit 10
 match ip address 102
!
route-map nat2dsl permit 10
 match ip address 101
!
route-map nat2cell permit 10
 match ip address 101
 match interface Cellular0/2/0
!
exec-timeout 0 0
login
 modem InOut
```

Example: SIM Configuration

Locking the SIM Card

The following example shows how to lock the SIM. The italicized text in this configuration example is used to indicate comments and are not be seen when a normal console output is viewed.

```
Router# sh cellular 0/2/0 security
Card Holder Verification (CHV1) = Disabled
SIM Status = OK
SIM User Operation Required = None
Number of CHV1 Retries remaining = 3
Router# !! SIM is in unlocked state.!
Router# cellular 0/2/0 lte sim lock 1111
!!!WARNING: SIM will be locked with pin=1111(4).
Do not enter new PIN to lock SIM. Enter PIN that the SIM is configured with.
Call will be disconnected!!!
Are you sure you want to proceed?[confirm]
Router#
Apr 26 19:35:28.339: %CELLWAN-2-MODEM_DOWN: Modem in NIM slot 0/2 is DOWN
Apr 26 19:35:59.967: %CELLWAN-2-MODEM_UP: Modem in NIM slot 0/2 is now UP
Router#
Router# sh cellular 0/2/0 security
Card Holder Verification (CHV1) = Enabled
SIM Status = Locked
SIM User Operation Required = Enter CHV1
Number of CHV1 Retries remaining = 3
Router# !! SIM is in locked state.!
```

Unlocking the SIM Card

The following example shows how to unlock the SIM. The italicized text throughout this configuration example is used to indicate comments and will not be seen when a normal console output is viewed.

```
Router# sh cellular 0/2/0 security
Card Holder Verification (CHV1) = Enabled
SIM Status = Locked
SIM User Operation Required = Enter CHV1
```

```
Number of CHV1 Retries remaining = 3
Router# !! SIM is in locked state.!
Router# cellular 0/2/0 lte sim unlock 1111
!!!WARNING: SIM will be unlocked with pin=1111(4).
Do not enter new PIN to unlock SIM. Enter PIN that the SIM is configured with.
Call will be disconnected!!!
Are you sure you want to proceed?[confirm]
Router#
Router# sh cellular 0/2/0 security
Card Holder Verification (CHV1) = Disabled
SIM Status = OK
SIM User Operation Required = None
Number of CHV1 Retries remaining = 3
Router# !! SIM is in unlocked state.!
```

Automatic SIM Authentication

The following example shows how to configure automatic SIM authentication. The italicized text throughout this configuration example is used to indicate comments and will not be seen when a normal console output is viewed.

```
Router# show cellular 0/2/0 security
Card Holder Verification (CHV1) = Disabled
SIM Status = OK
SIM User Operation Required = None
Number of CHV1 Retries remaining = 3
Router# !! SIM is in unlocked state.!Router# cellular 0/2/0 lte sim lock 1111
!!!WARNING: SIM will be locked with pin=1111(4).
Do not enter new PIN to lock SIM. Enter PIN that the SIM is configured with.
Call will be disconnected!!!
Are you sure you want to proceed?[confirm]
Router#
Apr 26 21:22:34.555: %CELLWAN-2-MODEM_DOWN: Modem in NIM slot 0/2 is DOWN
Apr 26 21:23:06.495: %CELLWAN-2-MODEM_UP: Modem in NIM slot 0/2 is now UP
Router#
Router# sh cellular 0/2/0 security
Card Holder Verification (CHV1) = Enabled
SIM Status = Locked
SIM User Operation Required = Enter CHV1
Number of CHV1 Retries remaining = 3
Router# !! SIM is in locked state. SIM needs to be in locked state for SIM authentication
to ! work.!Router#
Router# configure terminal
Enter configuration commands, one per line.  End with CNTL/Z.
Router(config)# controller cellular 0/2/0
Router(config-controller)# lte sim authenticate 0 1111
CHV1 configured and sent to modem for verification
Router(config-controller)# end
Router#
Apr 26 21:23:50.571: %SYS-5-CONFIG_I: Configured from console by console
Router#
Router# sh cellular 0/2/0 security
Card Holder Verification (CHV1) = Enabled
SIM Status = OK
SIM User Operation Required = None
Number of CHV1 Retries remaining = 3
Router#!! SIM is now in locked state but it can be used for connectivity since authentication
 is ! good. Authentication can be saved in the router configuration so that when you boot
up ! the router with the same locked SIM, connection can be established with the correct !
 Cisco IOS configuration.!
```

Changing the PIN Code

The following example shows how to change the assigned PIN code. The italicized text throughout this configuration example is used to indicate comments and will not be seen when a normal console output is viewed.

```
Router# sh cellular 0/2/0 security
Card Holder Verification (CHV1) = Disabled
SIM Status = OK
SIM User Operation Required = None
Number of CHV1 Retries remaining = 3
Router#!! SIM is in unlocked state.!Router#
Router# cellular 0/2/0 lte sim lock 1111
!!!WARNING: SIM will be locked with pin=1111(4).
Do not enter new PIN to lock SIM. Enter PIN that the SIM is configured with.
Call will be disconnected!!!
Are you sure you want to proceed?[confirm]
Router#
Apr 26 21:58:11.903: %CELLWAN-2-MODEM_DOWN: Modem in NIM slot 0/2 is DOWN
Apr 26 21:58:43.775: %CELLWAN-2-MODEM_UP: Modem in NIM slot 0/2 is now UP
Router#
Router# sh cellular 0/2/0 security
Card Holder Verification (CHV1) = Enabled
SIM Status = Locked
SIM User Operation Required = Enter CHV1
Number of CHV1 Retries remaining = 3
Router#!! SIM is in locked state. SIM needs to be in locked state to change its PIN.!Router#
Router# cellular 0/2/0 lte sim change-pin 1111 0000
!!!WARNING: SIM PIN will be changed from:1111(4) to:0000(4)
Call will be disconnected. If old PIN is entered incorrectly in 3 attempt(s), SIM will be
blocked!!!
Are you sure you want to proceed?[confirm]
Resetting modem, please wait...
CHV1 code change has been completed. Please enter the new PIN in controller configuration
for verfication
Router#
Apr 26 21:59:16.735: %CELLWAN-2-MODEM_DOWN: Modem in NIM slot 0/2 is DOWN
Apr 26 21:59:48.387: %CELLWAN-2-MODEM_UP: Modem in NIM slot 0/2 is now UP
Router#
Router#
Router# sh cellular 0/2/0 security
Card Holder Verification (CHV1) = Enabled
SIM Status = Locked
SIM User Operation Required = Enter CHV1
Number of CHV1 Retries remaining = 3
Router#!! SIM stays in locked state, as expected, but with new PIN.!Router# cellular 0/2/0
 lte sim unlock 0000
!!!WARNING: SIM will be unlocked with pin=0000(4).
Do not enter new PIN to unlock SIM. Enter PIN that the SIM is configured with.
Call will be disconnected!!!
Are you sure you want to proceed?[confirm]
Router#
Router# show cellular 0/2/0 security
Card Holder Verification (CHV1) = Disabled
SIM Status = OK
SIM User Operation Required = None
Number of CHV1 Retries remaining = 3
Router#!! Unlock with new PIN is successful. Hence, changing PIN was successful.!
```

Configuring an Encrypted PIN

The following example shows how to configure automatic SIM authentication using an encrypted PIN. The italicized text throughout this configuration example is used to indicate comments and will not be seen when a normal console output is viewed.

```
Router# configure terminal
Enter configuration commands, one per line.  End with CNTL/Z.
Router(config)# service password-encryption
Router(config)# username SIM privilege 0 password 1111
Router(config)# do sh run | i SIM
username SIM privilege 0 password 7 055A575E70.!! Copy the encrypted level 7 PIN. Use this
 scrambled PIN in the SIM authentication ! command.!

Router(config)# controller cellular 0/2/0
Router(config-controller)# lte sim authenticate 7 055A575E70
CHV1 configured and sent to modem for verification
Router(config-controller)# exit
Router(config)# no username SIM
Router(config)# end
May 14 20:20:52.603: %SYS-5-CONFIG_I: Configured from console by console
```

Upgrading the Modem Firmware

The following table describes the Sierra Wireless modems that are supported on Cisco LTE/5G. The firmware for the modem is upgradable using Cisco IOS commands. The firmware is a Crossword Express (cwe) file and can be downloaded from the wireless software download page on Cisco.com.

Note Firmware upgrade is supported on utility flash.

Use only Cisco certified firmware. Using a firmware version not certified by Cisco may impact the wireless service provider network adversely.

Caution Do not disconnect power or switch the router off during the firmware upgrade process. This may result in permanent modem failure.

Note Firmware downgrade is not supported.

Table 4: Modem SKUs

SKU	Modem	Firmware	Release
EHWIC-4G-LTE-A	MC7700	MC7700	Cisco 16.6.1 or Later

Upgrading the Modem Firmware Manually With CLI

Procedure

	Command or Action	Purpose
Step 1	Go to the Cisco Wireless WAN software download website at: http://software.cisco.com/download/navigator.html	Provides access to Cisco Wireless WAN software downloads page to select the firmware for Cisco LTE/5G. **Note** This website is only available to registered Cisco.com users.
Step 2	On the Cisco Wireless WAN software page, go to **Products** -> **Cisco Interfaces and Modules** -> **Cisco High-Speed WAN interface Cards** and select your product from the list of available cards.	Select your product for firmware upgrade.
Step 3	Select and download the appropriate firmware.	Download the modem firmware file to flash memory on the router.
Step 4	**terminal monitor** **Example:** `Router# terminal monitor`	Enables the logging console in privileged EXEC mode.
Step 5	**microcode reload cellular** pa-bay slot **modem-provision** [**flash**:<firmware_directory_name>] **Example:** Router# microcode reload cellular 0 2 modem-provision bootflash:/<firmware directory>	Initiates the firmware upgrade process. • pa-bay—Use 0 for LTE/5G. • slot—For LTE/5G, slot number, 0 to 3, where the LTE/5G is plugged in. • For remote download, you can transfer this using the wireless link from Cisco.com onto flash.

Step 6	**show cellular** *0/2/0* **hardware**
	Example:
	`Router# show cellular 0 hardware`
	`Modem Firmware built = 2016/06/30 10:54:05`
	`Hardware Version = 1.0`
	`Device Model ID: EM7455`
		Verifies the firmware upgrade process.

EM74xx Manual Modem Firmware Upgrade: Example

```
Router#  sh cellu 0/2/0 hardware
Modem Firmware Version = SWI9X30C_02.20.03.00
Modem Firmware built = 2016/06/30 10:54:05
Hardware Version = 1.0
Device Model ID: EM7455
```

```
International Mobile Subscriber Identity (IMSI) = <imsi>
International Mobile Equipment Identity (IMEI) = <imei>
Integrated Circuit Card ID (ICCID) = <iccid>
Mobile Subscriber Integrated Services
Digital Network-Number (MSISDN) =
Modem Status = Modem Online
Current Modem Temperature = 44 deg C
PRI SKU ID = 1102526, PRI version = 002.020_000, Carrier = AT&T
OEM PRI version = 006
Router#cd fw_22_vzw
Router#dir
Directory of bootflash:/fw_22_vzw/

227586  -rw-         64389490  Jun 30 2000 10:21:29 +00:00  74XX_02.20.03.22.cwe
227587  -rw-            16951  Jun 30 2000 10:22:10 +00:00
7455_02.20.03.22_Verizon_002.026_000.nvu

6816092160 bytes total (5965422592 bytes free)
Router#cd
Router#microcode reload cellular 0 2 modem-provision bootflash:/fw_22_vzw/
Reload microcode? [confirm]
Log status of firmware download in router flash?[confirm]
Firmware download status will be logged in bootflash:fwlogfile
Microcode Reload Process launched for cwan slot/bay =0/2; hw type=0x102download option = 0

Router#Success !! send FW Upgrade command to card

*****************************************************
 The interface will be Shut Down for Firmware Upgrade
 This will terminate any active data connections.
*****************************************************
**************************
 Modem will be upgraded!
 Upgrade process will take up to 15 minutes. During
 this time the modem will be unusable.
 Please do not remove power or reload the router during
 the upgrade process.
**************************
*Jul  6 10:19:34.701: %LINK-5-CHANGED: Interface Cellular0/2/0, changed state to
administratively down
*Jul  6 10:19:34.701: %LINK-5-CHANGED: Interface Cellular0/2/1, changed state to
administratively down
----------------------------
FIRMWARE INFO BEFORE UPGRADE:
Modem Device ID: EM7455     MODEM F/W Boot Version: SWI9X30C_02.20.03.00
Modem F/W App Version: SWI9X30C_02.20.03.00     Modem SKU ID: 1102526
Modem Package Identifier:      Modem Carrier String: 4
Modem PRI Ver: 000.006     Modem Carrier Name: ATT
Modem Carrier Revision: 002.020_000
----------------------------
FW_UPGRADE: Modem needs CWE, PRI
*Jul  6 10:19:57.978: %CELLWAN-2-MODEM_DOWN: Modem in NIM slot 0/2 is DOWN
FW_UPGRADE: Upgrade begin at Thu Jul  6 10:20:01 2000
FW_UPGRADE: Upgrade end at Thu Jul  6 10:21:14 2000
FW_UPGRADE: Firmware upgrade success.....
FW_UPGRADE: Waiting for modem to become online
----------------------------
FIRMWARE INFO AFTER UPGRADE:
Modem Device ID: EM7455     MODEM F/W Boot Version: SWI9X30C_02.20.03.22
Modem F/W App Version: SWI9X30C_02.20.03.22     Modem SKU ID: 1102526
Modem Package Identifier:      Modem Carrier String: 5
Modem PRI Ver: 000.006     Modem Carrier Name: VERIZON
Modem Carrier Revision: 002.026_000
----------------------------
```

```
F/W Upgrade: Firmware Upgrade has Completed Successfully
*Jul  6 10:21:55.275: %CELLWAN-2-MODEM_RADIO: Cellular0/2/0 Modem radio has been turned on
*Jul  6 10:21:57.276: %LINK-3-UPDOWN: Interface Cellular0/2/0, changed state to down
*Jul  6 10:21:57.277: %LINK-3-UPDOWN: Interface Cellular0/2/1, changed state to down
Router#
Router#  sh cellu 0/2/0 hardware
Modem Firmware Version = SWI9X30C_02.20.03.22
Modem Firmware built = 2016/10/11 16:03:14
Hardware Version = 1.0
Device Model ID: EM7455
International Mobile Subscriber Identity (IMSI) =<imsi>
International Mobile Equipment Identity (IMEI) = <imei>
Integrated Circuit Card ID (ICCID) = <iccid>
Mobile Subscriber Integrated Services
Digital Network-Number (MSISDN) = <msisdn>
Modem Status = Modem Online
Current Modem Temperature = 0 deg C
PRI SKU ID = 1102526, PRI version = 002.026_000, Carrier = Verizon
OEM PRI version = 006
```

Configuring dm-log to Utility Flash: Example

```
Router(config)#controller cellular 0/2/0
Router(config-controller)#lte modem dm-log enable
Router(config-controller)#
*May 8 17:57:09.905: %SYS-5-CONFIG_I: Configured from console by console
Router#
Router#sh cell 0/2/0 log dm-log
Integrated DM logging is on
output path = Utility Flash
filter = bootflash:v11026_Generic_GPS.sqf
maximum log size = 0
maximum file size = 0
log rotation = disabled

32 packets sent to the modem, 4021 bytes, 0 errors
23668 packets received from the modem, 11131720 bytes, 0 input drops
23668 packets stored in utility flash, 11131720 bytes

current file size = 11131720
current log size = 11131720
total log size = 11131720
Utility Flash DM log files: (1) files
```

SNMP MIBs

Note It is recommended that you configure SNMP V3 with authentication/privacy when implementing SNMP SET operation.

The following Simple Management Network Protocol (SNMP) MIBs are supported on Cisco LTE/5G:

- IF-MIB
- ENTITY-MIB
- CISCO-WAN-3G-MIB

- CISCO-WAN-CELL-EXT-MIB

For the CISCO-WAN-3G-MIB, the following tables and sub-tables are supported for 3G and LTE technologies:

- ciscoWan3gMIB(661)
- ciscoWan3gMIBNotifs(0)
- ciscoWan3gMIBObjects(1)
- c3gWanCommonTable(1)
- c3gWanGsm(3)
- c3gGsmIdentityTable(1)
- c3gGsmNetworkTable(2)
- c3gGsmPdpProfile(3)
- c3gGsmPdpProfileTable(1)
- c3gGsmPacketSessionTable(2)
- c3gGsmRadio(4)
- c3gGsmRadioTable(1)
- c3gGsmSecurity(5)
- c3gGsmSecurityTable(1)

For the CISCO-WAN-CELL-EXT-MIB, the following tables and sub-tables are supported for LTE technology only:

- ciscoWanCellExtMIB(817)
- ciscoWanCellExtMIBNotifs(0)
- ciscoWanCellExtMIBObjects(1)
- ciscoWanCellExtLte(1)
- cwceLteRadio(1)
- cwceLteProfile(2)

You can download the MIBs from the Cisco MIB Locator at http://www.cisco.com/go/mibs.

SNMP LTE/5G Configuration: Example

The following example describes how to configure 3G 4G MIB trap on the router:

```
controller Cellular 0/2/0
 lte event rssi onset mib-trap All-lte
 lte event rssi onset threshold -100
 lte event rssi abate mib-trap All-lte
 lte event rssi abate threshold -90
 lte event temperature onset mib-trap
 lte event temperature onset threshold 55
 lte event temperature abate mib-trap
```

```
lte event temperature abate threshold 50
lte event modem-state mib-trap all
lte event service mib-trap
lte event network mib-trap
lte event connection-status mib-trap All-lte
lte event rsrp onset mib-trap All-lte
lte event rsrp onset threshold -85
lte event rsrp abate mib-trap All-lte
lte event rsrp abate threshold -80
lte event rsrq onset mib-trap All-lte
lte event rsrq onset threshold -8
lte event rsrq abate mib-trap All-lte
lte event rsrq abate threshold -6
```

The following example describes how to configure SNMP capability on the router:

```
snmp-server group neomobilityTeam v3 auth notify 3gView
snmp-server view 3gView ciscoWan3gMIB included
snmp-server community neomobility-test RW snmp-server community public RW
snmp-server enable traps c3g
snmp server enable traps LTE
snmp-server host 172.19.153.53 neomobility c3g snmp-server host 172.19.152.77 public c3g
snmp-server host 172.19.152.77 public udp-port 6059
```

The following example describes how to configure an external host device to communicate with the router through SNMP:

```
setenv SR_MGR_CONF_DIR /users/<userid>/mibtest
setenv SR_UTIL_COMMUNITY neomobility-test
setenv SR_UTIL_SNMP_VERSION -v2c
setenv SR_TRAP_TEST_PORT 6059
```

Troubleshooting

This section provides the essential information and resources available for troubleshooting the Cisco LTE/5G feature.

Verifying Data Call Setup

To verify the data call setup, follow these steps:

1. After you create a modem data profile using the cellular profile create command and configuring DDR on the cellular interface, send a ping from the router to a host across the wireless network.
2. If the ping fails, debug the failure by using the following debug and show commands:
3. **debug chat**
4. **debug modem**
5. **debug dialer**
6. **show cellular all**
7. **show controller cell***0/2/0*
8. **show interface cellular**
9. **show running-config**

10. **show ip route**
11. **show platform**
12. Save the output from these commands and contact your system administrator.

Checking Signal Strength

If the Received Signal Strength Indication (RSSI) level is very low (for example, if it is less than –110 dBm), follow these steps:

Procedure

	Command or Action	Purpose
Step 1	Check the antenna connection. Make sure the TNC connector is correctly threaded and tightened.	
Step 2	If you are using a remote antenna, move the antenna cradle and check if the RSSI has improved.	
Step 3	Contact your wireless service provider to verify if there is service availability in your area.	

Verifying Service Availability

The following is a sample output for the **show cellular all** command for a scenario where the antenna is disconnected and a modem data profile has not been created.

```
Router# show cellular 0/2/0 all
Hardware Information
====================
Modem Firmware Version = SWI9X30C_02.20.03.00
Modem Firmware built = 2016/06/30 10:54:05
Hardware Version = 1.0
Device Model ID: EM7455
International Mobile Subscriber Identity (IMSI) = 123456000031546
International Mobile Equipment Identity (IMEI) = 356129070052334
Integrated Circuit Card ID (ICCID) = 8949001508130031546
Mobile Subscriber Integrated Services
Digital Network-Number (MSISDN) =
Modem Status = Modem Online
Current Modem Temperature = 42 deg C
PRI SKU ID = 1102526, PRI version = 002.017_000, Carrier = Generic
OEM PRI version = 002

Profile Information
====================

Profile 1 = ACTIVE* **
--------
PDP Type = IPv4v6
PDP address = 29.29.29.196
PDP IPV6 address = 2001:2678:2680:5FD7:DDE7:70E1:DC07:CCB7/64  Scope: Global
```

```
Access Point Name (APN) = broadband
Authentication = None
        Primary DNS address = 8.0.0.8
        Secondary DNS address = 8.8.4.4
        Primary DNS IPV6 address = 2001:4860:4860:0:0:0:0:8888
        Secondary DNS IPV6 address = 2001:4860:4860:0:0:0:0:8844

Profile 2 = ACTIVE
--------
PDP Type = IPv4v6
PDP address = 21.21.21.206
PDP IPV6 address = 2001:567A:567A:1480:5DD6:18D1:BD63:49DA/64  Scope: Global
Access Point Name (APN) = basic
Authentication = None
        Primary DNS address = 171.70.168.183
        Secondary DNS address = 8.8.8.8
        Primary DNS IPV6 address = 2001:4860:4860:0:0:0:0:8888
        Secondary DNS IPV6 address = 2001:4860:4860:0:0:0:0:8844

Profile 3 = INACTIVE
--------
PDP Type = IPv4
Access Point Name (APN) = mpdn
Authentication = None

Profile 4 = INACTIVE
--------
PDP Type = IPv4
Access Point Name (APN) = broadband
Authentication = None

Profile 5 = INACTIVE
--------
PDP Type = IPv4
Access Point Name (APN) = cisco.gw4.vzwentp
Authentication = None

Profile 6 = INACTIVE
--------
PDP Type = IPv4
Access Point Name (APN) = mobility-de1
Authentication = None

Profile 7 = INACTIVE
--------
PDP Type = IPv4
Access Point Name (APN) = mobility-de2
Authentication = None

Profile 8 = INACTIVE
--------
PDP Type = IPv4
Access Point Name (APN) = broadband
Authentication = None

Profile 9 = INACTIVE
--------
PDP Type = IPv4
Access Point Name (APN) = mpdndt-qos
Authentication = None

Profile 10 = INACTIVE
--------
PDP Type = IPv4
```

```
Access Point Name (APN) = mobility-de2
Authentication = None

Profile 11 = INACTIVE
--------
PDP Type = IPv4
Access Point Name (APN) = broadband
Authentication = None

Profile 12 = INACTIVE
--------
PDP Type = IPv4
Access Point Name (APN) = wfqos
Authentication = CHAP
Username: ipv4v6
Password:

Profile 13 = INACTIVE
--------
PDP Type = IPv4
Access Point Name (APN) = broadband
Authentication = CHAP
Username: ipv4v6
Password:

Profile 14 = INACTIVE
--------
PDP Type = IPv4
Access Point Name (APN) = mobility-de2
Authentication = CHAP
Username: ipv4v6
Password:

Profile 15 = INACTIVE
--------
PDP Type = IPv4
Access Point Name (APN) = aaaauth
Authentication = CHAP
Username: ipv4v6
Password:

Profile 16 = INACTIVE
--------
PDP Type = IPv4
Access Point Name (APN) = broadband
Authentication = CHAP
Username: ipv4v6
Password:

  * - Default profile
 ** - LTE attach profile


Configured default profile for active SIM 0 is profile 1.


Data Connection Information
===========================
Profile 1, Packet Session Status = ACTIVE
        Cellular0/2/0:
        Data Packets Transmitted = 198 ,  Received = 209
        Data Transmitted = 14410 bytes, Received = 24882 bytes
        IP address = 29.29.29.196
        IPV6 address = 2001:2678:2680:5FD7:DDE7:70E1:DC07:CCB7/64  Scope: Global
```

```
        Primary DNS address = 8.0.0.8
        Secondary DNS address = 8.8.4.4
        Primary DNS IPV6 address = 2001:4860:4860:0:0:0:0:8888
        Secondary DNS IPV6 address = 2001:4860:4860:0:0:0:0:8844
Profile 2, Packet Session Status = ACTIVE
        Cellular0/2/1:
        Data Packets Transmitted = 12 ,  Received = 13
        Data Transmitted = 1200 bytes, Received = 1144 bytes
        IP address = 21.21.21.206
        IPV6 address = 2001:567A:567A:1480:5DD6:18D1:BD63:49DA/64  Scope: Global
        Primary DNS address = 171.70.168.183
        Secondary DNS address = 8.8.8.8
        Primary DNS IPV6 address = 2001:4860:4860:0:0:0:0:8888
        Secondary DNS IPV6 address = 2001:4860:4860:0:0:0:0:8844
Profile 3, Packet Session Status = INACTIVE
Profile 4, Packet Session Status = INACTIVE
Profile 5, Packet Session Status = INACTIVE
Profile 6, Packet Session Status = INACTIVE
Profile 7, Packet Session Status = INACTIVE
Profile 8, Packet Session Status = INACTIVE
Profile 9, Packet Session Status = INACTIVE
Profile 10, Packet Session Status = INACTIVE
Profile 11, Packet Session Status = INACTIVE
Profile 12, Packet Session Status = INACTIVE
Profile 13, Packet Session Status = INACTIVE
Profile 14, Packet Session Status = INACTIVE
Profile 15, Packet Session Status = INACTIVE
Profile 16, Packet Session Status = INACTIVE

Network Information
===================
Current System Time = Tue Jan 8 23:24:22 1980
 --More--
*Jun 19 06:13:14.665: %IOSXE_OIR-6-INSSPA: SPA inserted in sCurrent Service Status = Normal
Current Service = Packet switched
Current Roaming Status = Roaming
Network Selection Mode = Automatic
Network = 123 456
Mobile Country Code (MCC) = 123
Mobile Network Code (MNC) = 456
Packet switch domain(PS) state = Attached
LTE Carrier Aggregation state = Deconfigured
Registration state(EMM) = Registered
EMM Sub State = Normal Service
Tracking Area Code (TAC) = 1801
Cell ID = 768001
Network MTU is not Available

Radio Information
=================
Radio power mode = online
LTE Rx Channel Number =  2000
LTE Tx Channel Number =  20000
LTE Band =  4
LTE Bandwidth = 10 MHz
Current RSSI = -71 dBm
Current RSRP = -95 dBm
Current RSRQ = -7 dB
Current SNR = 26.4  dB
Physical Cell Id = 12
Number of nearby cells = 1
Idx      PCI (Physical Cell Id)
--------------------------------
1              12
```

```
Radio Access Technology(RAT) Preference = LTE
Radio Access Technology(RAT) Selected = LTE

Modem Security Information
==========================
Active SIM = 0
SIM switchover attempts = 0
Card Holder Verification (CHV1) = Disabled
SIM Status = OK
SIM User Operation Required = None
Number of CHV1 Retries remaining = 3

Cellular Firmware List
==========================
 Idx Carrier      FwVersion    PriVersion   Status
 1   ATT          02.20.03.00  002.019_000  Inactive
 2   GENERIC      02.20.03.00  002.017_000  Active
 3   SPRINT       02.20.03.22  002.020_000  Inactive
 4   TELSTRA      02.20.03.00  002.018_000  Inactive
 5   VERIZON      02.20.03.22  002.026_000  Inactive

Firmware Activation mode : AUTO

GPS Information
==========================

GPS Info
-------------
GPS Feature: enabled
GPS Mode Configured: not configured
GPS Status: NMEA Disabled

SMS Information
===============
Incoming Message Information
----------------------------
SMS stored in modem = 0
SMS archived since booting up = 0
Total SMS deleted since booting up = 0
Storage records allocated = 25
Storage records used = 0
Number of callbacks triggered by SMS = 0
Number of successful archive since booting up = 0
Number of failed archive since booting up = 0

Outgoing Message Information
----------------------------
Total SMS sent successfully = 0
Total SMS send failure = 0
Number of outgoing SMS pending = 0
Number of successful archive since booting up = 0
Number of failed archive since booting up = 0
Last Outgoing SMS Status = SUCCESS
Copy-to-SIM Status =     0x0
Send-to-Network Status = 0x0
Report-Outgoing-Message-Number:
  Reference Number =     0
  Result Code =          0x0
  Diag Code =            0x0 0x0 0x0 0x0 0x0

SMS Archive URL =

Error Information
=================
```

```
This command is not supported on 4G modems.


Modem Crashdump Information
===========================
Modem crashdump logging: off
```

Successful Call Setup

The following is a sample output when a call is set up. It shows a received IP address from the network. Call setup is successful and data path is open.

```
debug dialer
debug cellular 0/2/0 messages callcontrol
```

Modem Troubleshooting Using Integrated Modem DM Logging

As part of the 3G and 4G serviceability enhancement in Cisco IOS Release 15.2(4)M2 and Cisco IOS Release 15.3(1)T, DM log collection has been integrated into Cisco IOS, eliminating the need for an external PC and simplifying the DM log collection process. The lte modem dm-log command can be used in controller cellular configuration mode to configure integrated DM logging to monitor traffic on the modem. See the Cisco 3G and 4G Serviceability Enhancement User Guide for more information on configuring Integrated DM Logging parameters.

Modem Settings for North America and Carriers Operating on 700 MHz Band

For LTE-EA deployments in North America and for carriers operating in the 700 MHz band, the following changes to the modem settings are required to prevent long network attach times.

The output of show cellular x/x/x all command shows the following:

- Current RSSI is –125 dBM
- LTE Technology Preference = No preference specified (AUTO)

The following sections explain useful commands for changing modem settings:

Changing Modem Settings

To change the modem settings to force the modem to scan different technologies, use the following Cisco IOS command:

```
Router# cellular 0/2/0 lte technology ?
auto  Automatic LTE Technology Selection
  lte   LTE
  umts  UMTS
```

Electronic Serial Number (ESN)

The ESN number is located directly on the modem label in hexadecimal notation. It can also be retrieved using the Cisco IOS CLI using the show cellular *slot/port/module* **hardware** command.

The sample output below shows the ESN number:

```
Hardware Information
====================
Electronic Serial Number (ESN) = 0x603c9854 [09603971156]
Electronic Serial Number (ESN) = <specific ESN in hexadecimal> [specific ESN in decimal]
```

Additional References

Related Documents

Related Topic	Document Title
Hardware Overview and Installation	• *Cisco 4G-LTE Wireless WAN EHWIC* http://www.cisco.com/en/US/docs/routers/access/interfaces/ic/hardware/installation/guide/EHWIC-4G-LTEH • *Cisco Fourth-Generation LTE Network Interface Module Installation Guide* http://www.cisco.com/c/en/us/td/docs/routers/access/interfaces/NIM/hardware/installation/guide/4GLTENIM
Supported Cisco antennas and cables	• *Installing Cisco Interface Cards in Cisco Access Routers* http://www.cisco.com/en/US/docs/routers/access/interfaces/ic/hardware/installation/guide/inst_ic.html • *Cisco 4G/3G Omnidirectional Dipole Antenna (4G-LTE-ANTM-D)* http://www.cisco.com/en/US/docs/routers/access/wireless/hardware/notes/4G3G_ant.html • *Cisco 4G Indoor Ceiling-Mount Omnidirectional Antenna (4G-ANTM-OM-CM)* http://www.cisco.com/en/US/docs/routers/access/wireless/hardware/notes/antcm4gin.html • *Cisco Outdoor Omnidirectional Antenna for 2G/3G/4G Cellular (ANT-4G-OMNI-OUT-N)* http://www.cisco.com/en/US/docs/routers/connectedgrid/antennas/installing/Outdoor_Omni_for_2G_3G_4G • *Cisco Integrated 4G Low-Profile Outdoor Saucer Antenna (ANT-4G-SR-OUT-TNC)* http://www.cisco.com/en/US/docs/routers/connectedgrid/antennas/installing/4G_LowProfile_Outdoor_Sauce • *Cisco Single-Port Antenna Stand for Multiband TNC Male-Terminated Portable Antenna (Cisco 4G-AE* http://www.cisco.com/en/US/docs/routers/access/wireless/hardware/notes/4Gantex15-10r.html • *Cisco 4G Lightning Arrestor (4G-ACC-OUT-LA)* http://www.cisco.com/en/US/docs/routers/access/wireless/hardware/notes/4Glar.html • *Lightning Arrestor for the Cisco 1240 Connected Grid Router* http://www.cisco.com/en/US/docs/routers/connectedgrid/lightning_arrestor/Lightning_Arrestor_for_the_Cisc Cisco 4G Indoor/Outdoor Active GPS Antenna (GPS-ACT-ANTM-SMA)

Related Topic	Document Title
Datasheet	• Modules data sheets for ISR4k http://www.cisco.com/c/en/us/products/routers/4000-series-integrated-services-routers-isr/datasheet-listin • LTE datasheet http://www.cisco.com/en/US/docs/routers/access/wireless/hardware/notes/4Gantex15-10r.html http://www.cisco.com/c/en/us/td/docs/routers/access/4400/roadmap/isr4400roadmap.html

MIBs

MIB	MIBs Link
• IF-MIB • CISCO-ENTITY-VENDORTYPE-OID-MIB • CISCO-WAN-3G-MIB	To locate and download MIBs for selected platforms, Cisco software releases, and feature sets, use Cisco MIB Locator found at the following URL: http://www.cisco.com/go/mibs

RFCs

RFC	Title
RFC 3025	Mobile IP Vendor/Organization-Specific Extensions

Technical Assistance

Description	Link
The Cisco Support and Documentation website provides online resources to download documentation, software, and tools. Use these resources to install and configure the software and to troubleshoot and resolve technical issues with Cisco products and technologies. Access to most tools on the Cisco Support and Documentation website requires a Cisco.com user ID and password.	http://www.cisco.com/cisco/web/support/index.html