Communication module

# GSM-X LTE

EN

Firmware version 2.00

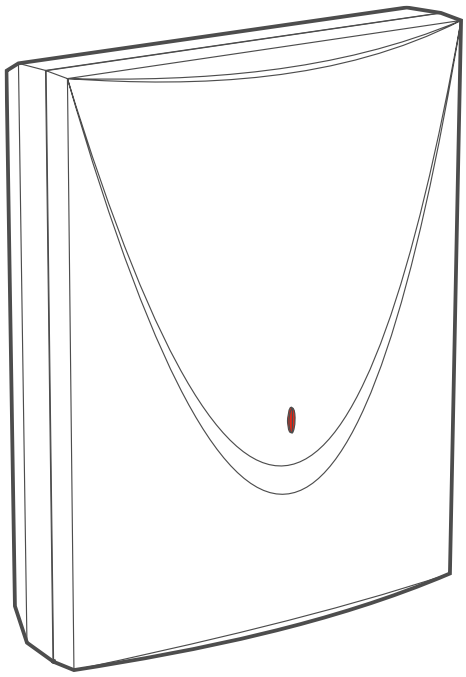

gsm-x_lte_en 07/23

SATEL sp. z o.o. • ul. Budowlanych 66 • 80-298 Gdańsk • POLAND
tel. +48 58 320 94 00
**www.satel.pl**

# IMPORTANT

The module should be installed by qualified personnel.

Prior to installation, please read carefully this manual in order to avoid mistakes that can lead to malfunction or even damage to the equipment.

Disconnect power before making any electrical connections.

Changes, modifications or repairs not authorized by the manufacturer shall void your rights under the warranty.

Connect the module to the **analog telephone line**. Connecting it to a digital network (e.g. ISDN) may cause damage to devices connected to the module.

The nameplate of the device is located on the enclosure base.

CE The device meets the requirements of the applicable EU directives.

The device is designed for indoor installation.

The device must not be disposed of with other municipal waste. It should be disposed of in accordance with the existing rules for environment protection (the device was placed on the market after 13 August 2005).

EAC The device meets the technical regulations of the Eurasian Customs Union.

⎓ Direct current symbol.

FreeRTOS is used in this device (www.freertos.org).

SATEL aims to continually improve the quality of its products, which may result in changes in their technical specifications and software. The current information on the introduced modifications is available on our website.
Please visit us:
https://support.satel.pl

**Hereby, SATEL sp. z o.o. declares that the radio equipment type GSM-X LTE is in compliance with Directive 2014/53/EU. The full text of the EU declaration of conformity is available at the following internet address: www.satel.pl/ce**

The following symbols may be used in this manual:

- note,
- caution.

**Changes made to the electronics version 2.3 and firmware version 2.00**

| | |
|---|---|
| **USB port** | The USB Mini-B socket has been replaced with a USB Micro-B socket. |
| **Cellular communication** | The new module cellular communicator can connect to 2G and 4G network. |

CONTENTS

1. Introduction ....4
2. Features ....4
3. Typical module applications ....7
3.1 Backup communication path ....7
3.2 Supervision / control of devices ....7
3.3 Simulation of monitoring station ....9
3.4 Work in conjunction with INTEGRA / INTEGRA Plus control panels ....9
3.5 Work in conjunction with STAM-2 monitoring station ....11
3.6 Work in conjunction with PBX stations ....11
3.7 Work within Internet of Things (IoT) ....11
4. Description of the module ....12
4.1 Electronics board ....12
4.1.1 LED indicator ....13
5. Installation ....14
5.1 Preparing the cabling ....14
5.2 Installation of enclosure ....14
5.2.1 Elements inside the enclosure ....15
5.3 Installation of antenna ....16
5.4 Connecting the analog telephone line ....16
5.5 Connecting the devices to the inputs and outputs ....17
5.6 Connecting the RS-232 port ....17
5.7 Connecting the power supply and starting the module ....18
5.8 Connecting the computer to the module ....18
5.9 Installing the SIM cards ....18
6. GSM-X-ETH Ethernet module ....19
6.1 Electronic boards ....19
6.2 GSM-X-ETH module installation ....19
7. GSM-X-PSTN telephone module ....20
7.1 Electronics board ....20
7.2 GSM-X-PSTN module installation ....21
8. Programming ....22
8.1 Description of the GX Soft program ....22
8.1.1 Startup window ....23
8.1.2 Menu bar in the GX Soft program ....24
8.1.3 Side menu ....25
8.1.4 Status panel ....25
8.1.5 Additional menu ....26
8.2 Establishing connection between the program and the module ....29
8.2.1 Local connection ....29
8.2.2 Remote connection: SATEL server ....29
8.2.3 Remote connection: Module > GX Soft ....30
8.3 Project ....30
8.4 Hardware ....32
8.4.1 Mainboard ....32
8.4.2 GSM ....34
8.4.3 GSM-X-ETH/PSTN ....36
8.5 Inputs ....37
8.5.1 Status ....37
8.5.2 Settings ....38
8.5.3 Bypasses ....38
8.6 Outputs ....38
8.6.1 Control ....38
8.6.2 Settings ....38
8.6.3 Triggering ....40
8.7 Communication ....40
8.7.1 SATEL server ....40
8.7.2 Direct connection to GX Soft ....41

8.8 GSM gateway ... 42
8.8.1 PAGER to SMS conversion ... 44
8.8.2 PSTN to GSM prefix ... 45
8.8.3 Telephone numbers ... 45
8.9 Station simulation ... 45
8.10 Reporting ... 47
8.11 Messaging ... 51
8.12 Event converter ... 55
8.13 SMS/DTMF control ... 56
8.14 CLIP control ... 58
8.15 Data forwarding ... 59
8.16 Remote update ... 61
8.17 IoT ... 62
8.18 Users ... 65
8.19 Events ... 65
9. GX Control application ... 66
10. Control by using a telephone ... 69
10.1 Control from the telephone connected to output telephone line ... 69
10.2 Control from other telephones ... 69
10.2.1 From the keypad ... 69
10.2.2 Using SMS ... 70
10.2.3 Using CLIP ... 71
11. Reporting events when the module is used with INTEGRA / INTEGRA Plus ... 71
12. Converting the PAGER type messages into SMS messages ... 71
12.1 Working in conjunction with the DT-1 dialer ... 72
13. Sending SMS messages from the telephone connected to telephone line output ... 72
14. The rules for converting the numbers ... 73
15. Module firmware update ... 73
15.1 Local update ... 74
15.2 Remote update ... 74
15.2.1 Initiating the update by using SMS message ... 74
16. Restoring the factory settings ... 74
17. Specifications ... 74
18. Appendix ... 75
18.1 Data format for JSON and MQTT protocol ... 75
18.1.1 Format of the frame sent by the module ... 75
18.1.2 Format of the module control frame ... 76
18.1.3 Format of the event log reading frame ... 76
19. Manual update history ... 77

# 1. Introduction

This manual describes the GSM-X LTE module (electronics version 2.3) and how it should be installed as well as configured using the GX Soft program. Described herein are also the optional components of the GSM-X LTE module: the GSM-X-ETH Ethernet module and the GSM-X-PSTN telephone module.

# 2. Features

### Communication

- Built-in cellular communicator operating in the 2G and 4G networks.
- Dual SIM support (nano-SIM).
- Possibility to remotely check the account balance and validity of the SIM card installed in the module.
- Possibility to define the MCC / MNC code of the operator of network into which the module is to log in.
- Possibility to expand GSM-X LTE with the GSM-X-ETH module to add Ethernet link.
- Possibility to expand GSM-X LTE with the GSM-X-PSTN module to add additional transmission path for the purpose of reporting (AUDIO reporting via analog telephone line) and messaging (voice messages).

### GSM gateway

- Simulation of analog telephone line by using cellular connection:
  - Tone dialing (DTMF).
  - Information on the caller number (CLIP FSK or DTMF).
  - Changing voltage polarity on the telephone line output when making phone connections (individual connection billing option).
- Possibility to generate routing signal.
- Possibility to work as a backup communication path for analog telephone line.
- Filtering capability for connections made via module cellular phone.
- Possibility to send SMS messages from telephone connected to the telephone line output.

### Reporting

- Reporting events to two monitoring stations.
- Several communication formats:
  - SIA,
  - Contact ID (CID),
  - Ademco Express,
  - Sil. Knight / Ademco slow,
  - Radionics 1400Hz,
  - Radionics 1400 with parity.
- Multiple transmission paths:
  - GPRS / LTE,
  - GSM voice channel,
  - SMS messages,

  - Ethernet network (using GSM-X-ETH module).
  - PSTN telephone network (using GSM-X-PSTN module).
- Defining priority for different paths of event reporting.
- Dual Path Reporting compliant with EN 50136 (requires GSM-X-ETH or GSM-X-PSTN module to be connected).
- Converting and retransmitting codes of events received from other devices (simulation of telephone monitoring station).

### Messaging

- Notification of events related to the module and received from other devices.
- 8 telephone numbers to be notified.
- Notification by using:
  - voice messages (cellular network or PSTN network [GSM-X-PSTN module must be connected]),
  - SMS messages,
  - push messages (provided that GX Control application is installed on the user phone),
  - CLIP (toll-free).
- Programming voice messages from the GX Soft program.
- Capability of converting the PAGER type text messages into SMS messages.

### Event log

- Capability of storing up to 500 events generated by the module or received from the control panel.

### Inputs

- 8 programmable inputs (NO, NC).
- Supervising the status of external devices.
- Capability of input bypassing.

### Outputs

- 4 programmable OC type outputs.
- Controlling external devices or signaling troubles.

### Control

- Control of outputs or bypassing of the module inputs by means of:
  - inputs,
  - telephone keypad (DTMF),
  - SMS messages,
  - GX Soft program,
  - GX Control application,
  - CLIP (only outputs control).
- Capability of determining the telephone numbers authorized for DTMF, SMS or CLIP control.

### Work in conjunction with INTEGRA / INTEGRA Plus control panels

- Cellular network as the primary or backup communication path.

- Transmitting event codes to the monitoring station via cellular network or Ethernet / PSTN (optionally, after installation of the GSM-X-ETH / GSM-X-PSTN module).
- Messaging via cellular network.
- Messaging via PSTN network (optionally, if GSM-X-PSTN module is installed).
- Remote programming of the control panels from a computer with DLOADX program installed (data transfer via cellular network).
- Remote administration of the alarm system by using a computer with GUARDX program installed (data transfer via cellular network).

### Work in conjunction with STAM-2 monitoring station

- SMS or CLIP receiving capability for monitoring station.
- SMS sending capability for monitoring station.

### Work within the Internet of Things (IoT)

- Possibility of integrating the module with automation systems, measuring data acquisition systems, etc. (GPRS channel).

### Operation from mobile devices

- Free GX Control application for remote operation of the module.
- Functions available from the application:
  - checking the status of inputs and outputs,
  - bypassing / unbypassing inputs,
  - output control,
  - viewing troubles,
  - viewing event log.
- Simple and easy establishing remote communication between GX Control application and the module thanks to SATEL's connection setup service.

### Programming

- Free GX Soft program for local (USB port) and remote (data transfer via cellular network or Ethernet) programming of the module.
- Simple and easy establishing remote communication between GX Soft program and the module thanks to SATEL's connection setup service.
- Possibility to configure the module settings by using SMS messages.

### Firmware update

- Local firmware update by using a computer connected to USB Micro-B port.
- Remote update of the module firmware by using the “UpServ” server via cellular network or Ethernet (the latter optionally, if GSM-X-ETH module is installed).

### LEDs

- LEDs indicating the module status.

### Power supply

- Powering with 12...24 VDC (-10% / +25%).
- Connector for SATEL's dedicated power supply.

# 3. Typical module applications

The extended functionality of GSM-X LTE module enables it to be used for a variety of applications. This section presents typical examples of its application. Some of them are capable of being combined with one other.

## 3.1 Backup communication path

When connected to the telephone line output (T-1 and R-1 terminals), the devices are capable of making telephone calls via analog telephone line or cellular network. You can select which communication path will be the primary one. If the primary communication path is malfunctioning, the module can automatically switch over to the backup one.

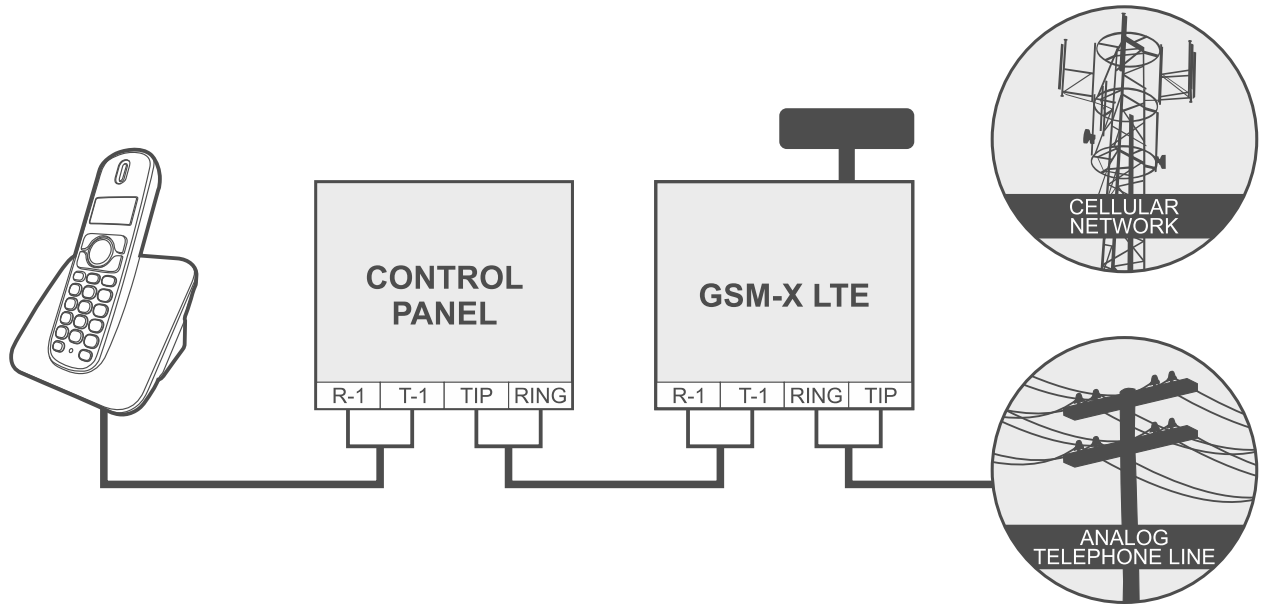


Fig. 1. The module working as a backup communication path.

## 3.2 Supervision / control of devices

The change of status of the input to which the supervised device is connected may result in:

- sending event code to the monitoring station (reporting GPRS/LTE, SMS or optionally via Ethernet network [if GSM-X-ETH module is installed – Fig. 2] or PSTN network [if GSM-X-PSTN module is installed – Fig. 3]),
- notification (messaging) about the event by means of voice message (cellular network or PSTN network [if GSM-X-PSTN module is installed – Fig. 3]), SMS, push or CLIP.

The inputs can be bypassed locally (by means of one of the module inputs, the keypad of telephone connected to the telephone line output or the GX Soft program) or remotely (by means of SMS messages, telephone keypad (DTMF), the GX Soft program or the GX Control application).

The devices connected to the module outputs can be controlled locally (by means of module inputs, the keypad of telephone connected to the telephone line output or the GX Soft program) or remotely (by means of SMS messages, telephone keypad (DTMF), CLIP, the GX Soft program or the GX Control application).

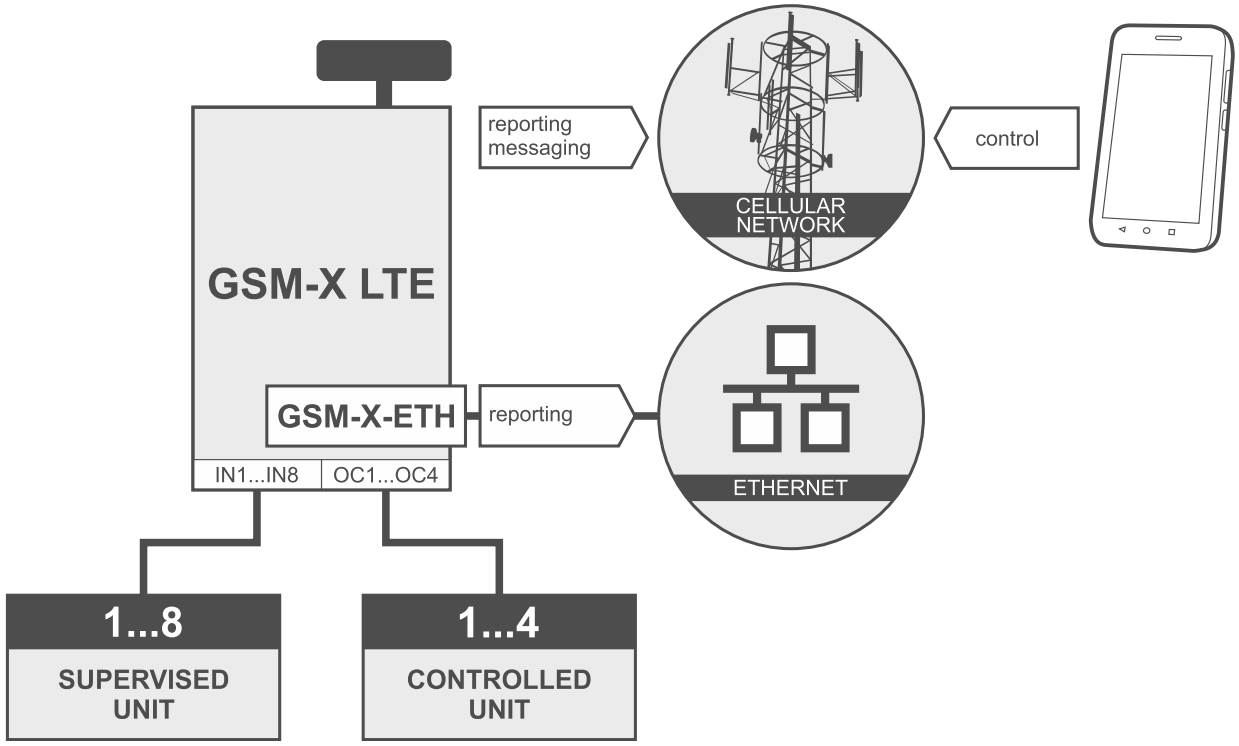


Fig. 2. Module supervising operation of the devices connected to inputs and controlling operation of the devices connected to outputs (GSM-X-ETH module is installed).

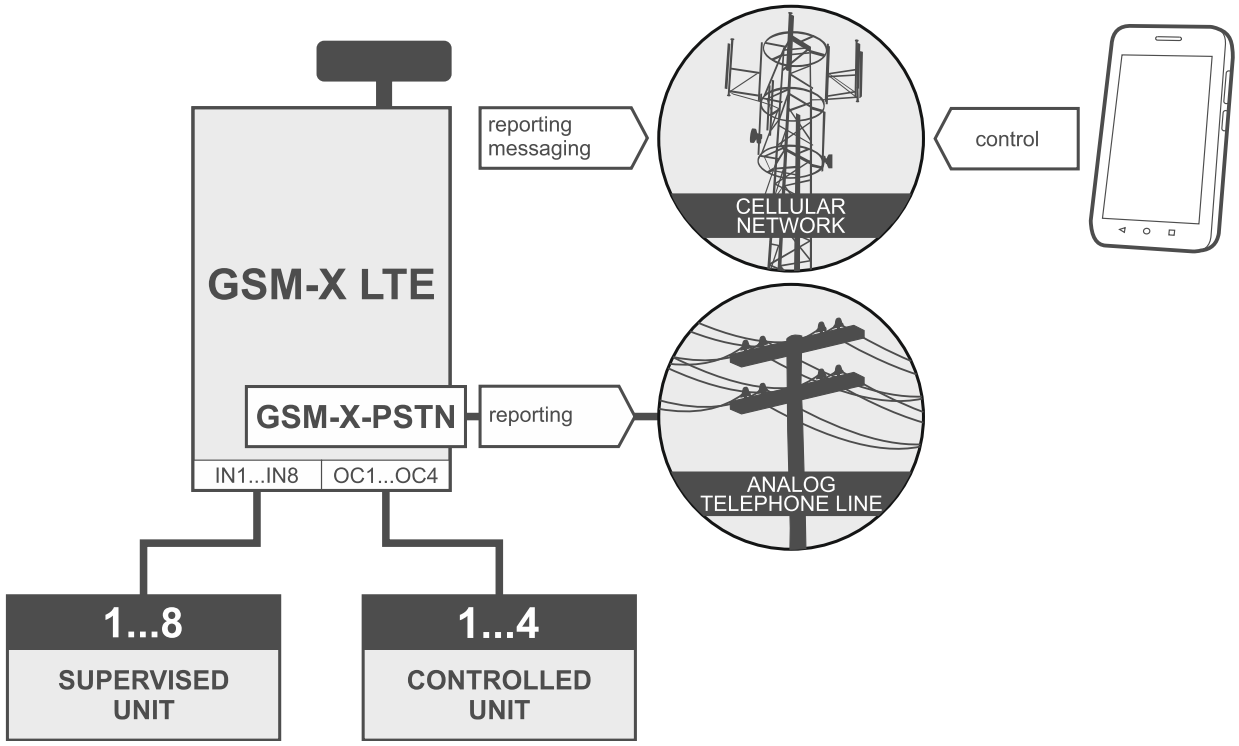


Fig. 3. Module supervising operation of the devices connected to inputs and controlling operation of the devices connected to outputs (GSM-X-PSTN module is installed).

## 3.3 Simulation of monitoring station

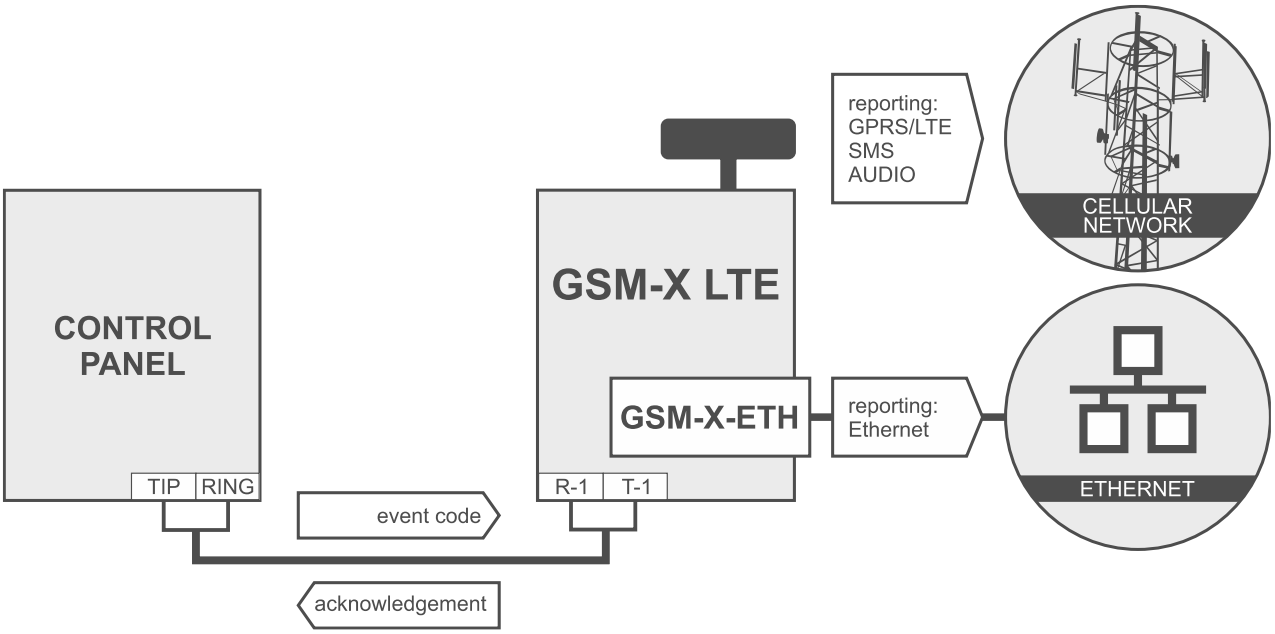


Fig. 4. Module simulating the monitoring station (GSM-X-ETH module is installed).

The module can forward the event codes received from the control panel to the monitoring station by means of cellular or, optionally, Ethernet network (if GSM-X-ETH module is installed – Fig. 4) / PSTN network (if GSM-X-PSTN module is installed – Fig. 5). Which reporting path will be used to send the event code depends on the module settings.

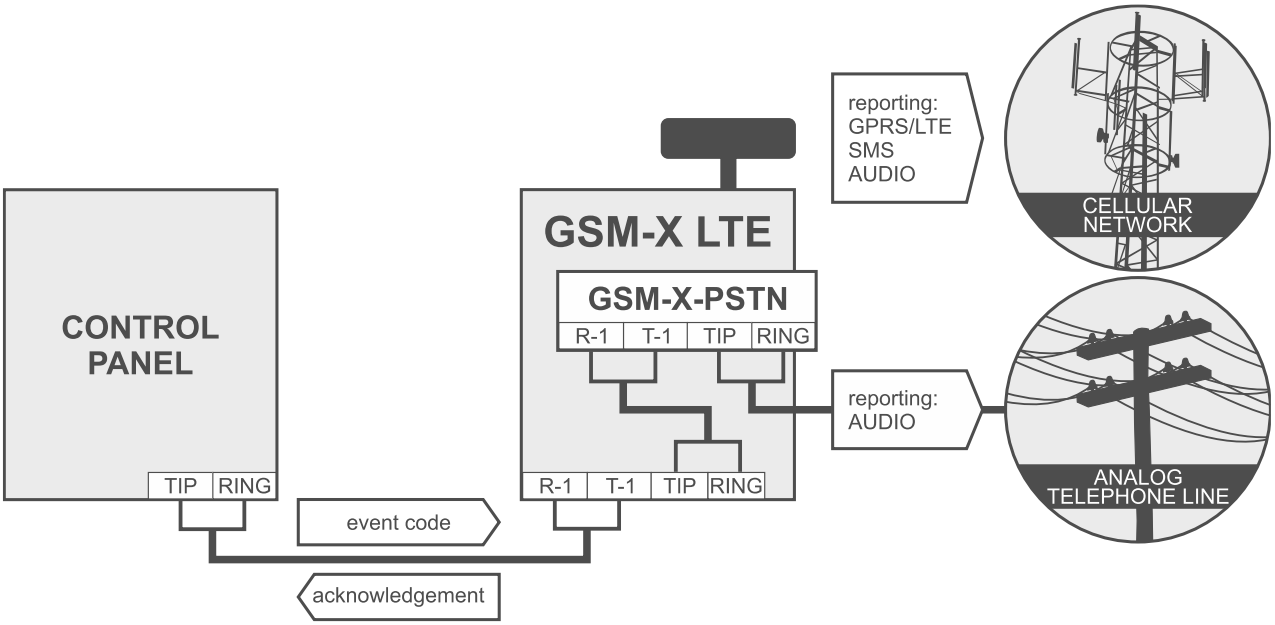


Fig. 5. Module simulating the monitoring station (GSM-X-PSTN module is installed).

## 3.4 Work in conjunction with INTEGRA / INTEGRA Plus control panels

When connected to the INTEGRA / INTEGRA Plus control panel, the module offers the following benefits:

- cellular network as the primary or backup communication path,

- transmission of event codes to the monitoring station via cellular or, optionally, Ethernet network (if GSM-X-ETH module is installed – Fig. 6) / PSTN network (if GSM-X-PSTN module is installed – Fig. 7),
- messaging via cellular network, including SMS messaging (for the INTEGRA Plus control panels, an additional feature is available: messaging by means of SMS messages, whose content corresponds to the description in event log and thus the installer does not need to define it),
- voice messaging via PSTN network (if GSM-X-PSTN module is installed – Fig. 7),
- remote programming of the control panel from a computer with DLOADX program installed (data transfer via cellular network),
- remote management of the alarm system from a computer with GUARDX program installed (data transfer via cellular network).

*If communication with the GSM-X LTE module is to be effected through the RS-232 port, the local programming function in the INTEGRA / INTEGRA Plus control panel must be disabled.*

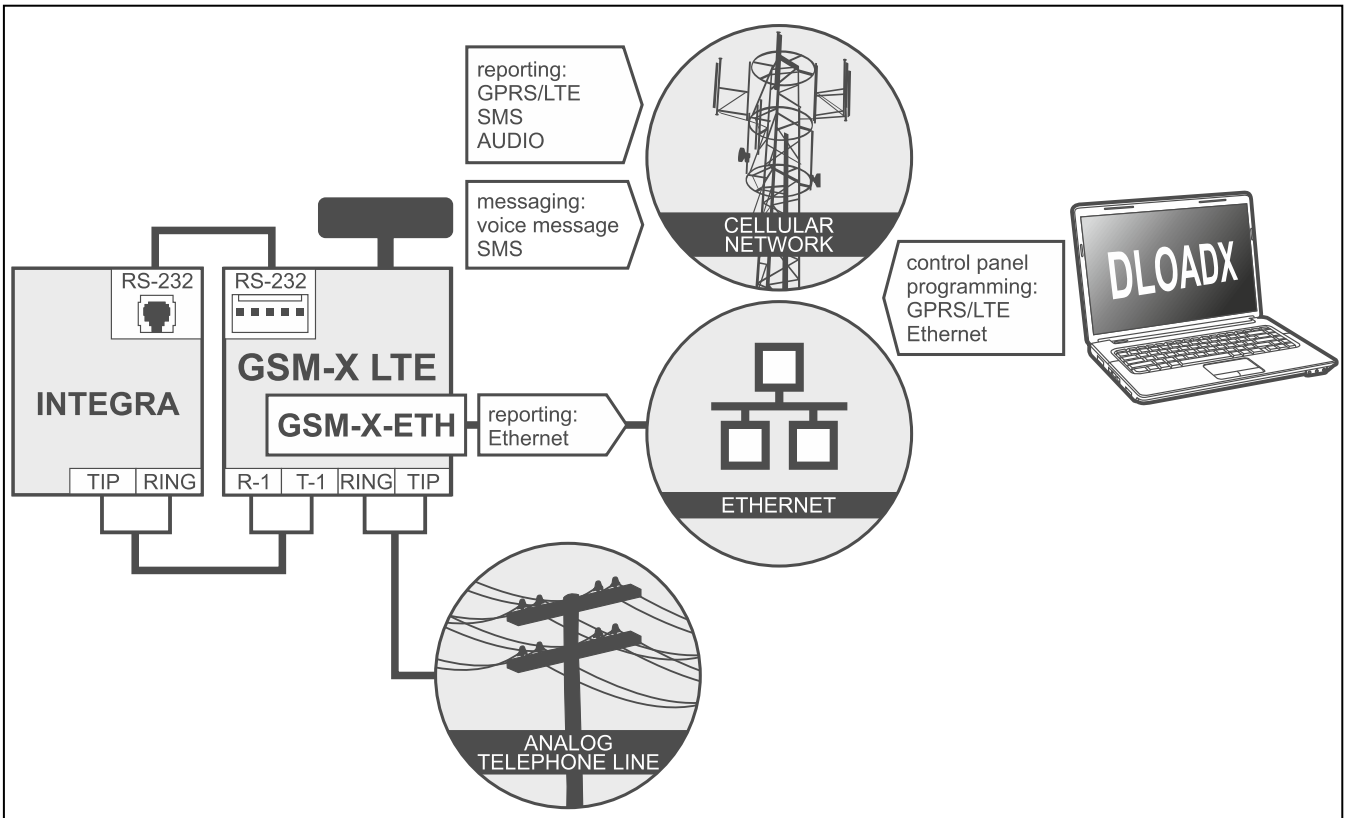


Fig. 6. Module working in conjunction with the INTEGRA / INTEGRA Plus control panel (GSM-X-ETH module is installed).

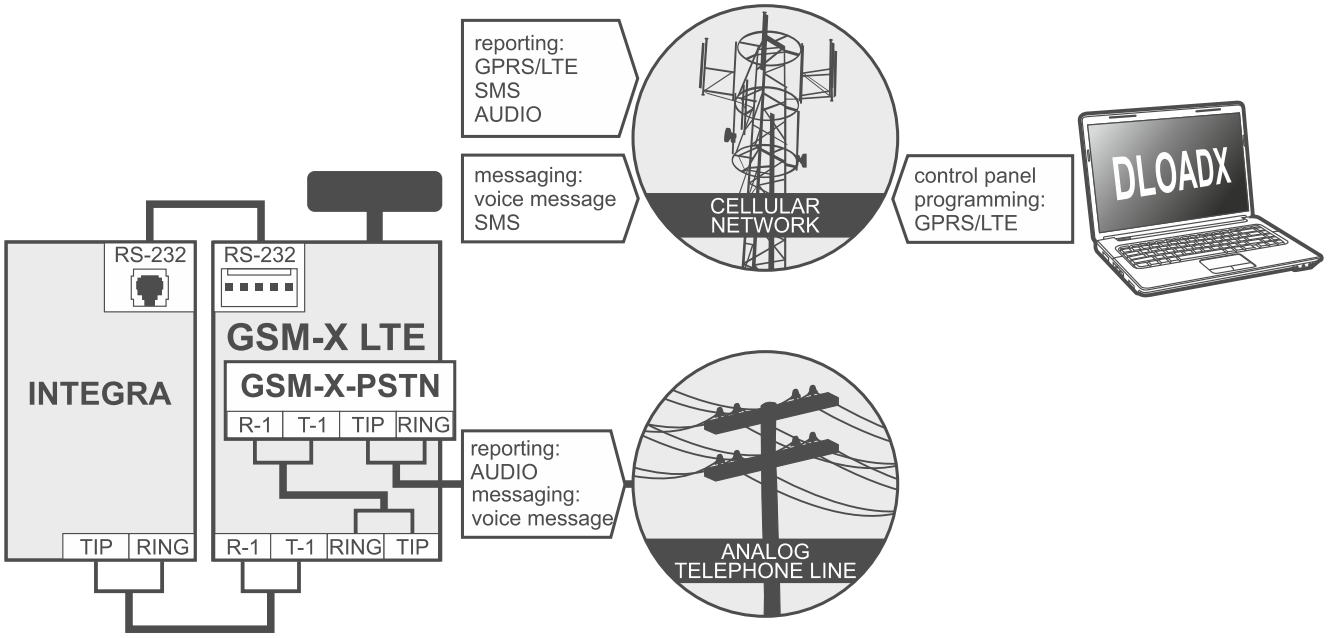


Fig. 7. Module working in conjunction with the INTEGRA / INTEGRA Plus control panel (GSM-X-PSTN module is installed).

## 3.5 Work in conjunction with STAM-2 monitoring station

When connected to the STAM-2 monitoring station, the module makes it possible to receive event codes sent in the form of SMS or CLIP. The module also enables the monitoring station to send SMS messages.

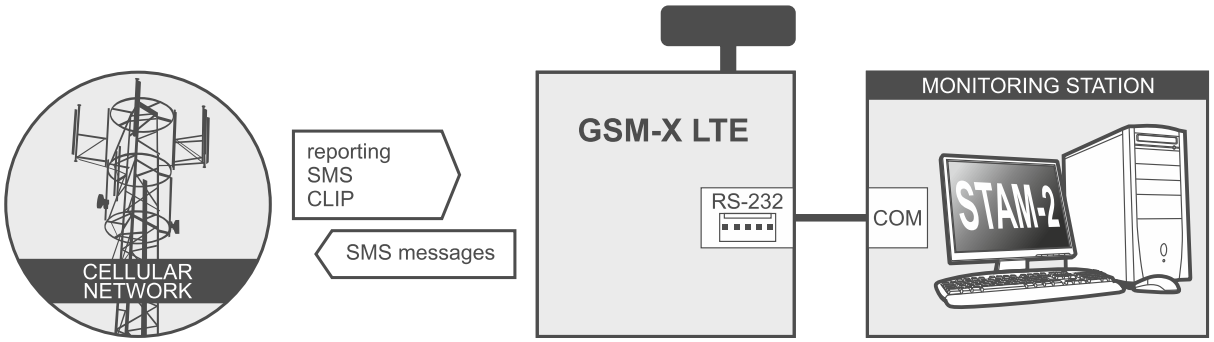


Fig. 8. Module working in conjunction with the STAM-2 monitoring station.

## 3.6 Work in conjunction with PBX stations

The module can work in conjunction with the Private Branch Exchanges (PBX) as an additional external telephone line. It can be used to make outgoing calls to the mobile phone numbers and thus decrease the costs incurred.

## 3.7 Work within Internet of Things (IoT)

Using cellular network (TCP), the module can communicate with devices in the Internet of Things (IoT). This allows the module to be integrated e.g. with automation systems and measurement data acquisition systems. The module can send information about the status of inputs / outputs to the IoT devices. In response, the module can receive commands to bypass / unbypass the inputs as well as to activate / deactivate the outputs of the module.

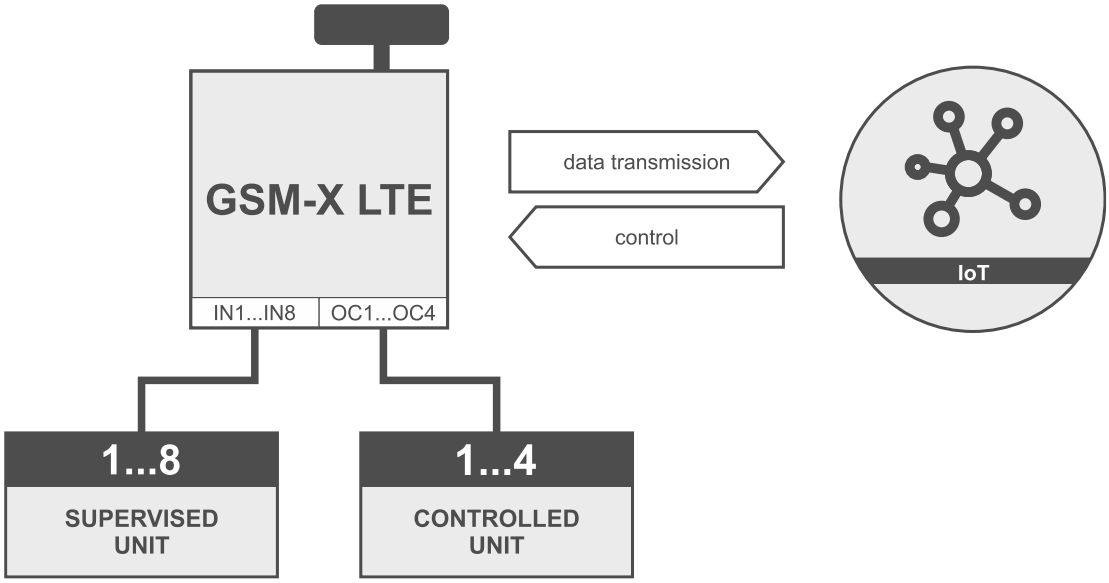


Fig. 9. Module working within Internet of Things (IoT).

# 4. Description of the module

## 4.1 Electronics board

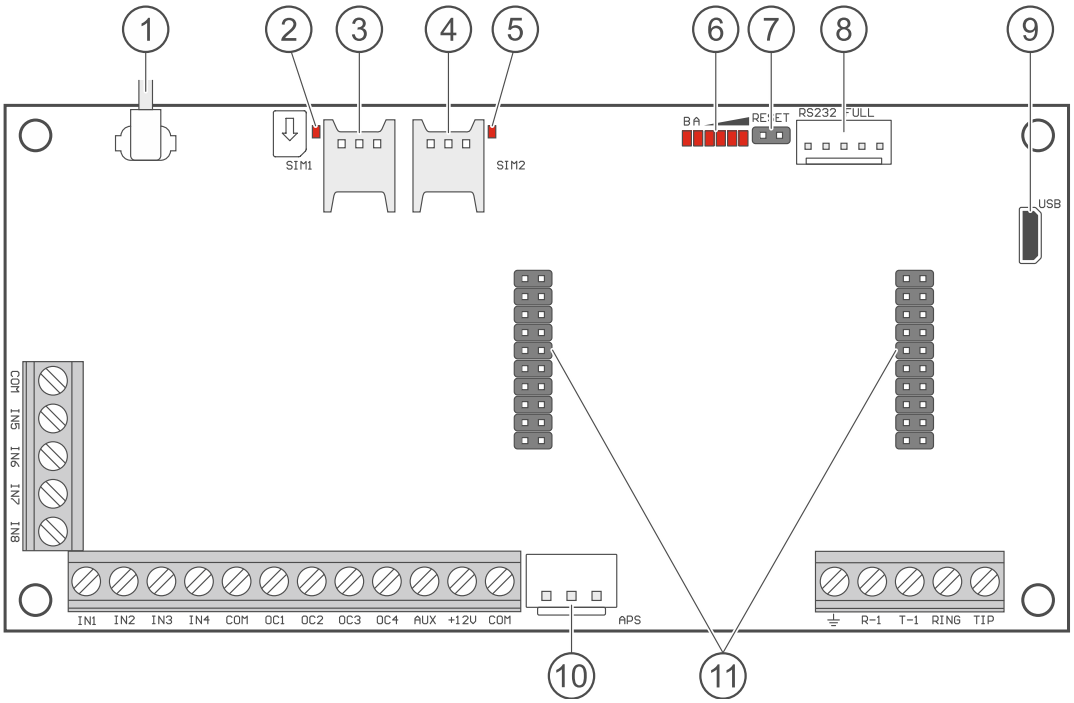


Fig. 10. GSM-X LTE module electronics board.

1. antenna cable (the antenna is delivered with the module).
2. SIM1 LED. The LED is on, when the card installed in the SIM 1 slot is active.
3. slot in which the first SIM card is to be installed.
4. slot in which the second SIM card is to be installed.

*Inserting the SIM card into its slot before programming the card PIN code in the module is not recommended (if the card requires entering the PIN code).*

5 SIM2 LED. The LED is on, when the card installed in the SIM 2 slot is active.

6 LEDs indicating the module status (see “LED indicator”).

7 RESET pins for emergency update of the module firmware. Shorting the pins enters the module starter mode in which the module is waiting for the firmware update (see “Module firmware update” p. 73).

8 RS-232 port.

9 USB socket (Micro-B).

10 APS connector for a SATEL power supply (e.g. APS-412).

11 connectors for the GSM-X-ETH module (see “GSM-X-ETH module installation” p. 19) or the GSM-X-PSTN module (see “GSM-X-PSTN module installation” p. 21).

**Description of terminals**

**IN1…IN8** – inputs.

**COM** – common ground.

**OC1...OC4** – programmable OC type outputs (disconnected from common ground / shorted to common ground).

**AUX** – 12…24 VDC power output.

**+12V** – power input (12...24 VDC -10% / +25%).

⏚ – protective terminal of telephone communicator (to be connected only to the PE protective earth circuit of 230 VAC mains).

**R-1, T-1** – analog telephone line output (for connecting a telephone or a device fitted with telephone communicator, e.g. control panel).

*When making a telephone call, the module changes the DC voltage polarity on telephone line output (T-1 and R-1 terminals), thus enabling individual charging of the phone calls.*

**RING, TIP** – analog telephone line input (for connecting the incoming telephone line [from telephone provider] or the GSM-X-PSTN module).

### 4.1.1 LED indicator

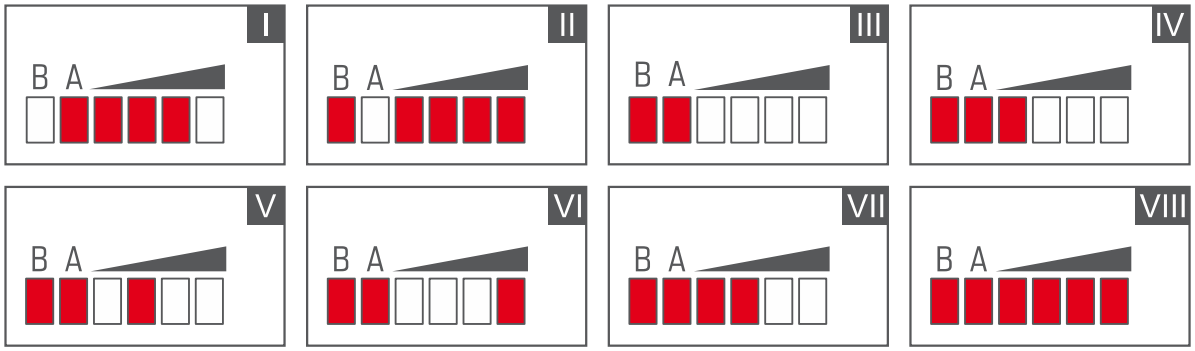


Fig. 11. Examples of LED indicated statuses.

**I** (LED A is flashing, the other LEDs are ON) – data transmission is going on; signal level: 3.

**II** (LED B is flashing, the other LEDs are ON) – SMS message is being sent, module is calling (AUDIO connection or CLIP message); signal level: 4.

**III** (LEDs are flashing) – logging into cellular network.

**IV** (LEDs are flashing) – logging into cellular network has failed; missing SIM card.

**V** (LEDs are flashing) – logging into cellular network has failed; incorrect PIN code.

**VI** (LEDs are flashing) – logging into cellular network has failed; SIM card has been blocked after three attempts to use an invalid PIN code (PUK code must be used to unblock the SIM card).

**VII** (LEDs are flashing) – cellular communicator is disabled (see “SIM 1 / SIM 2” option p. 34).

**VIII** (LEDs are flashing) – module waiting for configuration settings to be loaded.

# 5. Installation

**Disconnect power before making any electrical connections.**

**It is not advisable to power up the module if the antenna is not connected.**

**The installation to which the module is to be connected should be provided with:**

- **2-pole disconnector,**
- **short-circuit protection with a 16 A time delay circuit breaker.**

The GSM-X LTE module should be installed indoors, in spaces with normal air humidity. When selecting the mounting location, remember that thick masonry walls, metal partitions, etc. will reduce the range of radio signal. It is not advisable to install the module in close vicinity to electrical installations, because this can result in malfunctioning of the device.

## 5.1 Preparing the cabling

Run the cables to be used for connecting the module with other devices to the module installation place. Do not lay the cables in immediate vicinity of the low-voltage electrical network wires, especially those used for powering the high-power equipment (such as electric motors).

It is recommended that unshielded non-twisted cable to be used.

## 5.2 Installation of enclosure

The GSM-X LTE module is sold complete with the OPU-2B enclosure.

*The module can also be installed in SATEL’s OPU-4 P enclosure. It is recommended that you use this enclosure, if you are planning to install the GSM-X-ETH Ethernet module / the GSM-X-PSTN telephone module on the electronics board or the module is to be powered from a power supply connected to the APS connector (e.g. APS-412). If the module is installed in the OPU-4 P enclosure, skip the description below and follow instructions contained in the enclosure manual.*

1. Loosen the screws locking the enclosure cover and remove the cover (Fig. 12).
2. Put the enclosure against the wall and mark the position of mounting holes.
3. Drill holes for wall plugs (screw anchors) in the wall.
4. Make an opening or openings in the enclosure base for lead-in cables.
5. Run the cables into the enclosure.
6. Using wall plugs (screw anchors) and screws, fasten the enclosure base to the wall. Select wall plugs and screws specifically intended for the mounting surface (different for concrete or brick wall, different for plaster wall, etc.).

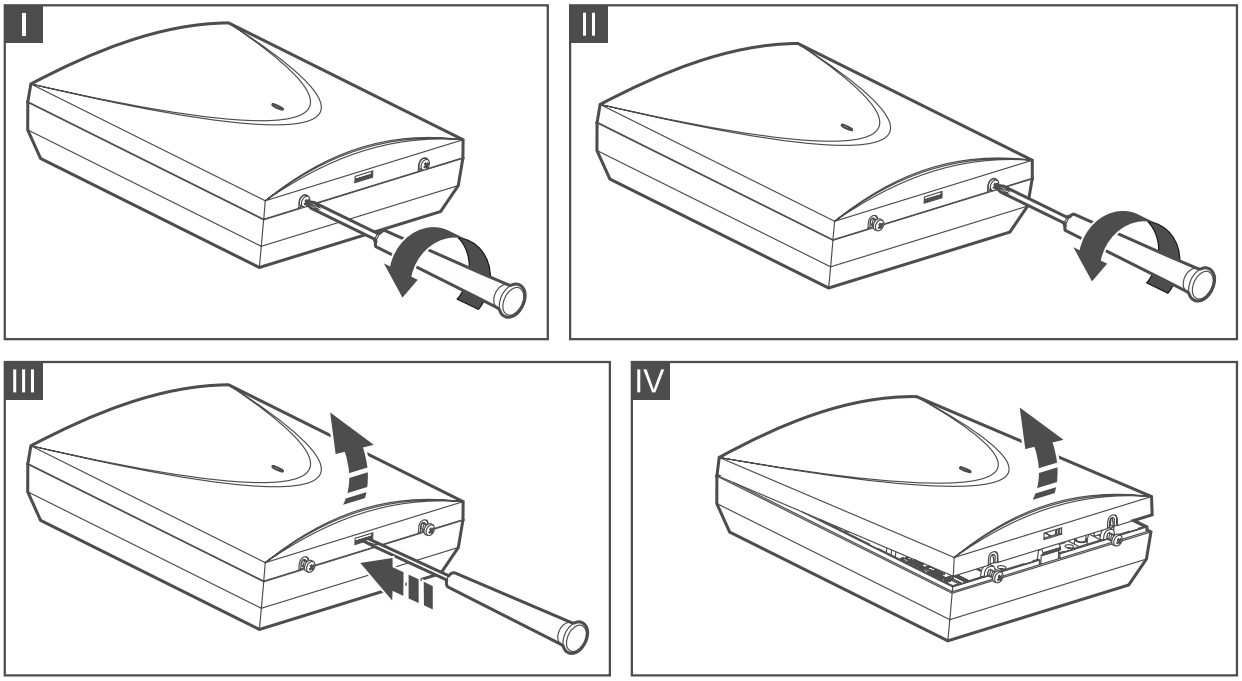


Fig. 12. Opening the OPU-2B enclosure.

### 5.2.1 Elements inside the enclosure

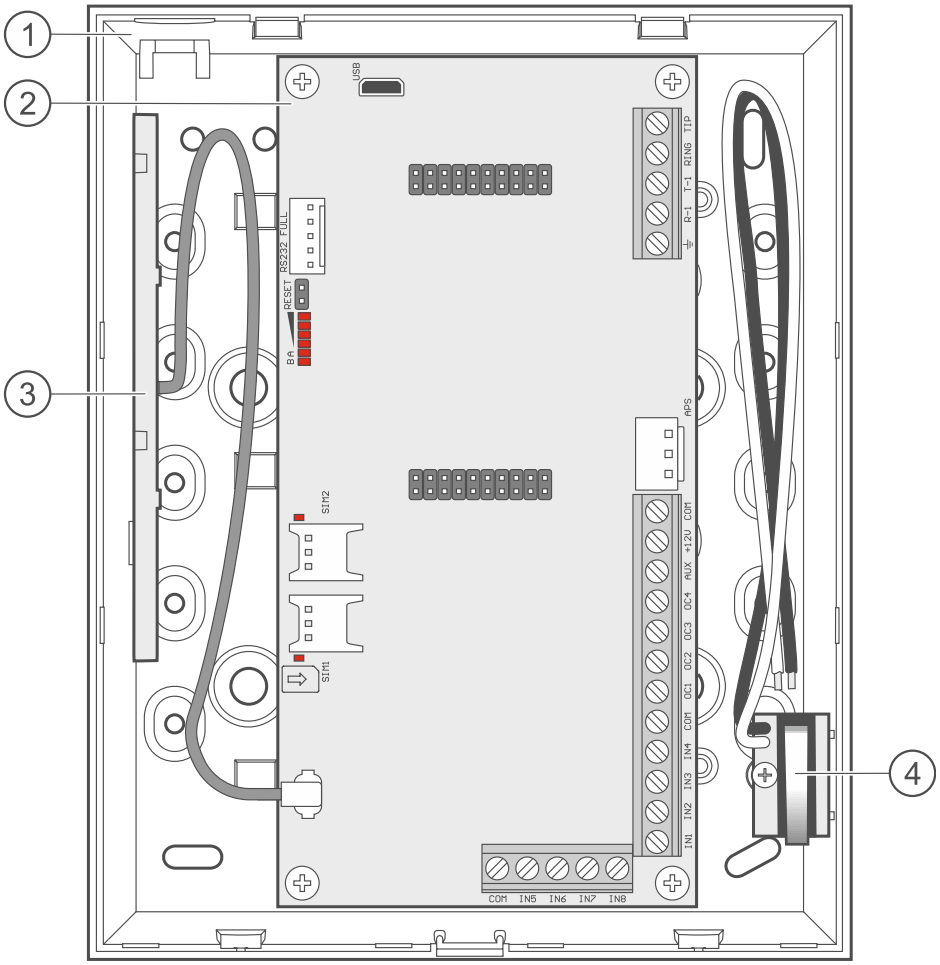


Fig. 13. GSM-X LTE module in OPU-2B enclosure.

1. enclosure base.
2. electronics board.
3. antenna.
4. tamper switch that can be connected to one of the module inputs.

## 5.3 Installation of antenna

The GSM-X LTE module is delivered with an antenna installed inside the enclosure. The antenna can be replaced with an external antenna mounted on the enclosure or at some distance from it. If this is the case, you will need the IPX-SMA adapter.

Using the antenna mounted at some distance from the enclosure is recommended wherever thick masonry walls, metal partitions etc. may decrease the range of radio signal at the module installation place.

The antenna must not be installed in parallel to low-voltage electrical wires, or it can affect performance of the antenna.

## 5.4 Connecting the analog telephone line

**The module works only with the analog telephone line.**

**Do not connect any other telephone device between the module and the incoming telephone line.**

**Let the user know how the module is connected to the telephone network.**

Connect the incoming telephone line to terminals TIP and RING (Fig. 14). Any telephone devices located in the premises (phone, fax, etc.) can be connected to terminals T-1 and R-1.

If the ADSL service is used on the premises where the module is installed, the module should be connected after the ADSL filter, and the other devices using the analog telephone line should be connected to the module (Fig. 15).

To protect the telephone communicator against over-voltage, connect the ⏚ terminal to the protective earth conductor (PE) of the 230 VAC mains. To make the connection, use a wire with ≥0,75 mm$^2$ cross-section. Never connect the ⏚ terminal to the neutral conductor (N).

Additionally, if the GSM-X-PSTN module is to be installed, see „GSM-X-PSTN module installation” p. 21.

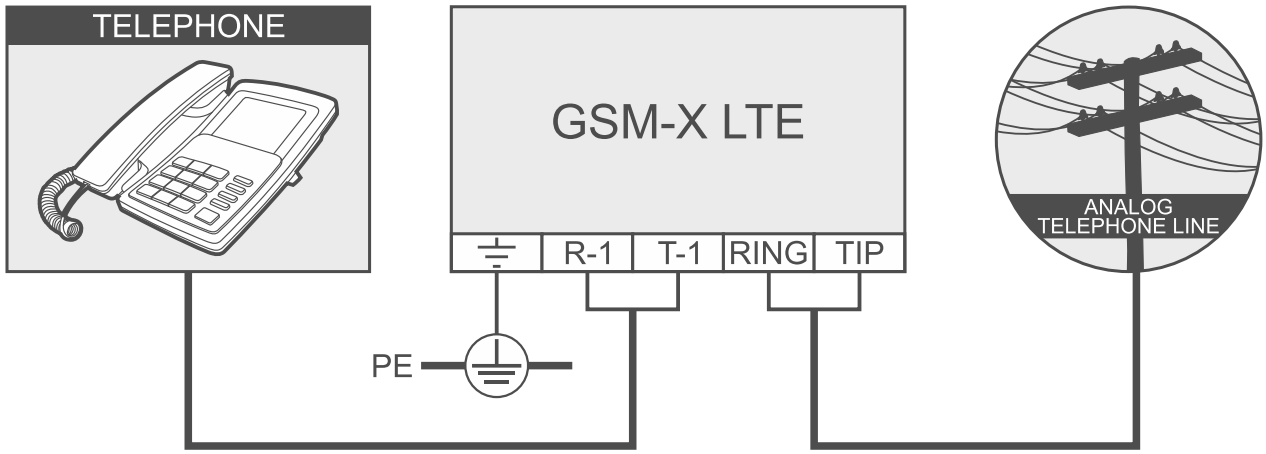


Fig. 14. An example of module connection to analog telephone line (telephone connected to the module).

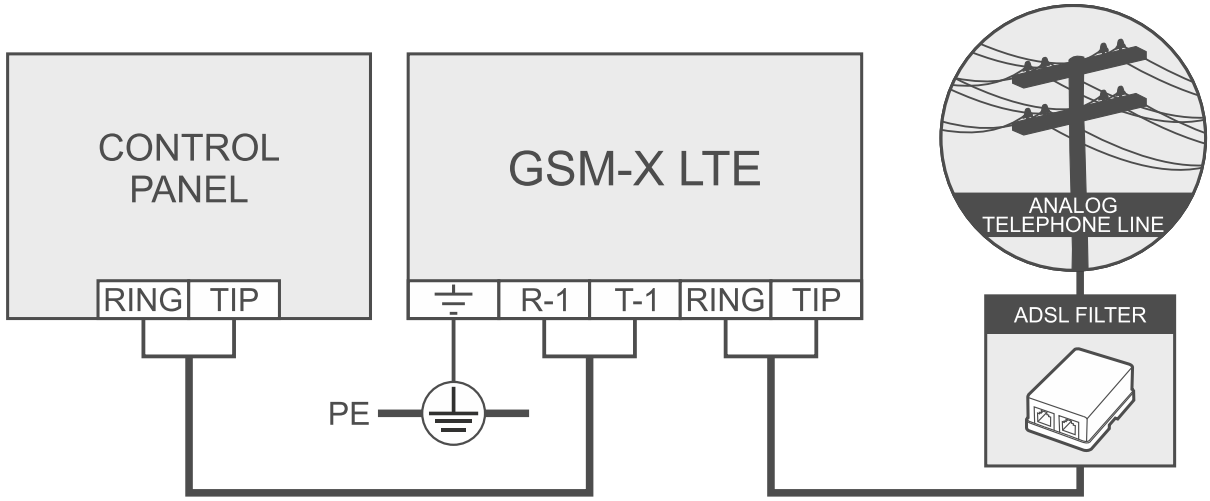


Fig. 15. An example of module connection to ADSL filter (control panel connected to the module).

## 5.5 Connecting the devices to the inputs and outputs

1. Connect the devices whose operation is to be monitored by the module to the input terminals.
2. Connect the devices which are to be controlled by the module to the terminals of OC type outputs.

*The sum of currents drawn by devices powered from the AUX output must not exceed 300 mA.*

## 5.6 Connecting the RS-232 port

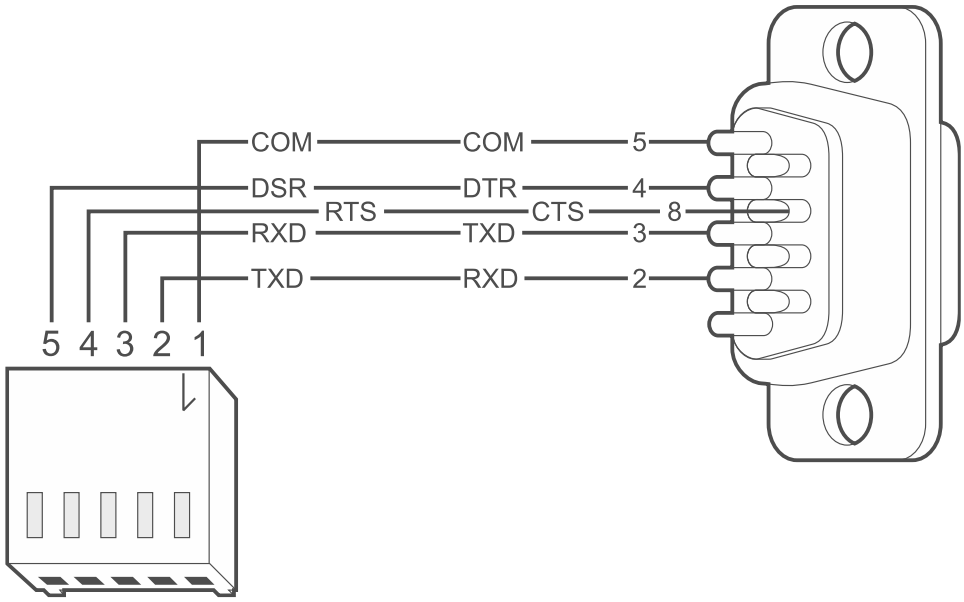


Fig. 16. Connecting the RS-232 ports on module and computer. Shown on the left is PIN-5 plug. Shown on the right is DB-9 female connector (solder side view).

If the module is to work in conjunction with the INTEGRA / INTEGRA Plus control panel, connect together the RS-232 ports on module and control panel. To connect the module PIN5 connector to the control panel RJ connector, use the RJ/PIN5 cable offered by SATEL.

If the module is to work in conjunction with the STAM-2 monitoring station, connect the module RS-232 port to the port of computer on which the cards are installed. If the computer has a RS-232 port, make a connection according to Fig. 16. If the computer has a USB port, use the USB-RS converter available from SATEL.

## 5.7 Connecting the power supply and starting the module

The module may be powered from the control panel, from an expander with power supply, or from a power supply. SATEL offers power supplies (e.g. APS-412), which can be connected to the APS connector on the electronics board.

*When the power voltage drops below 9.8 V, restart of the module occurs.*

*The required output current of power supply is at least 1 A (provided that no device is powered from the module AUX output).*

1. Depending on the selected method of module powering, connect the power supply to the APS connector or connect the power leads to the +12V and COM terminals (use flexible wires with a cross-section of 0.5-0.75 $mm^2$).

**Never connect power supply to APS connector and terminals at the same time.**

2. Power up the module. The module will start up.

## 5.8 Connecting the computer to the module

Connect the computer to the module USB port. After connecting the computer, you can:

- configure the module by using the GX Soft program. You can download the GX Soft program from the www.satel.pl website. For more information, please refer to section “Programming” (p. 22).
- update the module firmware.

## 5.9 Installing the SIM cards

You can install up to two nano-SIM cards in the module.

1. If PIN code(s) is / are required by the SIM card(s), use the GX Soft program to program the code(s) (see p. 34).
2. Power down the module.
3. Insert the SIM card / cards into the socket / sockets (Fig. 17).

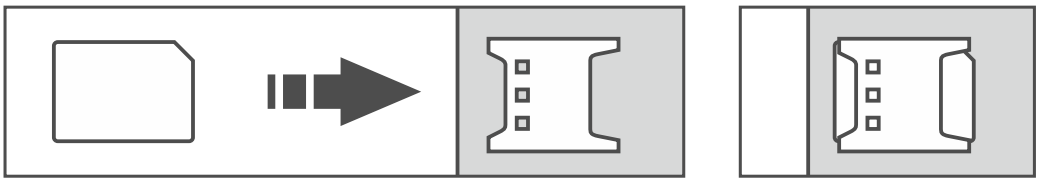

Fig. 17. Installing the nano-SIM card.

4. Power up the module. Logging the communicator into the cellular network may take a few minutes.

*If the module is to send data via the cellular network, it is recommended that you use SIM cards with a dedicated tariff plan for M2M (machine-to-machine) communication.*

*If the programmed PIN code is invalid, the module will report a trouble. Programming a correct PIN code will clear the trouble.*

*Restarting the module with a wrongly programmed PIN code three times will block the SIM card. To unblock the SIM card, remove it and insert into a mobile phone. Then, enter the PUK code.*

# 6. GSM-X-ETH Ethernet module

The GSM-X-ETH Ethernet module enables the GSM-X LTE module to be expanded by adding the Ethernet link. Using Ethernet, you can:

- send event codes to the monitoring station,
- configure the settings of GSM-X LTE module from the GX Soft program,
- configure the settings of INTEGRA / INTEGRA Plus control panel connected to the GSM-X LTE module from the DLOADX program,
- administer the INTEGRA / INTEGRA Plus control panel connected to the GSM-X LTE module from the GUARDX program,
- download new firmware for the GSM-X LTE or GSM-X-ETH module from the “UpServ” update server.

## 6.1 Electronic boards

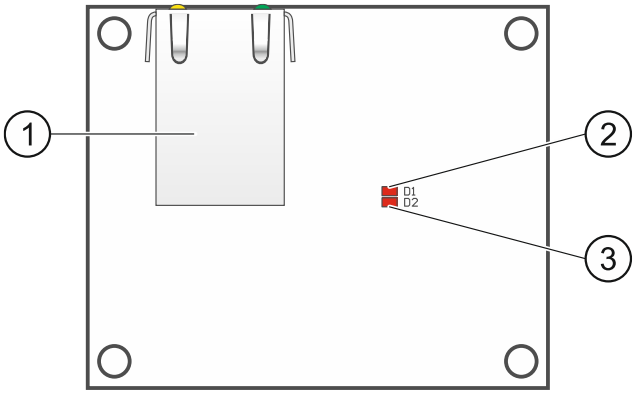


Fig. 18. GSM-X-ETH module electronic board.

(1) RJ-45 connector for Ethernet network. It is provided with two LEDs:
green – ON when control panel is connected to network,
yellow – flashing during data transmission.

(2) D1 LED indicating the current status of module connection with the Ethernet network:
flashing – module communicates with Ethernet,
ON – Ethernet cable connected to the RJ-45 connector,
OFF – Ethernet cable disconnected or no Ethernet communication.

(3) D2 LED indicating the current status of module connection with the GSM-X LTE module:
flashing – communication with GSM-X LTE module OK,
OFF – no communication with GSM-X LTE module. Make sure that the “GSM-X-ETH/PSTN” option, “GSM-X-ETH/PSTN” tab, is enabled (see p. 37).

## 6.2 GSM-X-ETH module installation

**The device is designed to be used only in the local area networks (LAN). It must not be connected directly to the public computer network (MAN, WAN). For establishing connection with public networks, use a router or xDSL modem.**

1. Use the GX Soft program to configure settings of the GSM-X-ETH module (see p. 36).
2. Power down the GSM-X LTE module.
3. Install the GSM-X-ETH module in the connectors on the GSM-X LTE module electronics board (Fig. 19).

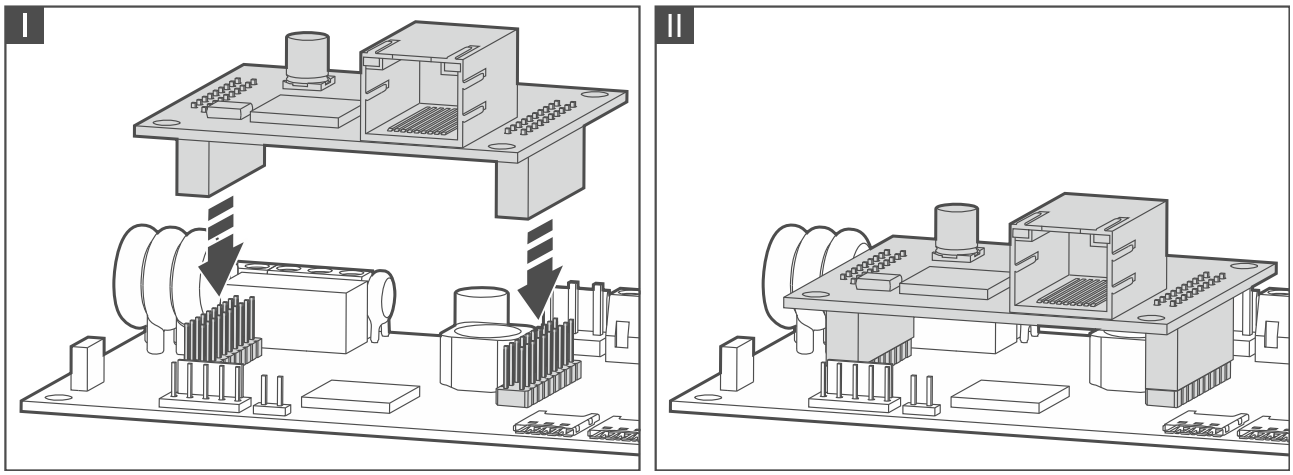


Fig. 19. Installing the GSM-X-ETH module on GSM-X LTE module electronics board.

4. Connect the Ethernet cable to the RJ-45 connector on GSM-X-ETH module. Use a 100Base-TX standard compliant cable, identical to that used for connecting computers to the network.
5. Power up the GSM-X LTE module.

# 7. GSM-X-PSTN telephone module

The GSM-X-PSTN module is used to connect the analog telephone line (PSTN) which enables:

- sending event codes to the monitoring station (AUDIO reporting).
- event notification (voice messages) – required module firmware version: 1.01 (or newer).

## 7.1 Electronics board

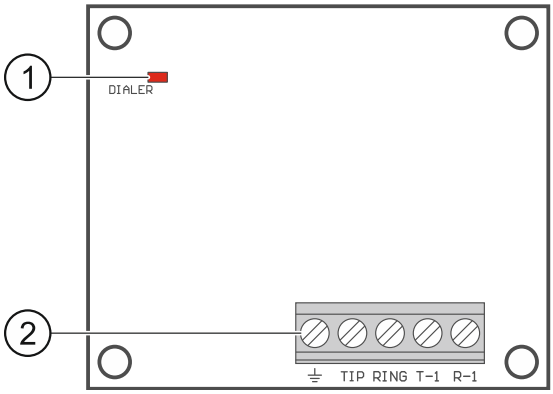


Fig. 20. GSM-X-PSTN module electronics board.

(1) DIALER LED indicating the current module status:
flashing – module working correctly,

OFF – no connection with GSM-X LTE module. Make sure that the “GSM-X-ETH/PSTN” option, “GSM-X-ETH/PSTN” tab, is enabled (see p. 37).

(2) terminals:

⏚ – protective terminal of telephone module (to be connected only to the PE protective earth circuit of 230 VAC mains).

**TIP, RING** – analog telephone line input (from telephone provider).

**T-1, R-1** – analog telephone line output (for connecting the GSM-X LTE module).

## 7.2 GSM-X-PSTN module installation

**The module works only with the analog telephone line.**

**Do not connect any other telephone device between the module and the incoming telephone line.**

**Let the user know how the module is connected to the telephone network.**

1. Use the GX Soft program to enable the GSM-X-PSTN module support (see p. 36).
2. Power down the GSM-X LTE module.
3. Install the GSM-X-PSTN module in the connectors on the GSM-X LTE module electronics board (Fig. 21).
4. Connect terminals T-1 and R-1 of the module to terminals TIP and RING of the GSM-X LTE module (Fig. 22).
5. Connect the incoming telephone line to terminals TIP and RING. If the ADSL service is used on the premises, the module should be connected after the ADSL filter (Fig. 22).
6. Connect terminals T-1 and R-1 of the GSM-X LTE module to terminals TIP and RING of the control panel (Fig. 22). Any telephone located on the premises can be connected to terminals T-1 and R-1 of the control panel.

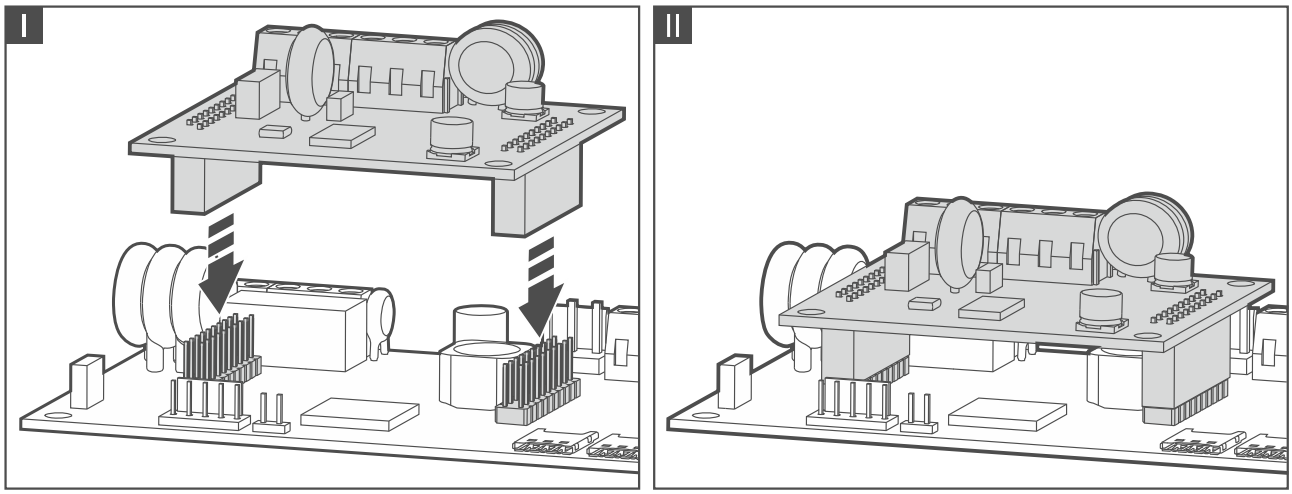


Fig. 21. Installing the GSM-X-PSTN module on the GSM-X LTE module electronics board.

7. Connect terminals ⏚ of the GSM-X LTE and GSM-X-PSTN modules to the protective earth conductor (PE) of the 230 VAC mains (Fig. 22). To make the connection, use a wire with ≥0.75 mm$^2$ cross-section. Never connect the ⏚ terminal to the neutral conductor (N).
8. Power up the GSM-X LTE module.

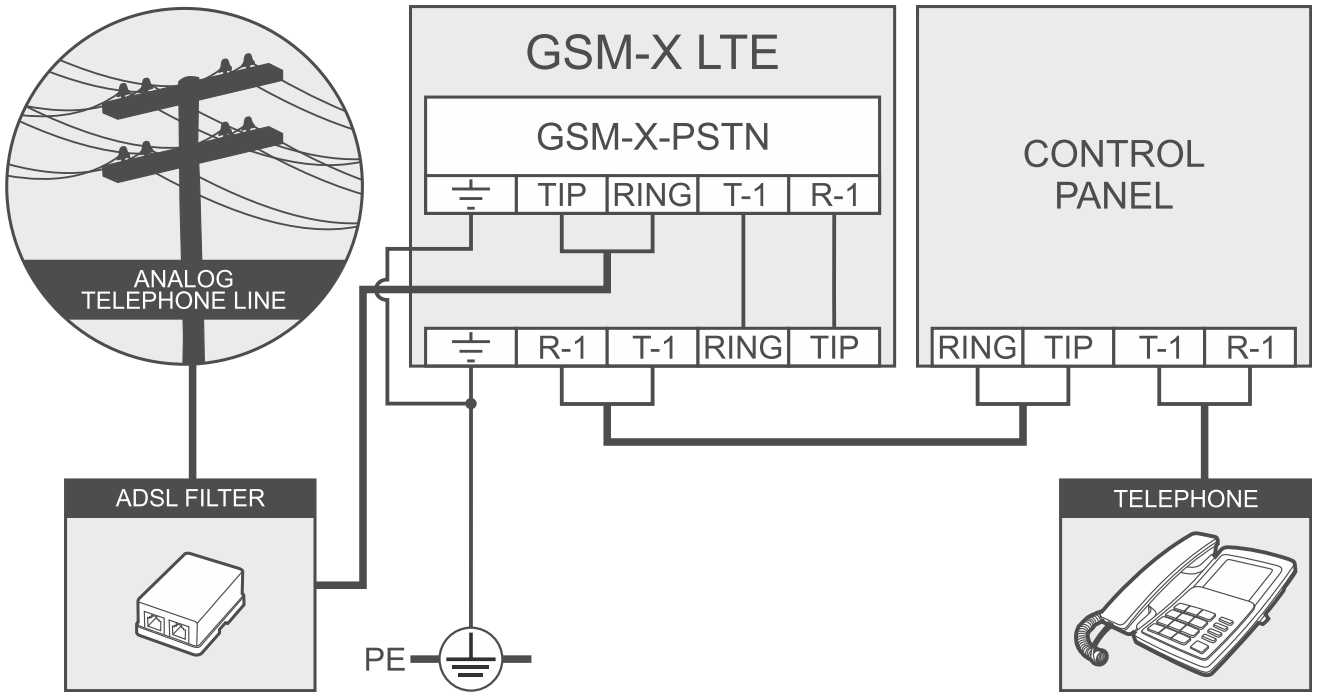


Fig. 22. Connecting the GSM-X-PSTN module to the GSM-X LTE module.

# 8. Programming

You can configure all the module settings by using a computer with GX Soft program installed. Required program version: 2.1.5 (or newer).

Communication between the computer and the module can take place locally (via USB port) or remotely (via cellular network or, optionally, via Ethernet).

Module can be programmed locally and remotely. Remote programming is only possible after settings for communication via cellular network (see p. 34) or Ethernet (see p. 36) are configured. Communication between the program and the module is encrypted.

Having programmed the SMS control commands in the module (see “SMS/DTMF control” p. 56), you can set some working parameters of the module by using SMS messages.

## 8.1 Description of the GX Soft program

Access to the program can be password protected (see ““Settings” window” p. 28).

### 8.1.1 Startup window

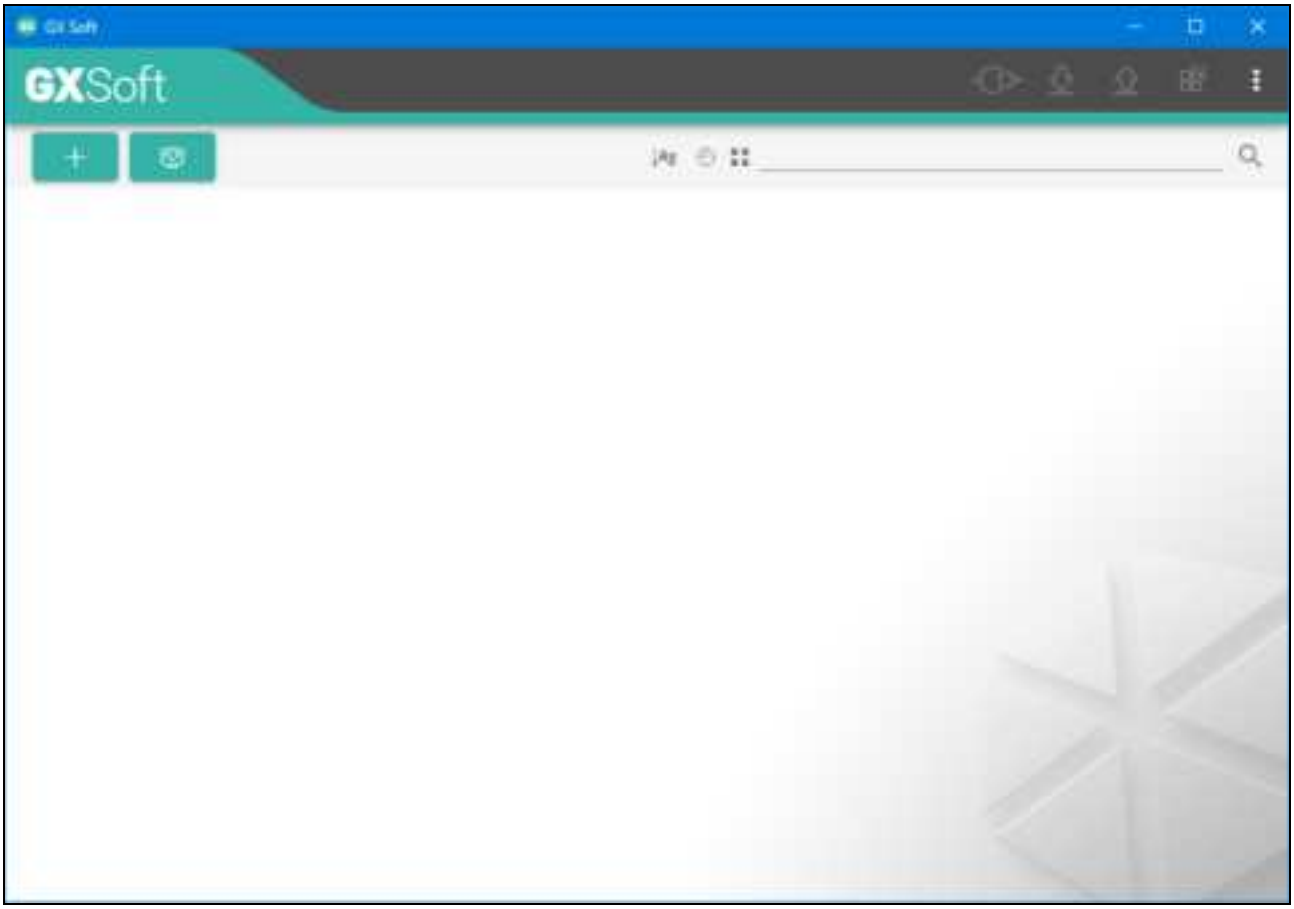


Fig. 23. GX Soft window when the program is run for the first time.

In this window you can manage projects created in the GX Soft program.

***Buttons***

| | |
|---|---|
| UPDATE | click to update the GX Soft program. The button is displayed when new program version is available. |
| + | click to add a new project with module factory default settings. |
| | click to import a project with module settings. |
| Az | click, if the projects are to be sorted by name (the arrow next to the button indicates whether the projects are displayed from A to Z or from Z to A). This button is displayed if project details are presented in brief version. |
| | click, if the projects are to be sorted by the time they were saved to disk (the arrow next to the button indicates whether the projects are displayed in the descending or ascending order). The button is displayed if project details are presented in brief version. |
| | click, if project details are to be presented in brief version. |
| | click, if project details are to be presented in full version. |
| | click to delete the project. The button is displayed when you hover the mouse over the project. |

### Search field

The search field is displayed in the top part of the window. If you want to find a project file:

1. Click on the search field and enter a string of characters included in the file details (e.g. the project name or date created).
2. Click 🔍. Projects that meet the search criteria will be displayed.

*If you want to display all projects, click × in the search field (this will clear all the characters entered in the field).*

### Sorting projects

If the project details are presented in full version, click on the selected column header (e.g. “Project name”) to sort the list by the data in that column. The symbol indicating the current sorting method (↑ – ascending, ↓ – descending) will be displayed in the column header.

Fig. 24. GX Soft startup window with examples of projects.

### 8.1.2 Menu bar in the GX Soft program

The menu bar is displayed in the top part of the program window. Appearance of the menu bar depends on the contents presented in the window.

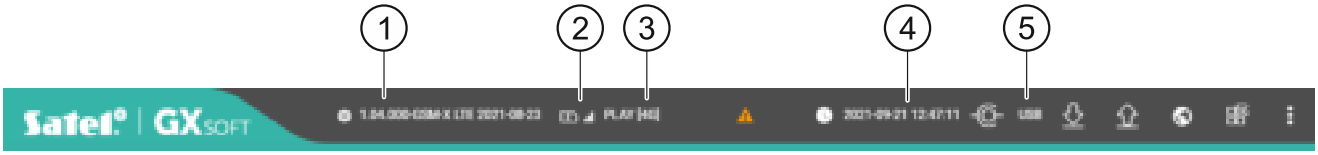


Fig. 25. The menu bar after establishing connection with the module.

1. module firmware version (number and date of compilation) and type of module.
2. information about the SIM card used, cellular signal level and operator of the cellular network used by the module communicator.
3. type of cellular network.
4. date and time according to the module clock (local time, taking into account the time zones). When you hover the mouse over the field, the time used by the module clock is displayed (Greenwich Mean Time (GMT)).
5. information on the way of communication with the module:
   USB – local connection,
   SRV – remote connection (cellular network or Ethernet network) through the SATEL server,
   TCP – remote connection (cellular network or Ethernet network) directly to the module.
   Click to see information on the connection status.

***Buttons***

| | |
|---|---|
| | click to display the list of troubles. |
| | click to update date and time in the module. |
| | click to establish connection to the module. The button is displayed when the program is not connected to the module. |
| | click to finish connection to the module. The button is displayed when the program is connected to the module. |
| | click to read data from the module. |
| | click to write data to the module. If data entered in the program are invalid (e.g. format is wrong or value is outside defined range), a red dot will be displayed on the button: . Invalid data will not be written to the module. |
| | click to send a test transmission to the monitoring station. |
| | click to display the status panel. The button is available after connection to the module is established. |
| | click to display the additional menu. |

### 8.1.3 Side menu

The side menu is displayed on the left side of the program window after you open a project. The buttons displayed in the menu open the tabs used for configuration of the module settings. If data entered in the tab are invalid, a red dot will be displayed on the button.

| | |
|---|---|
| | click to minimize the menu. |
| | click to display the full menu. |
| | click to show the submenu. |
| | click to hide the submenu. |

### 8.1.4 Status panel

The status panel is displayed after you click on .

### Status of inputs

input in normal status. Click to bypass the input.

input violated. Click to bypass the input.

input bypassed. Click to unbypass the input.

### Status of outputs

output inactive. Click to activate the output.

output active. Click to deactivate the output.

### SIM balance

Information on the balance of SIM card.

## 8.1.5 Additional menu

The additional menu is displayed after you click on . Appearance of the menu depends on the contents presented in the window.

**Open** – click to open a project.

**Save** – click to save the module data to file.

**Export** – click to export the file with module data.

**Connection** – click to open the “Connection” window.

**Settings** – click to open the “Settings” window.

**About** – click to display information about the program.

### “Connection” window

In the window, you can choose how connection with the module is to be established:

- if the module is to be programmed locally from the computer connected to the module USB port, select “USB”,
- if the module to be programmed remotely through SATEL server (cellular network or Ethernet, when the GSM-X-ETH module is connected), select “SATEL SERVER”,
- if the module to be programmed remotely (cellular network or Ethernet, when the GSM-X-ETH module is connected), but the module is to connect directly to the program, select “MODULE > GX SOFT”.

**Module key** – a string of characters for identification of the module. It must be identical to that programmed in the module (see “Communication” p. 40). Click to view the key.

#### *USB*

The modules connected to the computer via USB port are listed in the “USB” tab. Select from the list the module with which the program is to connect to.

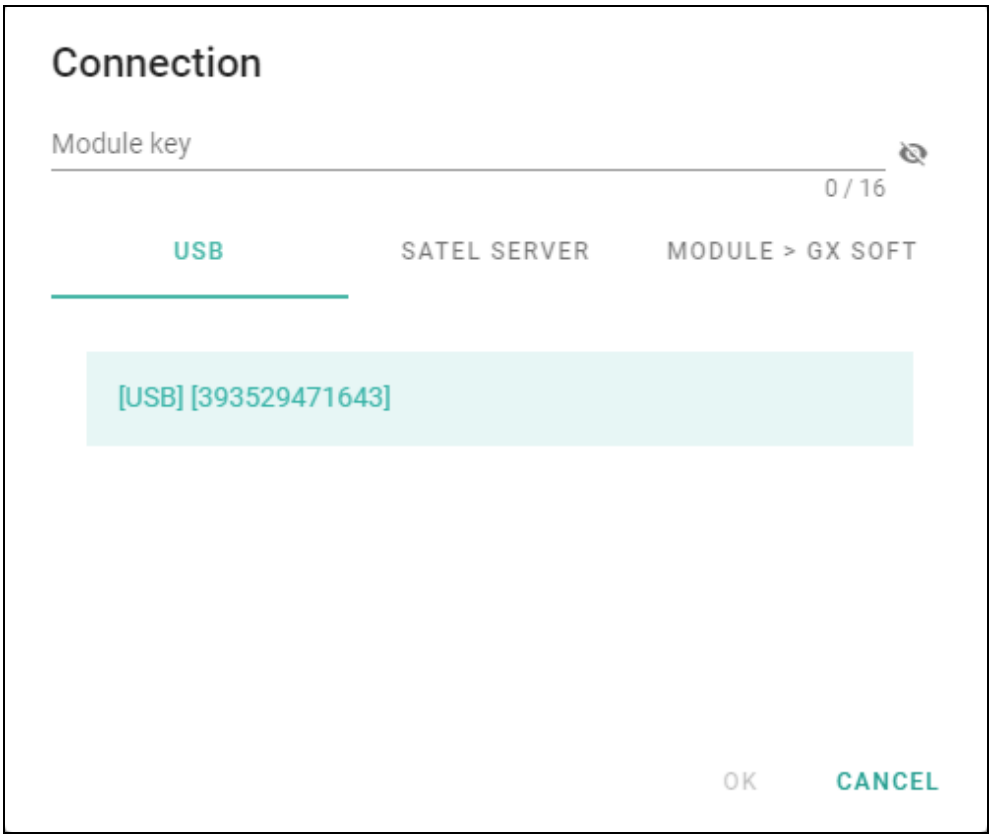


Fig. 26. “Connection” window: local connection settings.

***SATEL SERVER***

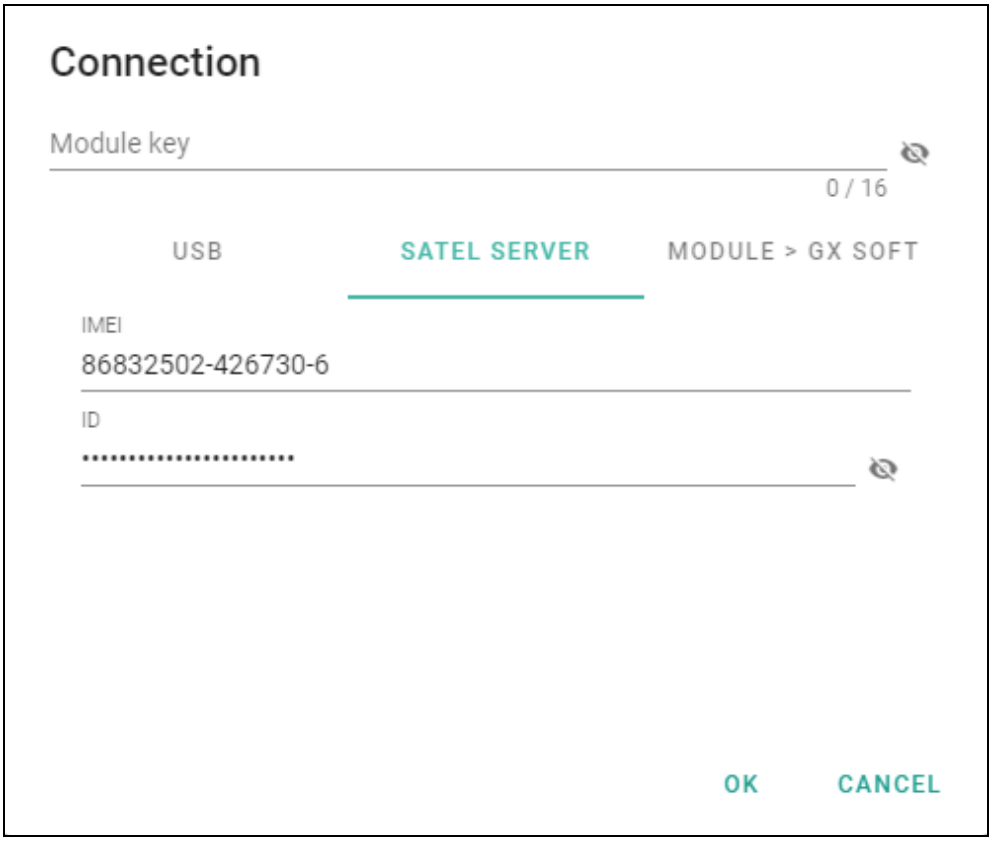


Fig. 27. “Connection” window: settings for establishing connection through SATEL server.

**IMEI** – individual identification number of the module cellular communicator.

**ID** – individual identification number for the purposes of communication through the SATEL server. The number is assigned automatically by the SATEL server during the first connection to the server (before the number is assigned, “F” characters are displayed). Click to view the number.

***MODULE > GX SOFT***

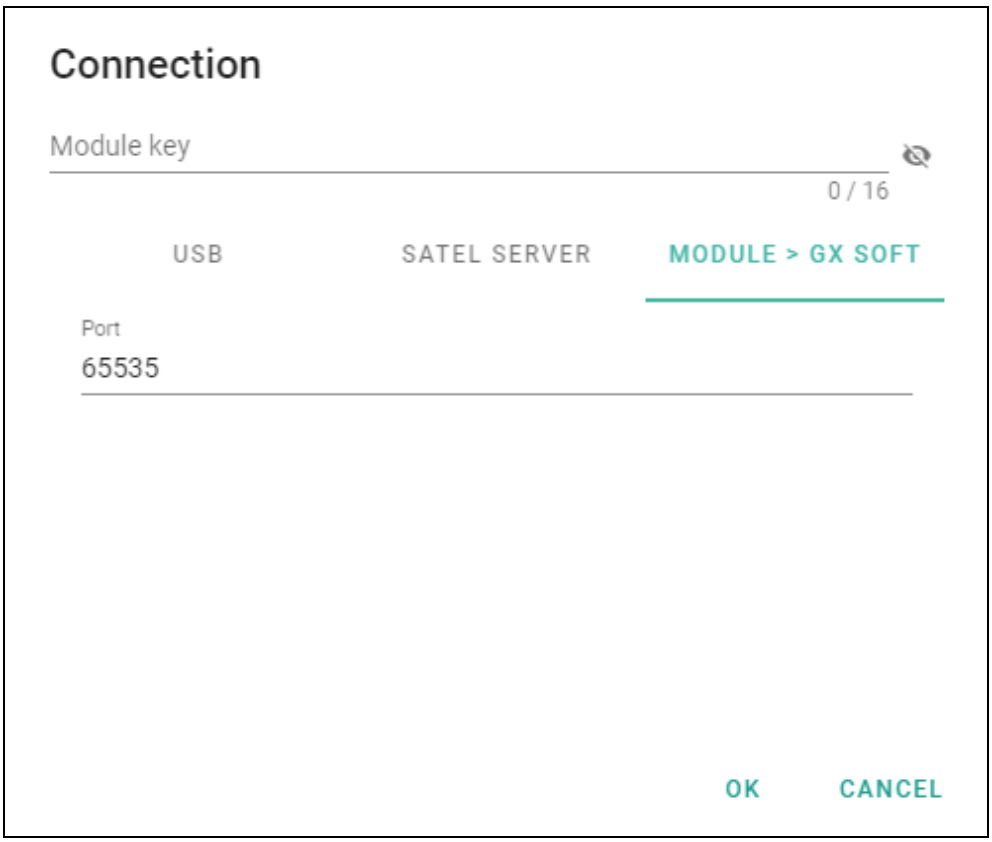


Fig. 28. “Connection” window: settings for direct connection with the module.

**Port** – number of the port on which the computer with GX Soft program is awaiting the incoming connections from the module.

***Buttons***

**OK** – click to confirm the changes.

**Cancel** – click to close window without saving changes.

## “Settings” window

***Password protection***

the program is not password protected. Click to enable password protection.

the program is password protected. Click to disable password protection.

**GX Soft password** – program access password. Click to view the password.

**Confirm GX Soft password** – password verification. Click to view the password.

**IMEI** – individual identification number of the module cellular communicator. The field is available if the program has read the IMEI number from the module or from the module data file.

**Application language** – you can select a program language.

***Buttons***

**OK** – click to save changes.

**Cancel** – click to close window without saving changes.

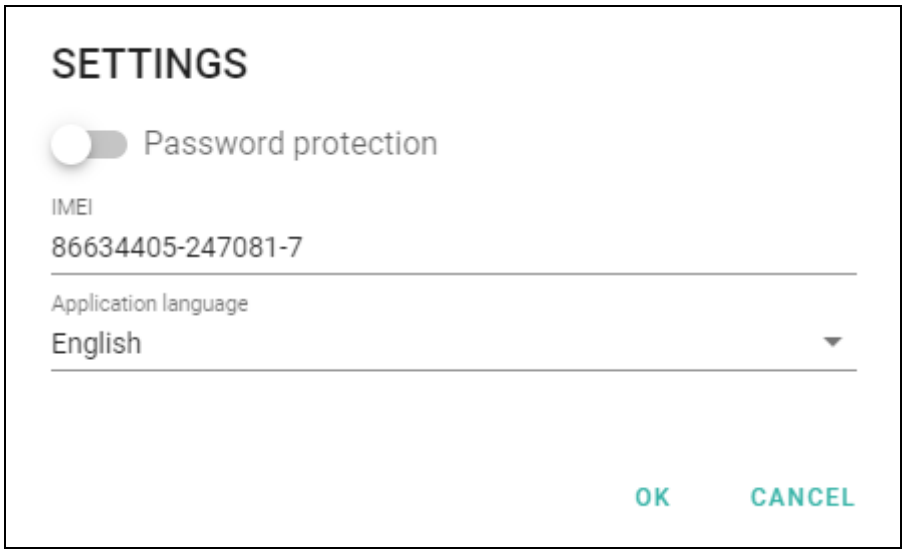


Fig. 29. “Settings” window.

## 8.2 Establishing connection between the program and the module

*Establishing connection is possible, if an identical “Module key” has been programmed in the module and in the program, except for the module with factory settings.*

### 8.2.1 Local connection

1. Connect the module USB MINI-B socket with the computer USB port using the proper cable.
2. In the startup window, open the file with module data (a file with default settings or a previously saved file).
3. In the “Connection” window, “USB” tab, select the module that you want to connect to (see ““Connection” window” p. 26).
4. Click on the menu bar.
5. A window will open with information that connection has been established and a prompt to read the data.
6. Click “Yes” if you want to read the data stored in the module.

### 8.2.2 Remote connection: SATEL server

*The “Connect to GX Soft” option must be enabled in the module (see “Communication” p. 40). By default, this option is disabled.*

1. In the startup window, open the file with module data (a file with default settings or a previously saved file).
2. In the “Connection” window, “SATEL SERVER” tab, configure the settings required to establish connection through the SATEL server (see ““Connection” window” p. 26).
3. Click on the menu bar.

4. A window will open with information that connection has been established and a prompt to read the data.
5. Click “Yes” if you want to read the data stored in the module.

### 8.2.3 Remote connection: Module > GX Soft

*The computer running the GX Soft program must have a public IP address.*

*Communication can take place via the cellular network or the Ethernet network, if the GSM-X-ETH module is connected to the GSM-X LTE module.*

*A control command, after receiving of which the module will make an attempt to establish connection, must be programmed in the module (see “Direct connection to GX Soft” p. 41).*

1. In the startup window, open the file with module data (a file with default settings or a previously saved file).
2. In the “Connection” window, “MODULE > GX SOFT” tab, configure the settings required to establish direct connection (see ““Connection” window” p. 26).
3. Click on the menu bar.
4. Send an SMS message with the following content to the number of SIM card currently used by the module:

   **xxxx** (“xxxx” – control command that initiates establishing connection with the GX Soft program) – the module is to connect to the computer whose address has been programmed in the module,

   **xxxx=aaaa:p=** (“xxxx” – control command that initiates establishing connection with the GX Soft program; “aaaa” – address of the computer running the GX Soft program; “p” – TCP port) – the module is to connect to the computer whose address has been given in the SMS message and use for communication the TCP port given in the SMS message. The “Server address from SMS” option must be enabled in the module (p. 41).
5. After the module connects to the computer, a window will open with information that connection has been established and a prompt to read the data.
6. Click “Yes” if you want to read the data stored in the module.

## 8.3 Project

The tab allows entering data for easier identification of the project created.

**Project name** – individual name of the project.

**Owner** – name of the project owner.

**Address** – project owner address data.

**Contact telephone** – project owner contact telephone number.

**Created by** – name of the project author.

**Created at** – date when the project was created.

**Updated at** – date when the project was last updated.

**Synchronized at** – date when the data from the module were last written / read.

**Module telephone number (SIM 1/ SIM 2)** – telephone number of SIM card installed in the module.

**Notes** – additional information / notes stored in the project.

**Note (stored in module)** – additional information / notes stored in module memory.

**Firmware version** – module firmware version: number and date of compilation.

**Radio firmware version** – version number of radio firmware.

**GSM-X-ETH/PSTN firmware version** – firmware version number of the GSM-X-ETH or the GSM-X-PSTN module (if connected to the GSM-X LTE module).

**GSM-X-ETH MAC** – MAC number of the GSM-X-ETH module (if connected to the GSM-X LTE module).

**IMEI** – individual identification number of the module cellular communicator.

**ID** – individual identification number of the module for the purposes of communication through the SATEL server (assigned automatically by the SATEL server). Click to view the number.

– click the button to open the window in which the QR code is displayed. The QR code contains information required when configuring settings of communication through the SATEL server. You can read the QR code by using a mobile device or export to PNG file and transmit to the users. The QR code facilitates configuring the GX Control application settings.

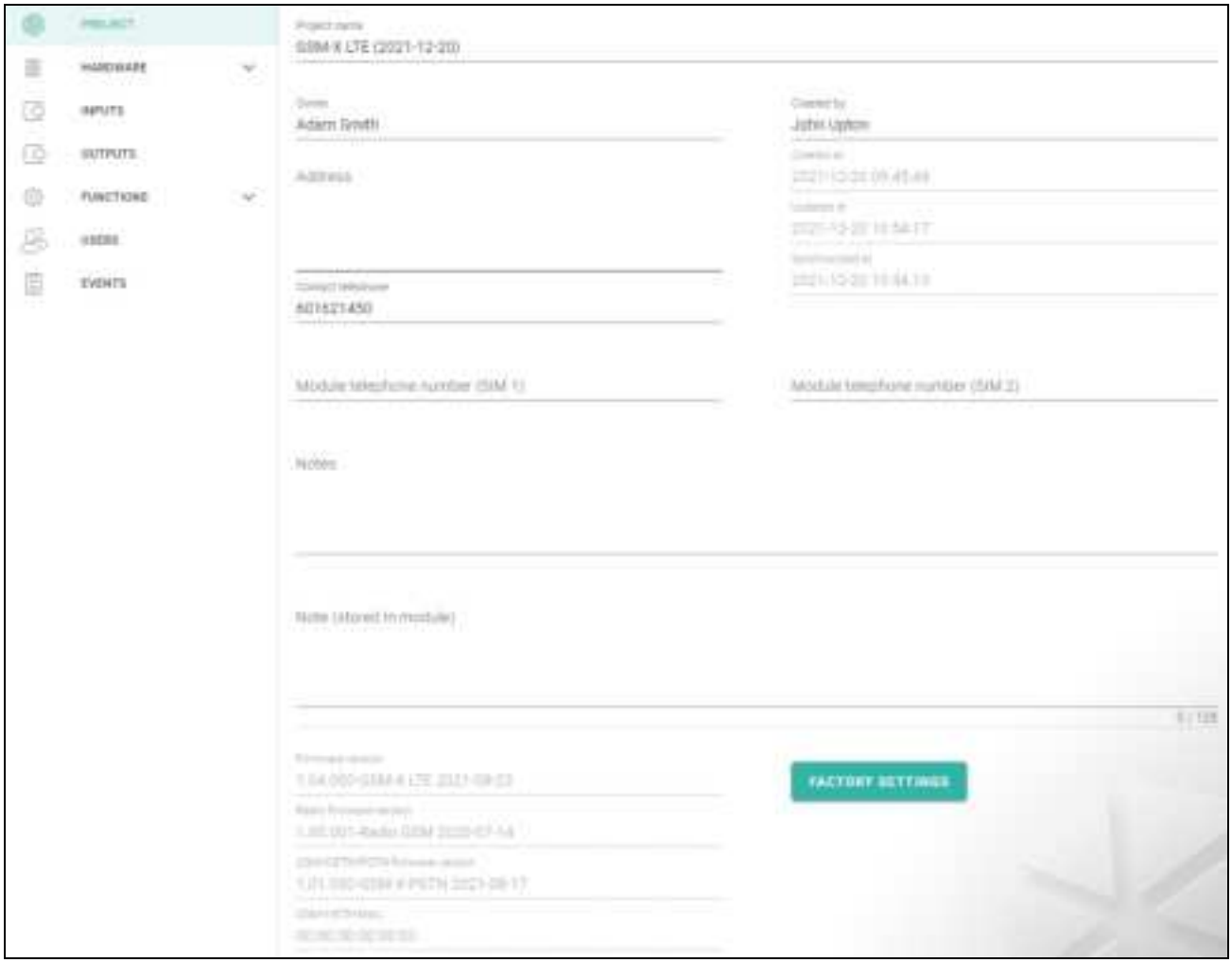


Fig. 30. “Project” tab.

**Factory settings** – click to restore module factory settings. A message box will be displayed in which you must confirm your intention to restore the factory settings of the module.

*The voice messages saved to the module memory will not be deleted when the module factory settings are restored.*

## 8.4 Hardware

### 8.4.1 Mainboard

**Module language** – you can select the default language to be used for any descriptions in the module. The names of inputs, outputs, users and descriptions of events in the GX Soft program and the GX Control application will be displayed in the language selected, regardless of the language version of the program (see ““Settings” window” p. 28) and application.

**GSM identifier** – a sequence of up to 6 alphanumeric characters to identify the module during communication with the STAM-2 monitoring station. Connection between the station and the module can only be established when the identifiers in program and module are identical. The factory default value: AAAAAA. Click to view the sequence of characters.

#### RS-232 mode

**INTEGRA / STAM-2 / Data Forwarding** – if this option is enabled, the module can be used in conjunction with the INTEGRA / INTEGRA Plus control panel, STAM-2 monitoring station or another device connected to the RS-232 port.

**AT commands** – if this option is enabled, the module can be used as an external modem. The module starts working in the modem mode on receiving the AT command, and stops working in this mode when the DTR signal is lost.

*Do not enable the “AT commands” option, if the module is working in conjunction with the INTEGRA / INTEGRA Plus control panel or STAM-2 monitoring station (the device is connected to the module RS-232 port).*

**RS-232 baud rate** – the rate of data transfer through the RS-232 port. The factory default setting: 19200.

**Telephone line loss delay** – the time after which the module will signal the loss of analog telephone line. Values from 0 to 99 minutes can be programmed. Programming the value 0 means that the module will not signal any trouble.

**GSM network loss delay** – the time after which the module will signal the cellular communicator trouble. Values from 0 to 99 minutes can be programmed. Programming the value 0 means that the module will not signal any trouble.

**GSM signal problem delay** – the time after which the module will report any problem with the cellular signal (e.g. signal jamming / interference). You can program from 0 to 30 seconds. The delay is set to 15 seconds by default.

**Ringing time** – the time during which the incoming cellular call can be answered by the device connected to the telephone line output. After this time has elapsed, the control from the telephone keypad (DTMF) will be available. Termination of the connection before this time elapses is interpreted as CLIP. Values from 0 to 99 seconds can be programmed.

*It is recommended that the voice mail be disabled.*

#### Time synchronization

*The module uses the Greenwich Mean Time (GMT), not the local time (the time zones are not taken into account).*

**NTP** – if this option is enabled, the module clock is synchronized with the time server.

**GSM** – if this option is enabled, the module clock is synchronized with the time of cellular network operator.

**NTP server** – time server address. The field is available if the “NTP” option is enabled. You can enter the IP address or domain name.

**Get time using** – you can select a channel for communication with the time server:

**GPRS** – cellular network.

**GSM-X-ETH/GPRS** – Ethernet network or cellular network. Ethernet has priority. Cellular network is used if there is no Ethernet communication.

**GSM-X-ETH** – Ethernet network.

Communication over the Ethernet network is possible when the GSM-X-ETH module is installed. The field is available if the “NTP” option is enabled.

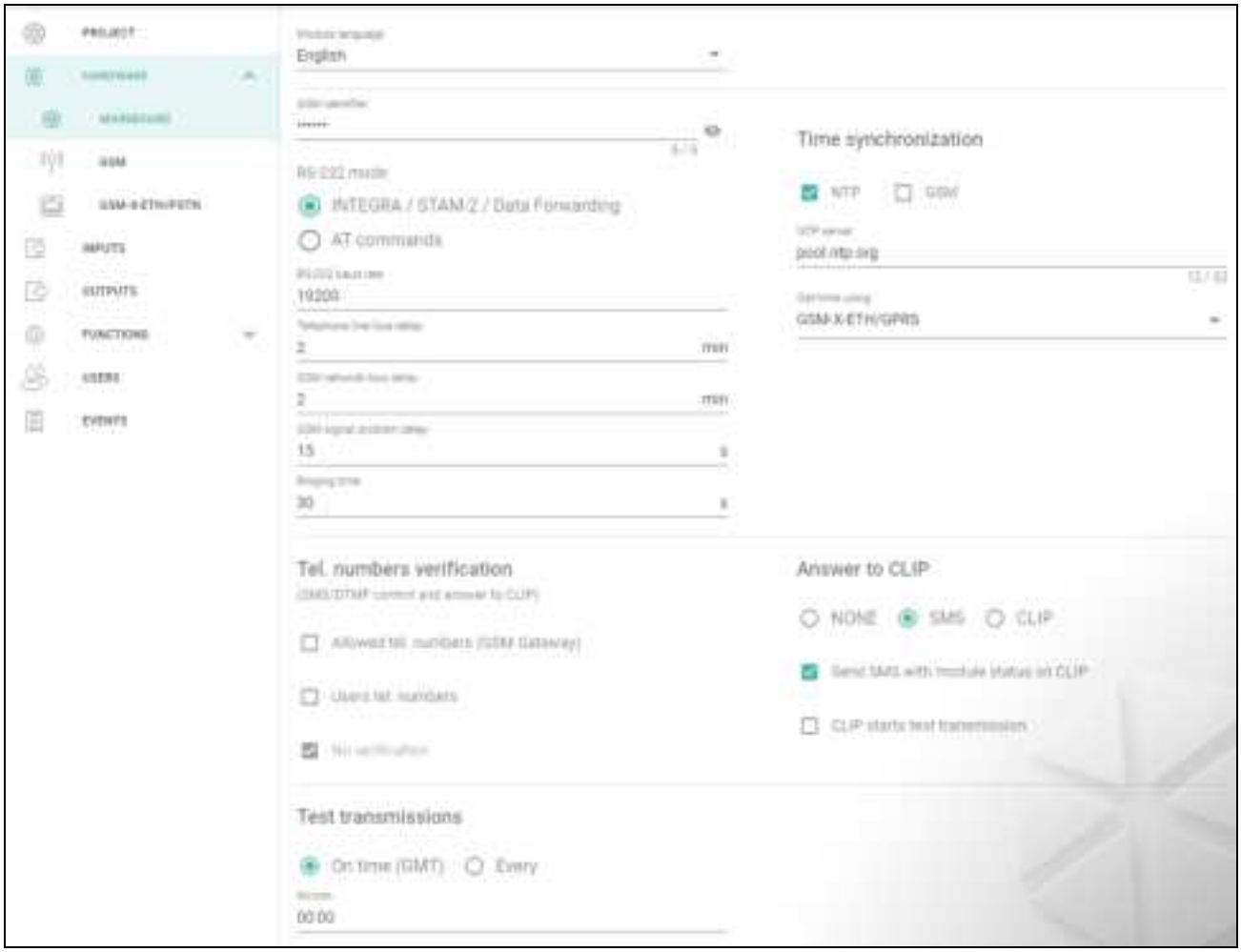


Fig. 31. “Mainboard” tab.

## Tel. numbers verification (SMS/DTMF control and answer to CLIP)

**Allowed tel. numbers (GSM Gateway)** – if this option is enabled, SMS and DTMF control is possible from the telephones on the “Allowed tel. numbers” list (see “GSM gateway” p. 42). The module can also answer to CLIP from a telephone on that list.

**Users tel. numbers** – if this option is enabled, SMS and DTMF control is possible from user telephones (see “Users” p. 65). The module can also answer to CLIP from a user telephone.

**No verification** – if this option is enabled, the module can be controlled from any telephone. The module can also answer to CLIP from any telephone.

## Answer to CLIP

The module offers the CLIP answering feature. CLIP means calling without establishing connection (you must hang up on hearing the first ring signal), i.e. toll-free. The module will identify the phone number of the calling party and respond accordingly.

**NONE** – select this option if the module is not to answer to CLIP.

**SMS** – select this option if the module is to answer to CLIP using SMS message.

**CLIP** – select this option if the module is to answer to CLIP using CLIP.

**Send SMS with module status on CLIP** – if the option is enabled, in response to CLIP the module will send an SMS message with the module status information (see p. 70). If the option is disabled, the module will send "GSM-X CLIP" SMS message in response to CLIP.

**CLIP starts test transmission** – if the option is enabled, CLIP will start a test transmission.

### Test transmissions

**On time (GMT)** – select this option if the test transmission is to be sent every day at a specified time. Define the hour and minute.

**Every** – select this option if the test transmission is to be sent at specified time intervals. Define every how many days, hours and minutes.

*The module will send a test transmission if, when configuring the module events distribution, you define the monitoring station to which a test transmission is to be sent (see "Module events distribution" p. 51).*

*If option "Send test transmissions using all paths" (p. 51) is enabled, the test transmission is sent using all transmission paths included in the list that defines the order of using transmission paths (see "Reporting priority" p. 50).*

## 8.4.2 GSM

### CELLULAR NETWORK SIGNAL

**RSSI (dBm)** – indicator of received radio signal strength.

**SIM 1** / **SIM 2** – if this option is enabled, the given SIM card is supported by the module. Disable the option, if the given card is not to be used. Disabling the option will prevent unnecessary reporting of troubles related to that card.

**PIN** – PIN code of the SIM card. Click to view the code.

*If an incorrectly programmed PIN code is used, the module will report a trouble and will be waiting until the correct PIN code is entered.*

*Restarting the module with a wrongly programmed PIN code three times will block the SIM card. To unblock the SIM card, remove it and insert into a mobile phone. Then, enter the PUK code.*

**GPRS APN** – access point name for Internet connection.

**Username** – user name for Internet connection.

**Password** – password for Internet connection.

**DNS 1 server** / **DNS 2 server** – IP address of DNS server to be used by the module. It is recommended to program the IP address of DNS server. The IP address is necessary for sending data via cellular network, if the address of the device the module is to connect to (monitoring station, computer with GX Soft program) is entered as a name.

*The Internet connection settings you can obtain from the cellular network provider.*

**SMS center number** – telephone number of the short message service center. It is required if the module is to send / receive SMS messages. It is usually stored in the SIM card and you do not have to program it. If the number is not stored in the SIM card, enter the number required by the SIM card operator.

**GPRS enabled** – enable this option if the data are to be sent via cellular network. If the option is disabled, sending data via cellular network is not available.

**Lock time** – the time during which switch-over to the other SIM card is impossible. The time is counted from the moment of switch-over to the given card. For reporting, the transmission paths programmed as subsequent ones, if they require switch-over to the other card, will be skipped during the lock time countdown. Entering the value 0 means that instant switch-over to the other SIM card is possible.

**Return time** – the time after which the other SIM card is to be used. Entering the value 0 means that automatic switch-over to the other SIM card will not take place.

*If two SIM cards are to be used, one of them must be treated as the priority card. It is recommended that return time equal to 0 be programmed for it.*

**Limit number of notifications per day to** – this field allows you to specify the maximum number of transmissions (GPRS/LTE, SMS, CLIP) made by the module during a day. Values from 0 to 255 can be entered. Entering 0 means no transmission limit (default: 0).

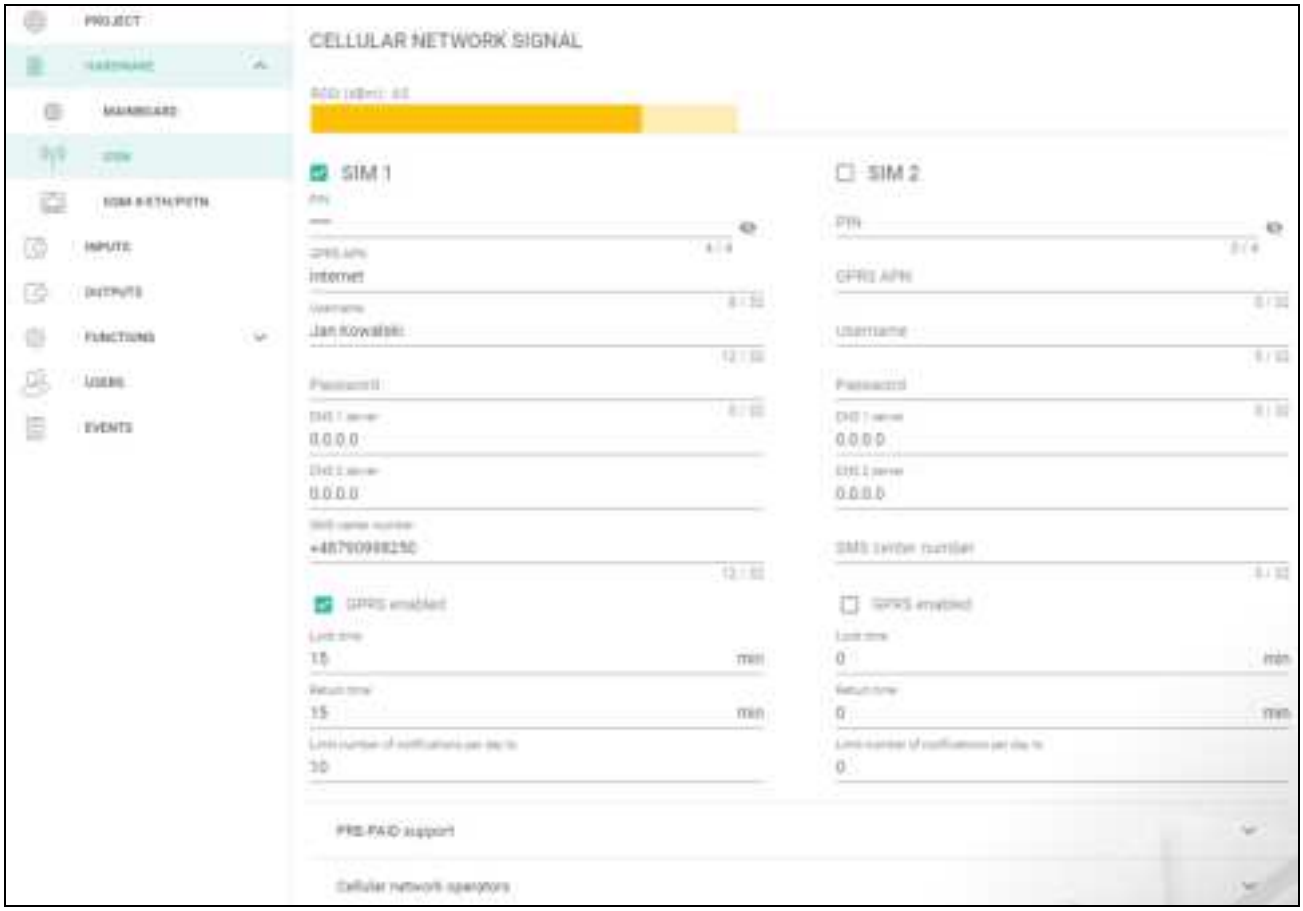


Fig. 32. “GSM” tab.

## PRE-PAID support

**Check balance USSD code** – the USSD code which is used to check balance of the SIM card account. If the code has been programmed, the module can check the SIM card account balance.

**Minimum balance level** – the minimum amount of funds on the SIM card account. If the amount of funds drops below the minimum level:

– trouble will be reported,

– where the SIM card account balance is checked automatically, information on the account balance will be sent as an SMS message to the phones of users for which the “Forward SMS” option is enabled (see “Users” p. 65).

**Check balance every** – the field defines every how many days, hours and minutes the module will perform the SIM card balance check. Entering 00:00:00 will disable the check.

### Cellular network operators

**Preferred network type** – the type of network to which the SIM card is to log in. You can leave the “Auto” default setting (the module communicator will connect to 2G and 4G network) or force the SIM card to connect only to a selected type of network (2G or 4G).

**MCC/MNC code** – codes of the operator of cellular network to which the SIM card is to log in. Enter in turn:

– MCC (Mobile Country Code) – country code,

– MNC (Mobile Network Code) – operator code.

Remember that entering invalid data may make logging into the cellular network impossible. Unless you enter the code, the module will log into the SIM card operator network (“auto” option disabled) or into the network offering the best signal (“auto” option enabled).

– click if you want to download the list of cellular network operators. When the list appears, select one of the available cellular network operators. The operator's codes will be entered automatically.

**auto** – if this option is enabled and the module cannot log into the cellular network of the operator defined by means of the MCC/MNC code, it will log into the available cellular network.

### Advanced VoLTE settings

**Network profile** – LTE network profile to be used by the SIM card. You may leave the „Auto” default setting (the module communicator will use any network profile) or you can force the SIM card to use the Generic 3GPP profile.

**SMS in SGS mode** – if this option is enabled, the module can send / receive SMS messages in the SGS mode.

## 8.4.3 GSM-X-ETH/PSTN

Fig. 33. “GSM-X-ETH/PSTN” tab.

**GSM-X-ETH/PSTN** – if this option is enabled, the GSM-X-ETH / GSM-X-PSTN module is supported by the GSM-X LTE.

**Obtain IP address automatically (DHCP)** – select this option if GSM-X-ETH module IP address, subnet mask and gateway are to be downloaded automatically from the DHCP server.

**Use the following IP address** – select this option if you want GSM-X-ETH module IP address, subnet mask and gateway to be entered manually.

**IP address** – GSM-X-ETH module IP address.

**Subnet mask** – the mask of the subnet in which the GSM-X-ETH module is working.

**Gateway** – IP address of the network device through which the other devices in the local network can communicate with devices in other networks.

**Obtain DNS server address automatically** – select this option if the GSM-X-ETH module is to download IP address of the DNS server automatically from the DHCP server.

**Use the following DNS server address** – select this option if you want the IP address of DNS server to be entered manually.

**DNS server** – IP address of the DNS server which is to be used by the GSM-X-ETH module.

## 8.5 Inputs

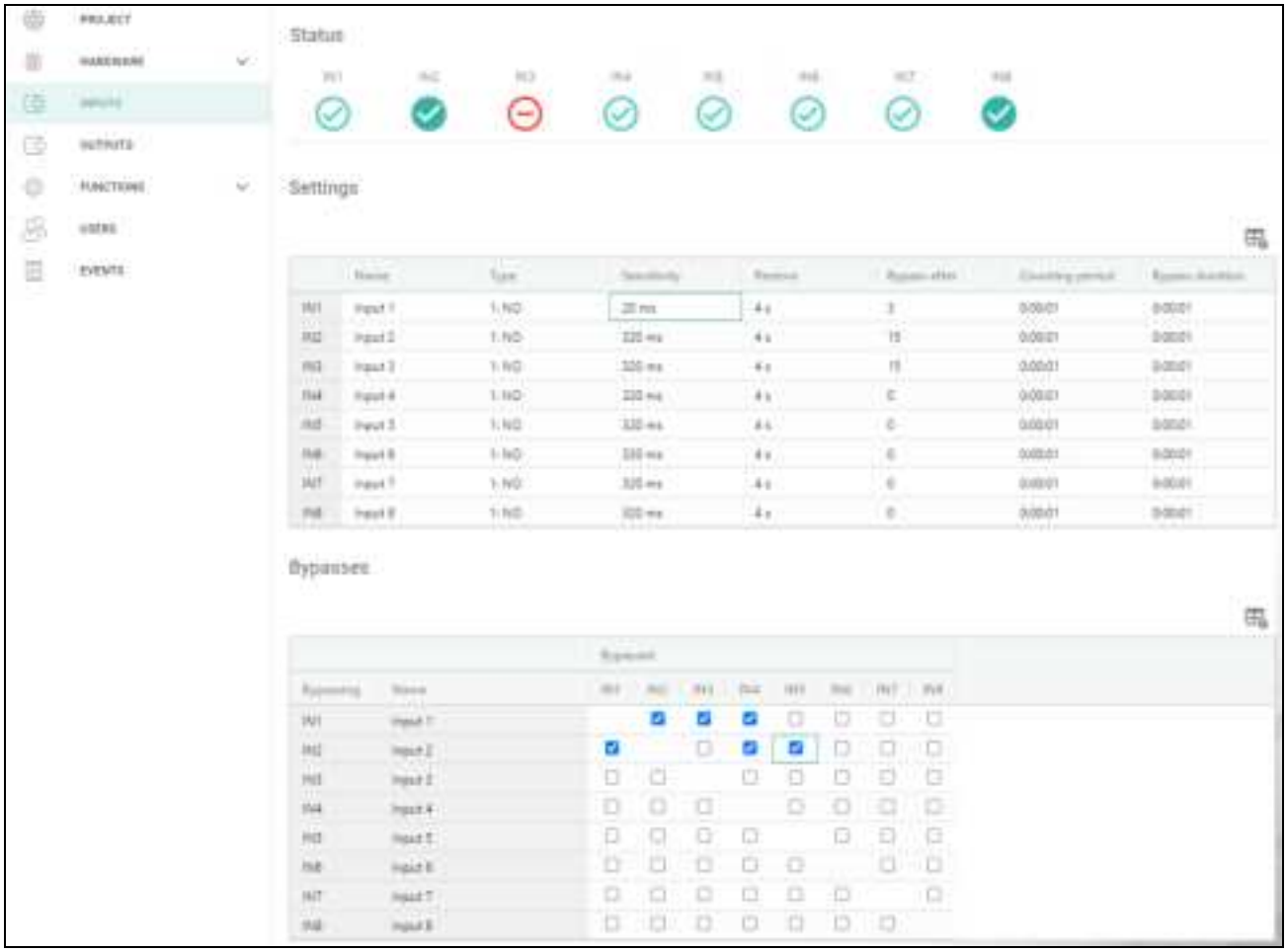


Fig. 34. “Inputs” tab.

### 8.5.1 Status

input in normal status. Click to bypass the input.

input violated. Click to bypass the input.

input bypassed. Click to unbypass the input.

The buttons are displayed when the program is connected to the module.

### 8.5.2 Settings

– click to show the table options. The options enable you to hide / show the selected columns in the table and to fit the columns to its content or to the width of the window.

**Name** – individual name of the input (up to 16 characters).

**Type** – you can program the input as NC (normally closed) or NO (normally open).

**Sensitivity** – the time during which the input must be violated, so that it can be noted by the module. You can enter from 20 ms to 5100 ms.

**Restore** – the time counted from the input restore, after which the module will recognize that the normal status of input is restored. You can program from 4 to 255 seconds.

**Bypass after** – the number of violations after which the input will be automatically bypassed (the input is bypassed after restore). You can program from 0 to 15. Value 0 means no bypass.

**Counting period** – the time after which the counter of violations programmed for the given input will be reset. You can program from 0 to 24 hours. Value 0 means that the violations will be counted without time limits.

**Bypass duration** – if the input is to be automatically bypassed for a specific time period, enter the time here. You can program from 0 to 24 hours. Value 0 means that the given input will be bypassed until unbypassed by the user.

### 8.5.3 Bypasses

– click to show the table options. The options enable you to hide / show the selected columns in the table and to fit the columns to its content or to the width of the window.

You can indicate the input whose violation will bypass other inputs of the module. When the input is restored, the bypassed inputs will be unbypassed. Each of the module inputs can bypass the other 7 inputs. The table lines present the “Bypassing” inputs, and the columns present the “Bypassed” inputs. If you want the input violation to bypass the other module inputs, select the field at the intersection of the corresponding line and column.

## 8.6 Outputs

### 8.6.1 Control

output inactive. Click to activate the output.

output active. Click to deactivate the output.

The buttons are displayed when the program is connected to the module.

### 8.6.2 Settings

**Name** – individual name of the output (up to 16 characters).

**Operating time** – time during which the output is active. Entering “0” will keep the output in the same status until deactivated by the user.

### Options

**Pulsed** – if this option is enabled, the output is pulsating when it is active.

**Problem with transmission to station 1 / 2** – if this option is enabled, the output will be active in the case of any problem with transmitting events to the monitoring station 1 / 2.

**Telephone line trouble** – if the option is enabled, the output is active in case of the analog telephone line trouble. The time during which the problem must occur for the output to be activated can be defined in the “Mainboard” tab (see “Telephone line loss delay” p. 32).

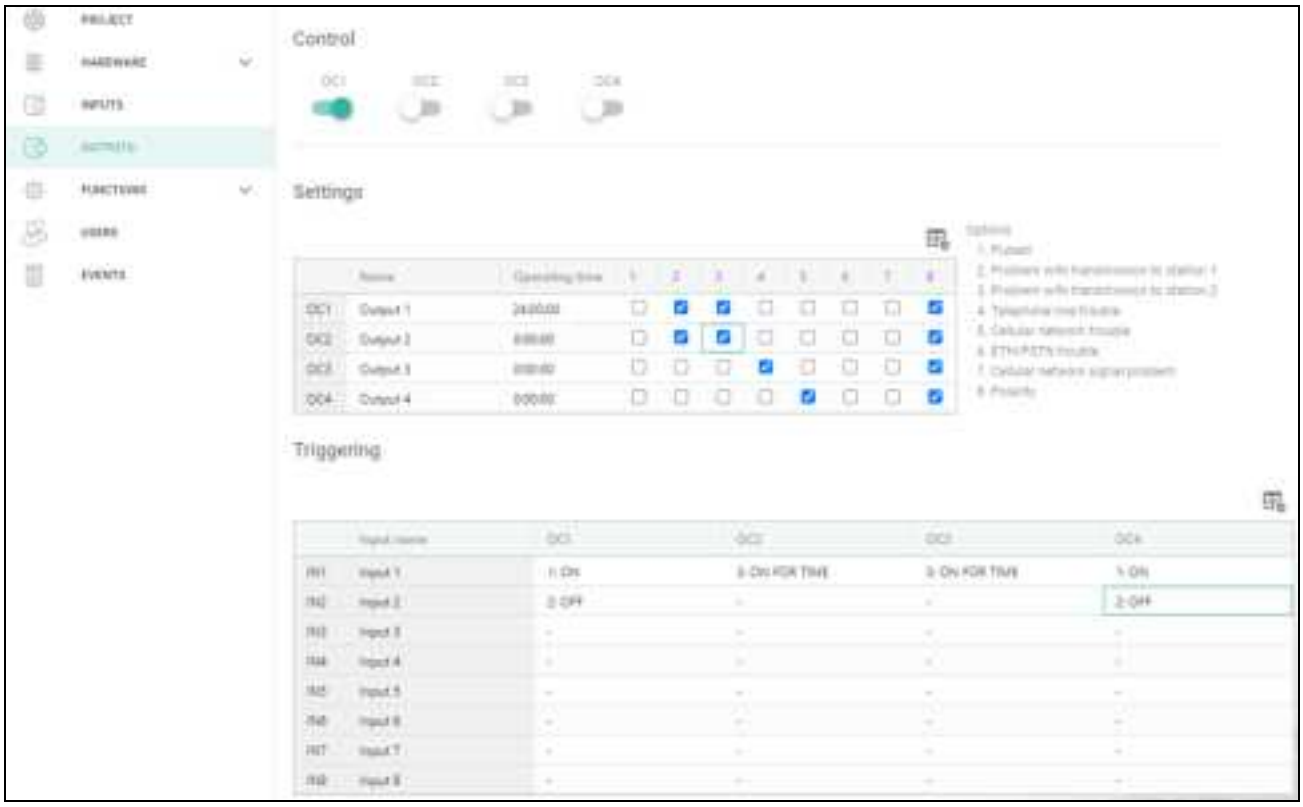


Fig. 35. “Outputs” tab.

**Cellular network trouble** – if this option is enabled, the output is active in case of a problem with logging into the cellular network. The time during which the problem must occur for the output to be activated can be defined in the “Mainboard” tab (see “GSM network loss delay” p. 32). The problem with logging into the cellular network can be caused by:

- missing SIM card,
- entering a wrong PIN code,
- missing or damaged antenna,
- unavailable cellular network (out of range),
- communicator damage.

**ETH/PSTN trouble** – if the option is enabled, the output is active in the case of any problem with the Ethernet network (e.g. GSM-X-ETH module failure) / the PSTN network (e.g. GSM-X-PSTN module failure).

**Cellular network signal problem** – if the option is enabled, the output is active in the case of any problem with the cellular signal (e.g. signal jamming / interference). The time during which the problem must occur for the output to be activated can be defined in the “Mainboard” tab (see: “GSM signal problem delay” p. 32).

**Polarity** – the option defines the operating mode of the output. If this option is disabled, the output is inverted.

| | Output | |
|---|---|---|
| | **option enabled** (normal polarity) | **option disabled** (reverse polarity) |
| **output inactive** | disconnected from ground | shorted to ground |
| **output active** | shorted to ground | disconnected from ground |

Table 1. Mode of output operation depending on the “Polarity” option.

### 8.6.3 Triggering

– click to show the table options. The options enable you to hide / show the selected columns in the table and to fit the columns to its content or to the width of the window.

You can define whether and how the inputs are to control the outputs. The table lines present the inputs, and the columns present the outputs of the module. If you want the input violation to change the output status, select one of the available options in the selection field at the intersection of the corresponding line and column:

**-** – input does not control the output.

**1: ON** – violation of the input will activate the output.

**2: OFF** – violation of the input will deactivate the output.

**3: ON FOR TIME** – violation of the input will activate the output for the time programmed in the “Operating time” field (see p. 38).

**4: TOGGLE** – violation of the input will switch the output to its opposite status.

**5: FOLLOW INPUT** – violation of the input will activate the output, and restoration of the input will deactivate the output.

## 8.7 Communication

**Module key** – a string of characters for identification of the module. You can enter up to 16 alphanumeric characters (digits, letters and special characters). You can use spaces, but at least one character must be different from space. Do not program the same key for different modules. Communication between the GX Soft program and the module is possible if the keys in the program and the module are identical. Click to view the key.

**Module** – module firmware version: number and date of compilation.

**IMEI** – individual identification number of the module cellular communicator.

**ID** – individual identification number for the purposes of communication through the SATEL server (assigned automatically by the SATEL server). Click to view the number.

**IP address** – GSM-X-ETH module IP address.

**Subnet mask** – mask of the subnet in which the GSM-X-ETH module is working.

**Gateway** – IP address of the network device through which the devices from a given local network communicate with the devices from other networks.

### 8.7.1 SATEL server

**Connect to GX Soft** – if this option is enabled, it is possible to establish connection between the GX Soft program and the module through the SATEL server.

**Connect to GX Control** – if this option is enabled, it is possible to establish connection between the GX Control application and the module through the SATEL server.

**Push notifications** – if this option is enabled, the GX Control application can provide information about events by means of push notifications.

*Make sure that the SIM card tariff plan is suited to the requirements of communication via the SATEL server (connection to the server is active at all times).*

**Channel** – you can select a channel that will be used for communication between the module and the SATEL server:

**GPRS** – cellular network.

**GSM-X-ETH/GPRS** – Ethernet network or cellular network. Ethernet network has priority. Cellular network is used if there is no communication over the Ethernet network.

**GSM-X-ETH** – Ethernet network.

Communication using the Ethernet network is possible if the GSM-X-ETH module is installed.

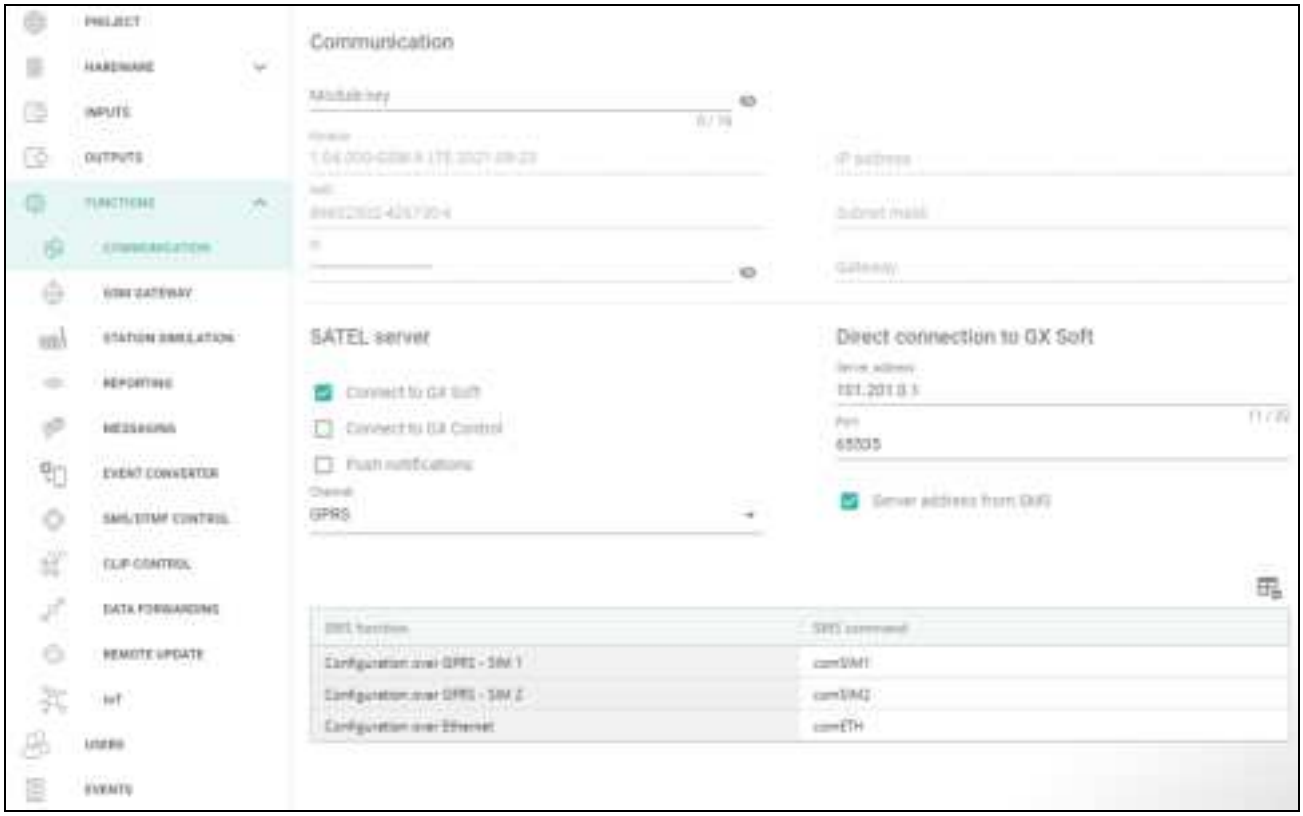


Fig. 36. “Communication” tab.

### 8.7.2 Direct connection to GX Soft

**Server address** – address of the computer running the GX Soft program. It must be a public address. You can enter the IP address or domain name.

**Port** – number of the TCP port used for direct communication between the module and the computer with GX Soft program. You can enter values from 0 to 65535 (0=disabled).

**Server address from SMS** – if this option is enabled, the address of server, to which the module is to connect, and the port number can be entered in the content of SMS message initiating the connection. If the address is not entered, the module will connect to the computer whose address has been programmed in the module.

**SMS function** – the function that is run on receiving the control message. The functions are used to establish communication between the module and the GX Soft program:

**Configuration over GPRS – SIM 1** – via cellular network using SIM1 card.

**Configuration over GPRS – SIM 2** – via cellular network using SIM2 card

**Configuration over Ethernet** – via Ethernet network (when GSM-X-ETH module is installed).

**SMS command** – the control command which, if sent in the SMS message, will initiate communication between the module and the GX Soft program. You can enter up to 16 alphanumeric characters except spaces (digits, letters and special characters).

*The content of control commands must vary.*

*The content of one control command must not be inserted into the content of another command.*

*In the SMS message, you can include address of the computer the module is to connect to, and the number of TCP port which is to be used for communication.*

## 8.8 GSM gateway

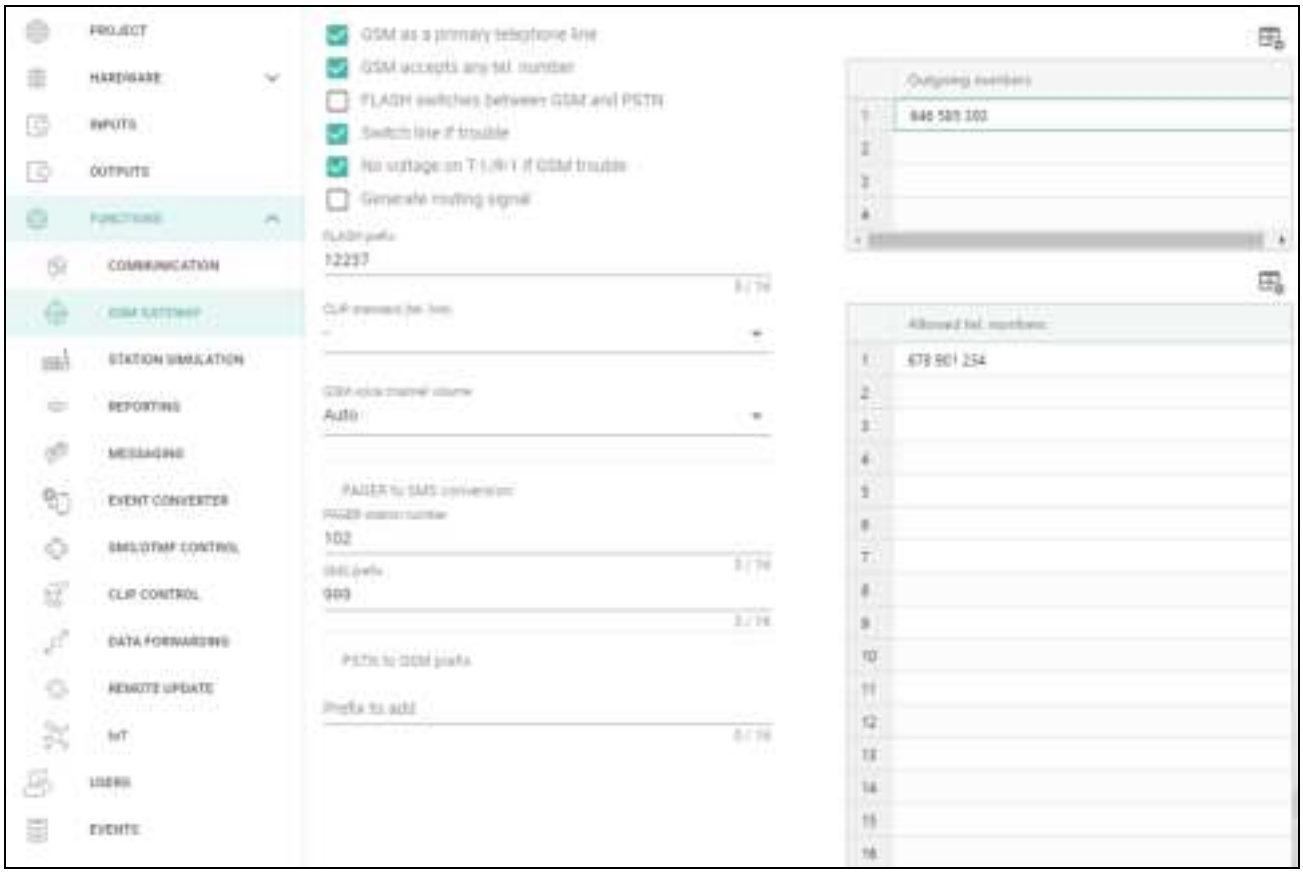


Fig. 37. “GSM gateway” tab.

**GSM as a primary telephone line** – if this option is enabled, the module cellular communicator is the primary communication path for devices connected to the telephone line output. If the option is disabled, the analog telephone line is the primary communication path.

**GSM accepts any tel. number** – if this option is enabled, the module cellular communicator can make calls to any number. If the option is disabled, the module cellular communicator can only make calls to the telephone numbers whose initial digits or whole numbers are programmed in the module (see “Allowed tel. numbers” p. 45).

**Flash switches between GSM and PSTN** – if this option is enabled, it is possible to switch between the primary and backup communication paths by using the FLASH key on the telephone connected to the telephone line output. To define the primary

communication path, use the “GSM as a primary telephone line” option. In the example shown in Fig. 38, analog telephone line is used as the primary path. If, after picking up the receiver, before dialing the number, you press the FLASH key, the backup path will be used, i.e. cellular communicator (Fig. 38-II).

**Switch line if trouble** – if this option is enabled, the module will automatically switch over to the backup communication path in case of the primary path trouble.

**No voltage on T-1/R-1 if GSM trouble** – if this option is enabled, voltage on the telephone line output will be turned off in case of the cellular communicator trouble.

**Generate routing signal** – if the option is enabled, the connection setup is audibly signaled.

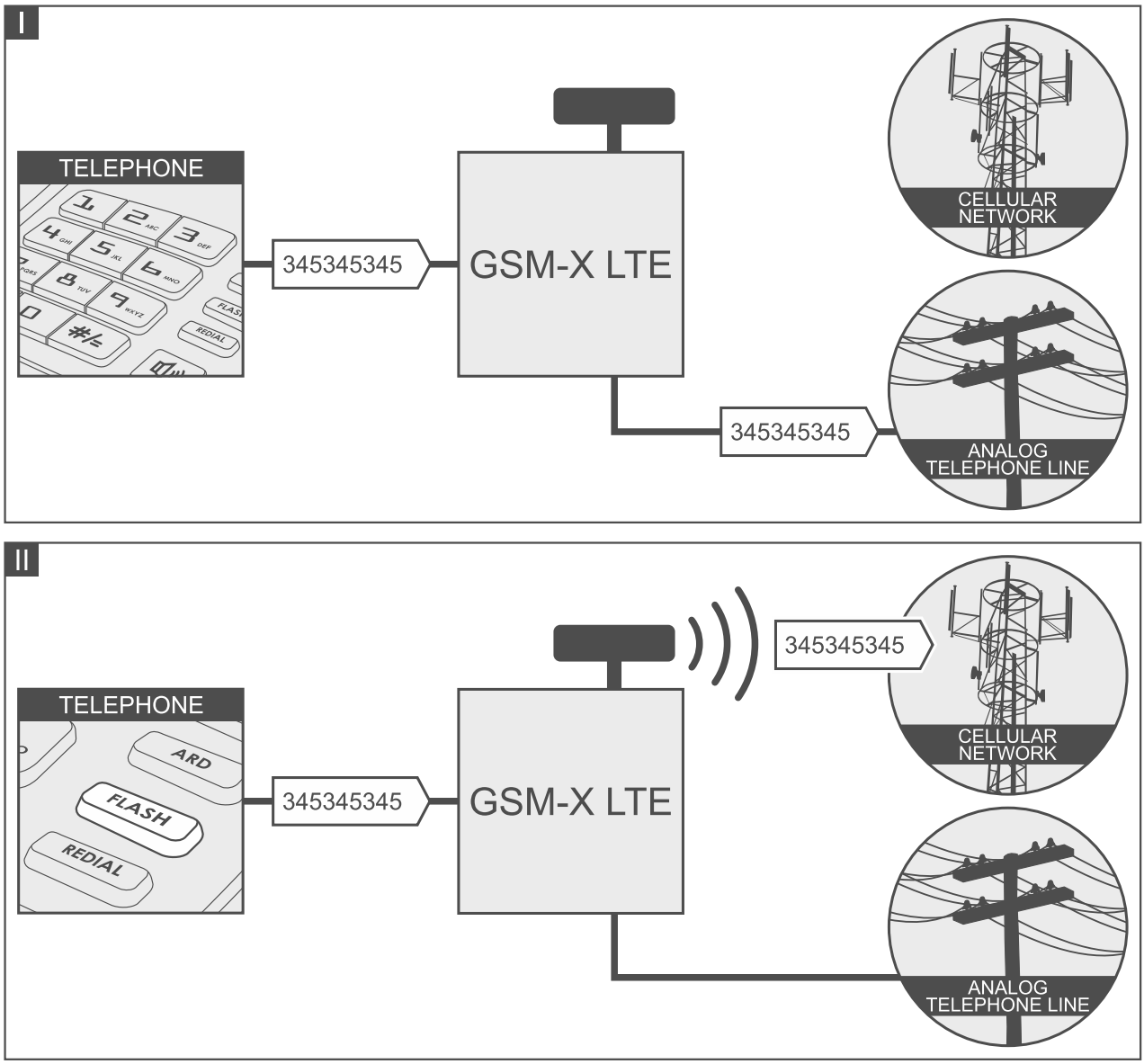


Fig. 38. Switching between the primary and backup communication paths by using the FLASH key.

**FLASH prefix** – a string of up to 16 digits for switching between the primary communication path and the backup one. To set the primary communication path, use the “GSM as a primary telephone line” option. In the example shown in Fig. 39, analog telephone line is used as the primary communication path. If the telephone number the control panel is calling is preceded by a prefix (a string of digits against black background – Fig. 39-II), the backup path will be used i.e. cellular communicator. In the control panel, you must

program two pauses after the prefix, before the telephone numbers, by entering two E or F characters.

**CLIP standard (tel. line)** – the module offers the caller identification feature. The following options are available:

- - [function disabled];
- FSK;
- DTMF.

**GSM voice channel volume** – you can select the volume level of calls made using the module cellular communicator.

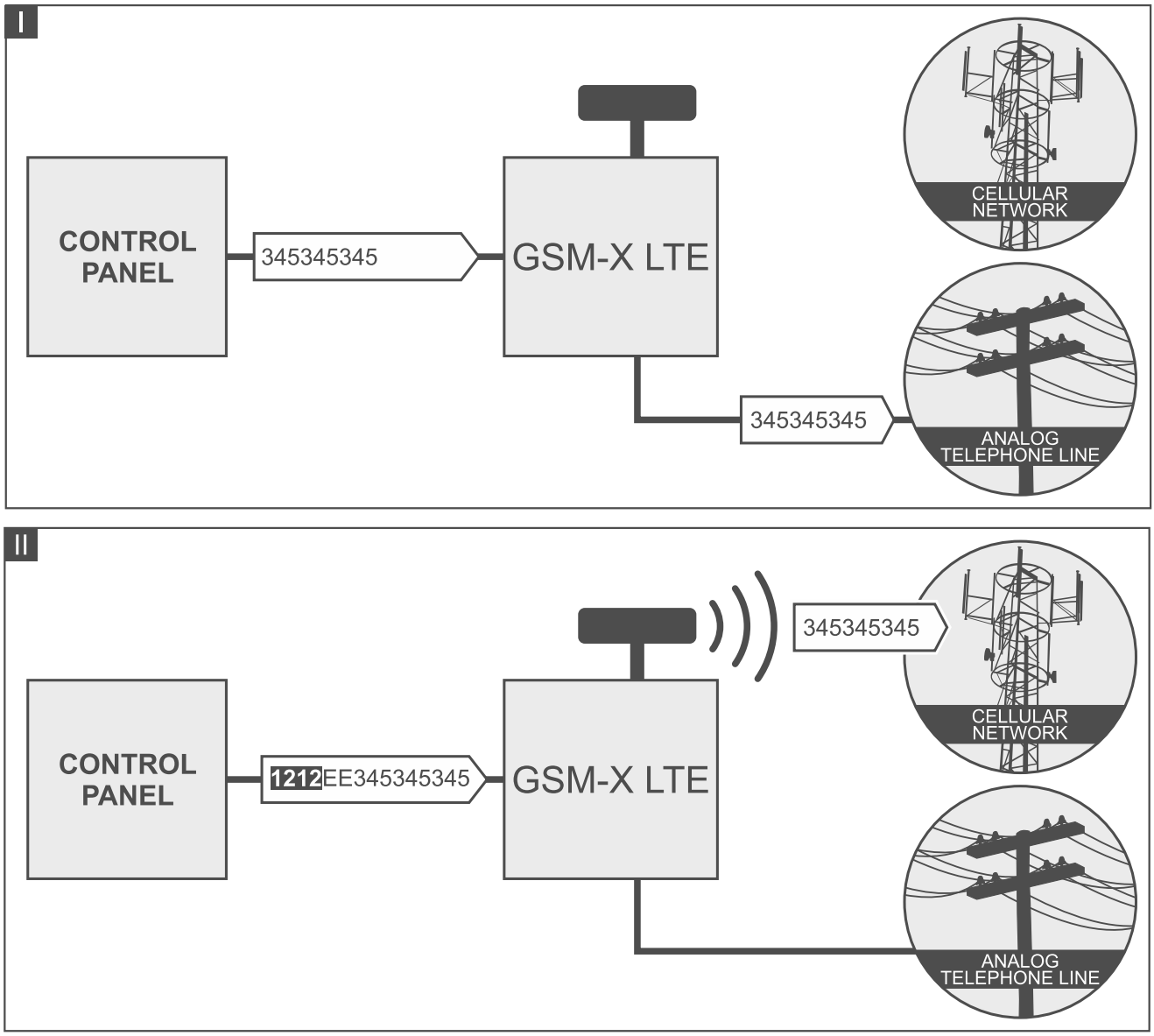


Fig. 39. Switching between primary and backup communication path by using “FLASH prefix”.

### 8.8.1 PAGER to SMS conversion

**PAGER station number** – the number after dialing of which by a device connected to the telephone line output the module will simulate the pager station. The further part of the dialed number will be treated as the cellular telephone number to which the PAGER type message will be sent in the form of SMS message. The pager station number can consist of up to 16 digits.

*The programmed number must be unique and must not coincide with any other number programmed in the module.*

**SMS prefix** – a string of up to 16 digits placed before the cellular telephone number to which the SMS message is to be sent. This option allows to add a country code before any telephone number.

### 8.8.2 PSTN to GSM prefix

**Prefix to add** – a string of up to 16 digits placed before a telephone number in the case of simulation of analog telephone line by using cellular connection. This option allows to add a country code before any telephone number.

### 8.8.3 Telephone numbers

*The telephone number may contain up to 16 digits.*

#### Outgoing numbers

You can program 4 phone numbers. If the number dialed by the device connected to the telephone line output coincides with the outgoing number, then, after the last digits of the outgoing number are dialed, the module will start converting the digits following the number and, using the cellular communicator, will set up connection to the number entered after the outgoing number.

#### Allowed tel. numbers

You can program 64 phone numbers from which and which you can call by using the cellular communicator. You can program the whole telephone number (including the country code) or only part of it. Up to five characters (consecutive digits from any part of the number, including "+") can be treated as part of the number. Six and more characters will be interpreted by the module as the whole telephone number.

## 8.9 Station simulation

**Station simulation** – if this option is enabled, the module can receive event codes from a device connected to the telephone line output (the module simulates the monitoring station).

**Events buffering** – if this option is enabled, each event received by the module from the control panel is written to the module event log and confirmed immediately on receipt. If the option is disabled, events from the control panel will not be written to the module event log, and the received event will only be confirmed after the module receives acknowledgement of the event receipt by the monitoring station.

#### Station 1 (ST1) / Station 2 (ST2)

**Reporting format** – format in which event codes are sent to the monitoring station. The following formats are supported: SIA, CID, AdemcoExpress, Sil.Knight/Ademco slow, Radionics 1400Hz, Radionics 1400Hz with parity.

**Obtain identifier automatically** – enable this option, if the control panel identifier is to be used by the module for module's own test transmissions. Enabling this option is not recommended when several identifiers are used by the control panel for reporting purposes (when sending a code of module related event, the identifier used last time by the control panel will be used, which means that events related to the module can be sent with different identifiers).

**Replace obtained identifier** – enable this option, if the module, after receiving the event code from the control panel and before sending it to the monitoring station, is to replace the identifier in event code with characters programmed in the "Module identifier" field (see: "Reporting" tab p. 48).

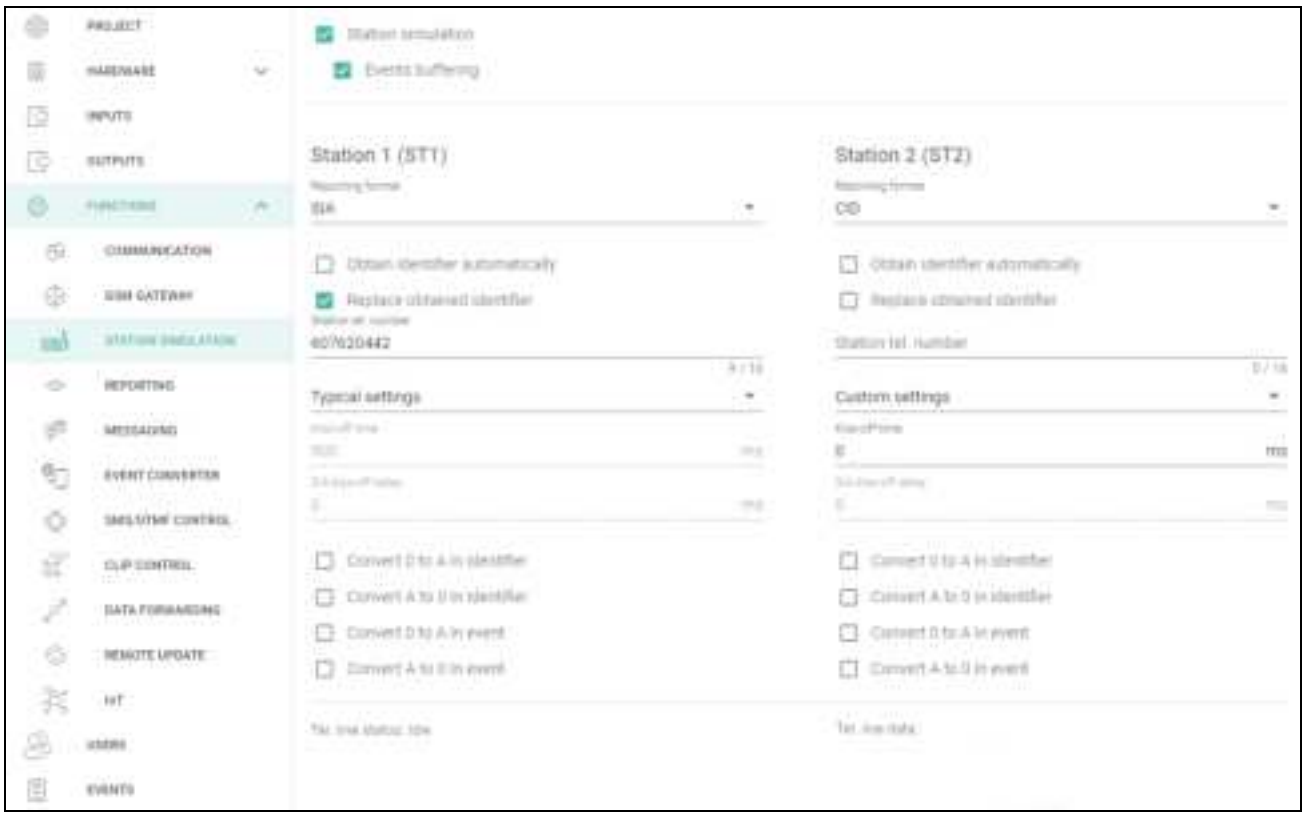


Fig. 40. “Station simulation” tab.

**Station tel. number** – if this number is dialed by the device connected to the telephone line output, the module will be receiving the event codes. If the “Reporting” option (p. 47) is enabled in the module, the received codes can be retransmitted by the module to the monitoring station. Define how they should be sent – see “Reporting priority” p. 50.

*The programmed number must be unique and must not coincide with any other number programmed in the module.*

**[Kiss-off]** – the way of setting the “Kiss-off time” and “SIA kiss-off delay” parameters.

**Custom settings** – you can set the parameters manually.

**Typical settings** – the parameters are set automatically, as required by the selected reporting format (“Reporting format”).

**[control panel]** – the parameters are set automatically, as required by the selected alarm control panel.

**Kiss-off time** – duration of the signal generated by the module to confirm receipt of the event from the control panel. The value entered must be suitable for the reporting format selected in the control panel. You can program from 0 to 9999 ms (default: 0 ms). Programming value 0 means that the kiss-off time will be programmed according to the standard of the format selected in the control panel.

**SIA kiss-off delay** – the time by which the acknowledgment of receipt by the module of the event in SIA format will be delayed. The value entered must be suitable for the control panel settings. You can program from 0 to 9999 ms (default: 0 ms). Programming value 0 means that the time of kiss-off delay will be programmed according to the SIA format standard.

### Conversion

For events in Ademco Express and Contact ID format, you can select the following options:

**Convert 0 to A in identifier** – if this option is enabled, the module will convert 0 into A in the identifier of event sent to the monitoring station.

**Convert A to 0 in identifier** – if this option is enabled, the module will convert A into 0 in the identifier of event sent to the monitoring station.

**Convert 0 to A in event** – if this option is enabled, the module will convert 0 into A in the code of event sent to the monitoring station.

**Convert A to 0 in event** – if this option is enabled, the module will convert A into 0 in the code of event sent to the monitoring station.

### Information

**Tel. line mode/status** – information about current handling of the telephone line output.

**Tel. line data** – information about the data currently being received from the device connected to the telephone line output.

## 8.10 Reporting

The module can send event codes to the monitoring station by using the following transmission paths:

- GPRS/LTE (data transmission via cellular network),
- SMS messages (module gets no acknowledgement of event code receipt),
- GSM voice channel (the use of this transmission path is not recommended because of distortions that may occur when sending the event codes),
- Ethernet network (optionally, using the GSM-X-ETH module),
- PSTN network (optionally, using the GSM-X-PSTN module).

Connecting the optional GSM-X-ETH / GSM-X-PSTN component to the module enables implementation of Dual Path Reporting in accordance with EN 50136.

*If the "Events buffering" option is not enabled, events received by the module from the control panel connected to the analog telephone line output have a priority over events generated by the module and their codes are sent to the monitoring station first.*

**Reporting** – if the option is enabled, the module can send event codes to the monitoring station. The option applies to the events received by the module from the device connected to the telephone line output and the events generated by the module.

**Reporting mode** – the way of sending event codes to the monitoring stations:

**Only Station 1** – the event codes are only sent to station 1.

**Only Station 2** – the event codes are only sent to station 2.

**Station 1 and Station 2** – the event codes are sent to both stations (the module must receive acknowledgement of the receipt of the code from both monitoring stations).

**Station 1 or Station 2** – the module will make an attempt to send the event code to station 1 and, if unsuccessful, to station 2.

**Station 2 takes over link test from station 1** – if this option is enabled when the module fails to connect to the monitoring station 1 during the link test, the module will test link to the monitoring station 2. The option can be enabled if the SIA-IP format is selected for both monitoring stations in the "IP format / protocol" field (see p. 48).

## Station 1 (ST1) / Station 2 (ST2)

**Reporting format** – the format in which event codes are sent to the monitoring station. The following formats are available: SIA, CID, AdemcoExpress, Sil.Knight/Ademco slow, Radionics 1400Hz, Radionics 1400Hz with parity. If the “Station simulation” option (p. 45) is enabled in the module, the field cannot be edited. If this is the case, information about the format selected in the “Station simulation” tab (see “Reporting format” p. 45) is displayed in the field.

**Module identifier** – a string of characters that enables the monitoring station to define from where the events are being sent. For the Contact ID format, it consists of 4 hexadecimal characters (digits or letters from A to F). For the SIA format, it consists of 6 hexadecimal characters (digits or letters from A to F).

**IP format** / **Protocol** – for reporting via cellular network or Ethernet, you must define:

- format: SATEL or SIA-IP (SIA DC-09 standard).
- protocol: TCP or UDP.

**Server 1/2 address** / **port (Ch1)/(Ch2)** – in the case of cellular network and Ethernet reporting, enter:

- address of the monitoring station. You can enter either the IP address or the domain name.
- number of the port used for communication between the module and the monitoring station during reporting. You can enter a value from 0 to 65535.

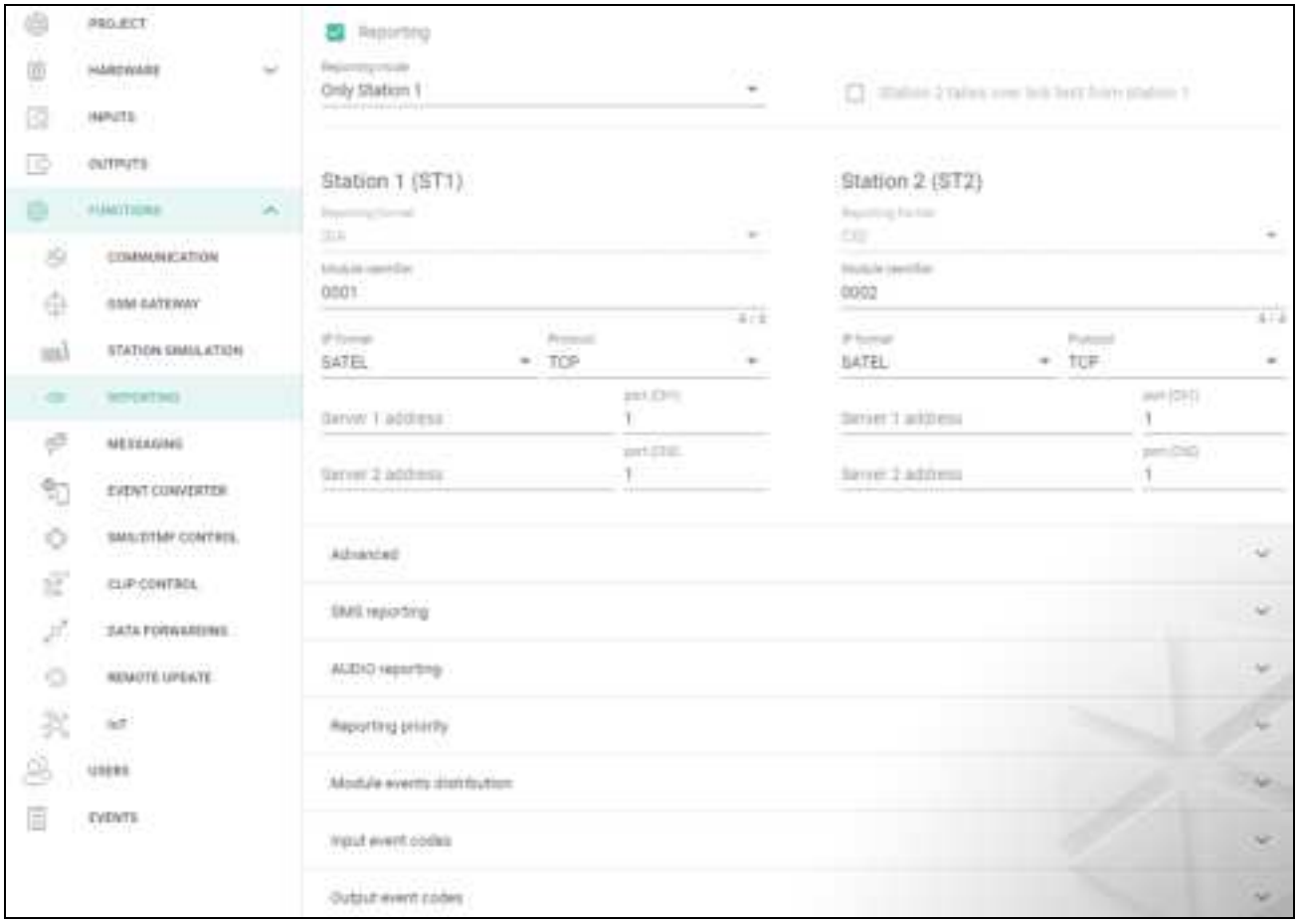


Fig. 41. “Reporting” tab.

## Advanced

**SATEL station key** – a sequence of characters for encrypting data sent in SATEL format to the monitoring station via cellular network and Ethernet. You can enter up to 12 alphanumeric characters (digits, letters and special characters). If you want to enter 24 hexadecimal characters (digits or letters from A to F), enable the “hex” option.

**ETHM/GPRS key** – a string of characters, which is used to identify the module for the purpose of cellular network and Ethernet reporting in SATEL format. You can enter up to 5 alphanumeric characters (digits, letters and special characters). If you want to enter 10 hexadecimal characters (digits or letters from A to F), enable the “hex” option.

**SIA-IP account number** – a string of characters, which is used to identify the module for the purpose of reporting in SIA-IP format. You can enter up to 16 hexadecimal characters (digits or letters from A to F).

**SIA-IP key** – a sequence of characters for encrypting data sent in the SIA-IP format. You can enter up to 16 alphanumeric characters (digits, letters and special characters). If you want to enter 32 hexadecimal characters (digits or letters from A to F), enable the “hex” option.

**Account prefix (L)** / **Receiver number (R)** – a string of characters used to identify the module for the purpose of reporting in SIA-IP format. The parameters enable you to expand the list of attributes used to identify the module. You can enter up to 6 hexadecimal characters (digits or letters from A to F).

**Both servers link test** – if this option is enabled, the module will test link to the two servers of the monitoring station. The option applies to SIA-IP format.

**Supervision every** – in the case of reporting in the SIA-IP format, an additional transmission can be sent at specified intervals to check link with the monitoring station. You can program a number of days, hours, minutes and seconds between the transmissions. Entering zeros only means that no additional transmission will be sent.

**Server 2 takes over link test from server 1** – if this option is enabled when the module fails to connect to the monitoring station server 1 during the link test, the module will test link to the server 2 (according to settings provided for testing the server 1). The option applies to SIA-IP format.

**Transmission period acc. to** – the way of setting the “Supervision every (Server 1)” and “Supervision every (Server 2)” parameters.

**DP1** / **DP2** / **DP3** / **DP4** – the parameters are set automatically, as required by the EN 50136-1 standard for Dual Path Reporting.

**OTHER** – you can set the parameters manually.

The options are available when the “Both servers link test” option is enabled.

**Supervision every (Server 1)** / **Supervision every (Server 2)** – number of days, hours, minutes and seconds between the tests of link to servers. The fields are displayed when the “Both servers link test” option is enabled.

### *SIA-IP options*

**Encrypt** – if the option is enabled, the data being sent are encrypted, and additionally the date and time are sent with event code (the monitoring station can program the date and time in the module).

**Send timestamp** – if the option is enabled, the date and time are sent with event code (the monitoring station can program the date and time in the module). The option is available, when the “Encrypt” option is disabled.

**Send MAC address** – if this option is enabled when the event codes are sent to the monitoring station over Ethernet, the MAC address is sent together with the event code.

## SMS reporting

**SMS reporting – tel. number** – phone number of the monitoring station for SMS reporting.

**SMS format** – SMS format for SMS reporting. It must be defined as required by the monitoring station. The SMS message format, preset by default in the module, corresponds to the default settings of the STAM-2 monitoring station (firmware version 1.2.0 or newer) for the Contact ID format.

*The STAM-2 station and SMET-256 converter do not support SMS messages in SIA format. The form of SMS message sent by the module in SIA format is #ID|CODE, where ID is 4- or 6-character identifier, and CODE is the received event code.*

**AUDIO reporting**

**Tel. no. 1 (Ch1)** – phone number of the monitoring station for AUDIO reporting via GSM voice channel.

**Tel. no. 2 (Ch2)** – phone number of the monitoring station for AUDIO reporting via the PSTN network. Reporting via the PSTN network is possible if the GSM-X-PSTN module is installed.

## Reporting priority

**Reporting priority** – if sending an event code to the monitoring station using one transmission path fails, the module can use another transmission path. You must specify the order of using different transmission paths by the module. A successful send of the event code to the monitoring station will terminate the procedure (except for the test transmissions if option “Send test transmissions using all paths” is enabled). For each transmission path, you can define:

**Ch1** / **Ch2** – if the option is enabled, the module will try to send the event code to the address of the given server. If you select sending to the two addresses, a successful send of event code to the first address will terminate the procedure. An exception is the test transmission if option “Send test transmissions using all paths” is enabled. In such case the module will try to send the event code to both servers.

**Timeout** – the maximum time during which the module will try to send the event code to selected addresses. If the event code is not sent during that time, the module will switch over to the next address, and then to the next path on the list.

**Suspend time** – the time for which reporting will be suspended, if attempts fail to send an event code through all provided transmission paths. The module will resume the attempt of establishing connection with the monitoring station after this time expires or a next, new event occurs. Up to 30 minutes can be programmed (by default: 1).

**Number of retries** – the number of unsuccessful retries to send the event over the given reporting path, after which the module will make an attempt to send the event over the next path. You can program from 1 to 100 (by default: 3).

*The module will only use the transmission paths for which priority is specified (they are included in the list defining the order of using transmission paths).*

*In the case of SMS reporting, the module gets no acknowledgement of receiving the event codes by the monitoring station, hence this transmission path should be used as the last one.*

*The switch-over from one SIM card to the other one requires time (for example, to log onto the network), so it is better to use up all the transmission paths available for one SIM card.*

*The switch-over from one SIM card to the other is affected by the “Lock time” and “Return time” (see “GSM” p. 34).*

**Send test transmissions using all paths** – if the option is enabled, test transmission will be sent using all paths for which priority is specified (they are included in the list defining the order of using transmission paths). If the option is disabled, a successful send of event code to the monitoring station using one of the paths will terminate the procedure.

### Module events distribution

Define which events are to be sent to the monitoring station 1 and which to the monitoring station 2. The code of a module related event will be sent to the monitoring station only when the selection box corresponding to the given event is checked. Adjust the distribution of events to the way of sending codes, selected in the "Reporting mode" field (see p. 47).

### Event codes

– click to show the table options. The options enable you to hide / show the selected columns in the table and to fit the columns to its content or to the width of the window.

For each event generated by the module, you can define codes in three formats:

**4/2** [Ademco Express, Sil.Knight/Ademco slow, Radionics 1400Hz, Radionics 1400Hz with parity] – enter 2 characters (digits or letters from A to F). The event code must be consistent with the code programmed for the event in the monitoring station.

**SIA** – enter event code consistent with SIA format by using the code editor. To open the code editor, click ...

**Contact ID** – enter event code consistent with CID format by using the code editor. To open the code editor, click ...

## 8.11 Messaging

The module can send notifications about events by means of:

- voice messages – the voice messages which are to be used for notification should be saved to the module by using the GX Soft program.
- SMS/push messages – the content of the messages which are to be used for notification should be saved to the module by using the GX Soft program.
- CLIP – the module provides information about event by calling the programmed phone numbers and hanging up automatically after maximum 15 seconds. CLIP provides toll-free messaging capability. The displayed module telephone number should be treated as a notification of event.

**Messaging** – if this option is enabled, the module can send notifications of module related events.

### Managing notifications

**Messaging priority** – if this option is enabled, when during the telephone connection of device connected to the telephone line output an event occurs which is to be notified by the module, the connection will be terminated. If this option is disabled, the messaging will only be realized when the device connected to the telephone line output completes the call.

**Messaging sounds** – if this option is enabled, the module will generate a sequence of sounds every 2 seconds during voice messaging to signal the events presented in the table below (where: dot – short sound, dash – long sound).

| Event | Tone sequence |
|---|---|
| **Input 1 violation** | • |
| **Input 1 restore** | – • |
| **Input 2 violation** | • • |
| **Input 2 restore** | – • • |
| **Input 3 violation** | • • • |
| **Input 3 restore** | – • • • |
| **Input 4 violation** | • • • • |
| **Input 4 restore** | – • • • • |
| **Input 5 violation** | • • • • • |
| **Input 5 restore** | – • • • • • |
| **Input 6 violation** | • • • • • • |
| **Input 6 restore** | – • • • • • • |
| **Input 7 violation** | • • • • • • • |
| **Input 7 restore** | – • • • • • • • |
| **Input 8 violation** | • • • • • • • • |
| **Input 8 restore** | – • • • • • • • • |
| **Output 1 ON** | • • – |
| **Output 1 OFF** | – • – |
| **Output 2 ON** | • • – – |
| **Output 2 OFF** | – • – – |
| **Output 3 ON** | • • – – – |
| **Output 3 OFF** | – • – – – |
| **Output 4 ON** | • • – – – – |
| **Output 4 OFF** | – • – – – – |
| **Telephone line trouble** | – – • |
| **Telephone line restore** | – – – |
| **Test transmission** | – – – – |
| **New external event** | – – – • |
| **Reporting trouble** | – – – – • |
| **Reporting OK** | – – – – – |
| **AC power failure** | – – – – – • |
| **End of AC power failure** | – – – – – – |
| **Battery trouble** | – – – – – – • |
| **Battery restore** | – – – – – – – |

## Managing voice messages

You can manage voice messages for the events of which the module is to inform the users.

click to open the settings window. In the window, you can select the source from which messages will be recorded or the text-to-speech converter (voice synthesizer) installed on the computer that will be used for text processing.

*You can download the Microsoft Speech Platform 11 from the www.microsoft.com website. Installation of the following files is required:*

- *SpeechPlatformRuntime.msi,*
- *MSSpeech_TTS_xx-XX_yyyy.msi (where xx-XX is language, and yyyy is voice).*

*The voice message saved to the module cannot be longer than 6,82 seconds.*

click to read the voice messages from the module.

click to save the voice messages to the module.

click to play back the selected voice message / convert the message text into a voice message.

click to record the voice message.

click to stop recording / playback of the selected message.

click to import the .WAV file to be used as the voice message for the selected event.

click to delete the selected voice message.

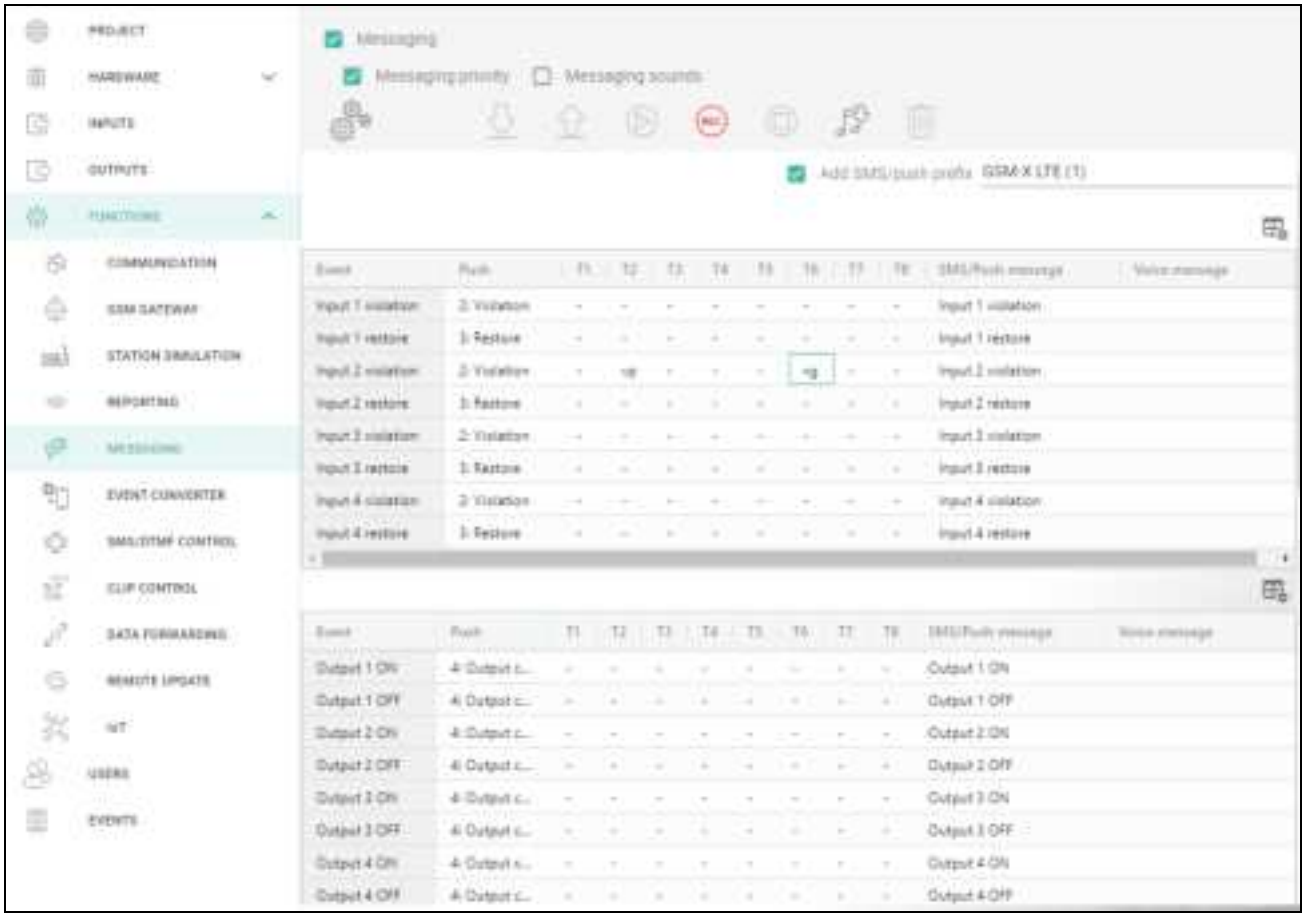


Fig. 42. “Messaging” tab.

## SMS prefix

**Add SMS/push prefix** – if this option is enabled, you can define in the adjacent field a prefix to precede the body of each message sent by the module in the SMS/push notification. The prefix can contain up to 32 characters (digits, letters and special characters).

## Module events

**Test transmission with module status** – if this option is enabled, module status information is sent in SMS message to notify of the “Test transmission” event.

## Event assignment

– click to show the table options. The options enable you to hide / show the selected columns in the table and to fit the columns to its content or to the width of the window.

**Event** – event description.

**Push** – event category. You can assign the event to one of the following categories: 1: Alarm / 2: Violation / 3: Restore / 4: Output control / 5: Input bypass / 6: Diagnostics / 7: Other / 8: Push to all. If you assign 0: Disabled to the event, the module will not send push notifications about this event. Click on the field and enter a digit from 0 to 8 or select the category from the list.

**T1…T8** – you can select a messaging method for the given telephone (see “Users” p. 65):

**0: -** – no notification,

**1: SMS** – event notification using SMS [s],

**2: CLIP** – event notification using CLIP [c],

**3: Voice message (GSM)** – event voice notification via cellular network [vg],

**4: SMS, CLIP** – event notification using SMS and CLIP [sc],

**5: Voice message (PSTN)** – event voice notification via PSTN [vp].

Click on the field and enter a digit from 0 to 5 or select the messaging method from the list.

**SMS/Push message** – content of the SMS/push message. The message may contain up to 32 characters.

**Voice message** – content of the voice message. In order to convert it into the voice message, click . See also “Managing voice messages”.

## CLIP messaging

– click to show the table options. The options enable you to hide / show the selected columns in the table and to fit the columns to its content or to the width of the window.

**User** – user name (see “Users” p. 65).

**Attempts** – the number of attempts to send notification by means of CLIP to the given user telephone (see “Users” p. 65). You can enter from 0 to 15 (by default: 3).

*If the “Confirmation” option is disabled, the module will make just one call, regardless of the programmed number of attempts.*

**Confirmation – CLIP** – if this option is enabled, receipt of the CLIP message by the given user is to be acknowledged. In order to acknowledge receiving the message, the connection with module must be rejected not earlier than 10 seconds and not later than 20 seconds since the telephone ring is heard. Acknowledgement of receiving the CLIP messaging will make the module stop repeating it.

**Confirmation – voice (DTMF)** – 4-digit code used in order to acknowledge receiving a voice message. The user can acknowledge receiving a message by entering the code on the telephone keypad after the message has been played back. Acknowledgement of receiving the voice message will make the module stop repeating it.

**SMS** – if this option is enabled, failure to receive the acknowledgement of CLIP messaging will result in sending to the given user telephone number of an SMS message with content entered for this event.

***Clear messaging after confirmation***

It is possible to disable sending CLIP / voice notifications to the rest of users after the user has acknowledged receiving the message. Select the telephone numbers which will not be notified after the user has acknowledged receiving the message.

## 8.12 Event converter

The module can notify the users of events received from the control panel. Notifications can be realized via:

- SMS/push messages – the text of messages to be used for notification must be programmed.
- CLIP – the module will inform the users of the event by calling the programmed phone numbers and disconnecting automatically after maximum 15 seconds. CLIP offers toll-free notification. The displayed module telephone number is to be treated as event notification.

You can indicate 32 events of which the module will notify the users.

**Event converter** – if this option is enabled, the module can notify the users of the events received from the control panel.

**Add event details to SMS** – if this option is enabled, the number of partition where the event occurred and the number of user or the number of zone that caused the event will be automatically added to the SMS message sent by the module after receiving the event code. The option only applies to event codes in Contact ID format.

– click to show the table options. The options enable you to hide / show the selected columns in the table and to fit the columns to its content or to the width of the window.

**Ident.** – identifier that must precede the event code so that the module can send notification of the event. For 4/2 or Contact ID format, you can enter 4 characters (digits or letters from A to F). For SIA format, you can enter 6 characters. If you program no identifier, regardless of what kind of identifier is to precede the event code, receiving it will result in sending the message.

**Format** – format in which the event code must be received so that the module can send notification of the event. You can select: 1: 4/2, 2: CID or 3: SIA. Click on the field and enter a digit from 1 to 3 or select the format from the list.

**CODE** – event code, after receiving of which notification of the event will be sent. For 4/2 format, enter 2 characters (digits or letters from A to F). For Contact ID or SIA format, you can use the code editor. To open the code editor window, click ... in the “Event” field.

**EVENT** – event description. The field refers to SIA and Contact ID formats. It is autocompleted after entering the event code into the “CODE” field.

**Z/M/U** – number of zone / module / user that must be included in the received code so that the module can send notification of the event. The field applies to SIA and Contact ID formats.

**R** – the option applies to Contact ID format. If it is enabled, the received event code refers to event restore / arming. If it is disabled, the received event code refers to a new event.

**Push** – event category. You can assign the event to one of the following categories: 1: Alarm / 2: Violation / 3: Restore / 4: Output control / 5: Input bypass / 6: Diagnostics / 7: Other / 8: Push to all. If you assign 0: Disabled to the event, the module will not send push notifications about this event. Click on the field and enter a digit from 0 to 8 or select the category from the list.

**T1...T8** – you can select a messaging method for the given telephone (see “Users” p. 65):

**0: -** – no notification,

**1: SMS** – event notification using SMS [s],

**2: CLIP** – event notification using CLIP [c],

**3: SMS, CLIP** – event notification using SMS and CLIP [sc].

Click on the field and enter a digit from 0 to 3 or select the messaging method from the list.

**SMS/Push message** – the contents of SMS message which will be sent after receiving the selected event code. The message may be composed of up to 32 characters.

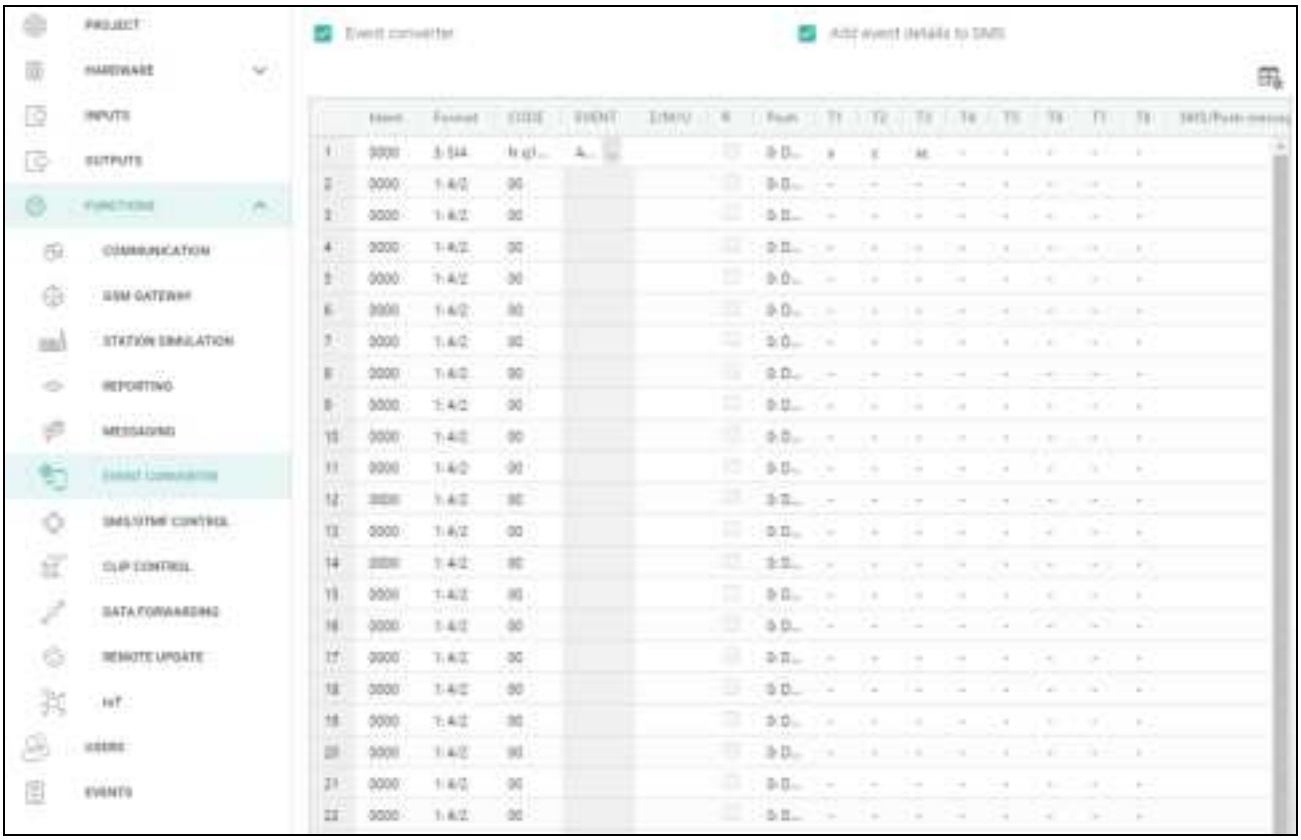


Fig. 43. “Event converter” tab.

## 8.13 SMS/DTMF control

You can control the module via SMS messages containing appropriate control commands as well as by using keypad of the telephone (DTMF codes) from which connection to the module was established. The SMS messages must be sent to the number of the SIM card currently in use.

**Local control tel. number** – code triggering the DTMF local control function. You can enter up to 16 digits. Entering the code from the keypad of telephone connected to the telephone line output will allow you to control the module (see p. 69).

**Confirm SMS control** – if this option is enabled, after receiving an SMS message with control command, the module will confirm the receipt by sending a return SMS message with the module status.

– click to show the table options. The options enable you to hide / show the selected columns in the table and to fit the columns to its content or to the width of the window.

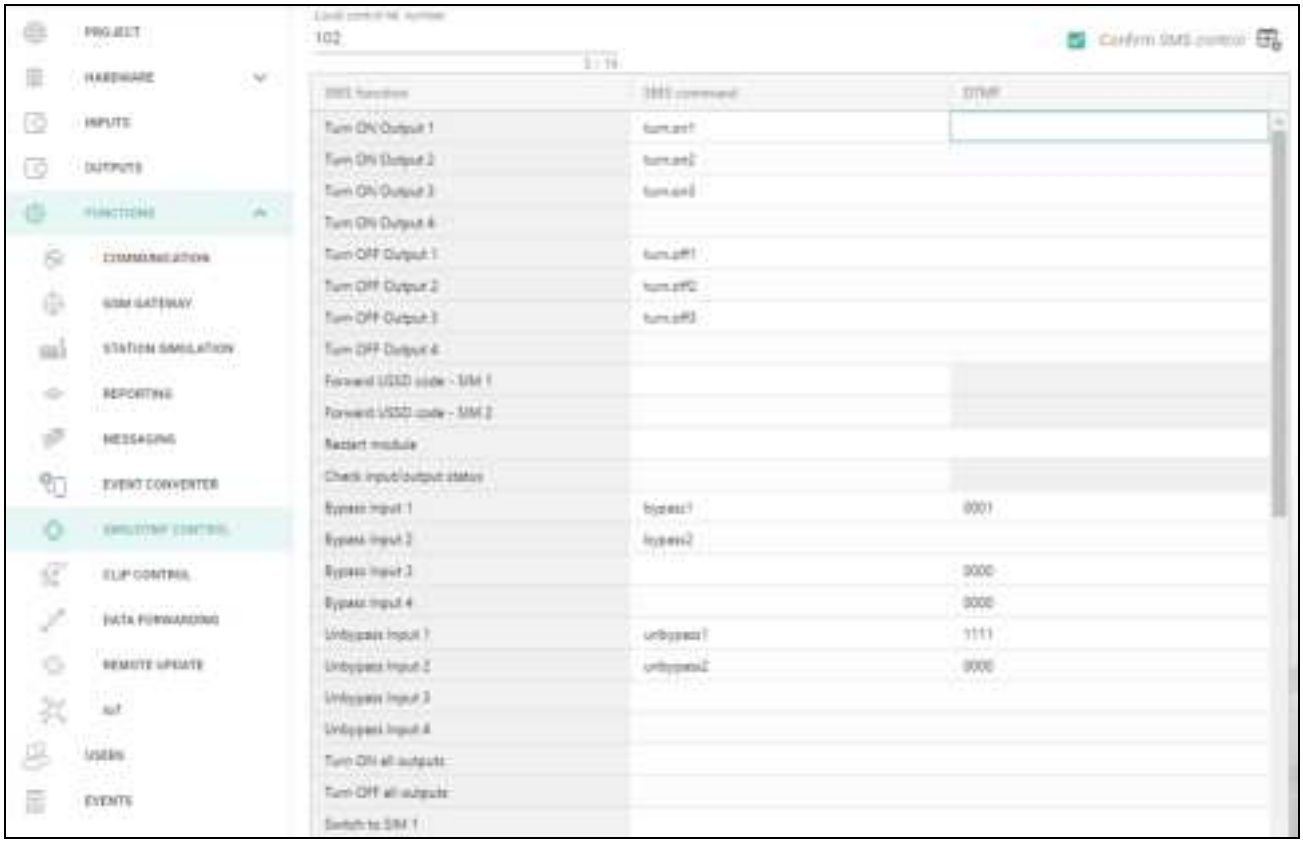


Fig. 44. “SMS/DTMF Control” tab.

**SMS function** – function run on receiving the control command / code.

**SMS command** – the control command which, if sent in the SMS message, will run the function assigned to the command. You can enter up to 16 alphanumeric characters except spaces (digits, letters and special characters). For some functions, the SMS message sent must have a specified form:

**Forward USSD code – SIM 1/SIM 2** – allows you e.g. to check the account balance of SIM card installed in the module. The SMS message sent to the module must have the following form: “**xxxxxx=yyyy.**” or “**xxxxxx=yyyy=**”, where: “xxxxxx” – control command, “yyyy” – USSD code supported by the cellular network operator. The module will use the USSD code contained in the command and will send the reply received from the operator to the telephone number from which the control command was sent.

**Change test transmission period** – allows you to program the interval after which a test transmission will be sent. The SMS message sent to the module must have the following form: “**xxxxxx=M=**” or “**xxxxxx=H:M=**”, where: “xxxxxx” – control command, “M” – number of minutes after which the transmission will always be sent, “H:M” – hour and minute when the transmission will be sent once a day (enter Greenwich Mean Time (GMT)).

**Change user 1…8 tel** – allows you to program the number of telephone user. The SMS message sent to the module must have the following form: “**xxxxxx=yyyy.**” or “**xxxxxx=yyyy=**”, where: “xxxxxx” – control command, “yyyy” – new number of telephone user. It is recommended that the telephone number be preceded by the country code.

*The content of control commands must vary.*

*The content of one control command must not be inserted into the content of another command.*

*It is not advisable to use the advanced functions available due to the USSD service if menu is presented in response to the entered code.*

*The control command for sending USSD codes can be used for sending SMS messages through the module. The SMS message sent to the module must have the following form: "**xxxxxx=telephone:text=**", where "xxxxxx" – control command, "telephone" – telephone number to which the SMS message will be sent by the module, "text" – content of the message.*

**DTMF** – control code that can be entered after establishing connection to the module from telephone keypad to run the selected function. The code must contain 4 digits.

*When being sent, the DTMF tones may get corrupted, thus impeding control.*

*Construction of some telephones requires activation of the DTMF control function.*

## 8.14 CLIP control

You can control the module outputs by using the CLIP service.

### Any telephone

You can program how the module outputs are to be controlled by using the CLIP service from any phone number.

*The numbers from the "Additional telephone numbers" list and the users' telephone numbers are not treated by the module as any telephone numbers.*

### Users

You can program how the module outputs are to be controlled by using the CLIP from the users' telephones (see "Users" p. 65).

### Additional telephone numbers

You can program how the module outputs are to be controlled by using the CLIP from additional phone numbers.

The search field is displayed above the table. If you want to find a telephone number:

1. Click on the search field and enter a string of characters included in the telephone number or its description.
2. Click . The telephone numbers that meet the search criteria will be displayed.

*If you want to display all telephone numbers, click × in the search field (this will clear all the characters entered in the field).*

You can sort the data in the table. If you click on the selected column header (e.g. "Telephone number"), the table will be sorted by the data in that column. The symbol indicating the current sorting method (↑ – ascending, ↓ - descending) will be displayed in the column header.

– click to import telephone numbers from file.

– click to export telephone numbers to file.

– click to delete the selected telephone numbers.

– click to show the table options. The options enable you to hide / show the selected columns in the table and to fit the columns to its content or to the width of the window.

**Telephone number** – you can program 64 phone numbers to control the outputs by using CLIP. You can program the whole telephone number (including the country code) or only part of it. Up to five characters (consecutive digits from any part of the number, including "+") can be treated as part of the number. Six and more characters will be interpreted by the module as the whole telephone number.

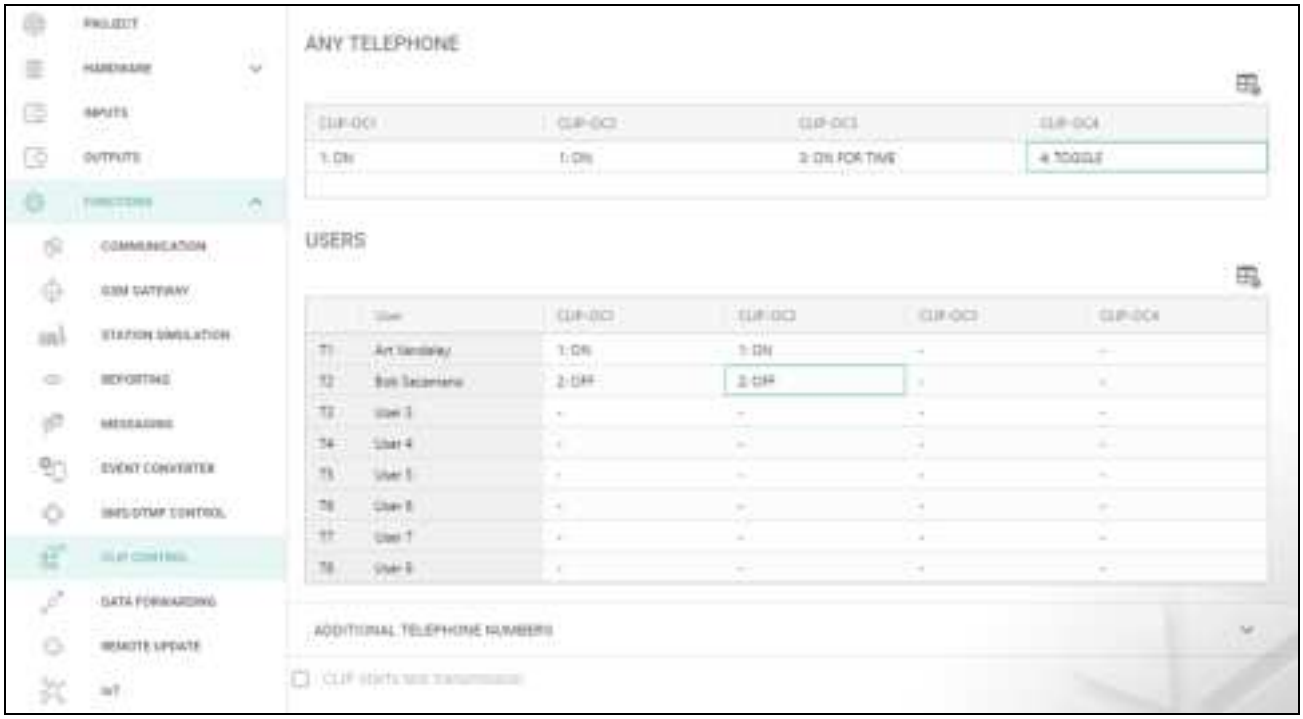


Fig. 45. “CLIP control” tab.

**Description** – you can enter description of the given telephone number. The description may contain up to 32 characters (digits, letters and special characters). The description is not saved to the module.

### Output control

**CLIP-OC1…OC4** – the output can respond to CLIP in one of the following ways:

**0:-** – CLIP does not control the output.

**1: ON** – CLIP will turn on the output.

**2: OFF** – CLIP will turn off the output.

**3: ON FOR TIME** – CLIP will turn on the output for a specified period of time (see “Operating time” parameter p. 38).

**4: TOGGLE** – CLIP will switch the output to its opposite status.

If several different responses to CLIP from one telephone number are programmed for the given output (e.g. OC1) (when the number or part of it is programmed in two or more rows of the table), then in response to CLIP from that number the output will be switched over successively to each of the programmed statuses. The switching sequence will correspond to the consecutive numbers from the telephone list.

**CLIP starts test transmission** – information about additional reaction of the module to CLIP. If the option is enabled, a test transmission will be additionally started by the module in response to CLIP. You can enable/disable this option in the “Mainboard” tab (see “CLIP starts test transmission” p. 34).

## 8.15 Data forwarding

The module can make connections between the INTEGRA / INTEGRA Plus control panel (connected to the module through RS-232 port) and the computer with GUARDX or DLOADX program installed.

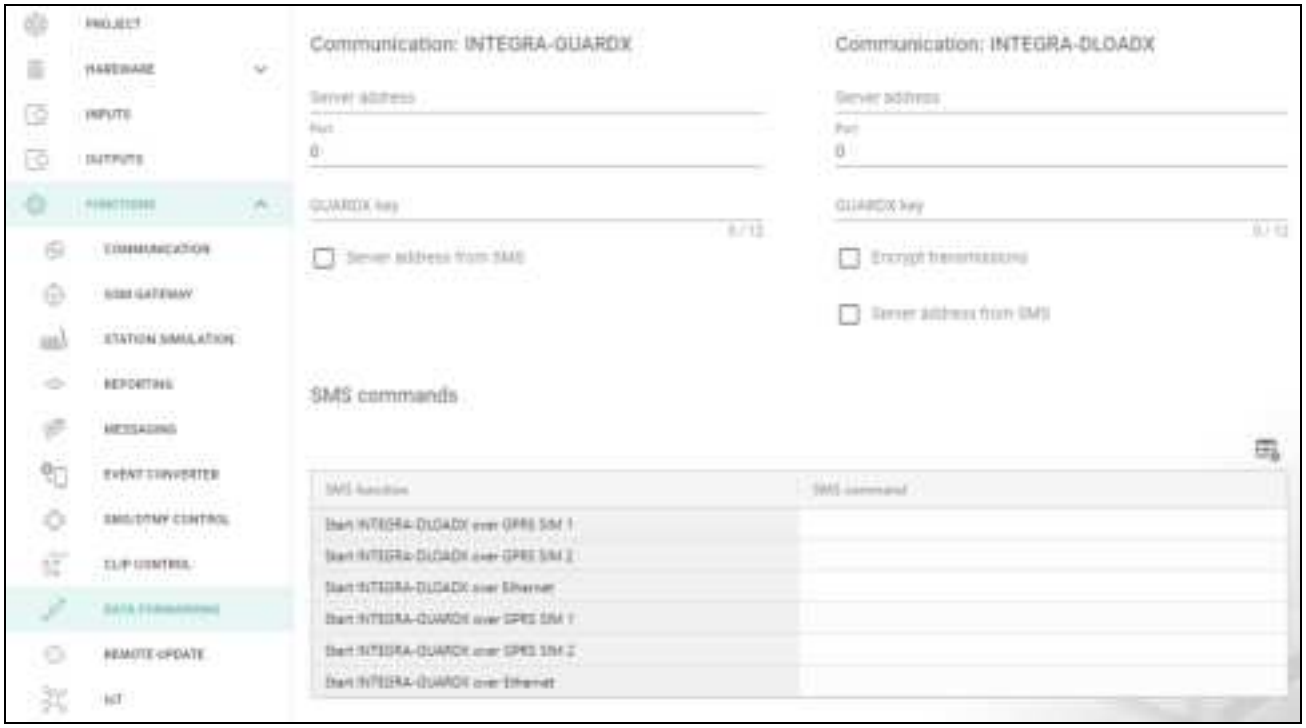


Fig. 46. “Data forwarding” tab.

## Communication: INTEGRA – GUARDX

**Server address** – the address of the computer with the GUARDX program, with which the module (connected to the INTEGRA / INTEGRA Plus control panel through RS-232 port) is to communicate using the TCP/IP communication protocol (cellular network or Ethernet). You can enter the IP address or domain name.

**Port** – the number of port on which the communication with the GUARDX program will take place.

**GUARDX key** – the string of 12 alphanumeric characters (digits, letters and special characters) used for data encryption during communication with GUARDX program. The module will only establish connection to the program using the correct key.

**Server address from SMS** – if this option is enabled, the address of computer with GUARDX program and the port number can be entered in the SMS message that initiates the connection. If the message contains no address or port number, the module will use the preprogrammed settings.

## Communication: INTEGRA – DLOADX

**Server address** – the address of the computer with the DLOADX program, with which the module (connected to the INTEGRA / INTEGRA Plus control panel through RS-232 port) is to communicate using the TCP/IP communication protocol (cellular network or Ethernet). You can enter the IP address or domain name.

**Port** – the number of port on which the communication with the DLOADX program will take place.

**DLOADX key** – the string of 12 alphanumeric characters (digits, letters and special characters) used for data encryption during communication with DLOADX program. The module will only establish connection to the program using the correct key.

**Encrypt transmissions** – if this option is enabled, the data transfer between module and program will be encrypted. The option must be enabled.

**Server address from SMS** – if this option is enabled, the address of computer with DLOADX program and the port number can be entered in the SMS message that initiates the connection. If the message contains no address or port number, the module will use the preprogrammed settings.

### SMS commands

– click to show the table options. The options enable you to hide / show the selected columns in the table and to fit the columns to its content or to the width of the window.

**SMS function** – function run after receiving the control command. The functions are used to establish communication between the INTEGRA / INTEGRA Plus control panel and the DLOADX / GUARDX program via the module.

**SMS command** – the control command which, if sent in the SMS message, will initiate communication with the GUARDX / DLOADX program by using the TCP/IP communication protocol (cellular network or Ethernet). You can enter up to 16 alphanumeric characters except spaces (digits, letters and special characters).

*The content of control commands must vary.*

*The content of one control command must not be inserted into the content of another command.*

*You can include in the SMS message the address of computer the module is to connect to, and the number of TCP port to be used for communication.*

## 8.16 Remote update

Remote update of the module firmware is made possible by the “UpServ” update server, which is included in the SATEL product portfolio.

### UpServ

**Update server** – address of the “UpServ” update server. You can enter the IP address or domain name.

**Port** – number of the TCP port used for communication with the “UpServ” update server. You can enter values from 0 to 65535 (0=disabled).

**Check for update** – you can define every how many days the module will check for a new firmware version. You can enter from 0 to 31. If you enter 0, checking will be disabled.

**Download update over** – you can select the channel that will be used to download updates from the server:

**GPRS** – cellular network.

**GSM-X-ETH/GPRS** – Ethernet network or cellular network. Ethernet has priority. Cellular network will be used if there is no communication over the Ethernet network.

**GSM-X-ETH** – Ethernet network.

If you do not select the channel, you will only be able to update the module firmware locally (see: “Local update” p. 74). Communication via the Ethernet network is possible if the GSM-X-ETH module is installed.

– click to start remote firmware update.

**Update server address in SMS** – if this option is enabled, you can enter server address and port number in the SMS message initiating the firmware download from the update server. If the message contains no address or port number, the module will use the preprogrammed settings.

**Check for update after restart** – if this option is enabled, the module will connect to the update server after each restart and check if a new firmware version is available.

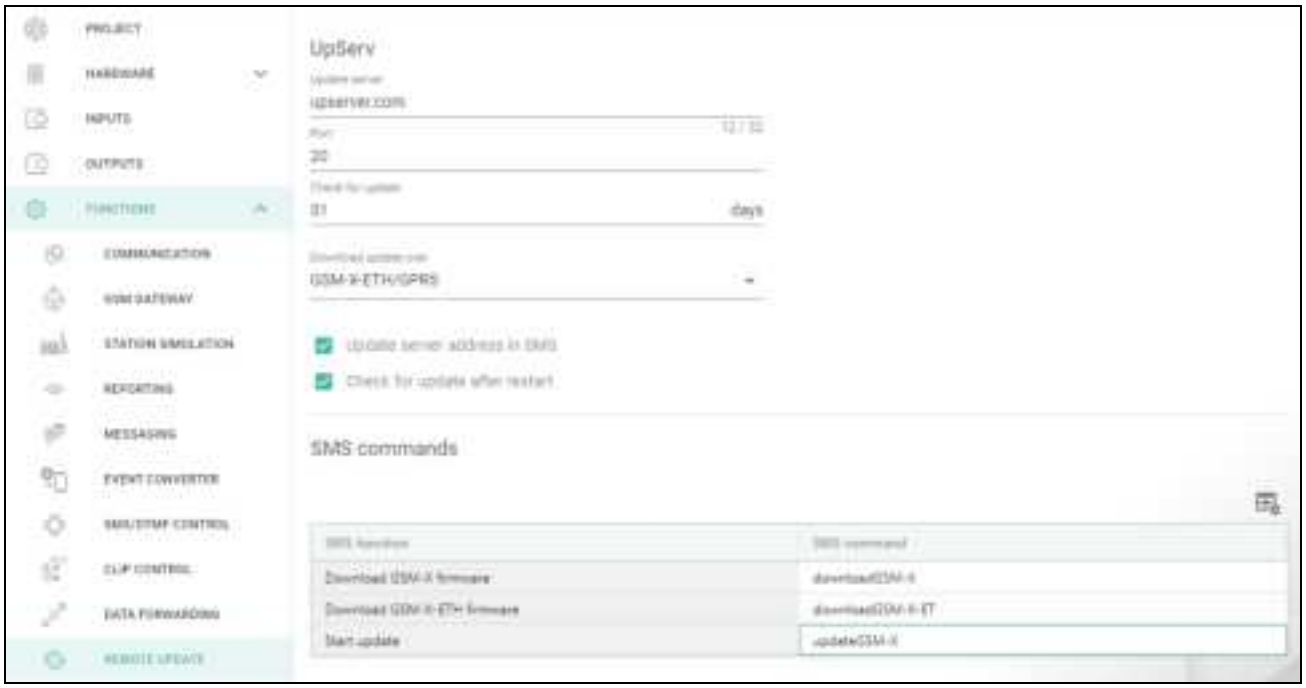


Fig. 47. “Remote update” tab.

### SMS commands

– click to show the table options. The options enable you to hide / show the selected columns in the table and to fit the columns to its content or to the width of the window.

**SMS function** – function run after control command is received. The functions are used for remote update of the module.

**SMS command** – the control command which, if sent in the SMS message, will start the function. You can enter up to 16 alphanumeric characters except spaces (digits, letters and special characters).

*The content of control commands must vary.*

*The content of one control command must not be inserted into the content of another command.*

*If you program the command initiating firmware download without programming the command that initiates update of the firmware, the update will start automatically after the download is completed.*

## 8.17 IoT

The module can work as part of the Internet of Things (IoT). This enables the module to be integrated with other systems (including automation or measurement data acquisition) to transfer the module registered data to them and receive from them the control commands for the module. Cellular network is used for communication.

**IoT** – if the option is enabled, the module can communicate with the IoT devices.

**Channel** – information about the channel used for communication.

**Protocol** – protocol used for communication. You can select: MQTT, JSON. For more information see section “Appendix” p. 75.

**Server** – address of the server to which the module is to connect when working as part of the Internet of Things. You can enter IP address or domain name.

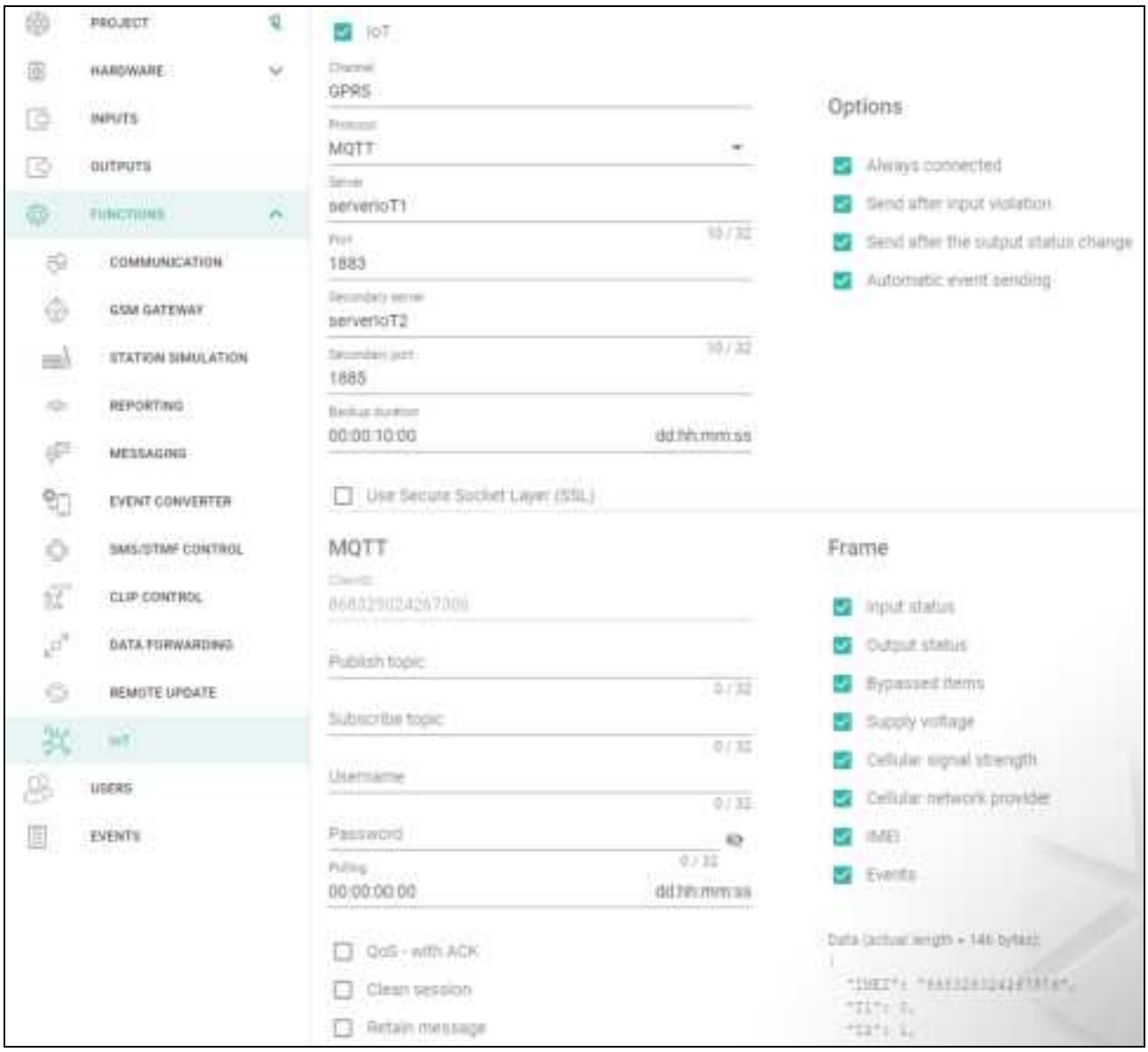


Fig. 48. “IoT” tab.

**Port** – number of TCP port used for communication with the server. You can enter values from 1 to 65535.

*For the MQTT protocol, you can set the secondary server address. In case of a failure to send data to the primary server, the module will try to send data to the secondary server. If the module fails to connect to the secondary server, it will try again to send data to the primary server.*

**Secondary server** – address of the server to be used as backup in case of a failure to send data to the primary server. The module will then try to connect to the secondary server. This field applies to the MQTT protocol.

**Secondary port** – number of TCP port used for communication with the secondary server. You can enter values from 1 to 65535. This field applies to the MQTT protocol.

**Time of using the backup channel** – time for which the module will stay connected to the secondary server. After this time, the module will try again to connect to the primary server. If you set 0, the module will switch to the primary server only when it fails to send data to the secondary server. This field applies to the MQTT protocol.

**Use Secure Socket Layer (SSL)** – if this option is enabled, communication with the server will be encrypted. If communication on the server side is not encrypted, the option should be disabled.

### MQTT

Define parameters of communication with the server for the MQTT communication protocol.

### JSON

Define every how many days, hours, minutes and seconds the module is to send data to the server for the JSON communication protocol.

### Options

**Always connected** – if this option is enabled, the module, after sending the data, will maintain connection to the server until the next transmission. If the option is disabled, the module, after sending the data, will wait a few seconds for the server to respond and will terminate the connection. Connection to the server will then be established during the next transmission. The time between subsequent transmissions is defined in the "Polling" field.

**Send after input violation** – if this option is enabled, input violation will start data transmission.

**Send after the output status change** – if this option is enabled, changing the output status will start data transmission.

**Automatic event sending** – if this option is enabled, data transmission will be started each time an event occurs in the module or each time the module receives an event from the control panel.

*Each data transmission will reset the countdown before sending the next cyclic data transmission ("Polling" field).*

### Frame

You can define the type of data the frame sent by the module will contain (see "Format of the frame sent by the module" p. 75).

**Input status** – if this option is enabled, the frame will contain information about the status of inputs.

**Output status** – if this option is enabled, the frame will contain information about the status of outputs.

**Bypassed items** – if this option is enabled, the frame will contain information about bypassed inputs.

**Supply voltage** – if this option is enabled, the frame will contain information about the module supply voltage.

**Cellular signal strength** – if this option is enabled, the frame will contain information about the strength of radio signal received by the module.

**Cellular network provider** – if this option is enabled, the frame will contain the symbol of selected cellular network operator.

**IMEI** – if this option is enabled, the frame will contain the identification number of the module cellular communicator.

**Events** – if this option is enabled, the frame will contain the index of the event last saved to module memory (EV) and the maximum event index (MEV).

*Enabling / disabling the option will update the data displayed in the "Data" field.*

**Data (actual length = [number] bytes)** – information about the type of data that will be contained in the frame sent by the module (see “Format of the frame sent by the module” p. 75). Information about the current size of the frame is displayed above the field.

## 8.18 Users

You can enter data of 8 users. It will be possible to control the module from the user telephone number by using SMS messages, DTMF codes (see p. 56), CLIP (see p. 58) and through the GX Control application (see p. 66). At the same time, the module can send notifications (SMS, CLIP and AUDIO) of the events (see p. 51) to the user telephone number.

– click to show the table options. The options enable you to hide / show the selected columns in the table and to fit the columns to its content or to the width of the window.

**User** – individual name of the user (up to 16 characters).

**Telephone number** – the user telephone number. You can program the whole telephone number (including the country code) or only part of it. Up to five characters (consecutive digits from any part of the number, including “+”) can be treated as part of the number. Six and more characters will be interpreted by the module as the whole telephone number.

**Forward SMS** – if this option is enabled, unknown SMS messages received by the module are forwarded to the user phone number (e.g. information received from the cellular network operator).

Fig. 49. “Users” tab.

## 8.19 Events

Up to 500 events generated by the module or received from the control panel can be recorded in the module non-volatile memory.

The search field is displayed above the table. If you want to find an event:

1. Click on the search field and enter a string of characters contained in the event details (e.g. the event description or date of its occurrence).
2. Click . Events that meet the search criteria will be displayed.

*If you want to go back to all events, click × in the search field (this will clear all the characters entered in the field).*

– click to clear the module event log.

– click to refresh the list of events.

– click to show the table options. The options enable you to hide / show the selected columns in the table and to fit the columns to its content or to the width of the window.

You can sort the data in the table. If you click on the selected column header (e.g. “Date”), the table will be sorted by the data in that column. The symbol indicating the current sorting method (↑ – ascending, ↓ - descending) will be displayed in the column header.

Events are shown sorted by time in descending order (the latest UP, the oldest DOWN). Individual columns present the following information:

**No.** – consecutive event number.

**Date** – date the event occurred in the module / event from the control panel was saved to the module memory (see “Events buffering” p. 45).

**Time** – hour the event occurred in the module / event from the control panel was saved to the module memory (see “Events buffering” p. 45).

**Description** – event description (for events in Contact ID or SIA format).

**Source** – name of source that generated the event.

**Station 1** / **Station 2** – reporting status:

**[blank field]** – event is not reported,

**.** – event waiting to be sent to the monitoring station,

**+** – test transmission sent to the monitoring station,

**-** – sending test transmission has failed,

***** – sending event cancelled (e.g. reporting has been disabled),

**[name of reporting path]** – event sent successfully to the monitoring station using the given transmission path.

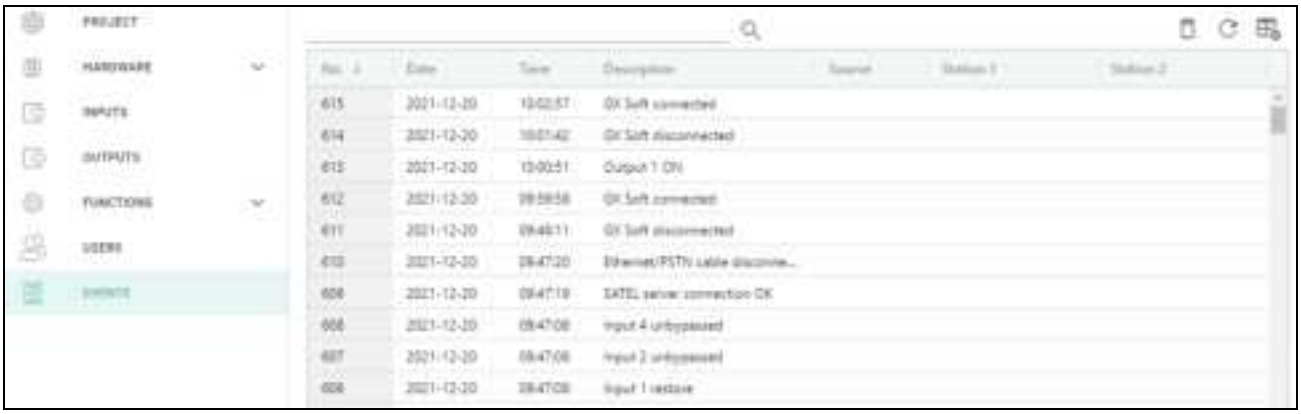


Fig. 50. “Events” tab.

# 9. GX Control application

The GX Control is a mobile application that allows you to remotely operate the GSM-X LTE module i.e.:

- check the status of inputs and outputs,
- bypass / unbypass the inputs,
- control the outputs,
- view the troubles,
- view the event log.

Additionally, the application can provide information on the events by using push notifications.

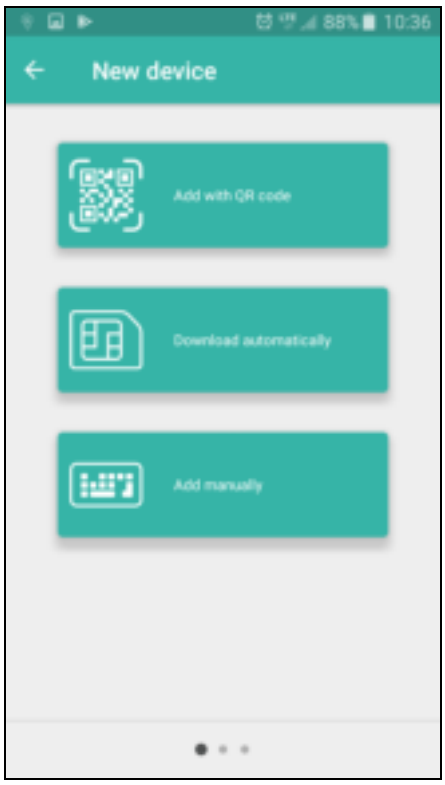


Fig. 51. GX Control application (Android system): select how to configure the settings for a new module.

Communication between the application and the module is encrypted.

*Number of the telephone with GX Control application must be programmed in the module in the list of users' telephones (see "Users" p. 65).*

You can download the application from the internet stores: "Google play" (Android system devices) or "App Store" (iOS system devices).

When the application is run for the first time, a prompt is displayed asking you whether access to the application is to be password protected. After you define the application access rules, a tutorial will be displayed to prompt you what to do to configure settings for communication with the module. Fig. 51 shows the GX Control screen that allows you to select how the communication settings are to be configured.

## Add with QR code

Pressing the button will start the QR code scanner to enable communication settings to be read from the QR code (see p. 31).

If the communication settings are configured on one mobile device, they can be easily copied to another mobile device. Just display the QR code on the device in which the settings for communication with the given module are already configured, and read the code on another device.

Fig. 52. GX Control application (Android system): manual configuration of new module settings.

### Download automatically

Pressing the button will display a window in which you are to enter the cellular number of a new module. Communication settings will be downloaded automatically from the module.

### Add manually

Tap the button to display a window (Fig. 52), in which you must:

- enter the module name (to enable identification of the module when using the application),
- enter the IMEI number of the module cellular communicator (the individual identification number of the cellular communicator),
- enter the module ID number (the individual identification number for the purpose of communication via the SATEL server – see “Project” p. 30),
- enter the user phone number (number programmed in the module – see “Users” p. 65),
- select the icon (to facilitate identification of the module when using the application).

# 10. Control by using a telephone

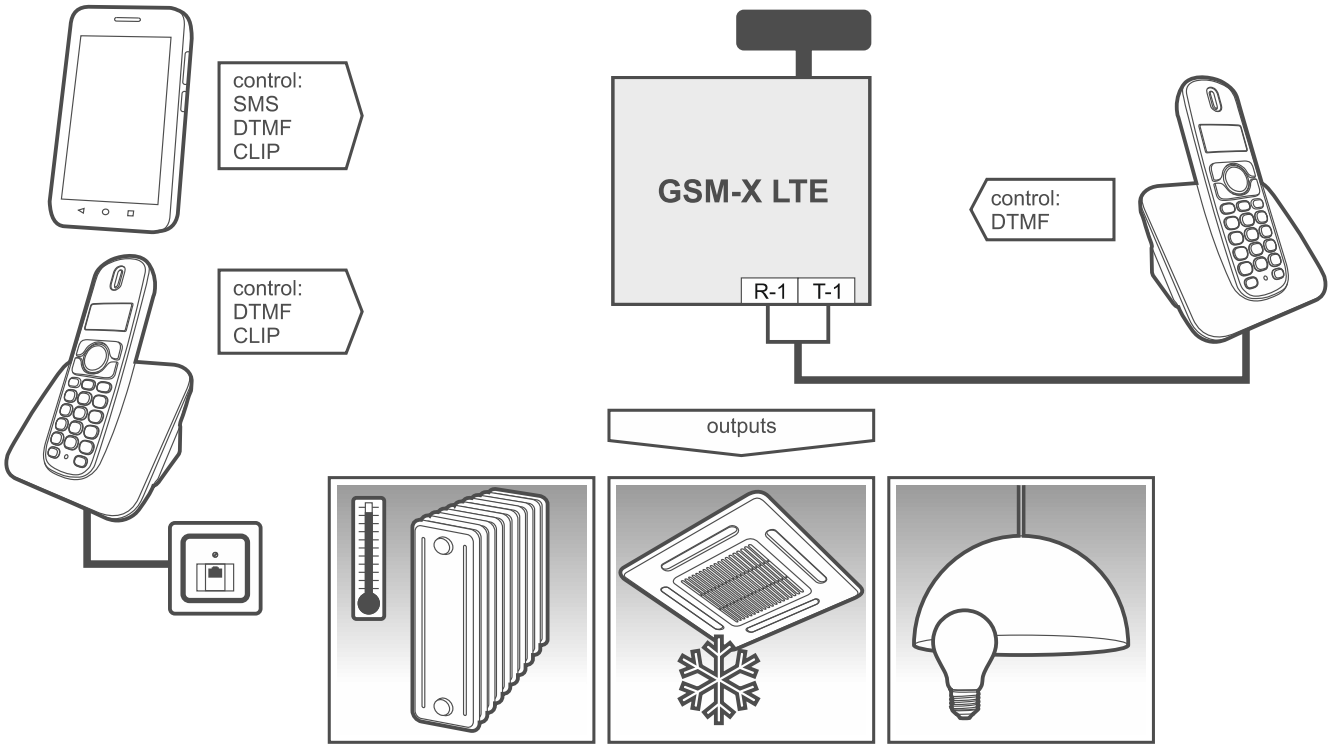


Fig. 53. Control of the module and devices connected to the module outputs.

## 10.1 Control from the telephone connected to output telephone line

### Required settings

- Program the code starting local control of the module (up to 16 digits, see “Local control tel. number” p. 56).
- Program the DTMF control codes for individual control functions (see “DTMF” p. 58).

### Control

1. Pick up the receiver and use the telephone keypad to enter the code starting the local module control. The module will generate 2 short beeps to confirm correctness of the code.
2. Enter the control code from the telephone keypad.
3. If the function starts, you will hear 2 short beeps. If the function does not start, you will hear 1 long beep.
4. Repeat the step 2 if the control is to be continued.
5. Hang up to end the control.

## 10.2 Control from other telephones

### 10.2.1 From the keypad

### Required settings

- Program the “Ringing time” parameter (p. 32).
- Program the control commands (see “SMS/DTMF control” p. 56).

- If the control availability is to be limited to the telephones whose numbers:
  - have been programmed in the module for users (see “Users” p. 65) – enable the “Users tel. numbers” option (p. 33);
  - are on the list of allowed numbers (see “Allowed tel. numbers” p. 45) – enable the “Allowed tel. numbers (GSM Gateway)” option (p. 33).

### Control

1. Call the cellular module telephone number.
2. After hearing 2 short beeps, enter the 4-digit control code.
3. If the function starts, you will hear 2 short beeps. If the function does not start, you will hear 1 long beep.

*If you make a mistake when entering the control code, press the [*] or [#] key and re-enter the code. Entering a wrong code three times will result in loss of connection with the module.*

4. Enter the next control codes or terminate the connection.

## 10.2.2 Using SMS

### Required settings

- Program the control commands (see section “SMS/DTMF control” p. 56).
- If the control availability is to be limited to the telephones whose numbers:
  - have been programmed in the module for users (see “Users” p. 65) – enable the “Users tel. numbers” option (p. 33);
  - are on the list of allowed numbers (see “Allowed tel. numbers” p. 45) – enable the “Allowed tel. numbers (GSM Gateway)” option (p. 33).
- If module is to confirm execution of the control command by means of SMS message, program SMS center number (see “SMS center number” p. 34) and enable the “Confirm SMS control” option (p. 56).

### Control

1. Send the SMS message containing a control command to the module cellular number.

*The control command may be just a fragment of the SMS message, but it must be among the first 32 characters. This makes it is possible to write the control command, including the comments, to the telephone memory and send the whole to the module.*

*Several control commands may be included in one SMS message (should be separated by spaces).*

2. If the “Confirm SMS control” option (p. 56) is enabled, after execution of the command the module will send an SMS message with the information on module status:

   “OT=????, IN=????, LT=?, SIG=?, ??:?? / ??d??h??m, T1=??, T2=??, T3=??, T4=??, T5=??, T6=??, T7=??, T8=??,”

   where:

   OT – information on output status [o – output OFF; O – output ON].

   IN – information on input status [i or t – input in normal status; I or T – input violated; b – input bypassed].

   LT – information on telephone line status [ok – the telephone line OK; ?? – telephone line trouble].

   SIG – actual level of signal received by antenna [digits from 0 to 4].

??:?? / ??d??h??m – information on every how many days, hours and minutes the module sends the test transmission [once a day at e.g. 15:10 / number of days (d), hours (h) and minutes (m)].

T1…T8 – information on the user telephone numbers programmed in the module.

### 10.2.3 Using CLIP

Using the CLIP you can only control the status of outputs.

#### Required settings

- Program the “Ringing time” parameter (p. 32).
- Enter the telephone numbers from which control of the outputs will be possible by means of CLIP (see section “CLIP control” p. 58).
- Define from which telephone numbers and how the outputs are to be controlled by CLIP (see “CLIP-OC1…OC4” p. 59).

#### Control

Call the module cellular number and hang up after hearing the ring signal. The module will change the output status. If the “Send SMS with module status on CLIP” option (p. 34) is enabled in the module, the module will send an SMS with module status information to your telephone number.

## 11. Reporting events when the module is used with INTEGRA / INTEGRA Plus

If the INTEGRA / INTEGRA Plus control panel is to report events via the GSM-X LTE module:

1. RS-232 ports of the control panel and the GSM-X LTE module must be connected together.
2. Enable the following options in the control panel:
   **Reporting - GPRS**,
   **Answering - modem**,
   **Tone dialing**,
   **No dial tone test**,
   **No answer test**,
   **External modem**,
   **Modem ISDN/GSM/ETHM**.
3. Configure the following reporting parameters in the control panel:
   **Reporting format**,
   **Server** – enter: gsm-x,
   **Identifiers**.

*For detailed information on how to configure the control panel, please refer to the control panel programming manuals.*

## 12. Converting the PAGER type messages into SMS messages

If connected to a device with PAGER type message sending capability, the module can convert the PAGER type messages into SMS messages.

1. Enter the SMS center number, unless it has been written by the operator to the SIM card memory (see “SMS center number” p. 34).
2. Program the number of pager station (see “PAGER station number” p. 44).
3. You can program a country code which will be placed before the cellular telephone number to which the SMS message is to be sent (see: “SMS prefix” p. 45).

## 12.1 Working in conjunction with the DT-1 dialer

In the DT-1 dialer:

1. Program the signal parameters for the paging system station according to Table 2.

| DT-1 | C | 1 | 2 | 2 | A | 0 | E | 0 | 0 | 7 | A | 8 |
|---|---|---|---|---|---|---|---|---|---|---|---|---|

Table 2. Parameters of the paging station signal for the DT-1 dialer.

2. Program the other parameters required to start the PAGER type messaging (see DT-1 dialer manual).

# 13. Sending SMS messages from the telephone connected to telephone line output

The module makes it possible to send SMS messages from the landline telephone set, generating the DTMF signals, connected to the telephone line output.

The module can work in 2 modes:

1. Numeric mode:
   - pressing any telephone key from 0 to 9 means entering the corresponding digit into the message;
   - pressing the [*] key twice means switching over to the text mode.
2. Text mode:
   - three letters correspond to each numeric key (see: Fig. 54);
   - pressing the key means entering the middle letter;
   - pressing in turn the numeric key and [*] means entering the letter on the left-hand side of the given key;
   - pressing in turn the numeric key and [#] means entering the letter on the right-hand side of the given key;
   - pressing the [0] key means entering a space;
   - pressing in turn the [0] and [*] keys means entering a dash;
   - pressing the [1] key means entering a dot;
   - pressing in turn the [0] and [#] keys means switching over to the numeric mode.

The message will be sent on pressing the [#] key when the module is in the numeric mode.

In order to send an SMS message:

1. Lift the receiver of the telephone connected to the telephone line output.
2. Dial the pager station number programmed in the module (see “PAGER station number” p. 44), and then the telephone number to which the SMS message is to be sent. The number should be dialed as soon as possible, without time gaps between the successive digits.
3. Two beeps will be generated by the module to acknowledge the number, if correctly received. No acknowledgement or a busy signal mean a dialing error and the necessity to restart the procedure (to make it easier, you can use the “Redial” key).

4. Enter the message according to the above described rules.

*The SMS message sent from a landline telephone set can contain up to 62 alphanumeric characters.*

*Hanging-up when the text is being entered will terminate the SMS message sending process.*

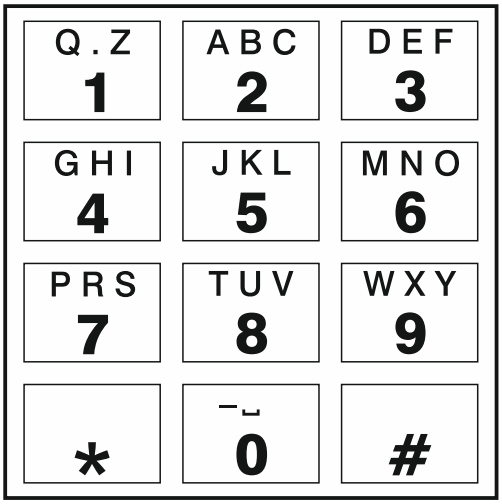


Fig. 54. Assignment of alphanumeric characters to telephone keypad.

## 14. The rules for converting the numbers

If the calls are realized by the module cellular communicator, the telephone number received from the control panel or a traditional telephone set is subjected to conversion still before being sent over to the module cellular communicator.

1. When dialing the number, the module first checks if its initial digits are consistent with:
   - the monitoring station telephone number (see p. 46) – the number conversion is not applicable,
   - the number of telephone for DTMF control from a locally connected telephone set (see p. 56) – the conversion applies to the digits following the DTMF control number,
   - FLASH prefix (see p. 43) – the conversion applies to the digits following the prefix,
   - the pager station number (see p. 44) – the conversion applies to the digits following the pager station number,
   - one of the programmed outgoing numbers (see p. 45) – the conversion applies to the digits following the outgoing number.
2. 4 seconds after dialing the last digit, the module proceeds to converting the number. The module checks if it is on the list of allowed telephone numbers (see p. 45). If the number is on the list or the “GSM accepts any tel. number” option (p. 42) is enabled – the number is considered correct and the module will make the connection.

## 15. Module firmware update

*When the firmware update is running, the module does not execute its normal functions.*

*Save the module settings before you run the firmware update.*

## 15.1 Local update

1. Download the update program for GSM-X LTE module firmware from www.satel.pl.
2. Connect the module USB Micro-B socket with the computer USB port.
3. Run the update program for module firmware.
4. Click .
5. When a prompt window is displayed asking you whether to continue the firmware update, click “Yes”. The firmware of module will be updated. If the GSM-X-ETH / GSM-X-PSTN module is installed, its firmware will be updated too.

## 15.2 Remote update

1. Program the parameters for remote update of the module firmware in the module (see “Remote update” p. 61).
2. Initiate the update from the GX Soft program (see p. 61) or by using an SMS message.

### 15.2.1 Initiating the update by using SMS message

*The SMS messages which initiate the download and update of firmware can only be sent from an authorized telephone number (see “Tel. numbers verification (SMS/DTMF control and answer to CLIP)” p. 33).*

1. Send to the number of SIM card used by the module an SMS message containing control command to initiate firmware download from the “UpServ” update server (see “SMS command” p. 62). If the “Update server address in SMS” option is enabled in the module and you want the module to connect to an update server other than that indicated in the module settings, the message should look like this: **xxxx=aaaa:pp=** (“xxxx” – control command; “aaaa” – server address (IP address or domain name); “pp” – port number).
2. Completion of the new firmware download will be indicated by the module with an SMS message.
3. Send an SMS message containing the control command to initiate the module firmware update (see “SMS command” p. 62). If the update initiating control command has not been programmed in the module, the firmware update process will be started automatically by the module after the download is completed.
4. Completion of the module firmware update will be indicated by the module with an SMS message.

*If any errors in the module firmware make its update impossible, enter the starter mode to update the firmware (see description of RESET pins p. 13).*

# 16. Restoring the factory settings

1. Click on the “Project” tab in the GX Soft program.
2. Click on “Factory settings” button. You will be prompted whether to restore the factory settings.
3. Click on “Yes”.

# 17. Specifications

**GSM-X LTE**

Number of inputs.....8

Number of outputs OC type ..... 4
power supply ..... 1
Supply voltage ..... 12...24 VDC -10% / +25%
Standby current consumption ..... 140 mA
Maximum current consumption ..... 500 mA
OC type outputs ..... 200 mA / 12 VDC
AUX output ..... 200 mA / 12 VDC
Environmental class according to EN50130-5 ..... II
Operating temperature range ..... -10...+55°C
Maximum humidity ..... 93±3%
Electronics board dimensions ..... 141 x 70 mm
Enclosure dimensions ..... 126 x 158 x 46 mm
Weight ..... 269 g

**GSM-X-ETH**

Standby current consumption ..... 25 mA
Maximum current consumption ..... 25 mA
Environmental class according to EN50130-5 ..... II
Operating temperature range ..... -10...+55°C
Maximum humidity ..... 93±3%
Electronics board dimensions ..... 61 x 51 mm
Weight ..... 25 g

**GSM-X-PSTN**

Standby current consumption ..... 20 mA
Maximum current consumption ..... 45 mA
Environmental class according to EN50130-5 ..... II
Operating temperature range ..... -10...+55°C
Maximum humidity ..... 93±3%
Electronics board dimensions ..... 61 x 51 mm
Weight ..... 25 g

# 18. Appendix

## 18.1 Data format for JSON and MQTT protocol

### 18.1.1 Format of the frame sent by the module

```
{"IMEI":"868325024202972", "I1":1, "BI2":1, "I3":0, "I4":0, "I5":1,
"BI6":1, "I7":0, "I8":0, "O1":1, "O2":0, "O3":1, "O4":0, "RSSI":64,
"P":13692, "SP":"XY [4G]", "EV":44, "MEV":619}
```

**IMEI** – individual identification number of the module cellular communicator.

**I1…I8** – input status (NO [0 = not violated, 1 = violated], NC [1 = not violated, 0 = violated].

**BI1…8:1** – input bypassed.
**O1…O4** – output status (0=OFF, 1=ON).
**RSSI** – indicator of received radio signal strength in percent.
**P** – value of the module supply voltage (multiplied by 1000).
**SP** – currently selected cellular network operator and network type.
**EV** – index of the event last saved to module memory.
**MEV** – maximum index for events saved to module memory (circular buffer).

### 18.1.2 Format of the module control frame

You can use the JSON and MQTT protocol to send to the module a frame with control command:

**"BIX":1** / **"BIX":0** – bypass/unbypass input, where: X = input number from 1 to 8.
**"OX":1** / **"OX":0** – activate/deactivate output, where: X = output number from 1 to 4.
**"MOX":1** / **"MOX":0** – activate/deactivate output and save its status, where: X = output number from 1 to 4 (after module restart or power supply failure, the output will be switched to the status saved).
**"TOX":1** – activate output for the time preset in the module (see “Operating time” p. 38), where: X = output number from 1 to 4.

A frame sent to the module may contain several control commands arranged in any order; see the example below:

```
{"MO3":0, "O2":1, ”TO5”:1, "BI2":1}
```

where:

**"MO3":0** – deactivate output 3 and save its status,
**"O2":1** – activate output 2,
**"TO4":1** – activate output 4 for the time preset in the module,
**"BI2":1** – bypass input 2.

### 18.1.3 Format of the event log reading frame

You can use the JSON and MQTT protocols to send to the module a frame with control command that will start the reading of events saved to module memory. See the example below:

```
{"GEV":{"EV":27, "CNT":10, "DIR":"-"}}
```

where:

**GEV** – control command which, if sent to the module, will start the reading of events in accordance with the following parameters:
- **EV** – index of the event from which to start the reading,
- **CNT** – number of events which are to be read (number of events read may be limited by the amount of free memory available in the module buffer),
- **DIR** – direction of reading:
  - **-** – if you want the reading to proceed towards events prior to the starter event,

**+** – if you want the reading to proceed towards events subsequent to the starter event.

In response to the command the module will send a frame containing the list of events with the following information displayed for each of the events:

**EV** – event index,

**ET** – event type (linked to DATA field),

**TS** – Unix timestamp (GMT),

**DATA** – event description.

# 19. Manual update history

| Manual version | Introduced changes |
|---|---|
| 09/20 | • Section “Introduction” has been updated (p. 4).<br>• Section “Features” has been updated (p. 4).<br>• Section “Typical module applications” has been updated (p. 7).<br>• Section “Electronics board” has been updated (p. 12).<br>• Description of LED indicators on the RJ-45 connector has been modified (p. 19).<br>• Section “GSM-X-PSTN telephone module” has been added (p. 20).<br>• Description of “GSM-X-ETH/PSTN firmware version” field has been modified (p. 31).<br>• Description of “SMS center number” field has been modified (p. 34).<br>• Description of “GSM-X-ETH/PSTN” option has been modified (p. 37).<br>• Description of “ETH/PSTN trouble” option has been modified (p. 39).<br>• Section “Reporting” has been updated (p. 47).<br>• Description of “Tel. no. 2 (Ch2)” field has been modified (p. 50).<br>• Description of “T1…T8” fields has been modified (p. 54).<br>• Description of “T1...T8” fields has been modified (p. 56).<br>• Description of “SMS command” field has been modified (p. 57).<br>• Description of the control command for sending SMS messages via the module has been added (p. 58).<br>• Specifications for “GSM-X-PSTN” module have been added (p. 75). |
| 11/21 | • Section “Features” has been updated (p. 4).<br>• Section “Typical module applications” has been updated (p. 7).<br>• Section “Description of terminals” has been modified (p. 13).<br>• Section “GSM-X-PSTN telephone module” has been updated (p. 20).<br>• Information about required GX Soft program version has been added (p.22).<br>• Section “Description of the GX Soft program” has been updated (p. 22).<br>• Section “Establishing connection between the program and the module” has been updated (p.29).<br>• Section “Project” has been updated (p. 30).<br>• Section “Data” has been deleted.<br>• Description of “Polarity” option has been added (p. 40).<br>• Section “Communication” has been updated (p. 40).<br>• Description of “GSM voice channel volume” parameter has been added (s. 44).<br>• Section “Reporting” has been updated (p. 47).<br>• Section “Messaging” has been updated (p. 51).<br>• Section “Event converter” has been updated (p. 55).<br>• Section “CLIP control” has been updated (p. 58).<br>• Section “Remote update” has been updated (p. 61). |

| | |
|---|---|
| | • Section “IoT” has been added (p. 62).<br>• Section “Events” has been updated (p. 65).<br>• Section “Appendix” has been added (p. 75). |
| 07/22 | • Section “Side menu” has been updated (p. 25).<br>• Description of advanced VoLTE settings has been added (p. 36).<br>• Note in the “Managing voice messages” section has been updated (p. 52).<br>• Section “IoT” has been updated (p. 62). |
| 07/23 | • Section “Features” has been updated (p. 4).<br>• Section “Electronics board” has been updated (p. 12).<br>• Section “Connecting the computer to the module” has been updated (p. 18).<br>• Information on the required version of GX Soft program has been updated (p. 22).<br>• Section ““Settings” window” has been updated (p. 28).<br>• Description of the “Preferred network type” parameter has been changed (p. 36). |