MEITRACK K211 GPS Smart Lock User Guide

Change History

File Name	MEITRACK K211 GPS Smart Lock User Guide		
Project	K211	Creation Date Update Date	2022-07-21 2023-02-17
Subproject	User Guide	Total Pages	21
Version	V2.2	Confidential	External Documentation

Copyright © 2022 Meitrack Group All rights reserved.

Contents

1 Copyright and Disclaimer - 4 -
2 Product Introduction - 4 -
2.1 Product Features - 4 -
2.1.1 LoRa Communication (Optional) - 4 -
2.1.2 Locking or Unlocking the K211 - 5 -
2.1.3 Dual SIM Cards - 6 -
2.1.4 Magnetic Charging - 7 -
2.1.5 Strong Magnetic Adsorption - 7 -
2.1.6 Anti-collision Soft Adhesive - 8 -
2.1.7 Security Performance - Super Password - 8 -
3 Product Functions - 9 -
3.1 Position Tracking - 9 -
3.2 Alerts - 9 -
3.3 Other Functions - 10 -
4 Product Specifications - 10 -
5 Main Device and Accessories - 11 -
6 First Use - 12 -
6.1 Installing a SIM Card - 12 -
6.2 Turning on the K211 - 12 -
6.3 LED Indicator - 13 -
6.4 Device Configuration - 13 -
6.4.1 Installing the USB Driver - 13 -
6.4.2 Configuring Device Parameters by Meitrack Manager - 14 -
6.5 Binding or Unbinding the T399G - 15 -
6.5.1 Binding the T399G - 15 -
6.5.2 Unbinding the T399G - 15 -
6.6 Common SMS Commands - 16 -
6.6.1 Setting GPRS Parameters – A21 - 16 -
6.6.2 Setting a Smart Sleep Mode – A73 - 16 -
6.6.3 Setting the Maximum Working Time of the Woken GPS Module – A83 - 17 -
6.6.4 Setting the SMS Time Zone – B35 - 17 -
6.6.5 Disabling the Power-off Function of the Power Button – C77 - 17 -
6.6.6 Authorizing an RFID Card – D10 - 17 -
6.6.7 Authorizing RFID Cards in Batches – D11 - 18 -
6.6.8 Locking or Unlocking the K211 – D82 - 18 -
6.6.9 Selecting a Locking Method – D83 - 18 -
6.6.10 Setting the automatic authorization time of swiping the RFID card – DB0 - 19 -
6.6.11 Changing Super Password – F22 - 19 -
7 Using the Platform - 19 -
7.1 MS03 Tracking System - 19 -
7.2 Authorizing RFID Cards in Batches by MS03 - 20 -
8 Device Installation - 21 -

Copyright © 2022 Meitrack Group All rights reserved.

1 Copyright and Disclaimer

Copyright © 2022MEITRACK. All rights reserved.

, and are trademarks that belong to Meitrack Group and its subsidiary.

The user manual may be changed without notice.

Without prior written consent of Meitrack Group, this user manual, or any part thereof, may not be reproduced for any purpose whatsoever, or transmitted in any form, either electronically or mechanically, including photocopying and recording.

Meitrack Group shall not be liable for direct, indirect, special, incidental, or consequential damages (including but not limited to economic losses, personal injuries, and loss of assets and property) caused by the use, inability, or illegality to use the product or documentation.

2 Product Introduction

The K211 is a GPS smart lock that supports Long Range (LoRa) and GPRS communication. Its main functions include real-time lock status monitoring, anti-tamper alert, anti-cut alert, swiping an RFID card to lock or unlock the device, and super long standby time. There is no button on the outer case of the device, and the IP67 water resistance rating makes the device withstand harsh environments ,and the device also has a crash-proof housing design. It is specially designed for door lock management in various land and sea transportation such as box trucks, trailers and containers.

2.1 Product Features

2.1.1 LoRa Communication (Optional)

This function is used for communication between the K211 and the T399G vehicle tracker. After the LoRa connection is successful, the K211 will send information such as lock status information and battery power to the T399G via LoRa. To establish LoRa communication between the K211 and the T399G, the two devices must be bound each other. For details about how to bind the T399G to the K211, see the section 6.5 "Binding or Unbinding the T399G."

LoRa connection process:

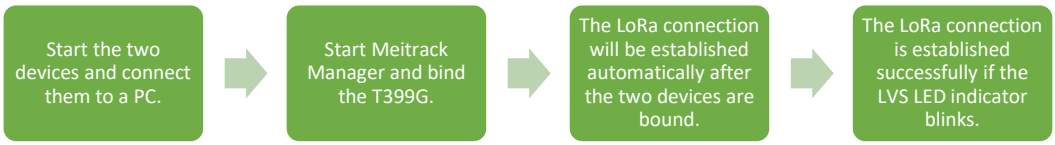

T399G and K211 communication features:

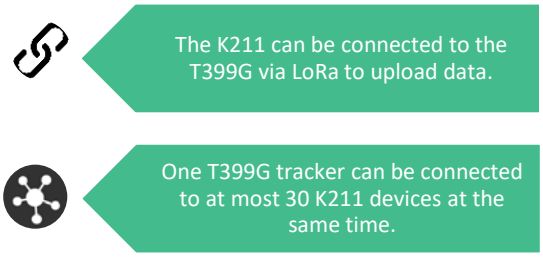

Communication diagram

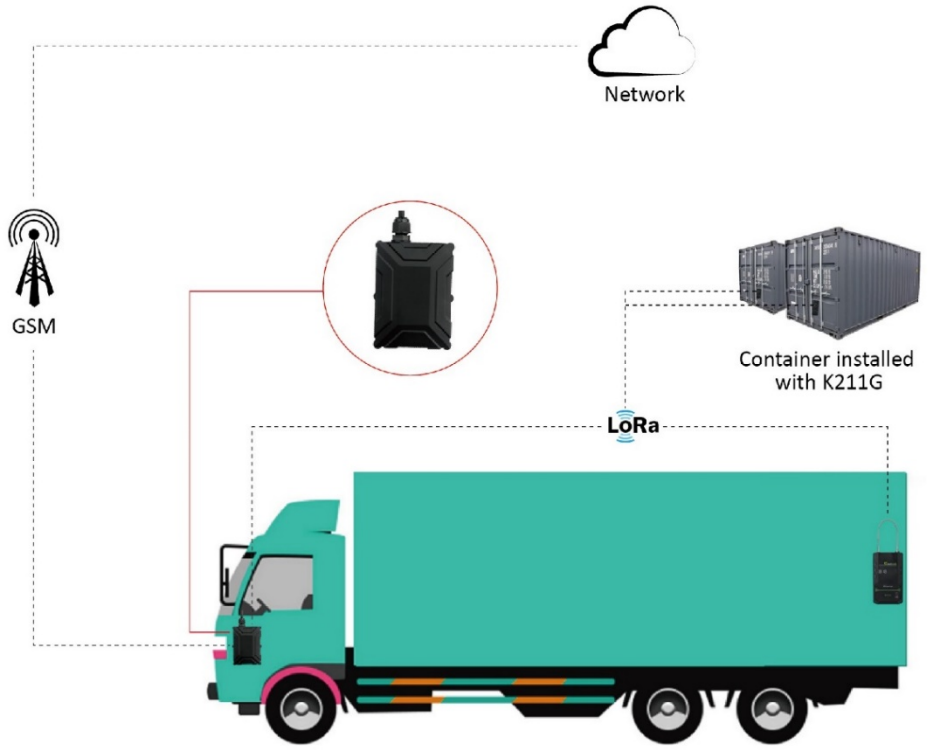

K211 Working Mode		Status
LoRa connected		The GPS and GSM modules of the K211 enter the sleep mode, and its lock status information and alerts will be uploaded to the server through the T399G.
LoRa disconnected	Deep sleep mode (send heartbeat packets once every one hour)	After the K211 is started properly, if no event is triggered, the K211 will enter the deep sleep mode (the GPS module will stop) after five minutes (default time). The wakeup conditions include vibration, swiping RFID cards ,Call ,SMS and sending heartbeat packets.
	Super deep sleep mode (send heartbeat packets once every one hour)	After the K211 is started properly, if no event is triggered, the K211 will enter the deep sleep mode the GPS and GSM module will stop) after five minutes (default time). The wakeup conditions include vibration, swiping RFID cards and sending heartbeat packets.
	Sleep mode disabled	Report data at the preset interval.

2.1.2 Locking or Unlocking the K211

Locking or Unlocking by Swiping RFID Cards

Copyright © 2022 Meitrack Group All rights reserved.

The function is used to lock or unlock the K211 by swiping authorized RFID cards. When you swipe an RFID card, the K211 will automatically detect and record the unlocking time, location and RFID card number, and these data will be sent to the server.

Operation process: Put the authorized RFID card on the K211's card swiping area. When the K211 detects this action, the buzzer will beep and the LVS LED indicator will be steady on, indicating that the K211 is unlocked. In this way, the last step for you is to pull out the lock rope. (To lock the K211, you only need to swipe the RFID card once. Then the buzzer will beep and the LVS LED indicator will be off, indicating that the K211 is locked.)

Swiping an RFID card:

Note: In the locking or unlocking state, if you swipe an unauthorized RFID card, the buzzer will beep twice， but the K211 cannot be unlocked and locked. If you swipe an authorized RFID card, the buzzer will beep once. Before the K211 is locked,it is recommended to apply appropriate force on the lock rope first to make the waterproof ring of cable fully contact with the lock hole and improve the waterproof performance， and if the lock rope is cut, K211 cannot be locked. After the K211 is unlocked, if you do not pull out the lock rope within one minute, the K211 will be locked automatically.

Locking or Unlocking by Commands

Command	Description	How to Send
D82	This command is used to lock or unlock the K211.	Send the command by SMS or GPRS. For details about the SMS command format, see the section 6.6.8 "Locking or Unlocking the K211 – D82."
D83	This command is used to select a locking method: auto locking or locking by swiping RFID cards.	Send the command by SMS or GPRS. For details about the SMS command format, see the section 6.6.9 "Selecting a Locking Method – D83."

2.1.3 Dual SIM Cards

The K211 can be installed with two Micro SIM cards and supports the dual SIM single standby mode. The device will automatically select a SIM card to register the network. SIM1 (on the right) will be selected by default. If SIM1 fails to register the network, SIM2 (on the left) will be selected to do this. (Please ensure that at least one SIM card can be used normally.)

Copyright © 2022 Meitrack Group All rights reserved.

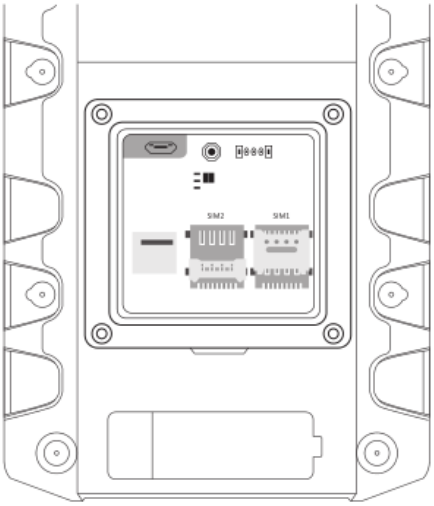

2.1.4 Magnetic Charging

You can use the magnetic charging cable to charge the K211. The device supports 9V/2A power adapter, and it will take a total of 7.5–8 hours to charge the device fully.

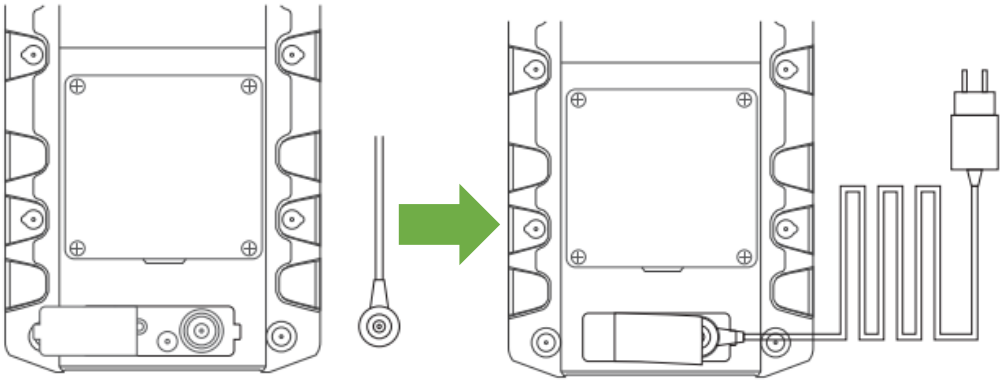

2.1.5 Strong Magnetic Adsorption

The back of the cover plate has strong magnetic, which can be adsorbed to the car door to prevent the device from shaking during movement.

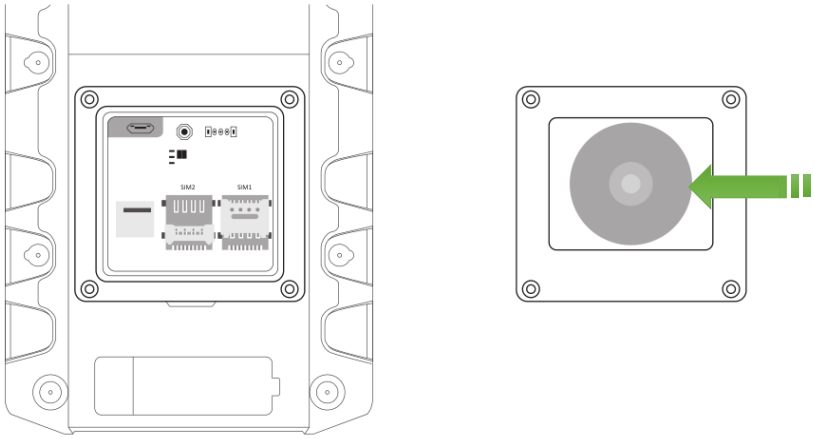

Copyright © 2022 Meitrack Group All rights reserved.

2.1.6 Anti-collision Soft Adhesive

The gray protruding part in the figure is Anti-collision soft adhesive, which has shock absorption effect and it can effectively protect the device from being damaged in the collision.

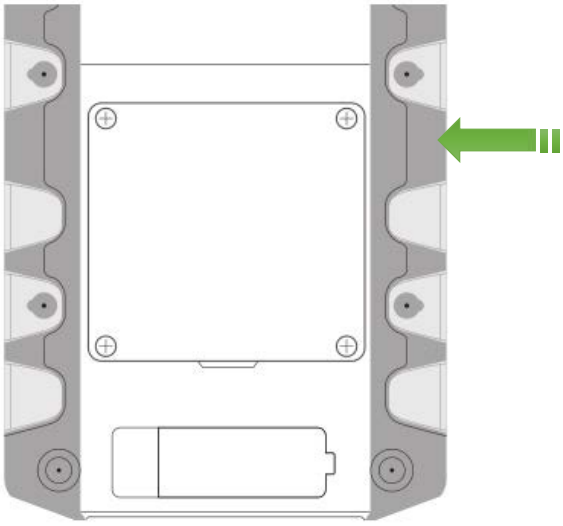

2.1.7 Security Performance - Super Password

To enhance security, K211 supports super password.

Super password (the default is 666888) supports all SMS commands, but DB0 / D82 / D10 / D11 / D14 D15 / A21 / F22 commands can't use the original SMS password (the default is 0000), they can only use super password.

When setting GPRS parameters through Meitrack Manager, you need to open the super password first before setting successfully:

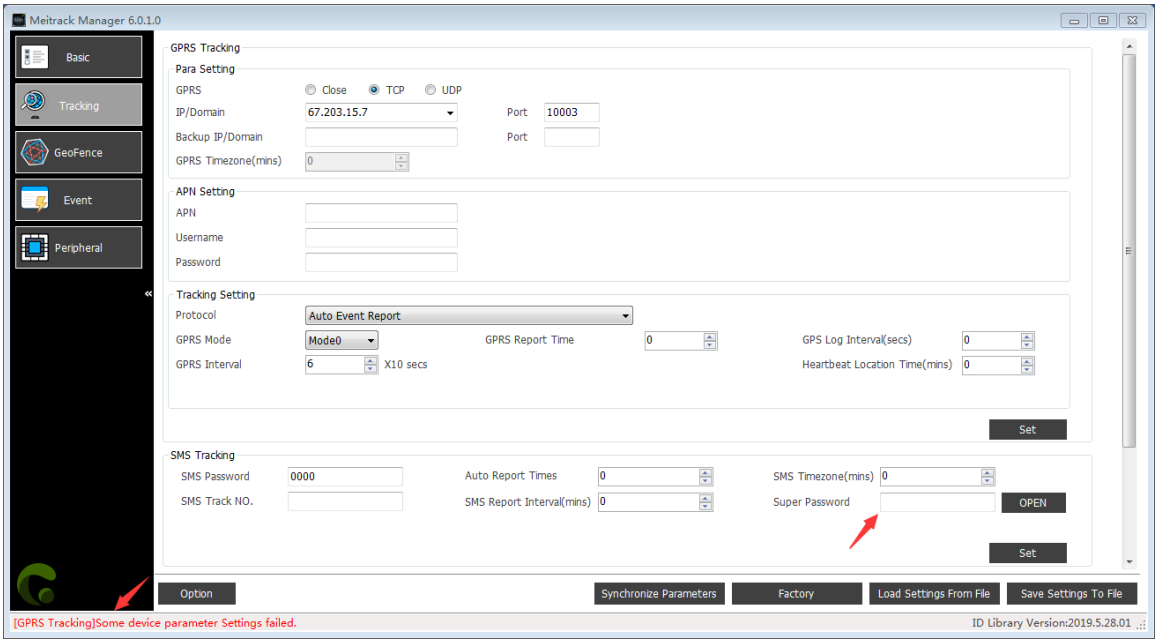

Copyright © 2022 Meitrack Group All rights reserved.

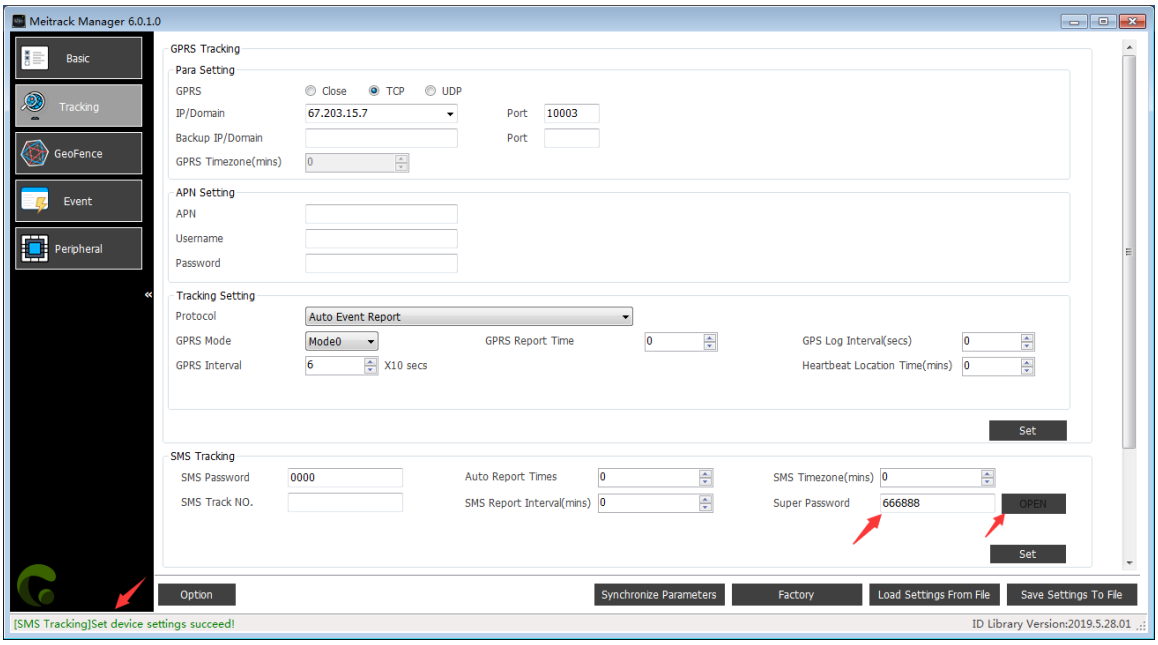

Note：

It is recommended to set a new super password first, because the super password is related to the security of unlocking; The default super password is 666888, which can be modified by Meitrack Manager and F22 command.Please make sure to remember the super password, and the super password cannot be quested and reset to the original value, once you forget the password, it will not be able to recover.

3 Product Functions

3.1 Position Tracking

- GPS + LBS positioning
- Real-time location query
- Tracking by time interval
- Tracking by distance
- Tracking by mobile phone
- Speeding alert
- Cornering report
- Geo-fence

3.2 Alerts

Alert	Description
Outer case removal/open alert	An alert will be generated when the K211's outer case is removed or the back cover is opened.
Lock tamper alert	An alert will be generated when the lock rope is cut off.
T399G disconnected alert (LoRa communication is required)	An alert will be generated when the K211 is disconnected from the T399G.
Unlocking alert	An alert will be generated when you swipe an authorized RFID card to

Copyright © 2022 Meitrack Group All rights reserved.

	unlock the K211.
Locking alert	An alert will be generated when you swipe an authorized RFID card to lock the K211.
Unlocking failure alert	An alert will be generated when the K211 fails to be unlocked by swiping an authorized RFID card.
Locking failure alert	An alert will be generated when the K211 fails to be locked by swiping an authorized RFID card.

3.3 Other Functions

Function	Description
Binding and unbinding	Enter the IMEI number of the T399G on Meitrack Manager software to bind the T399G to the K211.
LoRa communication (optional)	Report lock status information of the K211 via LoRa.
Deep sleep mode	The K211 can be woken up by vibration, swiping RFID cards and sending heartbeat packets. If no event is triggered, the K211 will enter the deep sleep mode after five minutes (default time).
Dual SIM cards	The K211 can be installed with two Micro SIM cards and supports the dual SIM single standby mode.
OTA update	Online OTA firmware update
Remote unlocking or locking by commands	The D82 command is used to lock or unlock the K211. You can send this command by SMS or MS03 platform.

4 Product Specifications

Item		Description
Dimension		112 mm x 195 mm x 37 mm
Lock rope length		300 mm (The length can be customized as needed.)
Weight		800g
Power supply		DC 9–14 V; 2 A
Material		The outer case of the device adopts PC materials.
Backup battery		14000 mAh/3.7 V
Power consumption		Current in standby (sleep) mode: 9 mA Current in normal working mode: 95 mA
Charging time		7.5–8 hours
Operating temperature		-20°C to 55°C
Operating humidity		5%–95 %
Working hour		Power-saving mode: 78 days Normal working mode: 150 hours
Charging		Magnetic charging (DC 9 V; 2 A; fast charging)
Water resistance rating		IP67
Frequency	K211L-ER	GSM:850/900/1800/1900

Copyright © 2022 Meitrack Group All rights reserved.

band		LTE-FDD:B1/B3/5/B7/B8/B20/B28
	K211L-AUR	GSM:850/900/1800/1900 LTE-FDD: B2/B3/B4/B5/B7/B8/B28/B66
	K211E	GSM:850/900/1800/1900 Cat M1/Cat NB2: LTE-FDD:B1/B2/B3/B4/B5/B8/B12/B13/B14/B18/B19/B20/B25/B26/B27/B28/B66/B71/B85
GPS antenna		Built-in GPS antenna
GPS sensitivity		-161 dB
Positioning accuracy		2.5 meters
LoRa communication distance (optional)		At most 20 meters (obtained from actual tests in trucks' containers)
LoRa working frequency (optional)		137–1020 MHz (433 MHz by default)
LoRa antenna (optional)		Built-in spring antenna
RFID module frequency		125 KHz
Memory		64 MB
SIM card installation		Flip the card slot cover to install Micro SIM cards; dual SIM cards

5 Main Device and Accessories

Note:

1. Two RFID cards are standard, optional more and white type RFID card. The Power adapter(9V) can choose UL or VDE.
2. USB cable is optional. Use common Android data cable.

Copyright © 2022 Meitrack Group All rights reserved.

6 First Use

6.1 Installing a SIM Card

Remove the four screws from the cover and take the cover out.

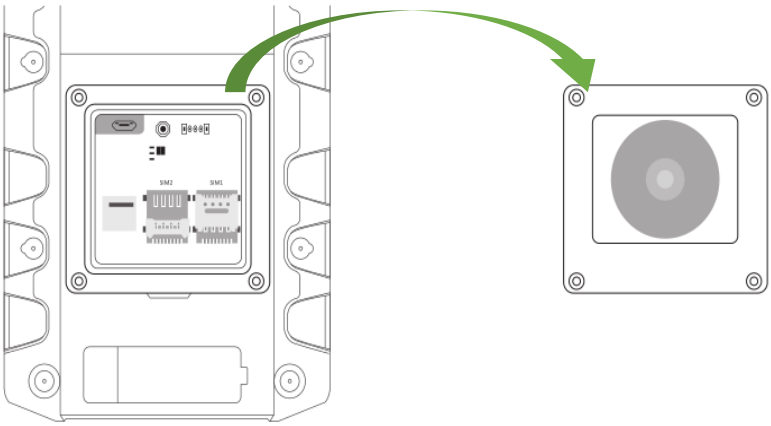

Insert a SIM card into one of the card slots (SIM1: right; SIM2: left).

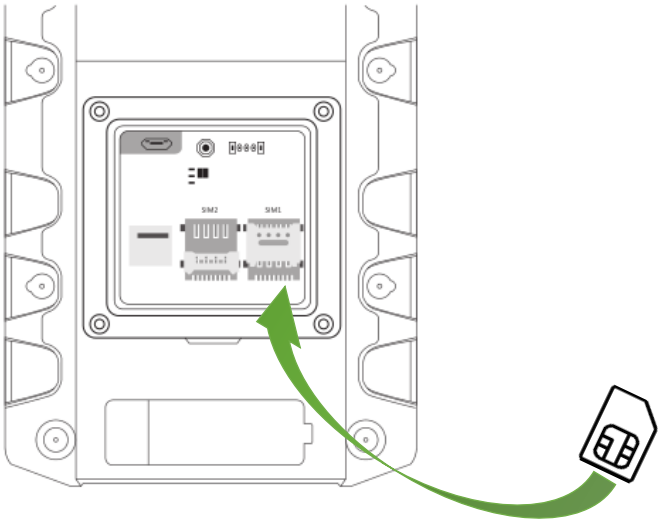

6.2 Turning on the K211

Press the power button for 3 seconds. Then the GPS and GSM LED indicators will blink fast, indicating that the device is turned on.

Copyright © 2022 Meitrack Group All rights reserved.

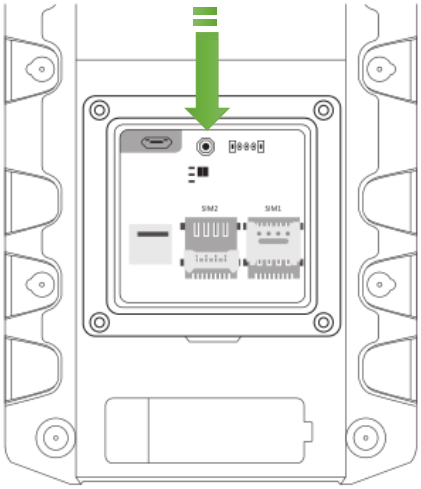

Note: When using the device for the first time, you are advised to charge the battery fully.

6.3 LED Indicator

LVS LED Indicator (Green)	
Steady off	The K211 is locked or is not connected to the T399G.
Steady on	The K211 is unlocked.
Blink fast (0.2 seconds on and 4.8 seconds off)	The K211 is connected to the T399G.
GPS LED Indicator (Blue)	
Blink fast (once every 0.1 seconds)	The K211 is being initialized, or the battery power is low.
Blink fast (0.1 seconds on and 2.9 seconds off)	A GPS signal is received.
Blink slowly (1 second on and 2 seconds off)	No GPS signal is received.
GSM LED Indicator (Green)	
Steady on	There is an incoming call, or the subscriber you dialed is busy now.
Blink fast (once every 0.1 seconds)	The K211 is being initialized.
Blink fast (0.1 seconds on and 2.9 seconds off)	A GSM signal is received.
Blink slowly (1 second on and 2 seconds off)	No GSM signal is received.
CHG LED Indicator (Red)	
Steady off	The external power supply is disconnected.
Steady on	The K211 is charging.

6.4 Device Configuration

6.4.1 Installing the USB Driver

Install the USB driver on a computer with 64-bit Windows system.

Copyright © 2022 Meitrack Group All rights reserved.

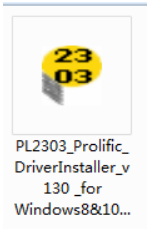

After the installation is finished, connect the K211 to the computer by USB cable. If **Prolific USB-to-Serial Comm Port (COM3)** is displayed on the **Device Manager** page, the driver is installed successfully.

Note: Before connecting the K211 to the computer by USB cable, turn on the K211 first. Otherwise, it cannot be detected by Meitrack Manager.

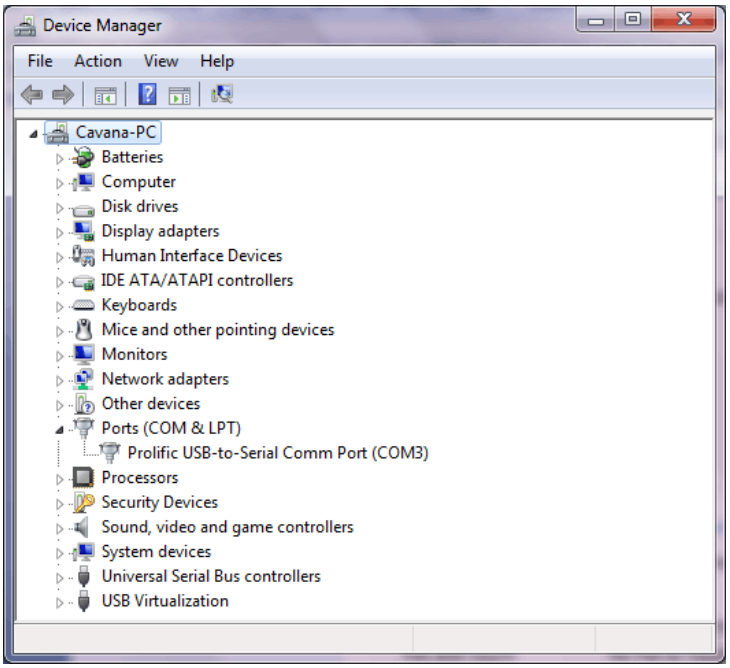

6.4.2 Configuring Device Parameters by Meitrack Manager

This section describes how to use Meitrack Manager to configure the K211 on a computer.

Operation steps:

1. Install the USB driver and Meitrack Manager.
2. Connect the device to a computer by using the USB cable.

3. Run Meitrack Manager (6.0.0.9 version or later), then the following dialog box will appear:

Copyright © 2022 Meitrack Group All rights reserved.

4. Turn on the device, then Meitrack Manager will automatically detect the device model and the parameter page will appear accordingly.

For details about Meitrack Manager, see the *MEITRACK Manager User Guide*.

6.5 Binding or Unbinding the T399G

6.5.1 Binding the T399G

To make the K211 and T399G communicate with each other via LoRa, bind the two devices. An IMEI number is the default binding information.

Perform the following steps to bind the T399G:

1. Go to the **Peripheral** page of Meitrack Manager.
2. Enter the IMEI number of the T399G.
3. Click **Binding**.
4. Click **Set**.

After the binding is successful, the IMEI number of the T399G will displayed on the **GPS Smart Lock Information** area.

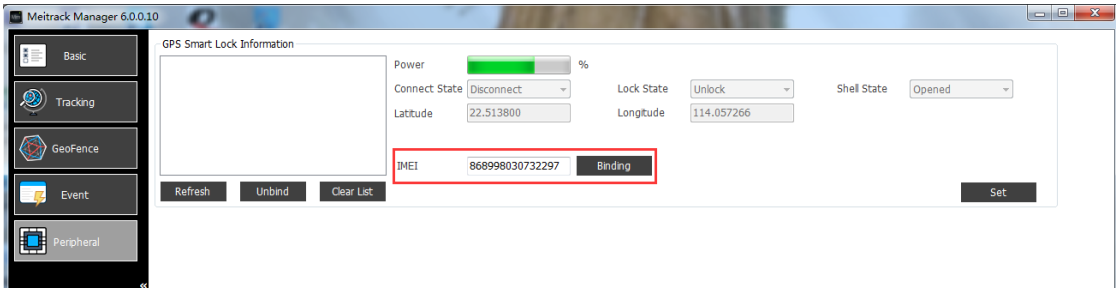

Note: To establish LoRa communication between the K211 and the T399G, the two devices must be bound each other. Please connect the T399G to the computer, and then repeat the above operations to bind the K211.

6.5.2 Unbinding the T399G

This operation is used to disconnect the communication between the K211 and the T399G. After the unbinding is successful, the GPS positioning and GSM communication functions of the K211 will be enabled automatically. Lock status information will be uploaded to the server through the K211.

Perform the following steps to unbind the T399G:

1. Go to the **Peripheral** page of Meitrack Manager.
2. Select the IMEI number to be unbound.
3. Click **Unbind**.
4. Click **Set**.

Copyright © 2022 Meitrack Group All rights reserved.

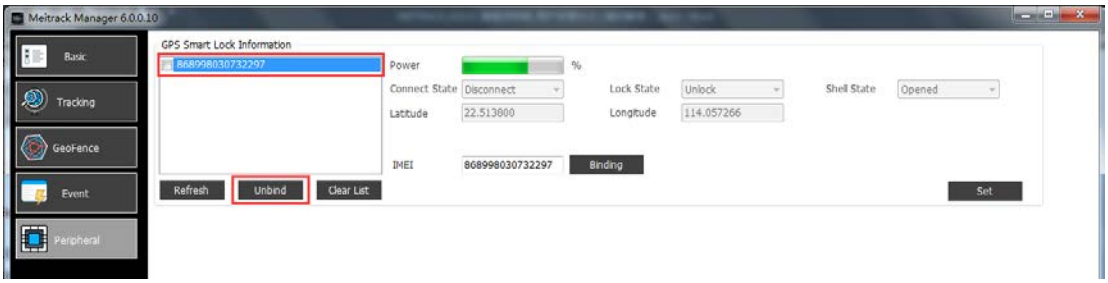

Note: The binding and unbinding functions are only available for the K211 with a LoRa module.

6.6 Common SMS Commands

6.6.1 Setting GPRS Parameters – A21

SMS Sending	Password,A21,*Connection mode*,*IP address*,*Port*,*APN*,*APN user name*,*APN password*
SMS Reply	IMEI,A21,OK
Description	Connection mode = 0: function disabled. Connection mode = 1: function enabled; use the TCP/IP reporting mode. Connection mode = 2: function enabled; use the UDP reporting mode. IP address: IP address or domain name. A maximum of 32 bytes are supported. Port: a maximum of 5 digits. APN/APN user name/APN password: a maximum of 32 bytes respectively. If no user name and password are required, leave them blank. Note: this command can only use super password.
Example	
SMS Sending	666888,A21,1,server.meigps.com,8800 ,CMNET,,
SMS Reply	353358017784062,A21,OK

6.6.2 Setting a Smart Sleep Mode – A73

SMS Sending	Password,A73,*0*
SMS Reply	IMEI,A21,OK
Description	When the sleep level is 0, the sleep mode is disabled (default). When the sleep level is 1, the tracker enters the normal sleep mode. The GSM module always works, andthe GPS module occasionally enters the sleep mode. The tracker works 25% longer in the normal sleep mode than that in the normal working mode. This mode is not recommended for short interval tracking; this will affect the route precision. When the sleep level is 2, the tracker enters deep sleep mode. If no event (RFID, shear line, vibration, incoming calls, orSMSs) is triggered after five minutes, the GPS module will stop and the GSM module will enter sleep mode. Once an event is triggered, the GPS and GSM modules will be woken up. When the sleep level is 3, the tracker enters deep sleep mode. If no event (RFID, shear line， vibration) is triggered after five minutes, the GPS and GSM module will stop. Once an event is triggered, the GPS and GSM modules will be woken up.
Example	

Copyright © 2022 Meitrack Group All rights reserved.

SMS Sending	0000,A73,0
SMS Reply	353358017784062,A73,OK

6.6.3 Setting the Maximum Working Time of the Woken GPS Module – A83

SMS Sending	Password,A83,*X*
SMS Reply	IMEI,A83,OK
Description	X: indicates the maximum working time of the GPS module woken up by heartbeat packet. Decimal; value range: 0–255; unit: minute. X = 0 (default): After the GPS module is woken up by heartbeat packet, it does not work and the GPS is invalid.
Example	
SMS Sending	0000,A83,1
SMS Reply	353358017784062,A83,OK

6.6.4 Setting the SMS Time Zone – B35

SMS Sending	Password,B35,*SMS minute*
SMS Reply	IMEI,B35,OK
Description	The default time zone of the device is GMT 0. You can run the B35 command to change the time zone of an SMS report to the local time zone. The time zone of an SMS report is different from that of a GPRS data packet. When **SMS minute** is **0**, the time zone is GMT 0. When **SMS minute** is a value ranging from -720 to 780, set time zones.
Example	
SMS Sending	0000,B35,480
SMS Reply	353358017784062,B35,OK

6.6.5 Disabling the Power-off Function of the Power Button – C77

SMS Sending	Password,C77,0
SMS Reply	IMEI,C77,OK
Description	X = 1: You can turn off the device by power button. X = 0: You cannot turn off the device by power button.
Example	
SMS Sending	0000,C77,0
SMS Reply	353358017784062,C77,OK

6.6.6 Authorizing an RFID Card – D10

SMS Sending	Password,D10,RFID(1),RFID(2),…,RFID(n)
SMS Reply	IMEI,D10,OK
Description	RFID(n): indicates the authorized RFID card number. The value ranges from 1 to 4294967295. Decimal. A maximum of 50 RFID cards can be authorized at a time.

Copyright © 2022 Meitrack Group All rights reserved.

	Note: this command can only use super password.
Example	
SMS Sending	666888,D10,00000001
SMS Reply	353358017784062,D10,OK

6.6.7 Authorizing RFID Cards in Batches – D11

SMS Sending	Password,D11,*RFID card start number*,*n*
SMS Reply	IMEI,D11,OK
Description	RFID card start number: The value ranges from 1 to 4294967295. Decimal. n: indicates the number of RFID cards to be authorized in batches. Decimal. The parameter value ranges from 1 to 128. Note: this command can only use super password.
Example	
SMS Sending	666888,D11,00000001,128
SMS Reply	353358017784062,D11,OK

6.6.8 Locking or Unlocking the K211 – D82

SMS Sending	Password,D82,*X*
SMS Reply	IMEI,D82, lock state
Description	When **X** is **0**, the K211 is locked. When **X** is **1**, the K211 is unlocked. If the command does not contain the parameter **X**, the lock status will be read. X = 0: Locking; X = 1: Unlocking; X = 2: Lock tampering; X = 3: Lock abnormal; X = 4: Parameter error. Note: this command can only use super password.
Example	
SMS Sending	666888,D82,0
SMS Reply	868998030003608,D82,OK

6.6.9 Selecting a Locking Method – D83

SMS Sending	Password,D83,*X*
SMS Reply	IMEI,D83,OK
Description	When **X** is **0**, the K211 is locked automatically. When **X** is **1**, the K211 is locked by swiping RFID cards. The auto locking method is selected by default. If the command does not contain the parameter **X**, the locking method will be read.
Example	
SMS Sending	0000,D83,0
SMS Reply	868998030003608,D83,OK

Copyright © 2022 Meitrack Group All rights reserved.

6.6.10 Setting the automatic authorization time of swiping the RFID card – DB0

SMS Sending	Password,DB0,*X*
SMS Reply	Qcom 时间 DB0,OK
Description	X: ranges from 1 to 10000. Decimal， Unit: seconds Within the automatic authorization period of swiping the card, swiping any RFID card will be automatically authorized, after the end of the automatic authorization period, the working state will be back to normal. Send command withot parameter means reading the remaining time. Note: this command can only use super password.
Example	
SMS Sending	666888,DB0,10
SMS Reply	868998030003608,DB0,OK

6.6.11 Changing Super Password – F22

SMS Sending	AAAAAA,F22,BBBBBB
SMS Reply	IME,F22,OK
Description	Need to enter super password before setting IP and port in MM. Super passwords support all SMS commands. But A21/D10/D11/D14/D15/D82/DB0/F22 commands only support super password, not SMS password. The default super password is 666888. The length is 6 digits. AAAAAA is the original super password, BBBBBB is the new password Note: this command can only use super password. Please make sure to remember the super password, and the super password cannot be quested and reset to the original value, once you forget the password, it will not be able to recover.
Example	
SMS Sending	666888,F22,OK
SMS Reply	868998030003608,F22,OK

Note: For details about SMS commands, see the MEITRACK SMS Protocol.

7 Using the Platform

7.1 MS03 Tracking System

Visit http://ms03.trackingmate.com, enter the user name and password, and log in to the MS03. (Purchase the login account from your provider.)

For more information about how to add a device, see the *MEITRACK GPS Tracking System MS03 User Guide* (chapter 4 "Getting Started").

The MS03 supports the following functions:

- Track by time interval or distance.
- Query historical trips.
- Set polygonal geo-fences.

Copyright © 2022 Meitrack Group All rights reserved.

- Bind driver and vehicle information.
- View various reports.
- Send commands in batches.
- Support OTA updates.

For details, see the *MEITRACK GPS Tracking System MS03 User Guide*.

7.2 Authorizing RFID Cards in Batches by MS03

1. On the main interface of the MS03, choose **Management**.
2. On the **Management** window that is displayed, select **Sending command** from **Use Normal**.
3. On the **Sending command** window that is displayed, set **Command** to **Authorize RFID cards in batches**, enter the RFID card start number and the number of cards, and click **Send command**.

If only one RFID card needs to be authorized, the number of cards is **1**. After the RFID cards are authorized successfully, you can swipe these cards to unlock and lock the K211 and record operator information.

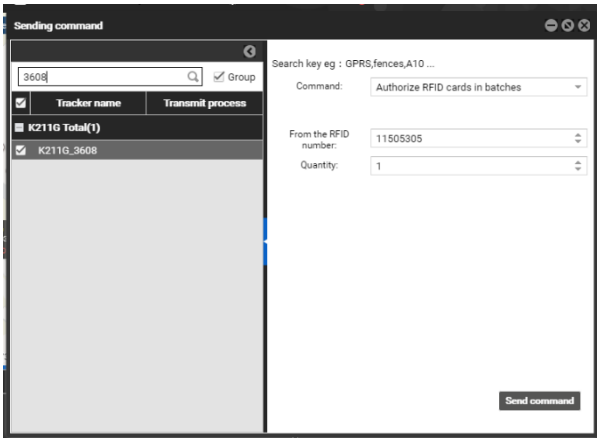

Copyright © 2022 Meitrack Group All rights reserved.

8 Device Installation

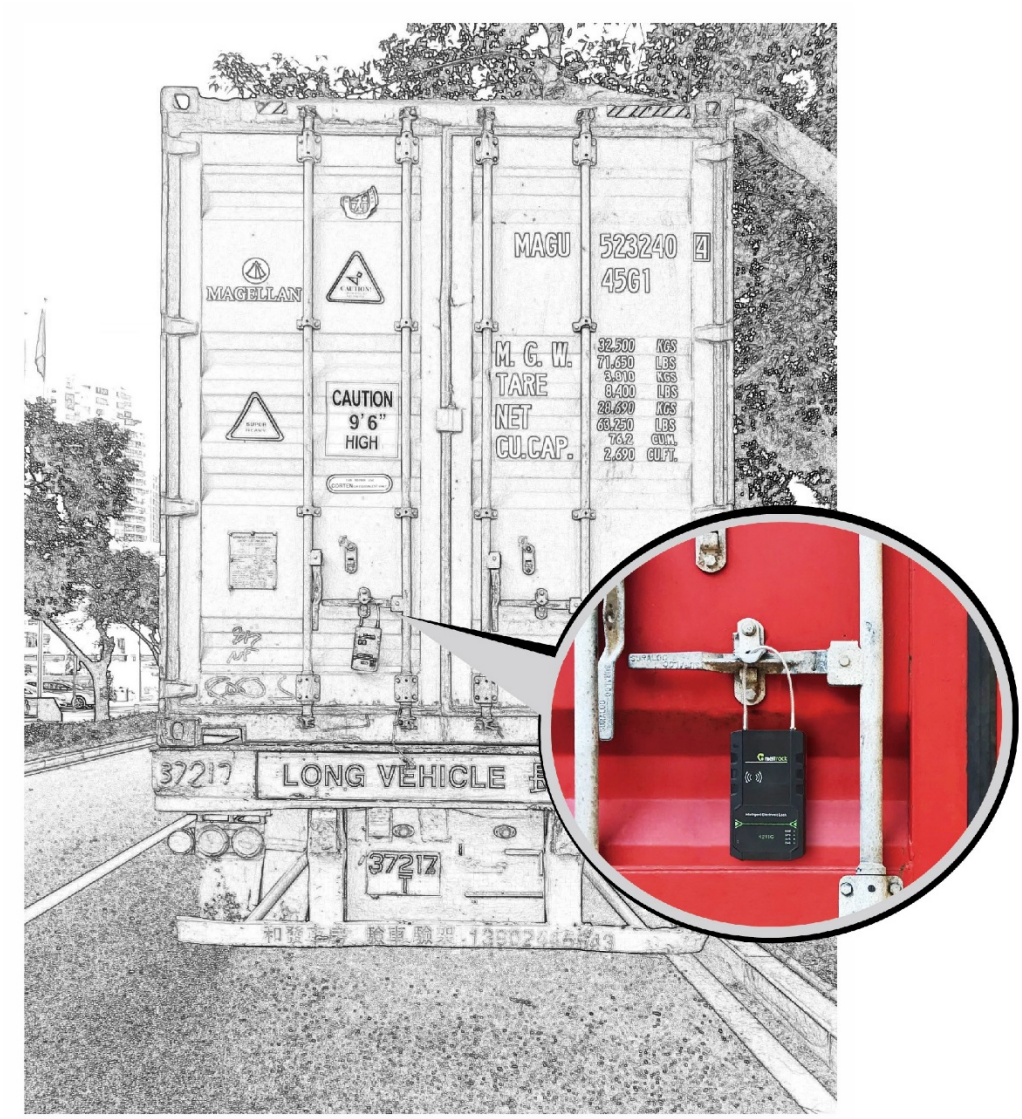

If you have any questions, do not hesitate to email us at info@meitrack.com.

Copyright © 2022 Meitrack Group All rights reserved.