InfiniScale® IV 36-Port QSFP 40 Gb/s InfiniBand Switch User Manual

P/N:
IS5025D-1BRC, IS5025Q-1BFC, IS5025Q-1SRC, IS5025Q-1SFC, IS5025Q-1BRC, IS5025Q-2SRC, IS5025Q-2BRC, IS5030Q-1BFC, IS5030Q-1SFC, IS5030Q-1BRC, IS5030Q-2BFC, IS5030Q-2SFC, IS5030Q-2BRC, IS5035Q-1BFC, IS5035Q-1BRC, IS5035Q-2BFC, IS5035Q-2BRC, IS5035Q-1SFC, IS5035Q-2SFC

Rev 3.4

www.mellanox.com

NOTE:
THIS HARDWARE, SOFTWARE OR TEST SUITE PRODUCT ("PRODUCT(S)") AND ITS RELATED DOCUMENTATION ARE PROVIDED BY MELLANOX TECHNOLOGIES "AS-IS" WITH ALL FAULTS OF ANY KIND AND SOLELY FOR THE PURPOSE OF AIDING THE CUSTOMER IN TESTING APPLICATIONS THAT USE THE PRODUCTS IN DESIGNATED SOLUTIONS. THE CUSTOMER'S MANUFACTURING TEST ENVIRONMENT HAS NOT MET THE STANDARDS SET BY MELLANOX TECHNOLOGIES TO FULLY QUALIFY THE PRODUCTO(S) AND/OR THE SYSTEM USING IT. THEREFORE, MELLANOX TECHNOLOGIES CANNOT AND DOES NOT GUARANTEE OR WARRANT THAT THE PRODUCTS WILL OPERATE WITH THE HIGHEST QUALITY. ANY EXPRESS OR IMPLIED WARRANTIES, INCLUDING, BUT NOT LIMITED TO, THE IMPLIED WARRANTIES OF MERCHANTABILITY, FITNESS FOR A PARTICULAR PURPOSE AND NONINFRINGEMENT ARE DISCLAIMED. IN NO EVENT SHALL MELLANOX BE LIABLE TO CUSTOMER OR ANY THIRD PARTIES FOR ANY DIRECT, INDIRECT, SPECIAL, EXEMPLARY, OR CONSEQUENTIAL DAMAGES OF ANY KIND (INCLUDING, BUT NOT LIMITED TO, PAYMENT FOR PROCUREMENT OF SUBSTITUTE GOODS OR SERVICES; LOSS OF USE, DATA, OR PROFITS; OR BUSINESS INTERRUPTION) HOWEVER CAUSED AND ON ANY THEORY OF LIABILITY, WHETHER IN CONTRACT, STRICT LIABILITY, OR TORT (INCLUDING NEGLIGENCE OR OTHERWISE) ARISING IN ANY WAY FROM THE USE OF THE PRODUCT(S) AND RELATED DOCUMENTATION EVEN IF ADVISED OF THE POSSIBILITY OF SUCH DAMAGE.

Mellanox Technologies
350 Oakmead Parkway Suite 100
Sunnyvale, CA 94085
U.S.A.
www.mellanox.com
Tel: (408) 970-3400
Fax: (408) 970-3403

Mellanox Technologies, Ltd.
Beit Mellanox
PO Box 586 Yokneam 20692
Israel
www.mellanox.com
Tel: +972 (0)74 723 7200
Fax: +972 (0)4 959 3245

© Copyright 2012. Mellanox Technologies. All Rights Reserved.

Mellanox®, Mellanox logo, BridgeX®, ConnectX®, CORE-Direct®, InfiniBridge®, InfiniHost®, InfiniScale®, PhyX®, SwitchX®, Virtual Protocol Interconnect® and Voltaire® are registered trademarks of Mellanox Technologies, Ltd.

Connect-IB™, FabricIT™, MLNX-OS™, ScalableHPC™, Unbreakable-Link™, UFM™ and Unified Fabric Manager™ are trademarks of Mellanox Technologies, Ltd. All other trademarks are property of their respective owners.

Table of Contents

Table of Contents 3
List of Figures 5
List of Tables 7
Revision History 8
About this Manual 10
Intended Audience 10
Related Documentation 10
Conventions 10
Mellanox Part Numbering Legend 11
Chapter 1 Overview 12
1.1 Serial Number and Product Version Information 12
1.1.1 Externally Managed Switches 12
1.1.2 Internally Managed Switches 12
1.1.3 License Key 13
Chapter 2 Internally Managed vs. Externally Managed 14
Chapter 3 Basic Operation and Installation 15
3.1 Switch Platform Hardware Overview 15
3.1.1 Status LEDs 15
3.1.2 Reset Button 19
3.2 Air Flow 20
3.3 QSFP Cable Power Budget Classification 21
3.4 Interfaces 21
3.4.1 Port Connector Interfaces 21
3.4.2 Management and FW updating Interfaces 22
3.5 Package Contents 24
3.6 Switch Platform Installation and Operation 24
3.6.1 Installation Safety Warnings 25
3.6.2 Mechanical Installation 26
3.6.3 Grounding the Switch 34
3.6.4 Power Connections and Initial Power On 35
3.6.5 Extracting and Inserting the Power Supply Unit 36
3.6.6 InfiniBand Cable Installation 37
3.6.7 Extracting and Inserting the Fan Unit 38
3.7 Disassembly of the Switch from the Rack 39
3.8 Disposal 40
Chapter 4 Management and Tools Overview 41
4.1 Network Management and Clustering Software 41
4.2 Internally Managed Switch System 41
4.2.1 Subnet Management 41
4.2.2 Fabric Management with UFM 42
4.2.3 Configuring the Switch for the First Time 43

4.2.4 Starting a Remote Connection to the Switch 43
4.2.5 Downloading Firmware 43
4.3 Unmanaged (Externally Managed) Switch 44
4.3.1 I2C Connector 44
4.3.2 Current Firmware Revision 44
4.3.3 How to Get Mellanox Firmware Tools (MFT) 48
4.3.4 Open SM 48
4.4 Updating Firmware on Managed Switches 48
Chapter 5 Troubleshooting 49
Appendix A Specification 52
A.1 EMC Certifications 57
A.2 EMC Statements 57
A.2.1 FCC Statements (USA) 57
A.2.2 EN Statements (Europe) 58
A.2.3 ICES Statements (Canada) 58
A.3 China CCC Warning Statement 59
A.4 VCCI Statements (Japan) 59
A.5 MIC Certification (Korea) 60
Appendix B Passing the Power Cord From the Connector Side to the Power Side 61
Appendix C QSFP Interface. 72
Appendix D RJ45 CONSOLE Interface 74
Appendix E Replacement Parts Ordering Numbers 75
Appendix F Avertissements de sécurité d’installation (French) 76
Appendix G Installation - Sicherheitshinweise (German) 78
Appendix H Advertencias de seguridad para la instalación (Spanish). 80
Appendix I Special Regulations Regarding Finland, Sweden, Denmark, and Norway 83

List of Figures

Figure 1: Pull Out Tab 12
Figure 2: Pull Out Tab 13
Figure 3: License Key Label 13
Figure 4: QSFP Switch System Power and Connector Side Panels. 15
Figure 5: Power, Fan, and System LEDs 16
Figure 6: System Health LED 17
Figure 7: IS5030-2BRC QSFP Power Side Panel. 18
Figure 8: PSU Status LEDs. 18
Figure 9: Reset Button 20
Figure 10: Port Numbering 22
Figure 11: Top and Bottom Ports 22
Figure 12: Management Interfaces 22
Figure 13: RJ45 I2C Connector. 23
Figure 14: Rack Rail Kit Parts MIS00083/85 28
Figure 15: Rack Rail Kit Parts MIS000079 29
Figure 16: Installation Options Available for Short Switches. 30
Figure 17: Installation Options Available for Standard Length Switches. 30
Figure 18: For Short Switches Which Side of the Rack Do You Want the Connectors ? . . 31
Figure 19: Making Room for the Power Cord 32
Figure 20: Screwing on the Bracket 32
Figure 21: Screwing on the Rail 33
Figure 22: Inserting the Caged Nuts 33
Figure 23: Connect Bracket to Rack Vertical support 34
Figure 24: Ground Connection 35
Figure 25: Two Power Inlets - Electric Caution Notifications. 36
Figure 26: Power Supply Unit Extraction 36
Figure 27: PSU Pulled Out 37
Figure 28: Top and Bottom Ports 38
Figure 29: Air Flow Labels. 38
Figure 30: Fan Module Latches. 39
Figure 31: Host Connection 43
Figure 32: MTUSB-1 with Cables 47
Figure 33: I2C Cable Connected to IS5025 47
Figure 34: Rack Installation Kit Parts 61
Figure 35: Rack Rail Kit Parts MIS00083/85 62
Figure 36: Which Side of the Rack Do You Want the Connectors? 63

Figure 37: Screwing the Rail Slide onto the switch 63
Figure 38: Caged Nut Spacing 64
Figure 39: Screwing in the Rails 64
Figure 40: Rack Rail Kit Parts MIS000079 65
Figure 41: Which Side of the Rack Do You Want the Connectors? 66
Figure 42: Full Rack 67
Figure 43: Inserting the Caged Nuts 67
Figure 44: Put the Cables Through the 1U Space 68
Figure 45: Placing the Power Cords 68
Figure 46: Power Cord Through the Rail Slide 69
Figure 47: Screwing on the Bracket 69
Figure 48: Making Room for the Power Cord 70
Figure 49: Screwing on the Rail 70
Figure 50: Power Cord Through the Bracket. 70
Figure 51: Power Side View 71
Figure 52: Connect Bracket to Rack Vertical support 71

List of Tables

Table 1: Revision History Table 8
Table 2: Reference Documents 10
Table 3: Switch Management 14
Table 4: System Status LED Configurations 17
Table 5: Connector Physical and Logical Link Indications 17
Table 6: PSU Status LED Configurations 18
Table 7: PSU Status LED Configurations 19
Table 8: Fan Status LED Configurations 19
Table 9: Air Flow Direction 21
Table 10: IS5025 Specification Data 52
Table 11: IS5030 Specification Data 54
Table 12: IS5035 Specification Data 56
Table 13: InfiniBand QSFP Connector Pinout 72
Table 14: RJ45 CONSOLE Pinout 74
Table 15: Replacement Parts Ordering Numbers 75

Revision History

Table 1 - Revision History Table

Date	Revision	Description
November 2012	Rev 3.4	• Added Note to Section 3.6.2.2 regarding lack of support for standard length switch installation with power side next to the vertical support • Added Figure 17 and Figure 18 and text regarding lack of support for Standard installation with the connector side deeper in the rack • Added CCC China Warning
October 2012	Rev 3.3	Added Note to Section 4.3 regarding unmanaged switch
July 2012	Rev 3.2	• Removed references to CD and Quick Start Guide • Added reference to “Thank You” page
February 2012	Rev 3.1	• Fixed view FW revision command Section 4.3.2 • Added pull out tab section for externally managed switches
December 2011	Rev 3.0	Minor punctuation and grammar fixes.
June 2011	Rev 2.9	• Removed references to paper clip • Changes to reset button Section 3.1.2 • Added warning do not use the switch as a shelf
June 2011	Rev 2.8	Changed three minute boot up time to 5 minutes
June 2011	Rev 2.7	Removed Flashing green from Table 4
June 2011	Rev 2.6	• Removed products scheduled for End of Life • Removed Flashing green from Table 4
May 2011	Rev 2.5	Fixed power numbers
May 2011	Rev 2.4	Changes to Section 1.1 and Section 2
May 2011	Rev 2.3	• Changes to the management sections • Removed Section 6
May 2011	Rev 2.2	• Changed Grounding section. • Removed note from Table 4 • Changed unmanaged FW update procedure
Oct. 2010	Rev 2.1	Added information regarding the MIS5031 port numbering and port activation
Oct. 2010	Rev 2.0	• New power numbers • Cable power level changed to 2.0W level 2
July 2010	Rev 1.9.1	Added “QSFP Cable Power Budget Classification”
June 2010	Rev 1.9	• Added section Getting the License • Added Note “Each Ethernet connector gets connected to Ethernet switches. These switches must be configured to 10/100M auto-negotiation.”

Table 1 - Revision History Table

Date	Revision	Description
April 2010	Rev 1.8	Added appendix with instructions for bringing the power cord from one side of the switch to the other in a full rack. Added Safety Warnings in Spanish
April 2010	Rev 1.7	Removed DDR switches.
January 2010	Rev 1.6	Added instructions in the installation section regarding putting the power cord through the bracket Figure 15 and note on page 26. Removed DDR switches.
January 2010	Rev 1.5	Updates figures to include the power side I2C connector. Added Section 3.3.2.5 I2C Interface on the power side of the switch
December 2009	Rev 1.4	Added Chapter 6 regarding FabricIT-EFM licensing information. Added Chapter 2Management modules and CPU connections Section 4.3 on unmanaged switches including The I2C connector should only be used when the FW cannot be updated in-band.
October 2009	Rev 1.3	Fixed Depth of Standard switch in the Spec sheets Added RJ45 console pinout to appendix. Fixed Status Fan LED info on page 13. Added to Troubleshooting section. Updated power numbers Added IS5025Q-2SRC, IS5025Q-2BRC model numbers
September 2009	Rev 1.2	Added Spec sheets for IS5025 and IS5035 updated revision table
September 2009	Rev 1.1	Updated power numbers
September 2009	Rev 1.0	Initial Release

About this Manual

This manual describes the installation and basic use of the Mellanox IS50XX switch, which is based on the InfiniScale IV InfiniBand switch device.

Intended Audience

This manual is intended for users and system administrators responsible for installing and setting up the switch platforms listed above.

The manual assumes familiarity with the InfiniBand® Architecture Specification.

Related Documentation

Additional Documentation available from Mellanox:

Table 2 - Reference Documents

Switch Firmware and Firmware Update Tools	See http://www.mellanox.com > Support > Download Firmware Tools Note that the Switch System described in this manual is based on Mellanox Technologies' InfiniScale® IV switch device.
Mellanox OFED Stack for Linux User's Manual	See http://www.mellanox.com > Support > InfiniBand Software and Drivers Click "Mellanox OpenFabrics Enterprise Distribution for Linux (MLNX_OFED)" Select the Linux User's Manual The embedded OS and tools on the CPU in the management module is a subset of the Mellanox OFED stack.
FabricIT Enterprise Fabric Management Software CLI User's Manual	See http://www.mellanox.com > Products > Management Software Select "FabricIT EFM - InfiniBand Fabric Management" Click "Software and Documentation Download center" select User Manual
Mellanox Firmware Tools (MFT) User's Manual Document # 2329	The MFT (Mellanox Firmware Tools) package is a set of firmware tools. The manual supplied with this package provides an overview of the firmware its installation and replacement. The MFT can be downloaded with its documentation at: http://www.mellanox.com > Support > Download Firmware Tools

Conventions

Throughout this manual, the name IS50XX and the term switch are used to describe both the 36-port QSFP 40Gb/s InfiniBand Switch and the 36-port QSFP 20Gb/s InfiniBand Switch, unless explicitly indicated otherwise.

Mellanox Part Numbering Legend

Place	Field	Decoder
M		Mellanox Technologies
IS	System Type	InfiniScale Switch
50	Model	Family
FF	Form factor	25 = 36 Ports Unmanaged 30 = 36 Ports and Chassis Management 31 = 18 ports and Chassis Management 35 = 36 ports and Fabric Management
C	InfiniBand Port Config	Q= QDR, D= DDR
-	Separator	
P	# Power Supplies	0=0, 1=1, 2=2....
M	Depth of the Unit	S = standard depth, B = short depth
Y	Air Flow direction	R= Connector side to PSU side airflow F= PSU side to Connector side airflow
R	RoHS	C=RoHS5, X=RoHS6

1 Overview

Mellanox IS50XX switch systems provide the highest performing fabric solution by delivering high bandwidth and low latency to Enterprise Data Centers, High-Performance Computing and Embedded environments. Networks built with IS50XX systems can carry converged traffic with the combination of assured bandwidth and granular quality of service. Built with Mellanox's 4th generation InfiniScale® IV InfiniBand switch device, IS50XX systems provide up to 40Gb/s full bidirectional bandwidth per port. With 36 ports, these systems are among the densest switching systems available. These stand-alone switches are an ideal choice for top-of-rack leaf connectivity or for building small to medium size clusters.

The switch comes pre-installed with all necessary firmware and is configured for standard operation within an InfiniBand fabric. This switch requires an InfiniBand compliant Subnet Manager running from one of the hosts or Fabric Management software running on the switch. All that is required for normal operation is to follow the usual precautions for installation and to connect the switch to the HCAs. Once connected, the Subnet Management software automatically configures and begins utilizing the switch.

It is recommended that the Mellanox OpenFabrics software package be installed on all nodes connected to the IS50XX. The software package provides a subnet manager and network management tools as well as connectivity software for servers and storage, and is available on the Mellanox web site. See Chapter 3 for more information.

Basic installation, hot-swapping components and hardware maintenance is covered in "Basic Operation and Installation" on page 15.

1.1 Serial Number and Product Version Information

1.1.1 Externally Managed Switches

The Serial number and GUID for the switch are found on the pull out tab below the I2C RJ-45 connector.

Figure 1: Pull Out Tab

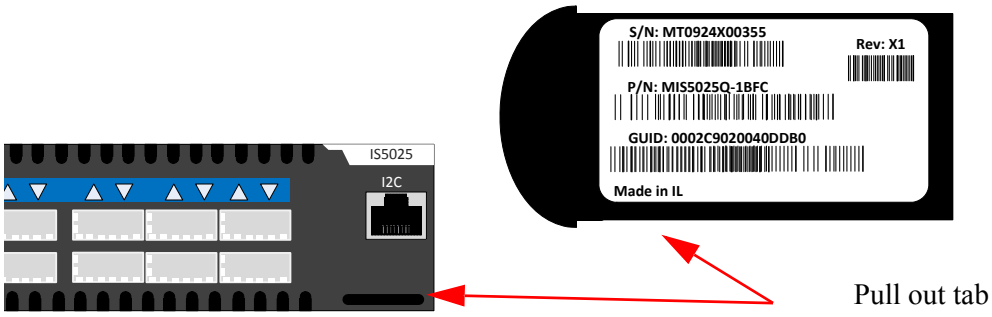

1.1.2 Internally Managed Switches

The Serial number and GUID for the switch and the MAC for the Management PC are found on the pull out tab below the USB interface connection. The key for access to the software management is pre-installed on your system, however, in the event the factory defaults reset button is pressed this key may need to be re-installed. Please see the "*FabricIT EFM Software User Man-*

ual", for instructions to install the license key. IS5030 and IS5035 management stack license is located on the bottom side of the pull out tab.

Figure 2: Pull Out Tab

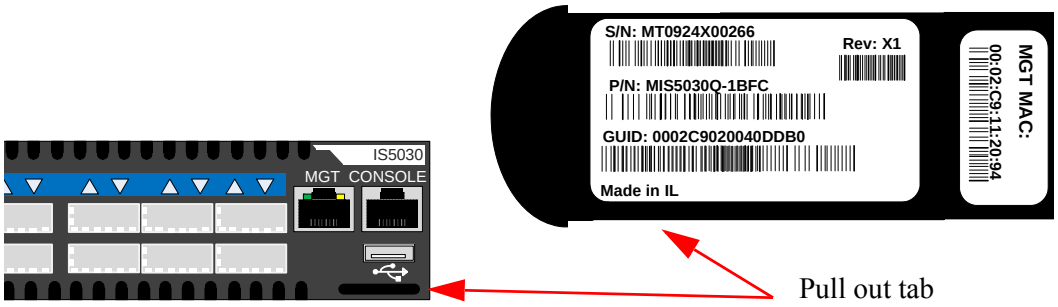

1.1.3 License Key

This switch comes with a license for FabricIT. The license key to activate the license is found on the bottom side of the pull out tab.

Figure 3: License Key Label

2 Internally Managed vs. Externally Managed

The following table shows which switches come with a management CPU and which do not.

Unmanaged switches are plug and play out of the box. All switches come with the latest FW burned on the Flash and EEPROM. Update the FW on unmanaged switches in-band only. When new FW is available you will receive an e-mail with the link to the Mellanox FW download site. The download site has the Mellanox FW tool package and full instructions for updating FW.

All managed switches have internal chassis management and can manage up to 108 nodes. FabricIT can support IB fabrics of up to 648 nodes. Managed switches need an initial configuration before they will start working. See the Installation Guide for initial configuration instructions. See Table 3 for details.

Table 3 - Switch Management

Family	Managed / Unmanaged	Management Connections
IS5025	Unmanaged	Plug and play All firmware updates should be done in-band using Mellanox Firmware Management Tools. 12C port access using MTUSB-1 device is required for firmware updates if in-band burning is not possible.
IS5030	Managed	RS232 cable DB9 to RJ45 included in the box to connect to host PC for initial configuration of the switch. After initial configuration the switch can be managed through the ethernet using a remote connection.
IS5035	Managed	RS232 cable DB9 to RJ45 included in the box to connect to host PC for initial configuration of the switch. After initial configuration the switch can be managed through the ethernet using a remote connection.

3 Basic Operation and Installation

3.1 Switch Platform Hardware Overview

Figure 4 shows the power side panel and connector side panel views of the switch. The figure shows port configurations for the switch systems, the dual hot-swap power supplies, and hot-swap fan module, Ethernet RJ45 connector, RJ45 connector for connecting to a host PC, USB connector, and various status LEDs. Unmanaged switches have an I2C RJ45 connector.

Figure 4: QSFP Switch System Power and Connector Side Panels

Power Side Panel

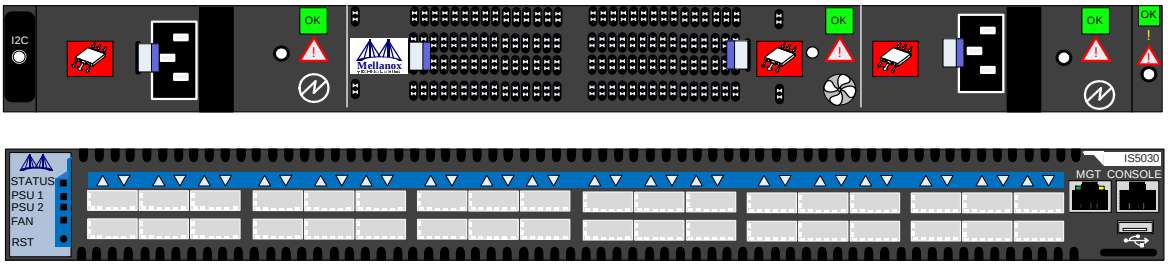

Connector Side Panel

All InfiniBand connectivity is via the connector side panel. All connectors can support active cables.

3.1.1 Status LEDs

3.1.1.1 System Status Indicators

The System Status Indicators are located to the left of the QSFP connectors on the connector side panel, and labeled “STATUS” and on the power side at the far right. Both of these LEDs give identical information.

Power side status LED

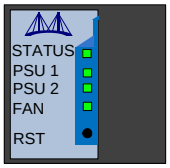

Connector side status LED

The system status indicators should display as follows:

- When the switch is plugged in, within five minutes the STATUS LED should light up green.
- The PSU LED for the plugged in PSU should light up green.
- The PSU LED for the second PSU should light up green only if a second PSU is installed in the switch for redundancy and Hot-Swap ability and it is connected to a power source. If two PSUs are installed and only one PSU is connected to a power sup-

ply the second PSU LED will be red. If only one PSU is installed in the switch, the second PSU LED will be off.

As long as there is power to the switch (one PSU is connected), and the switch is booted up and running, the status LED will be green.

The FAN LED should light up green.

If the STATUS LED shows red after five minutes unplug the switch and call your Mellanox representative for assistance.

If the FAN LED shows red, troubleshoot the fan module.

If the switch shuts down due to over temperature, unplug the switch, wait 5 minutes and replug in the switch. For more information See “Troubleshooting” on page 49.

If the PSU LEDs are not green, this indicates a problem with the power supplies. Only run the switch if at least one of the PSU LEDs is green.

Figure 5: Power, Fan, and System LEDs

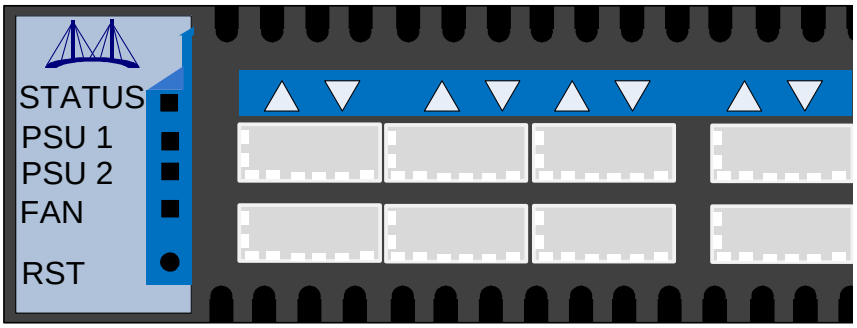

Table 4 - System Status LED Configurations

LED Configuration	STATUS/ System Health LED
Green	OK – The system is up and running.
Yellow	Error –A fault in the system, most likely the firmware did not BOOT properly.
Red	Major Error –Possible damage can result to the switch. Turn off immediately. for example: bad FW, can't boot, overheated
Off	Off – The system has no power.

3.1.1.2 Power Side Panel System LED

On the right side of the power side panel is a system LED that displays the health of the switch. This indicator is the same as the system status indicator on the other side of the switch.

Figure 6: System Health LED

3.1.1.3 Port Connector LED assignment

Above the ports are two LEDs one for the upper port ▲ and one for the lower port ▼ . The following table shows the port status according to the LED indication.

Table 5 - Connector Physical and Logical Link Indications

	LED Description
Off	No power to the port.
Solid Green	Logical link up
Flashing Green	Data activity flashing speed ≈ data transfer speed
Orange	Physical link up
Flashing Orange	A problem with the physical link Usually the SM is down or not enabling the port.

3.1.1.4 Power Supply Status Indicators

The IS50XX 36 Port Switch is available with one or two factory installed Power Supply Units. For switches with only one unit installed, a second Power Supply Unit can be added to increase security, hot-swap ability and to add redundancy. See Section E, “Replacement Parts Ordering Numbers,” on page 75 for ordering part numbers.

Figure 7: IS5030-2BRC QSFP Power Side Panel

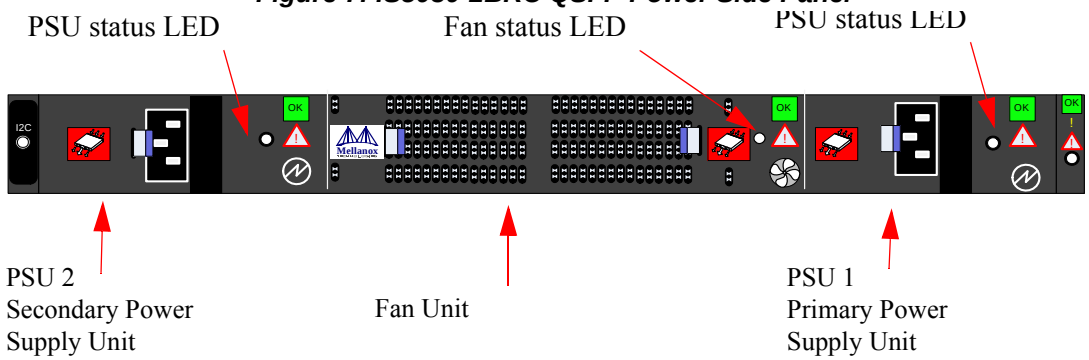

The primary power supply unit (PSU1) is located on the right side of the power side panel, with PSU2 on the left side. Each PSU has a single 2 color LED on the right side of the PSU, that indicates the internal status of the unit.

Figure 8: PSU Status LEDs

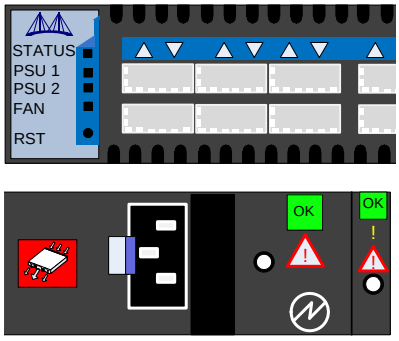

Table 6 - PSU Status LED Configurations

LED Configuration	FAN LED
Green	OK – The system is up and running.
Red	Error –One or more fans is not operating properly. The system should be powered down and troubleshoot the fan module.
Off	Off – The fan unit is not receiving any power. Check that the fan unit is properly and completely inserted.

Figure 5 on page 16 shows the explanation of the PSU Status LED colors.

Table 7 - PSU Status LED Configurations

LED Color	Status
Green	OK – The Power supply is delivering the correct voltage. 12VDC
Red	Error – The PSU is not operational
Off	Off – There is no power to the system (neither PSU is receiving power). If one PSU is showing green and the second PSU is unplugged it will show a red indication.

3.1.1.5 Fan Status Indicators

The indicator labeled “Fan” is located to the left of the QSFP connectors on the connector side panel. The following fan status conditions are possible:

Table 8 - Fan Status LED Configurations

LED Configuration	FAN LED
Green	OK – The system is up and running.
Red	Error –One or more fans is not operating properly. The system should be powered down and troubleshoot the fan module.
Off	Off – The fan unit is not receiving any power. Check that the fan unit is properly and completely inserted.

All fans must be operating while the power supply is plugged in.

If the switch shuts down due to over temperature, unplug the switch, wait 5 minutes and replug in the switch. For more information See “Troubleshooting” on page 49.

3.1.2 Reset Button

On the connector side panel under the system LEDs is a reset button. This reset button requires a tool to be pressed.

DO NOT use a sharp pointed object such as needle or push pin for pressing the Reset button. Sharp objects can cause damage, use a flat object to press this reset button.

Figure 9: Reset Button

Press the reset button to reset the main and management CPUs and to delete the existing password.

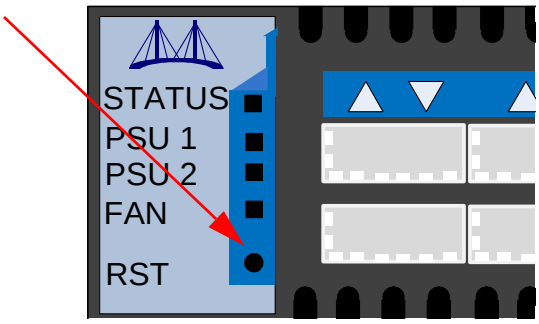

This button resets both the CPU of the switch device and the CPU of the management module. It thereby resets all of the ports by bringing them down and powering them up when the button is pushed. A quick push of this button performs this reset. When the button is held down for 15 seconds the switch is reset and the password is deleted. You will then be able to enter without a password and make a new password for the user admin.

In the externally managed switch the reset button resets the CPU of the switch device.

3.2 Air Flow

These switches can come with two air flow patterns. The two patterns are

- Connector side inlet to power side outlet
- Power side inlet to connector side outlet

The air flow is specified in the product model number. See “Mellanox Part Numbering Legend” on page 11. On the switch and fan modules the air flow direction can be seen on the power side panel.

Table 9 - Air Flow Direction

Picture	OPN Designation	Description
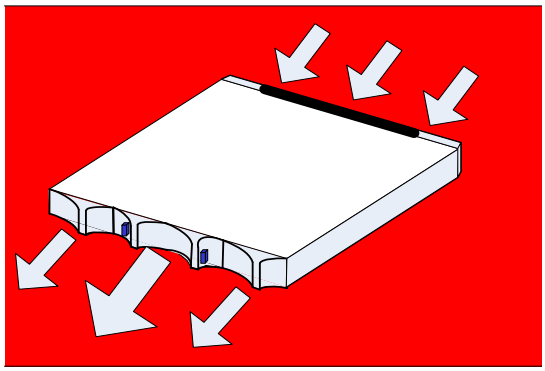	R	Connector side inlet to power side outlet
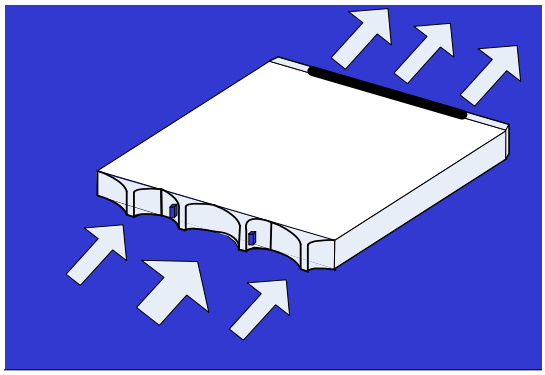	F	Power side inlet to connector side outlet

3.3 QSFP Cable Power Budget Classification

All MIS50XX QSFP switches are designed for a active cables with a max power per module of 2.W. This is power level 3 according to the QSFP Public Specification.

3.4 Interfaces

3.4.1 Port Connector Interfaces

3.4.1.1 36 Port Switches

The Connector side of the switch has 36 QSFP ports. These are placed in two rows, 18 ports to a row. The ports are labelled as shown in Figure 10. The bottom row ports are flipped from the top row. See Figure 11 for bottom row - top row port orientation.

Figure 10: Port Numbering

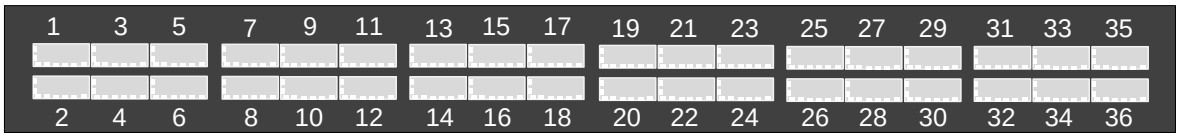

3.4.1.2 Top and Bottom Orientation

Figure 11: Top and Bottom Ports

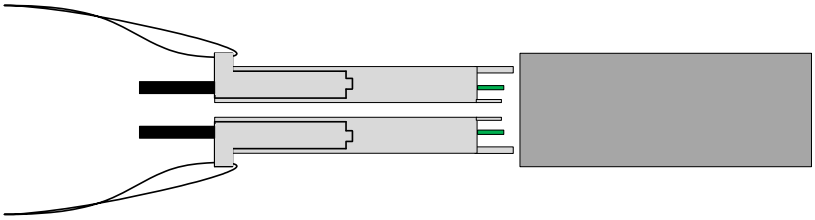

3.4.2 Management and FW updating Interfaces

There are three interfaces to connect to the IS50XX. They are:

- 1 or 2 connectors labelled “MGT”. Use these connectors to connect to the Ethernet. The IS5035 switch has two MGT connectors whereas the IS5030 has one.
- 1 USB port that is labelled . This interface can be used to update software or firmware.
- 1 connector that is labelled “CONSOLE”. Use this connector to connect to the host PC.

Figure 12: Management Interfaces

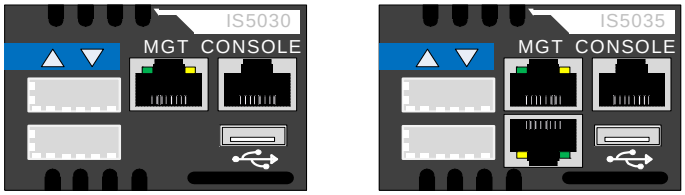

Internally Managed with chassis manager

Internally Managed with FabricIT manager

3.4.2.1 RJ-45 Connector (CONSOLE) Internally Managed Switches only

The port labelled “CONSOLE” is for a local host connection to the management module. This is used the first time the switch is connected. An HAR 000028 harness is included in the package to connect to a DB9 connection on a host PC. Connecting to a local host PC and following the instructions in the Installation Guide, “Configuring the Switch for the First Time”, must be done before any remote management is available. For the Socket pinout see “RJ45 CONSOLE Interface” on page 74.

This connector is not found in unmanaged (externally managed) switches.

3.4.2.2 RJ-45 Connector (I2C) Externally Managed Switches only

Figure 13: RJ45 I2C Connector

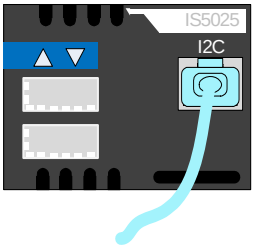

All firmware updates should be done in-band using Mellanox Firmware Management Tools.

This interface is for Debug and Troubleshooting only. This interface is for FAEs and advanced users only.

You will need to order an MTUSB-1 USB to I2C adapter to make use of the I2C interface. An HAR 000022 harness is included in the MTUSB-1 package to connect the switch for updating FW. The I2C connection provides access to Flash and EEPROMs. This connection allows access to the switch for updating FW. See Section 4.3.

3.4.2.3 RJ-45 Ethernet Connector (MGT) Internally Managed Switches

The Ethernet connection labelled “MGT” provides access for remote management. The IS50XX can be connected to an Ethernet switch or the Ethernet port of a computer.

The switch with the FabricIt management module has an extra Ethernet connector below the MGT connector shown in Figure 12.

Note: These connector(s) are not found in unmanaged (externally managed) switches.

Each Ethernet connector gets connected to Ethernet switches. These switches must be configured to 10/100M auto-negotiation.

The unmanaged switches are Plug and Play and all firmware updates should be done in-band. The I2C connection should only be used if the FW image was corrupted to the point that the regular FW tools cannot successfully reburn the correct image.

3.4.2.4 USB interface

FabricIT™ EFM Web User Interface (WebUI) or FabricIT™ EFM Command Line Interface (CLI).

There is a single USB connector. This connector can be used to install software and or firmware upgrades using a disc on key or similar memory device that has a USB connector.

This connector is not found on unmanaged (externally managed) switches.

3.4.2.5 I2C Interface

There is an I2C connector on the far left of the power side of the switch. **This interface is for Debug and Troubleshooting only.** This connector can be used to install firmware upgrades, should the FW image be damaged and cannot be upgraded through a host PC or remotely. This interface is for FAEs and advanced users only.

3.5 Package Contents

Before you install your new IS50XX switch, unpack the system and check to make sure that all the parts have been sent, check this against the parts list. Check the parts for visible damage that may have occurred during shipping.

The switch comes packed with the following items:

- 1) switch
- 1) power cable for each PSU– Type B 6ft US 125V 10A chord. See “Replacement Parts Ordering Numbers” on page 75. to order power cords for various countries. A single power cord for each power supply unit can be ordered at no extra charge.
- 1) rail kit; there are three options for the kit
  - MIS000079 – kit for a short switch in a shallow rack 38cm to 50cm
  - MIS000083 – kit for a short switch in a standard rack 50cm to 80cm
  - MIS000085 – kit for a standard switch in standard rack 50cm to 80cm

Note: Kit # MIS000085 is for standard depth switches only.

- 1) harness; HAR000028 – Harness for IS5025, IS5030 and IS5035 switches
- 1) “Thank you” page with pointers to relevant documents on the web and support page

Note: If anything is damaged or missing, contact your customer representative immediately.

3.6 Switch Platform Installation and Operation

Installation and initialization of the switch platform are straightforward processes, requiring attention to the normal mechanical, power, and thermal precautions for rack-mounted equipment.

The unmanaged (externally managed) switch platform does not require any programming or configuration to operate as a basic InfiniBand switch and includes all of the necessary functionality to operate with external standard InfiniBand Subnet Management software.

The managed switch platform requires initial configuration to operate as an InfiniBand switch. All internally managed switches come with an internal PPC based management board. This board allows for internally managing the switch through a host PC or remotely through the Ethernet.

3.6.1 Installation Safety Warnings

For Safety Warnings in French see Section F,"Avertissements de sécurité d'installation (French)," on page 76, for German see Section G,"Installation - Sicherheitshinweise (German)," on page 78, and for Spanish see Section H,"Advertencias de seguridad para la instalación (Spanish)," on page 80.

For special regulations regarding Finland, Sweden, Denmark, and Norway see Section I,"Special Regulations Regarding Finland, Sweden, Denmark, and Norway," on page 83.

1. **Installation Instructions**

Read all installation instructions before connecting the equipment to the power source.

2. **Over-temperature**

This equipment should not be operated in an area with an ambient temperature exceeding the maximum recommended: 45°C (113°F). Moreover, to guarantee proper air flow, allow at least 8cm (3 inches) of clearance around the ventilation openings.

3. **Stacking the Chassis**

The chassis should not be stacked on any other equipment. If the chassis falls, it can cause bodily injury and equipment damage.

4. **Redundant Power Supply Connection - Electrical Hazard**

This product includes a blank cover over the space for the redundant power supply. Do not operate the product if the blank cover is not securely fastened or if it is removed.

5. **During Lightning - Electrical Hazard**

During periods of lightning activity, do not work on the equipment or connect or disconnect cables.

6. Copper InfiniBand Cable Connecting/Disconnecting

Copper InfiniBand cables are heavy and not flexible, as such they should be carefully attached to or detached from the connectors. Refer to the cable manufacturer for special warnings and instructions.

7. Rack Mounting and Servicing

When this product is mounted or serviced in a rack, special precautions must be taken to ensure that the system remains stable. In general you should fill the rack with equipment starting from the bottom to the top.

8. Equipment Installation

This equipment should be installed, replaced, or serviced only by trained and qualified personnel.

9. Equipment Disposal

Disposal of this equipment should be in accordance to all national laws and regulations.

10. Local and National Electrical Codes

This equipment should be installed in compliance with local and national electrical codes.

11. Do Not Use The Switch As A Shelf Or Work Space.

Caution: Slide/rail mounted equipment is not to be used as a shelf or a work space.

3.6.2 Mechanical Installation

The procedure for installing the switch in a full rack while bringing the power cord across along side of the switch can be found in See “Passing the Power Cord From the Connector Side to the Power Side” on page 61.

The switch platform can be rack mounted and is designed for installation in a standard 19” rack. The power side of the switch includes a hot-swap power supply module, a blank cover for an optional second PSU for redundancy, and a hot-swap fan tray. There are two possible air flow directions. Be sure that the switch air flow direction is compatible with your system, rack, and

PSUs. The connector side of the switch has the QSFP ports, system LEDs, and management connection ports.

The switch platform contains auto-sensing 100 - 240 VAC connections for all possible PSUs.

The installer should use a rack capable of supporting the mechanical and environmental characteristics of a fully populated platform.

The rack mounting holes conform to the EIA-310 standard for 19-inch racks. Take precautions to guarantee proper ventilation in order to maintain good airflow at ambient temperature. Cable routing in particular should not impede the air exhaust from the chassis.

3.6.2.1 Minimum and Maximum Rack Depth for this Switch

The short switch with the MIS000079 Rail kit can only go into a 19” rack whose vertical supports are between 380mm and 500mm apart.

To use the IS50XX in a rack deeper than 500mm, order the IS50XX with the standard depth, or order the MIS000083 rail kit. The both of these solutions will allow you to install the switch in a 19” rack whose vertical supports are between 500mm and 800mm apart.

The standard depth switch uses the MIS000085 rail kit for installation in a 19” rack whose vertical supports are between 500mm and 800mm apart.

3.6.2.2 Installing the Switch in the Rack

Tools and Customer Supplied Parts

- Phillips Screwdrivers #1 and #2
- ESD strap
- ESD mat
- Grounding screw
- Grounding wire sufficient to reach a valid ground.

Figure 14: Rack Rail Kit Parts MIS00083/85

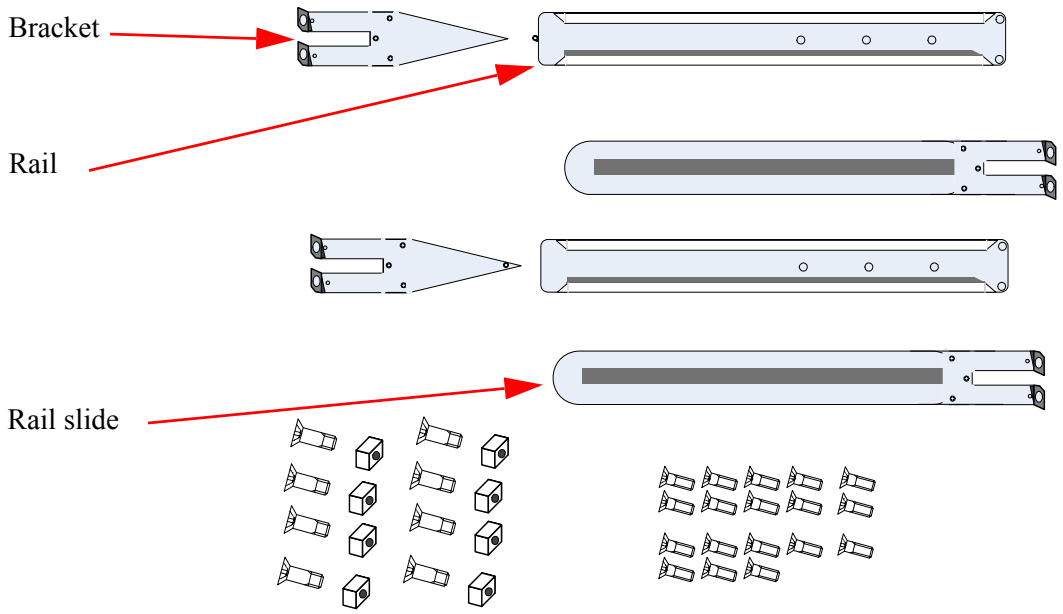

Make sure that the Rail kit is compatible with your rack.

For short depth switches, rail kit # MIS00083 is to be used for racks from 50cm to 80cm deep, and rail kit # MIS00079 is to be used for racks from 38cm to 50cm deep including the iDataPlex rack.

For standard depth switches rail kit # MIS00085 is to be used for racks from 60cm to 80cm deep.

Parts included in the rail kit:

- 2 rails
- 2 rail slides
- 2 brackets
- 18 recessed flat head screws
- 8 caged nuts
- 8 pan head screws M6

Figure 15: Rack Rail Kit Parts MIS000079

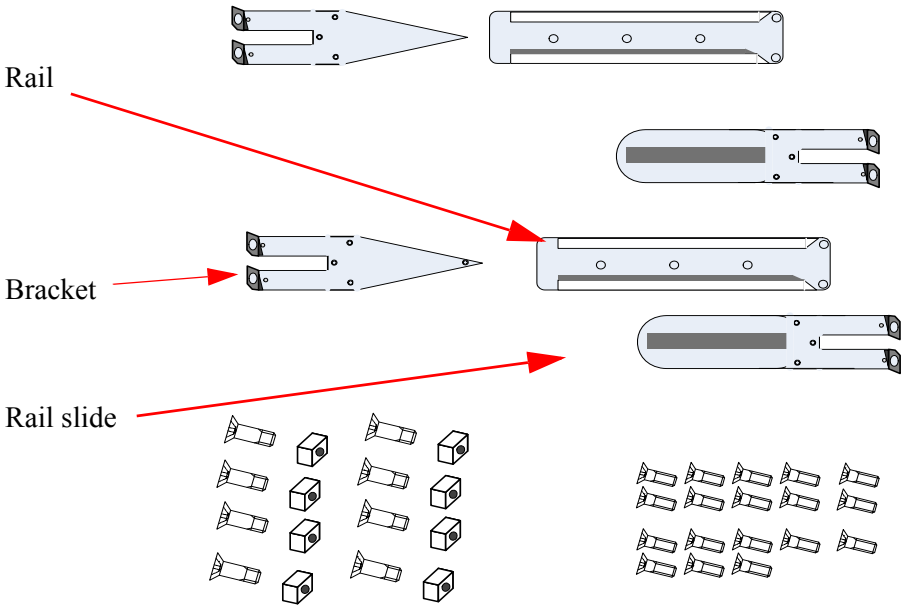

1. Place the ESD mat on the floor where you will be working and put on the ESD strap. Make sure the ESD strap is touching your skin and that the other end is connected to a verified ground.
2. Choose which side of the switch you want even with the rack vertical support. Either the side with the power supply units or the side with the IB connectors can be even with one of the vertical rack supports. Short switches have the OPN character -B and are 1.716” (1U) H x 17.17” W x16.84” D 43.6mm X 436.2mm X 427.7mm. Standard switches have the OPN character -S and are 1.716” (1U) H x 17.17” W x24.71” D 43.6mm X 436.2mm X 627.7 mm. Things to consider before choosing where to mount the rails and rail slides.
   - Air flow
   - Configuration of already installed equipment
   - Cable bending radius

   The distance between the rack and the door can be as little as 4 cm on one side of the rack and as much as 18 cm on the other side of the rack. Keep in mind that there can be as many as 36 cables connected to the switch.
   - Do you want the connector side recessed in the rack to allow for a larger cable bending radius?
   - Will the connector side be recessed past other equipment in the rack and will this be problematic?

Figure 16: Installation Options Available for Short Switches

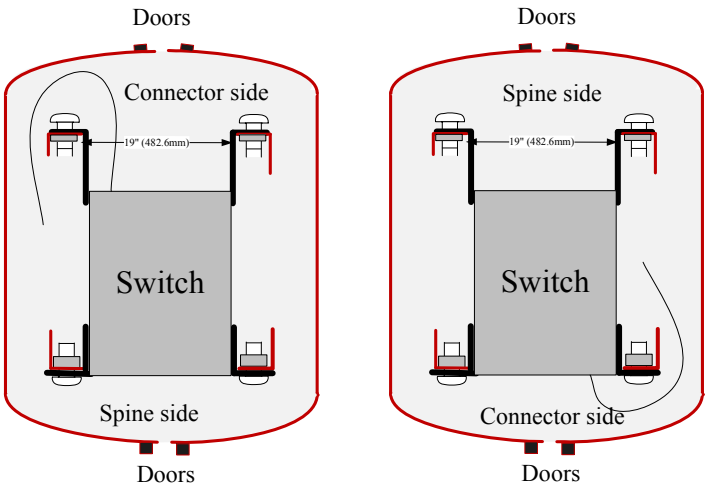

Figure 17: Installation Options Available for Standard Length Switches

24.71” or 627.6mm deep

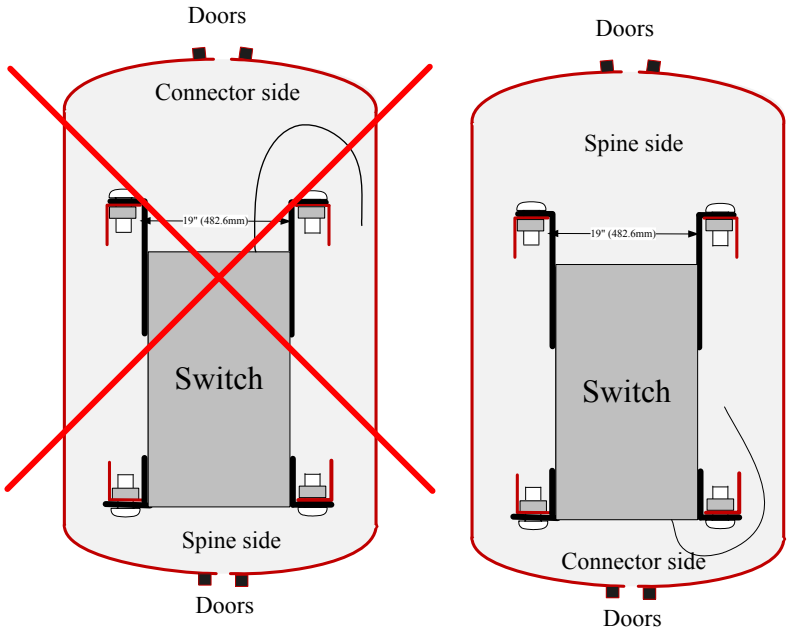

Installation A Installation B

Standard switches only support installation with the connector side of the switch near the rack door, as per installation B in Figure 17.

Figure 18: For Short Switches Which Side of the Rack Do You Want the Connectors ?

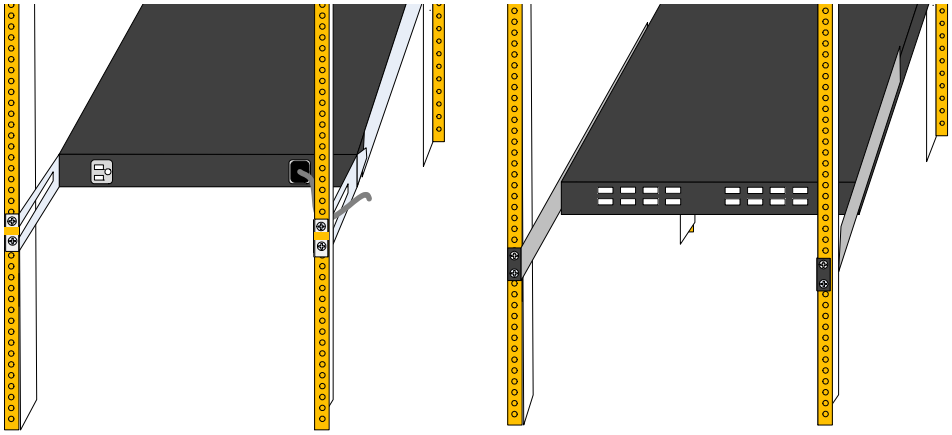

The figure above shows the power side next to the door and the connector side away from the door. This configuration has more room for the cables and a larger bending radius.

This configuration is not supported for standard length switches (24.71” or 627.6mm deep).

The figure below shows the connector side next to the door and the power side away from the door. This configuration may be necessary to conform to your rack configuration.

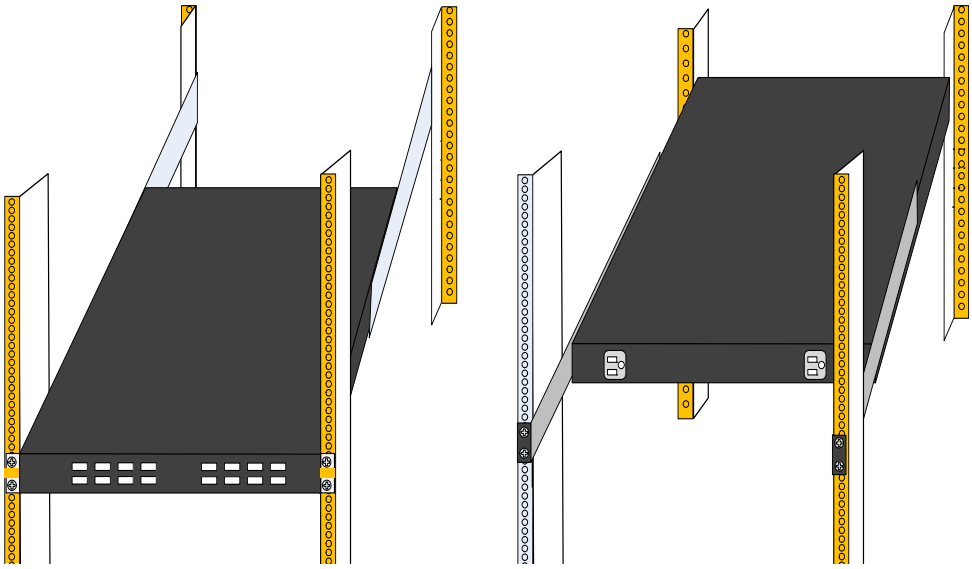

3. Screw the brackets onto the switch. Use the flat head screws to connect the bracket. There are two options for mounting the bracket. One option will place the switch even with the vertical support of the rack and the second option will recess the switch further into the rack. If you

are using the second option insert the power cable before screwing the bracket to the vertical support.

If you need to bring the Power cord from the other side of the rack, recess the switch and run the Power cord through the bracket, also using the slot in the rail slide. Go to “Passing the Power Cord From the Connector Side to the Power Side” on page 61 for detailed instructions on routing the power cord from the power side to the connector side.

Figure 19: Making Room for the Power Cord

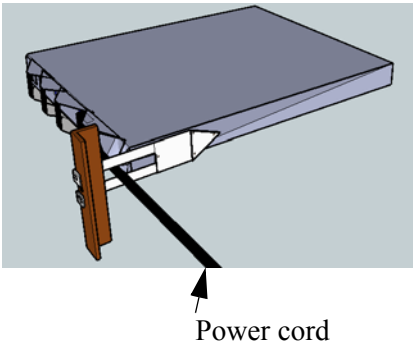

Figure 20: Screwing on the Bracket

Option A

Option A puts the front of the switch ~5cm behind the rack vertical support

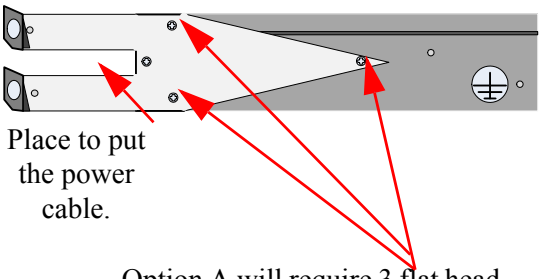

Option A will require 3 flat head screws

This configuration also allows you to put the power cord through the bracket.

Option B

Option B puts the front of the switch even with the rack vertical support

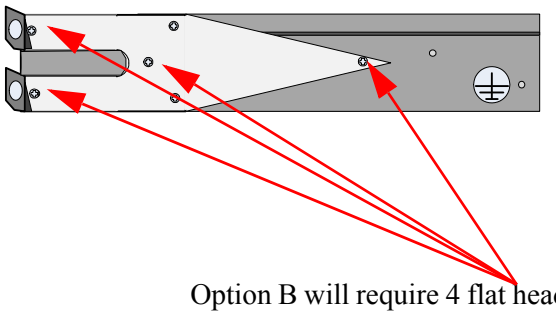

Option B will require 4 flat head screws

The side of the switch with these brackets will be the side that is even with or very close to the vertical rack support.

4. Screw the rails onto the switch. Use 5 flat head screws to connect each rail to the switch.

Figure 21: Screwing on the Rail

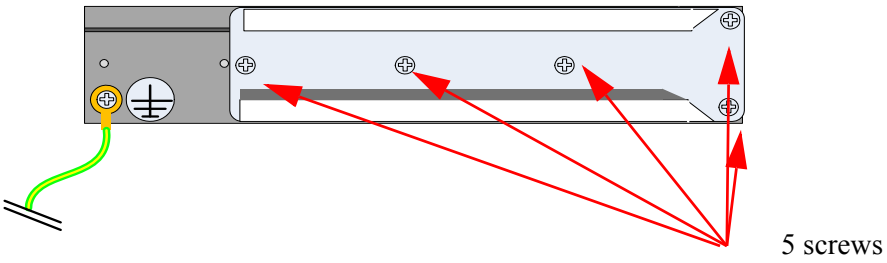

5. Clip the 4 caged nuts into the holes in the rack you will be using to connect the rail slides. Check that both sides of the switch, left and right, are the same level in the rack.

Figure 22: Inserting the Caged Nuts

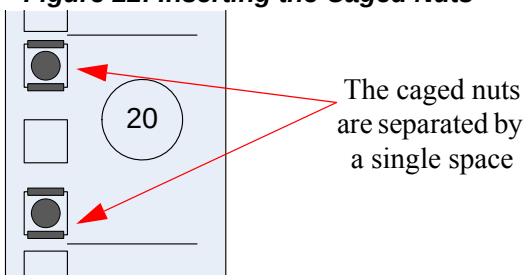

6. Clip 4 more caged nuts into the holes in the rack you will be using to connect the brackets. Check that both sides of the switch, power side and connector side, are at the same level in the rack.
7. Using two of the bolts for each rail slide, install the rail slides.
8. Tighten the bolts to 9.2 Nm or 81.5 pound inches. If the power cable is on this side of the switch, feed the power cable into the slot in the rail slide before screwing it to the vertical support.

Figure 23: Connect Bracket to Rack Vertical support

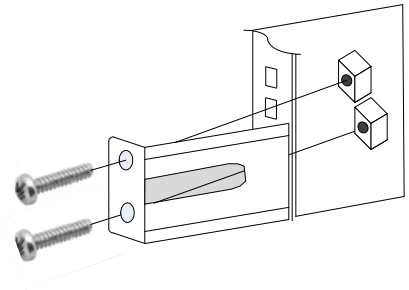

9. Place the four bolts for the caged nuts within reach.
10. Slide the switch into the rails.
11. Put the switch into place and screw the bolts into the nuts from step 6. If the power cable is on this side of the switch, feed the power cable into the slot in the bracket before screwing it to the vertical support.Tighten the bolts to 9.2 Nm or 81.5 pound inches.
12. Tighten all of the screws to 9.2 Nm or 81.5 pound inches.
13. Ground the switch
14. Plug in the power cables.
15. Check the Status LEDs and confirm that all of the LEDs show status lights consistent with normal operation.

Warning: Any yellow status LEDs is cause for concern and must be dealt with immediately.

It can take up to 5 minutes to boot up, during which time the status LED may indicate red.

16. You can start connecting all of the cables to the switch.

3.6.3 Grounding the Switch

Check to determine if your local or national electrical codes require an external ground to all IT components. If so, connect a ground wire to one of the casing screws and connect the other end to a valid ground. If you choose to not use the ground screw, make sure that the rack is properly grounded and that there is a valid ground connection between the chassis of the switch and the rack. Test the ground using an Ohm meter.

Some national and/or local codes may require IT components to be bonded and externally grounded (not including the power cord ground). You must follow all national and local codes when installing this equipment.

Figure 24: Ground Connection

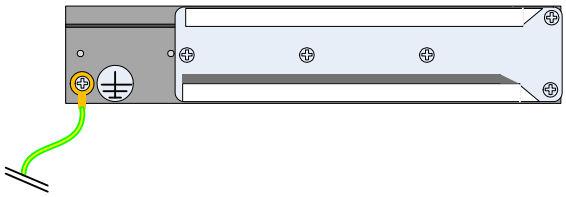

3.6.4 Power Connections and Initial Power On

The switch platform ships with one or two Power Supply Units. For switches with only one unit installed, a second PSU may be installed at a later time. Each supply has a separate AC receptacle. The input voltage is auto-adjusting for 100 - 240 VAC, 50-60Hz power connections. The power cords should be standard 3-wire AC power cords including a safety ground and rated for 15A or higher.

Caution: The switch platform will automatically power on when AC power is applied. There is no power switch. Check all boards, power supplies, and fan tray modules for proper insertion before plugging in a power cable.

Caution: After inserting a power cable and confirming the green system status LED light is on; make sure that the Fan Status indicator shows green.

If the fan status indicator is not green then unplug the power connection and check that the fan module is inserted properly and that the mating connector of the fan unit is free of any dirt and/or obstacles.

Caution: When turning off the switch, make sure **ALL LEDS** are off to ensure a powered down status.

Do not hot swap the power supply if your switch has only one power supply. You must power down the system to replace the power supply unit when there is only one PSU in the switch.

Figure 25: Two Power Inlets - Electric Caution Notifications

CAUTION	ACHTUNG	ATTENTION
Risk of electric shock and energy hazard. The two PSUs are independent. Disconnect all power supplies to ensure a powered down state inside of the switch platform.	Gafahr des elektrischen Schocks. Entferrnen des Netzsteckers elnes Netzteils spannungsfrei. Um alle Einhieten spannungsfrei zu machen sind die Netzstecker aller Netzteile zu entfernen	Risque de choc et de danger e'lectriques. Le de'branchment d'une seule alimentation stabilise'e ne de'branch uniquement qu'un module "Alimentation Stabilise'e". Pour isoler completement le module en cause, Il faut de'brancher toutes les alimentations stabilise'es.

3.6.5 Extracting and Inserting the Power Supply Unit

With both power supplies installed in the redundant configuration, either PSU may be extracted without bringing down the system.

Make sure that the PSU that you are NOT replacing is showing all green, for both the PSU and status indicators.

Power supply units have directional air flows similar to the fan module. The Fan module airflow must coincide with the airflow of all of the PSUs. If the PSU airflow direction is different from the fan module airflow direction the system will shut down.

Figure 26: Power Supply Unit Extraction

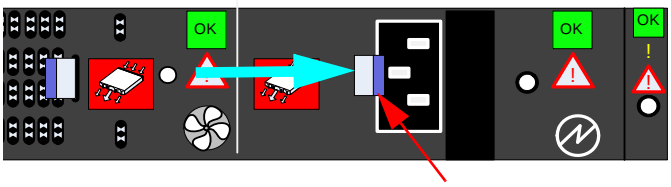

Figure 27: PSU Pulled Out

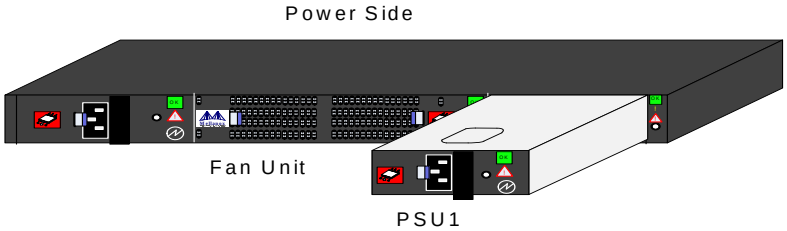

To extract a PSU:

1. Remove the power cord from the power supply unit.
2. Grasping the handle with your right hand, push the latch release with your thumb while pulling the handle outward. As the PSU unseats, the PSU status indicators will turn off.
3. Remove the PSU.

To insert a PSU:

1. Make sure the mating connector of the new unit is free of any dirt and/or obstacles.

Do not attempt to insert a PSU with a power cord connected to it.

2. Insert the PSU by sliding it into the opening until a slight resistance is felt.
3. Continue pressing the PSU until it seats completely. The latch will snap into place confirming the proper installation.
4. Insert the power cord into the supply connector.
5. Insert the other end of the power cord into an outlet of the correct voltage.

The green PSU indicator should light. If not, repeat the whole procedure to extract the PSU and re-insert it.

3.6.6 InfiniBand Cable Installation

All cables can be inserted or removed with the unit powered on. To insert a cable, press the connector into the port receptacle until the connector is firmly seated. The GREEN LED indicator, corresponding to each QSFP port, will light when the physical connection is established (that is, when the unit is powered on and a cable is plugged into the port with the other end of the connector plugged into a functioning port). After plugging in a cable, lock the connector using the latching mechanism particular to the cable vendor. When a logical connection is made the yellow light will come on. When data is being transferred the yellow light will blink.

Cables in the bottom row should be inserted upside down in relation to the how the cables are inserted in the top row.

Figure 28: Top and Bottom Ports

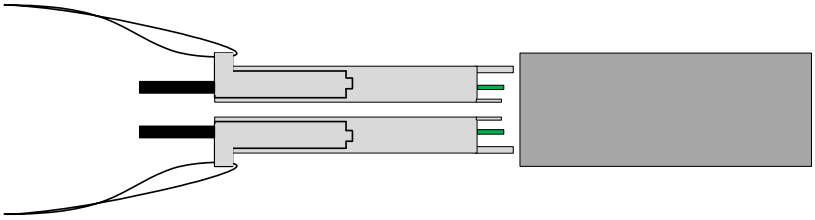

To remove, disengage the locks and slowly pull the connector away from the port receptacle. Both LED indicators will turn off when the cable is unseated.

Care should be taken not to impede the air exhaust flow through the ventilation holes next to the InfiniBand ports. Cable lengths should be used which allow for routing horizontally around to the side of the chassis before bending upward or downward in the rack.

3.6.7 Extracting and Inserting the Fan Unit

This switch can operate indefinitely with one of the three fans in the fan module inoperable so long as the ambient temperature is below 45° Celsius.

Operation without a fan unit should not exceed two minutes.

During fan hot-swap, if both indicators are OFF then the fan unit is disconnected.

There are two possible air flows for the fan unit. The air flow depends on the switch model. An R in the model number indicates a reverse air flow. See “Air Flow” on page 20. for an explanation of the model numbers and labels.

Make sure that the fans have the air flow that matches the model number. An air flow opposite to the switch design will cause the switch to operate at a higher (less than optimal) temperature.

Figure 29: Air Flow Labels

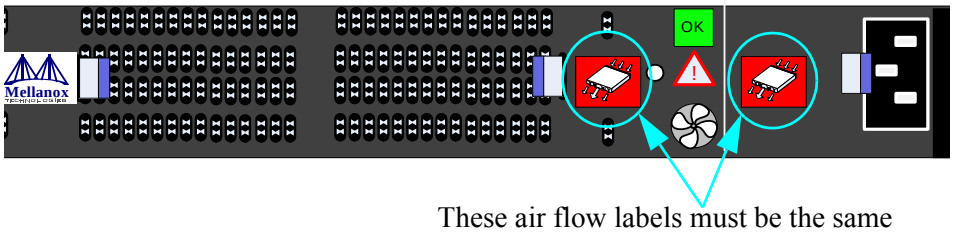

To extract a Fan Unit

1. Using two hands, push both latch releases simultaneously while pulling the fan module out of the switch. As the fan unseats, the fan status indicator will turn off.

Figure 30: Fan Module Latches

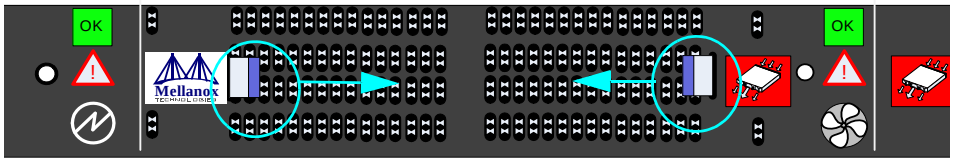

These two latches must be pushed towards each other at the same time while the module is pulled out.

To insert a FAN Unit:

1. Make sure the mating connector of the new unit is free of any dirt and/or obstacles.
2. Insert the fan unit by sliding it into the opening until slight resistance is felt. Continue pressing the fan unit until it seats completely.

3.7 Disassembly of the Switch from the Rack

The green fan status indicator should light. If not, extract the fan unit and reinsert it. After two unsuccessful attempts to install the fan unit, power off the switch before attempting any system debug.

To disassemble the switch from the rack:

1. Unplug and remove all connectors.
2. Unplug all power cords.
3. Remove the ground wire.
4. Unscrew the 4 bolts from the side of the switch with the bracket. bracket

Support the weight of the switch when you remove the screws so that the switch does not fall.

5. Slide the switch from the rack.
6. Remove the rail slides from the rack.
7. Remove the eight caged nuts.

3.8 Disposal

For proper disassembly instructions to comply with the WEEE Directive 2002/96/EC see the Mellanox website.

According to the WEEE Directive 2002/96/EC, all waste electrical and electronic equipment (EEE) should be collected separately and not disposed of with regular household waste.

Dispose of this product and all of its parts in a responsible and environmentally friendly way.

4 Management and Tools Overview

The Ethernet ports for remote management connect to Ethernet switches. These switches must be configured to 10/100M auto-negotiation.

4.1 Network Management and Clustering Software

Download and install, on all nodes, the Mellanox OpenFabric software package for Linux, Windows, or other operating systems from the Mellanox software website:

http://www.mellanox.com.=> Downloads => InfiniBand SW/Drivers.

This software package provides connectivity for server and storage systems utilizing High Performance Computing (HPC) or enterprise data center (EDC) applications across an InfiniBand fabric. It also provides a subnet manager for simple network configuration and network administration and diagnostic tools for network management.

4.2 Internally Managed Switch System

The managed switches come standard with management software module for chassis management.

IS5030/1 switches are pre-installed with a license of up to 108 nodes. IS5035 switch is pre-installed with a license of up to 648 nodes. If there is a need to support more than 648 nodes, an optional license of Unified Fabric Manager™ (UFM™) is needed.

Management modules will have the capability to allow remote monitoring and remote management of the chassis from any host connected to the fabric.

The managed switch system includes a CPU which contains:

- embedded OS, secure in-band, out-band access
- chassis manager and system BIST
- SNMP agent, 3rd party tool integration
- GUI
- Subnet Manager (SM)

The chassis manager will give the user access to:

- switch temperatures
- power supply voltages
- fan unit information
- power unit information
- Flash memory

The manager also has the ability to burn new firmware on the switch.

4.2.1 Subnet Management

The Subnet management features include:

- upgrading drivers
- upgrading software
- monitoring of:
  - AC power to the PSUs
  - DC power out from the PSUs
  - board temperature
  - fan module unit
  - failure in the switch system
  - system failure in the switch system
- querying for board serial numbers and their revisions

In addition, the tools enable firmware management capabilities such as:

- querying for existing firmware versions
- burning new firmware (from scratch or for recovery from damaged firmware)
- querying for and changing system GUIDs
- checking for duplicate or bad GUIDs

4.2.2 Fabric Management with UFM

For an added licensing fee you can purchase Mellanox's Unified Fabric. UFM is a powerful platform for managing scale-out computing environments. it enables data center operators to efficiently monitor and operate the entire fabric, boost application performance and maximize fabric resources utilization.

UFM provide a central management console including the following main features:

- Fabric dashboard including Fabric Congestion Map
- Advance Fabric-wide real-time and history monitoring
- Quality of Service
- Traffic Aware Routing Algorithm (TARA)
- Central Device Management
- Task automation
- Threshold based alerts
- Fabric segmentation/isolation
- Logging
- High-Availability

4.2.3 Configuring the Switch for the First Time

Unmanaged (Externally managed) switches, that is the IS5025 switches, do not get configured. On unmanaged switches, the CONSOLE, Ethernet, and USB connectors are not found. Instead there is an I2C connector.

See the Installation Guide of the IS50XX switch, “Configuring the Switch for the First Time”. The port labelled CONSOLE must be connected to a local host PC. This must be used the first time the switch is connected. This must be done before any remote management is available.

Hook up the supplied harness cable (HAR00028) from the connector labelled CONSOLE to the DB9 connector of the local host PC.

Figure 31: Host Connection

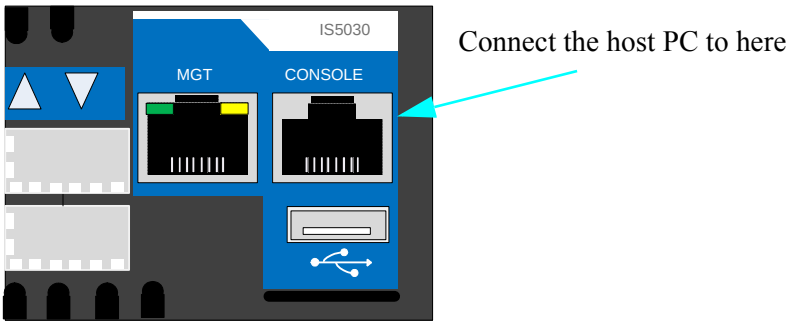

4.2.4 Starting a Remote Connection to the Switch

4.2.4.1 Accessing the CPU via the Ethernet Connector

Once the initial configuration is completed the management tools can be accessed through:

- SSH
- Telnet
- the WEB

4.2.5 Downloading Firmware

Firmware for this switch system can be found at and downloaded from:
http://www.mellanox.com => Downloads => Firmware.

Be sure to read and follow all of the instructions regarding the updating of the firmware on your switch system. Firmware for the HCA cards connected to this switch system can be downloaded from the same site.

4.3 Unmanaged (Externally Managed) Switch

When using Mellanox 5025 (Unmanaged) switch as the single switch in the fabric, the switch requires a host based management solution.

4.3.1 I2C Connector

The I2C connection provides access to Flash and EEPROMs. This connection allows access to the switch for updating FW when in-band FW updating is impossible.

Unmanaged (Externally managed) switches, that is the IS5025 switches, do not get configured. On unmanaged switches, the CONSOLE, Ethernet, and USB connectors are not found. Instead there is an I2C connector. The I2C connector should only be used when the FW cannot be updated in-band.

The unmanaged switches are Plug and Play and all firmware updates should be done in-band. The I2C connection should only be used if the FW image was corrupted to the point that the regular FW tools cannot successfully reburn the correct image.

Note: The RJ45 to DB9 harness 22 in the box with the switch, is for use with the MTUSB-1 adapter. This is necessary only when updating FW cannot be updated in-band.

This interface is for Debug and Troubleshooting only. This interface is for FAEs and advanced users only.

When you install the switch, it comes with the latest firmware burned on the board. All firmware updates should be done in-band. This is only done when you receive an email that a newer FW version for your switch is available. Download the latest FW from http://www.mellanox.com => Downloads => Firmware. For instructions on downloading FW see http://www.mellanox.com => Downloads => Firmware Tools. Be sure to download the user manual appropriate to your OS. Read the instructions in the User manual for the FW update procedure.

4.3.2 Current Firmware Revision

The user can query for the currently loaded firmware revision by using the command:

```
[root@eagle1 ~]# mst start
Starting MST (Mellanox Software Tools) driver set
Loading MST PCI module - Success
Loading MST PCI configuration module - Success
Create devices
[root@eagle1 ~]# mst ib add
-I- Discovering the fabric - Running: ibdiagnet -skip all
mst-I- Added 14 in-band devices
[root@eagle1 ~]# mst status
MST modules:
```

```
------------
   MST PCI module loaded
   MST PCI configuration module loaded

MST devices:
------------
/dev/mst/mt26428_pciconf0       - PCI configuration cycles access.
                        bus:dev.fn=04:00.0 addr.reg=88 data.reg=92
                        Chip revision is: B0
/dev/mst/mt26428_pci_cr0        - PCI direct access.
                        bus:dev.fn=04:00.0 bar=0xca200000 size=0x100000
                        Chip revision is: B0

Inband devices:
------------------
/dev/mst/CA_MT25418_eagle8_HCA-1_lid-0x0068
/dev/mst/SW_MT48438_IS5030-Ranana-2_lid-0x0001
/dev/mst/SW_MT48438_IS5030-Ranana_lid-0x0002
[root@eagle1 ~]# flint -d /dev/mst/SW_MT48438_IS5030-Ranana_lid-0x0002 -qq q

-W- Running quick query - Skipping full image integrity checks.

Image type:     FS2
FW Version:     7.4.2200
Device ID:      48438
Description:    Node          Sys image
GUIDs:          0002c902004429e8 0002c902004429eb
Board ID:       n/a (MT_0D00110012)
VSD:            n/a
PSID:           MT_0D00110012
```

Other tools like flint can also be useful.

4.3.2.1 Instructions for Reprogramming Over the InfiniBand Network

To update an InfiniScale IV switch device having a specific GUID (for example, 0x00000006660abcd0) or LID, the following are the recommended steps to update the device firmware.

1. Make sure all subnet ports are in the active state. One way to check this is to run opensm, the Subnet Manager.

   ```
   [root@mymach]> /etc/init.d/opensmd start
   opensm start      [  OK  ]
   ```

2. Make sure the local ports are active by running ‘ibv_devinfo’.
3. Obtain the device LID.

1. Use the “mst ib add” command:

The “mst ib add” runs the ibdiagnet/ibdiscover tool to discover the InfiniBand fabric and then lists the discovered IB nodes as an mst device under /dev/mst/ directory. These devices can be used for access by other MFT tools.

```
[root@mymach]> mst ib add
```

```
-I- Discovering the fabric - Running: ibdiagnet -skip all
-I- Added 10 in-band devices
```

2. List the discovered mst inband devices run "mst status".

```
[root@mymach]> mst status
MST modules:
------------
   MST PCI module loaded
   MST PCI configuration module loaded
...
Inband devices:
------------------
/dev/mst/CA_MT25418_sw005_HCA-1_lid-0x0001
/dev/mst/SW_MT47396_lid-0x0011
/dev/mst/SW_MT48438_lid-0x0003
```

Identify the switch you want to update according to its description or its LID.

in the examples below we will use `SW_MT48438_lid-0x0003 as our target switch.`

Query the switch to determine the current firmware version:

```
[root@mymach]> flint -d /dev/mst/SW_MT48438_lid-0x0003 q
Image type:      FS2
firmware Version:     7.3.0
Device ID:      48438
Chip Revision:   A0
Description:    Node          Sys image
GUIDs:          0002c902004177d8 0002c902004177db
Board ID:       n/a (MT_0D00110012)
VSD:            n/a
PSID:           MT_0D00110012
```

Burn the Infiniscale IV switch:

```
flint -d /dev/mst/SW_MT48438_lid-0x0003 -i ./fw-IS4-rel-7_4_0-Q_A1.bin -qq b
```

4.3.2.2 Reprogramming the Switch Through The I2C Port

This interface is for Debug and Troubleshooting only. This interface is for FAEs and advanced users only.

The I2C connector should only be used when the firmware cannot be updated in-band.

Use the MTUSB-1 adapter (available from Mellanox) to reprogram the switch firmware using a server or PC running MFT.

Figure 32: MTUSB-1 with Cables

The MTUSB adapter comes with three cables, but has only two connections for cables. One cable is an I2C cable with DB9 female connectors on both ends. One cable is a I2C cable with DB9 female connector to RJ45 male. Use the cable that matches your switch. The other is a USB cable with one type A host connection to be connected to the server or PC and a type B connection to be connected to the MTUSB adapter.

Figure 33: I2C Cable Connected to IS5025

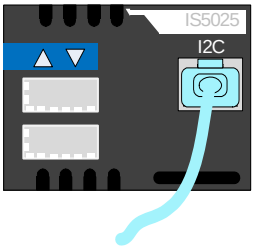

With the switch connected to a computer through the MTUSB, it is now possible to reprogram the SPI Flash memory.

4.3.2.3 Instructions for Reprogramming Through the I2C Port:

1. Make sure that:
   - the MTUSB I2C cable is connected to the switch and USB cable is connected to a computer
   - MFT is running on the computer
   - "mtusb-1" mst device appears in "mst status"
2. Set the switch I2C switch to allow access by running:

```
> mlxi2c -d /dev/mst/mtusb-1 -s IS5025 p /IS4
```

3. Run the burn command:

```
flint -d /dev/mst/mtusb-1 -i ./fw-IS4-rel-7_0_142-Q_A1.bin -qq b
```

4. Power cycle the switch, by unplugging and re-plugging the power cord, to load the new firmware.

4.3.3 How to Get Mellanox Firmware Tools (MFT)

Mellanox Firmware Tools (MFT) and documentation are available for download via http://www.mellanox.com > Downloads > Firmware Tools.

The MFT kit includes:

- mlxburn
- flint
- spark
- IBspark
- debug utilities

See “Related Documentation” on page 7.

4.3.4 Open SM

To manage the Mellanox switch system using OFED, download Mellanox Open Fabrics from http://www.mellanox.com > Downloads > InfiniBandSW/Drivers.

Be sure to read and follow all of the instructions regarding the installation and use of these tools.

Each InfiniBand subnet needs one subnet manager to discover, activate and manage the subnet.

An InfiniBand® network requires a Subnet Manager to be running in either the Infiniband switch itself (switch based) or on one of the nodes which is connected to the Infiniband fabric (host based).

The InfiniBand subnet manager (OpenSM) assigns Local IDentifiers (LIDs) to each port connected to the InfiniBand fabric, and develops a routing table based on the assigned LIDs.

A typical InfiniBand installation using the OFED package will run the OpenSM subnet manager at system start up after the OpenIB drivers are loaded. This automatic OpenSM is resident in memory, and sweeps the InfiniBand fabric approximately every 5 seconds for new InfiniBand adapters to add to the subnet routing tables.

4.4 Updating Firmware on Managed Switches

When you buy the switch, it comes with the latest firmware burned on the board. All firmware updates should be done through the management software. Go to the Mellanox Website and confirm that the firmware is the latest. If not reburn the latest firmware from the download site. New firmware versions will be posted on the Mellanox firmware download page: http://www.mellanox.com => Support > Download Center.

You will also need to download and unzip the firmware binary image. This is provided in the Mellanox Web site at: http://www.mellanox.com => Support > Download Center and go to the InfiniScale IV Switch systems. Click in the Table for the firmware image that you need.

5 Troubleshooting

As soon as a switch is plugged in make sure that the green power LEDs on the PSUs are on.

Status LED and or Status Health LED

If either of these two LEDs is **red** unplug the switch and call your Mellanox representative.

Power supply unit:

If the LED on the PSU is not lit or is red, check that the power cable is plugged into a working outlet.

1. Check that the power cable has a voltage within the range of 100 - 240 volts AC.
2. Check that the air flow direction of the PSUs are consistent with the Fan module air flow.
3. Remove and reinstall the power cable.
4. Remove and reinstall the PSU.

The power LED for the switch shuts off:

1. Check that the there is adequate ventilation. Are the fan LEDs showing that the fans are all up and running?
2. Make sure that there is nothing blocking the front or rear of the chassis and that the fan modules and ventilation holes are not blocked (especially dust over the holes).
3. If you find dust blocking the holes it is recommended to clean the fan unit and remove the dust from the front and rear panels of the switch using a vacuum cleaner.

The green power LED for the fans does not come on:

1. Check that the Power LEDs are on.
2. Remove and reinstall the fan unit. Make sure the mating connector of the new unit is free of any dirt and/or obstacles. See Section 3.6.7, “Extracting and Inserting the Fan Unit,” on page 38.

Caution: Do not run the switch if the System Status LED for the Fans is Yellow!

The link LED for the InfiniBand connector does not come on:

1. Check that both ends of the cable are connected.
2. Check that the locks on the ends are secured.
3. Make sure that the latest FW version is installed on both the HCA and the switch.
4. If media adapters are used, check that the all connections are good, tight, and secure.

The activity LED does not come on:

Check that the Subnet Manager has been started.

The switch is off:

1. Unplug the switch.
2. Wait 5 minutes.
3. Plug in the switch.
4. If the switch does not come on, check the power supplies.

5. If the switch comes on, Use the FabricIT management CLI or Web GUI to determine the cause of the Shutdown.
6. Check the temperature.
7. Check the Fan status.

The switch is not working and unresponsive:

1. Reset the switch.

If resetting the switch does not work:

1. Unplug the switch.
2. Wait 5 minutes.
3. Plug in the switch.
4. If the switch does not come on, check the power supplies.
5. If the switch comes on, use the FabricIT management CLI or Web GUI to determine the cause of the shutdown.

The last software update did not succeed:

1. Connect the RS232 connector (CONSOLE) to a laptop.
2. Push the reset button on the switch or management module.
3. You will have ~ 5 seconds to stop the U-Boot by pressing Control-B.
4. Choose the image to upload. Only use image 1 or image 2.

```
U-Boot 2009.01-mlnx1.4 (May 12 2010 - 14:08:15)

CPU:   AMCC PowerPC 460EX Rev. A at 1000 MHz (PLB=200, OPB=100, EBC=100
MHz)
      Security/Kasumi support
      Bootstrap Option H - Boot ROM Location I2C (Addr 0x52)
      Internal PCI arbiter disabled
      32 kB I-Cache 32 kB D-Cache
Board: Mellanox PPC460EX Board
FDEF:  No
I2C:   ready
DRAM:   2 GB (ECC enabled, 400 MHz, CL3)
FLASH: 16 MB
NAND:  1024 MiB
PCI:   Bus Dev VenId DevId Class Int
PCIE0: link is not up.
PCIE1: successfully set as root-complex
       01  00  15b3  bd34  0c06  00
Net:   ppc_4xx_eth0, ppc_4xx_eth1
Hit Ctrl+B to stop autoboot:  0

Mellanox FabricIT

Boot Menu:
  1. EFM_PPC_M460EX EFM_1.1.1000 2010-06-24 16:32:03 ppc
  2. EFM_PPC_M460EX EFM_1.1.1200  2010-06-25  18 :00:03 ppc
  3. U-Boot prompt
  Choice:
```

5. Select the image to boot.

Appendix A: Specification

Table 10 - IS5025 Specification Data

Physical		Power and Environmental	
Size: IS5025-B (short) IS5025-S (Standard i.e. long) Weight: Short: Standard: Mounting: Air Flow: SerDes Speeds: Connector Types:	 1.716” (1U) H x 17.17” W x16.84” D 43.6mm X 436.2mm X 427.7mm 1.716” (1U) H x 17.17” W x24.71” D 43.6mm X 436.2mm X 627.7 mm 15.091 lbs. 1 PSU 6.845 kg 16.981 lbs. 2 PSUs 7.702 kg 19.5 lbs. 1 PSU 8.845kg. 21.39 lbs. 2 PSUs 9.702kg 19” Rack mount 94.0 CFM 10, 20, or 40,Gb/s per port QSFP	Input Voltage: Power Consumption one power supply 36 port QDR no management CPU Passive Cables Active Cables QSFP Max Power per port for active cables: Temperature: Humidity: Shock and Vibration:	100 - 240 VAC 50-60Hz Typ ical / Max 127.94 / 136.35W 200.23 / 232.74W For second power supply add 7.6 W 2.0W 10° to 45° Celsius 10% - 90% non-condensing ETSI EN 300 019-2-2: 1999-09
Protocol Support		**Regulatory Compliance**	

InfiniBand: QoS: Management: Data Rate:	Auto-Negotiation of (40Gb/s, 20Gb/s, 10Gb/s) 8 InfiniBand Virtual Lanes for all ports Baseboard, Performance, and Device management Agents for full Infini-Band In-Band Management QDR	Safety: EMC (Emissions): Environmental: Acoustic: Sound power level:	US/Canada: cTUVus EU: IEC60950 International: CB USA: FCC, Class A Canada: ICES, Class A EU: EN55022, Class A EU: EN55024, Class A EU: EN61000-3-2, Class A EU: EN61000-3-3, Class A Japan: VCCI, Class A EU: IEC 60068-2-64: Random Vibration EU: IEC 60068-2-29: Shocks, Type I / II EU: IEC 60068-2-32: Fall Test ISO 7779 ETS 300 753 76 dB(A)
Scalability and Performance		**Reliability, Availability and Serviceability Features**	
Switching Performance: Switching Capacity:	Simultaneous wire-speed any port to any port 1.44Tb/s for 36 ports QDR 720 Gb/s for 36 ports DDR 720 Gb/s for 18 ports QDR 360 Gb/s for 18 ports DDR	Hot-Swappable: 1+1 Redundant:	Fan Module and Power Supplies

Table 11 - IS5030 Specification Data

Physical		Power and Environmental	
Size: IS5030-B (short) IS5030-S (Standard i.e. long) Weight: Short: Standard: Mounting: Air Flow: SerDes Speeds: Connector Types:	1.716” (1U) H x 17.17” W x16.84” D 43.6mm X 436.2mm X 427.7mm 1.716” (1U) H x 17.17” W x24.71” D 43.6mm X 436.2mm X 627.7 mm 15.3 lbs. 6.94kg 1 PSU 17.2 lbs. 7.80kg 2 PSUs 19.71lbs. 8.94kg 1 PSU 21.6lbs. 9.797kg 2 PSUs 19” Rack mount 94.0 CFM 10, 20, or 40,Gb/s per port QSFP	Input Voltage: Power Consumption: 405EXR management Passive cables: Active cables: QSFP Max Power per port for active cables: Temperature: Humidity: Shock and Vibration:	100 - 240 VAC 50-60Hz Typical / Max in W 118.30 / 147.46 190.59 / 243.86 For second power supply add 7.6 W 2.0W 10° to 45° Celsius 10% - 90% non-condensing ETSI EN 300 019-2-2: 1999-09
Protocol Support		**Regulatory Compliance**	
InfiniBand: QoS: Management: Data Rate:	Auto-Negotiation of (40Gb/s, 20Gb/s, 10Gb/s) 8 InfiniBand Virtual Lanes for all ports Baseboard, Performance, and Device management Agents for full InfiniBand In-Band Management QDR	Safety: EMC (Emissions): Environmental: Acoustic: Sound power level:	US/Canada: cTUVus EU: IEC60950 International: CB USA: FCC, Class A Canada: ICES, Class A EU: EN55022, Class A EU: EN55024, Class A EU: EN61000-3-2, Class A EU: EN61000-3-3, Class A Japan: VCCI, Class A EU: IEC 60068-2-64: Random Vibration EU: IEC 60068-2-29: Shocks, Type I / II EU: IEC 60068-2-32: Fall Test ISO 7779 ETS 300 753 76 dB(A)

Scalability and Performance		Reliability, Availability and Serviceability Features	
Switching Performance:	Simultaneous wire-speed any port to any port	Hot-Swappable:	Fan Module and Power Supplies
Switching Capacity:	1.44Tb/s for 36 ports QDR 720 Gb/s for 36 ports DDR 720 Gb/s for 18 ports QDR 360 Gb/s for 18 ports DDR	1+1 Redundant:	

Table 12 - IS5035 Specification Data

Physical		Power and Environmental	
Size: IS5035-B (short) IS5035-S (Standard i.e. long) Weight: Short: Standard: Mounting: Air Flow: SerDes Speeds: Connector Types:	 1.716” (1U) H x 17.17” W x16.84” D 43.6mm X 436.2mm X 427.7mm 1.716” (1U) H x 17.17” W x24.71” D 43.6mm X 436.2mm X 627.7 mm 15.3 lbs. 6.94kg 1 PSU 17.2 lbs. 7.80kg 2 PSUs 19.71lbs. 8.94kg 1 PSU 21.6lbs. 9.797kg 2 PSUs 19” Rack mount 94.0 CFM 10, 20, or 40,Gb/s per port QSFP	Input Voltage: Power Consumption running 36 ports Passive Cables Active Cables QSFP Max Power per port for active cables: Temperature: Humidity: Shock and Vibration:	100 - 240 VAC 50-60Hz Typical / Max in W 122.85 / 153.02 196.14 / 249.41 For second power supply add 7.6 W 2.0W 10° to 45° Celsius 10% - 90% non-condensing ETSI EN 300 019-2-2: 1999-09
Protocol Support		**Regulatory Compliance**	
InfiniBand: QoS: Management: Data Rate:	Auto-Negotiation of (40Gb/s, 20Gb/s, 10Gb/s) 8 InfiniBand Virtual Lanes for all ports Baseboard, Performance, and Device management Agents for full InfiniBand In-Band Management QDR	Safety: EMC (Emissions): Environmental: Acoustic: Sound power level:	US/Canada: cTUVus EU: IEC60950 International: CB USA: FCC, Class A Canada: ICES, Class A EU: EN55022, Class A EU: EN55024, Class A EU: EN61000-3-2, Class A EU: EN61000-3-3, Class A Japan: VCCI, Class A EU: IEC 60068-2-64: Random Vibration EU: IEC 60068-2-29: Shocks, Type I / II EU: IEC 60068-2-32: Fall Test ISO 7779 ETS 300 753 76 dB(A)

Scalability and Performance		Reliability, Availability and Serviceability Features	
Switching Performance: Switching Capacity:	Simultaneous wire-speed any port to any port 1.44Tb/s for 36 ports QDR 720 Gb/s for 36 ports DDR	Hot-Swappable: 1+1 Redundant:	Fan Module and Power Supplies

A.1 EMC Certifications

The list of approved certifications per switch in different regions of the world is located on the Mellanox Website at:

www.mellanox.com/related-docs/user_manuals/Regulatory_and_Compliance_Guide.pdf

A.2 EMC Statements

A.2.1 FCC Statements (USA)

Class A Statements:

§ 15.19(a)(4)

This device complies with Part 15 of the FCC Rules.

Operation is subject to the following two conditions:

1. This device may not cause harmful interference, and
2. This device must accept any interference received, including interference that may cause undesired operation.

§ 15.21

Statement

Warning! Changes or modifications to this equipment not expressly approved by the party responsible for compliance (Mellanox Technologies) could void the user's authority to operate the equipment.

§15.105(a)

Statement

NOTE: This equipment has been tested and found to comply with the limits for a Class A digital device, pursuant to Part 15 of the FCC Rules. These limits are designed to provide reasonable protection against harmful interference when the equipment is operated in a commercial environment. This equipment generates, uses, and can radiate radio frequency energy and, if not installed and used in accordance with the instruction manual, may cause harmful interference to radio communications. Operation of this equipment in a residential area is likely to

cause harmful interference in which case the user will be required to correct the interference at his own expense.

A.2.2 EN Statements (Europe)

EN55022 Class A Statement:

Warning

This is a class A product. In a domestic environment this product may cause radio interference in which case the user may be

A.2.3 ICES Statements (Canada)

Class A Statement:

"This Class A digital apparatus complies with Canadian ICES-003.
Cet appareil numérique de la classe A est conforme à la norme NMB-003 du Canada."

A.3 China CCC Warning Statement

China-CCC Warning statements

在维修的时候一定要断开所有电源 (English translation"disconnect all power sources before service")

For non tropical use:

安全说明和标记	汉文	"仅适用于非热带气候条件下安全使用。"
	藏文	《[illegible]》
	蒙古文	"[illegible]"
	壮文	Dan hab yungh youq gij dienheiq diuzgen mbouj dwg diegndat haenx ancienz sawjyungh.
	维文	غەيرى ئىسسىق بەلباغ ھاۋا كىلىماتى شارائىتىدىلا بىخەتەر ئىشلەتكىلى بولىدۇ

For altitude 2000 meter and below:

安全说明和标记	汉文	仅适用于海拔2000m以下地区安全使用。
	藏文	《2000m [illegible]》
	蒙古文	"[illegible]2000[illegible]"
	壮文	Dan hab yungh youq gij digih haijbaz 2000m doxroengz haenx ancienz sawjyungh.
	维文	دېڭىز يۈزىدىن 2000 مېتىر تۆۋەن رايونلاردىلا بىخەتەر ئىشلەتكىلى بولىدۇ

Warning for Class A:

声 明

此为 A 级产品，在生活环境中，该产品可能会造成无线电干扰。在这种情况下，可能需要用户对其干扰采取切实可行的措施。

English translation of above statement

This is a Class A product. In a domestic environment this product may cause radio interference, in which case the user may be required to take adequate measures.

A.4 VCCI Statements (Japan)

Class A Statement:

この装置は、情報処理装置等電波障害自主規制協議会（ＶＣＣＩ）の基準に基づくクラスＡ情報技術装置です。この装置を家庭環境で使用すると電波妨害を引き起こすことがあります。この場合には使用者が適切な対策を講ずるよう要求されることがあります。

A.4.1 (Translation - "This is a Class A product based on the standard of the Voluntary Control Council for Interference by Information Technology Equipment (VCCI). If this equipment is used in a domestic environment, radio interference may occur, in which case the user may be required to take corrective actions.")

A.5 MIC Certification (Korea)

Korea's "Regulation for Certification of Information and Communication Equipment," requires EMC testing and certification for many electronic products. Korean EMC certifications are issued by Radio Research Laboratory (RRL), which is organized under the Ministry of Information and Communications (MIC). EMC testing includes electromagnetic emissions (EMI) and susceptibility (EMS). Certified equipment is labeled with the MIC mark and certification number.

이 기기는 업무용으로 전자파적합등록을 한 기기이오니 판매자 또는 사용자는 이 점을 주의하시기 바라며 만약 잘못 판매 또는 구입하였을 때에는 가정용으로 교환하시기 바랍니다.

Translation:

Class A Device This device is registered for EMC requirements for industrial use. The seller or buyer should be aware of this. If this type was sold or purchased by mistake, it should be replaced with a residential-use type.

Appendix B: Passing the Power Cord From the Connector Side to the Power Side

This appendix will demonstrate the installation procedure to follow should you need to bring the power cords from the connector side of the switch to the power side of the switch in a full rack.

Tools and Customer Supplied Parts

- Phillips Screwdrivers #1 and #2
- ESD Strap
- ESD mat
- Grounding screw
- Grounding wire sufficient to reach a valid ground.

Parts included in the installation kit:

- 2 rails
- 2 rail slides
- 8 pan head screws M6
- 8 recessed flat head screws
- 4 caged nuts
- 2 metal washers

Figure 34: Rack Installation Kit Parts

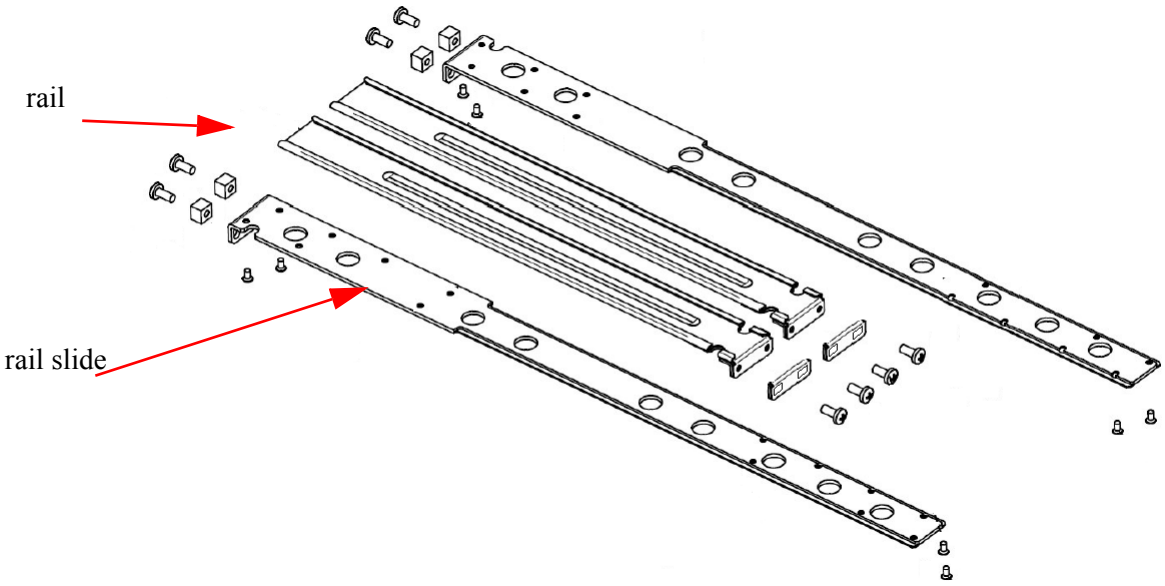

Figure 35: Rack Rail Kit Parts MIS00083/85

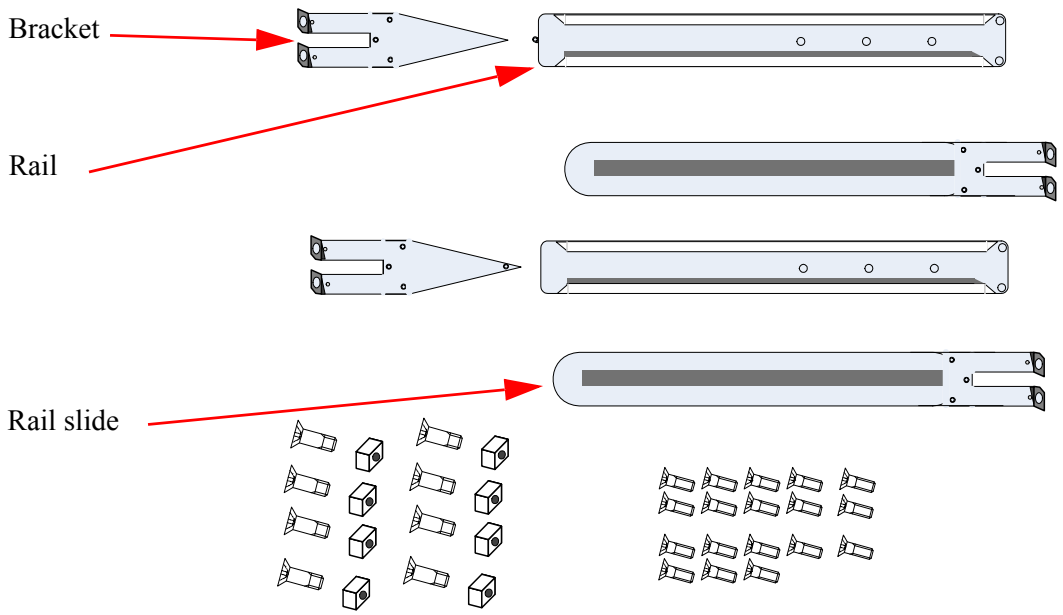

Before you install your new MTS3600 switch, unpack the system and check to make sure that all the parts have been sent, check this against the parts list. Check the parts for visible damages that may have occurred during shipping.

Note: If anything is damaged or missing, contact your customer representative immediately.

Procedure

1. Place the ESD mat on the floor where you will be working and put on the ESD strap. Make sure the ESD strap is touching your skin and that the other end is connected to a verified ground.
2. Choose which side of the switch you want even with the vertical rack support. Either the side with the power supply units or the side with the IB connectors can be even with the vertical rack support. The other side of the switch will be further inside of the rack.

Things to consider before choosing where to mount the rails and rail slides.

Figure 36: Which Side of the Rack Do You Want the Connectors?

The distance between the rack and the door can be as little as 4 cm on one side of the rack and as much as 18 cm on the other side of the rack. Keep in mind that there can be as many as 36 cables connected to the switch.

- Do you want the connector side recessed in the rack to allow for larger cable bending radius?
- Will the connector side be recessed past other equipment in the rack and will this be problematic?

3. Install the rail slides onto the switch. Place the end of the rail slide with the 90° angle on the side of the switch that you want to be even with the vertical support of the 19” rack. Use four of the flat head screws for each rail slide. There are two sets of holes in the rail slide. Select the set of holes to either mount the switch closer or farther away from the rack vertical support. Tighten the screws to 3Nm or 26.5 pound inches.

Figure 37: Screwing the Rail Slide onto the switch

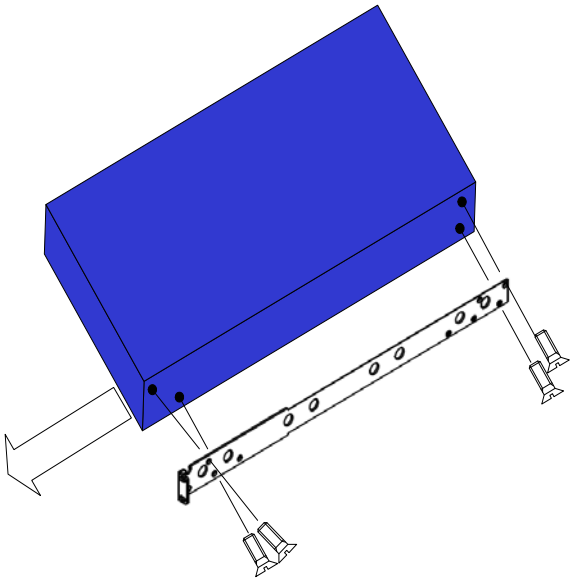

4. Clip the nuts into the holes in the rack you will be using to connect the rail slides. Check that both sides of the switch are in the same position number on the rack.

Figure 38: Caged Nut Spacing

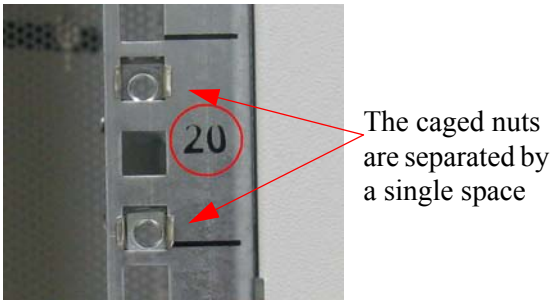

5. Using two of the pan head screws and one washer, for each rail, install the rails to the other end of the rack. Place the rail behind the holes in the rack and screw the screws through the holes in the washer then through the rails. Tighten the pan head screws that hold the rails to 9.2 Nm or 81.5 pound inches.

Figure 39: Screwing in the Rails

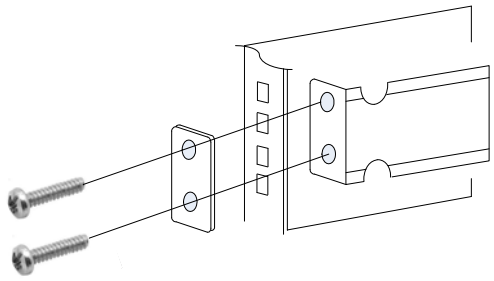

6. Place the four bolts for the caged nuts within reach.
7. Slide the switch into the rails.
8. Put the switch into place and screw the bolts into the nuts from step 4. Tighten the bolts to 9.2 Nm or 81.5 pound inches.
9. Tighten all of the screws.
10. Plug in the power cables.
11. Check the Status LEDs and confirm that all of the LEDs show status lights consistent with normal operation.
12. You can start connecting all of the cables to the switch.

Make sure that the Rail kit is compatible with your rack.

For short depth switches, rail kit # MIS00083 is to be used for racks from 50cm to 80cm deep, and rail kit # MIS00079 is to be used for racks from 38cm to 50cm deep including the iDataPlex rack.

For standard depth switches rail kit # MIS00085 is to be used for racks from 60cm to 80cm deep.

Parts included in the rail kit:

- 2 rails
- 2 rail slides
- 2 brackets
- 18 recessed flat head screws
- 8 caged nuts
- 8 pan head screws M6

Figure 40: Rack Rail Kit Parts MIS000079

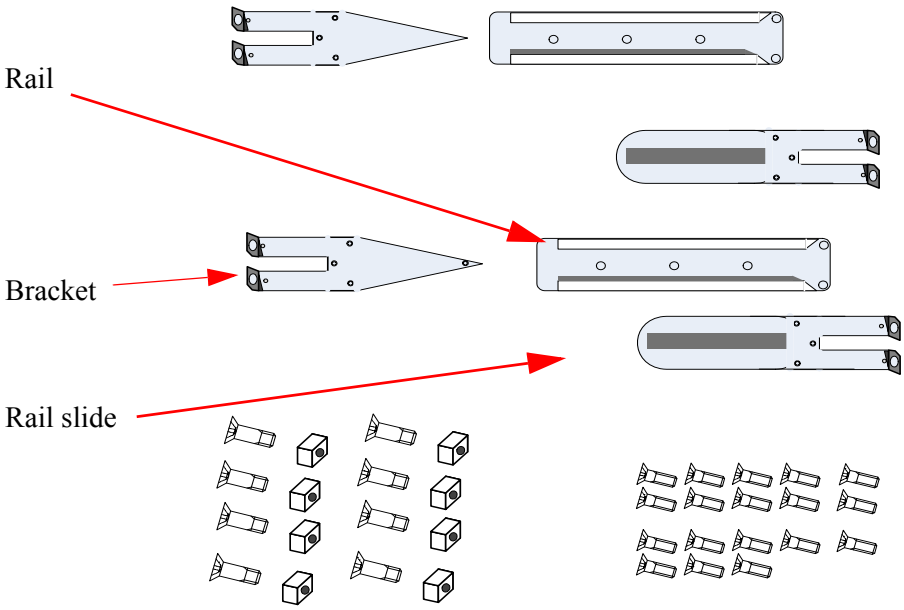

1. Place the ESD mat on the floor where you will be working and put on the ESD strap. Make sure the ESD strap is touching your skin and that the other end is connected to a verified ground.
2. Choose which side of the switch you want close to the rack vertical support. Either the side with the power supply units or the side with the IB connectors can be close to one of the vertical rack supports.

Things to consider before choosing where to mount the rails and rail slides.

Figure 41: Which Side of the Rack Do You Want the Connectors?

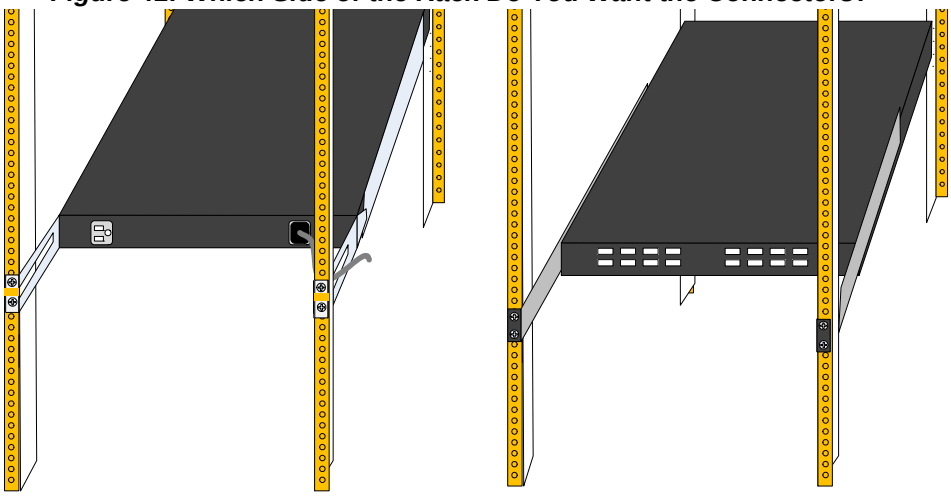

The figure above shows the power side next to the door and the connector side away from the door. This configuration has more room for the cables and a larger bending radius.

The figure below shows the connector side next to the door and the power side away from the door. This configuration may be necessary to conform to your rack configura-

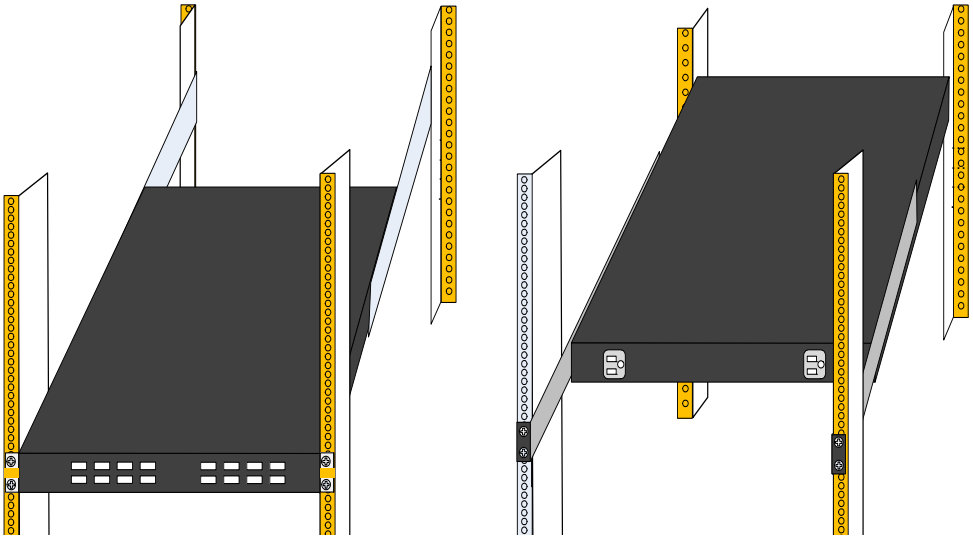

The distance between the rack and the door can be as little as 4 cm on one side of the rack and as much as 18 cm on the other side of the rack. Keep in mind that there can be as many as 36 cables connected to the switch.

- Do you want the connector side recessed in the rack to allow for a larger cable bending radius?
- Will the connector side be recessed past other equipment in the rack and will this be problematic?

Note: The distance between the vertical supports in the rack must be at least 10cm longer than the switch.

1. Determine which side of the rack (front or back) will need the plug end and which side of the rack will need the socket end. If you have only one power supply unit, determine which side of the rack (left or right) will need the power cord.

Note: The primary PSU is on the right side of the power side of the switch.

1. Put the power cables through the 1U space for the switch.

Figure 42: Full Rack

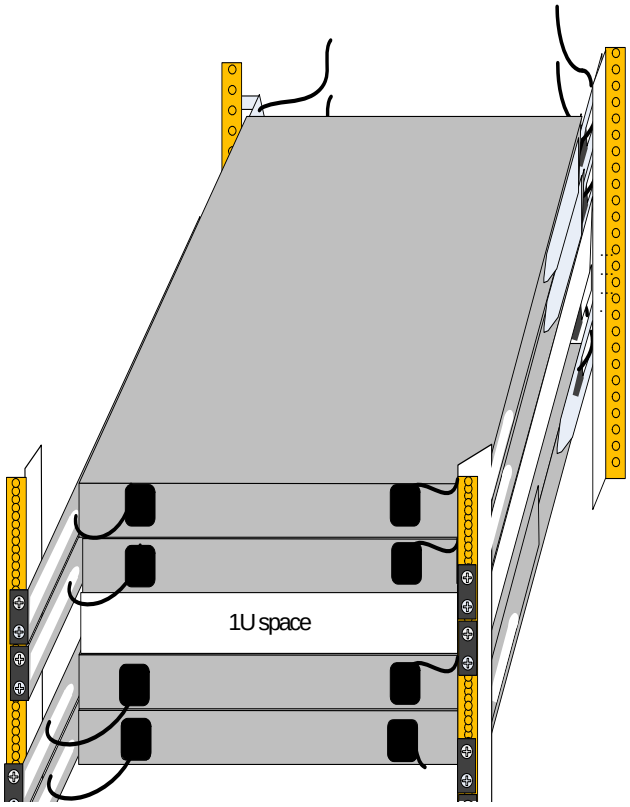

Note: Make sure that they are extending from both sides of the rack.

1. Clip the 4 caged nuts into the holes in the rack you will be using to connect the rail slides. Check that both sides of the switch, left and right, are the same level in the rack.

Figure 43: Inserting the Caged Nuts

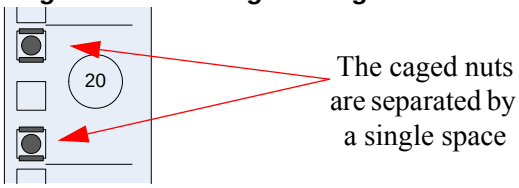

Figure 44: Put the Cables Through the 1U Space

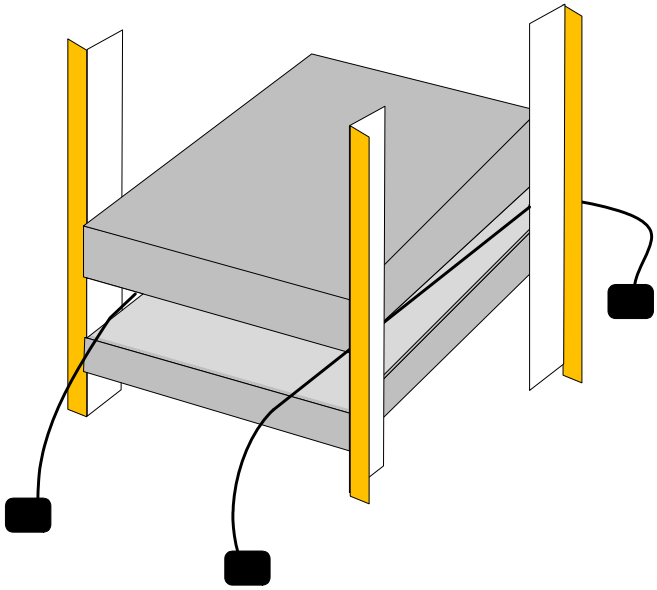

2. Install the rail slides placing the power cords through the slots.

Figure 45: Placing the Power Cords

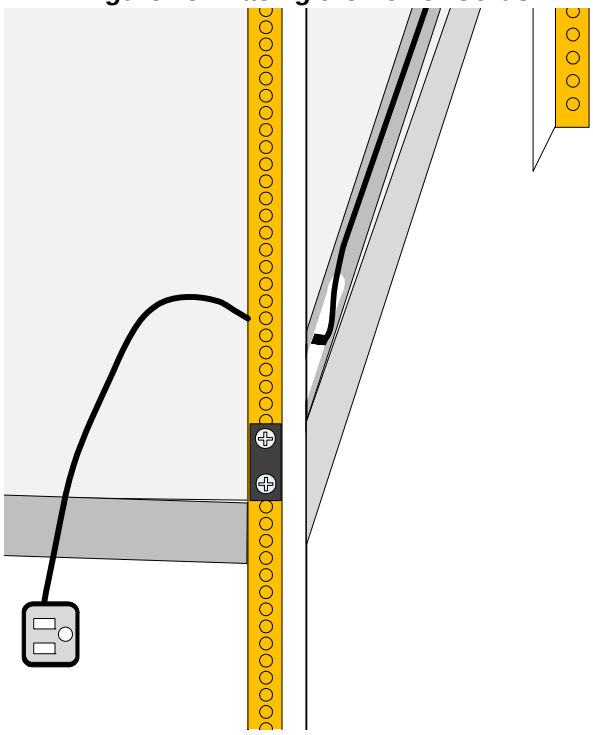

Figure 46: Power Cord Through the Rail Slide

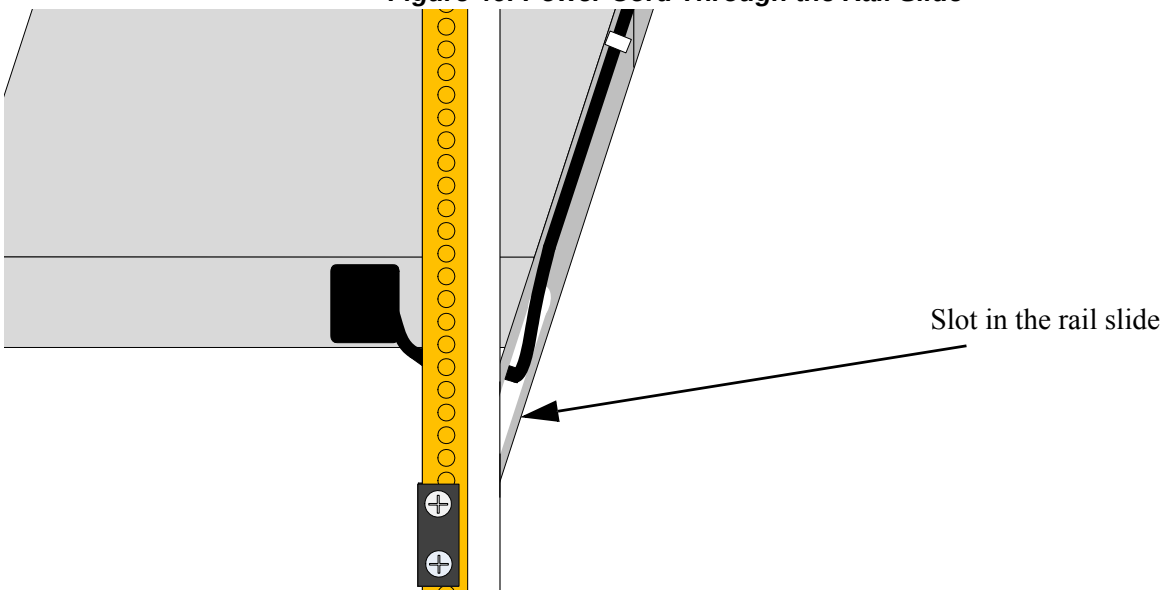

3. Tighten the bolts that hold the rail slides onto the rack to 9.2 Nm or 81.5 pound inches.
4. Make sure the cords come out the other side of the rack.
5. Place both brackets on the switch so that they extend forward of the switch.

Figure 47: Screwing on the Bracket

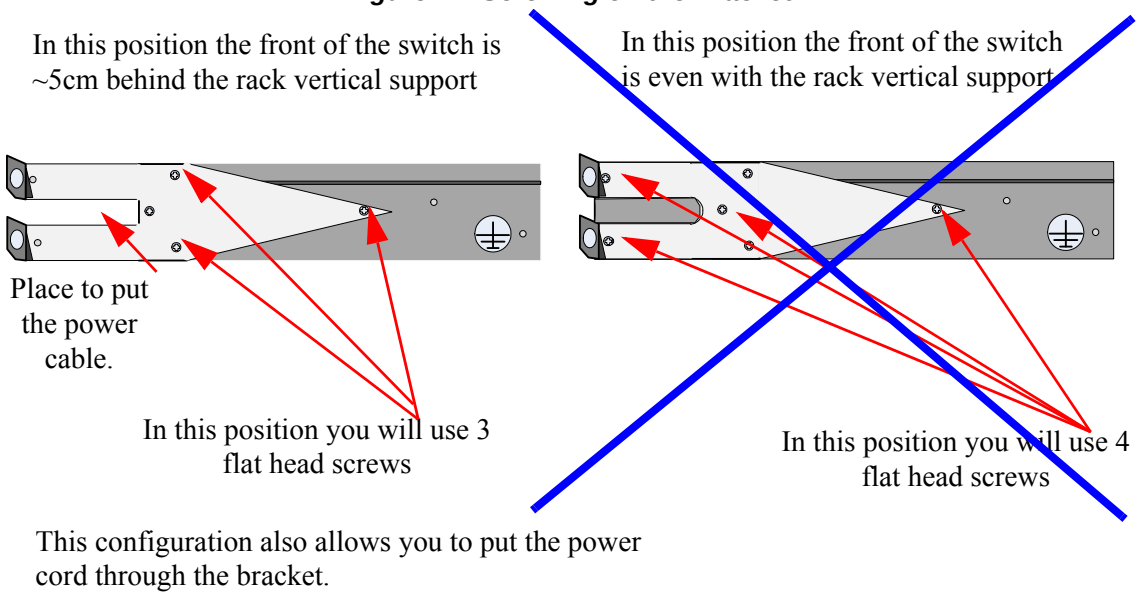

Figure 48: Making Room for the Power Cord

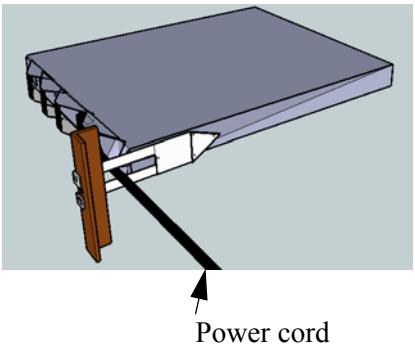

Note: The side of the switch with these brackets will be the side that is very close to the vertical rack support.

1. Screw the rails onto the switch. Use 5 flat head screws to connect each rail to the switch.

Figure 49: Screwing on the Rail

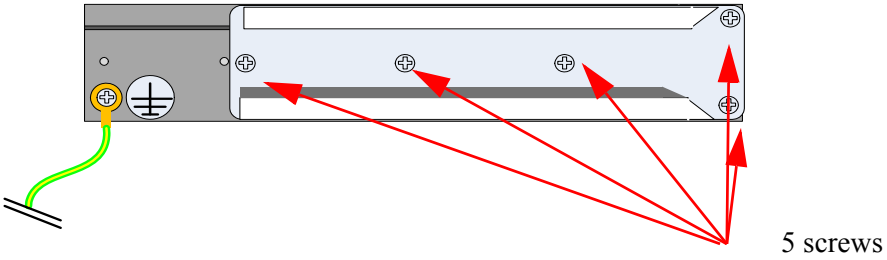

2. Clip 4 more caged nuts into the holes in the rack you will be using to connect the brackets. Check that both sides of the switch, power side and connector side, are at the same level in the rack.
3. Place the four bolts for the caged nuts within reach.
4. Slide the switch into the rack and catch the rail slides into the rails.

Note: Before putting the switch in place guide the power cords through the slots in the brackets.

Figure 50: Power Cord Through the Bracket

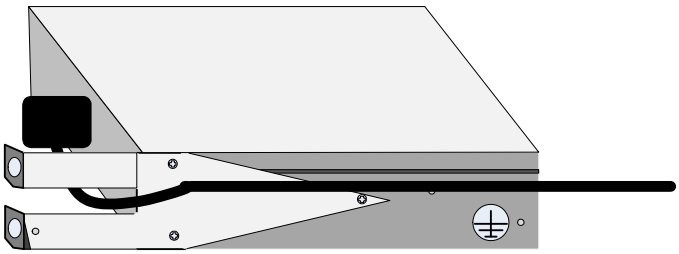

Figure 51: Power Side View

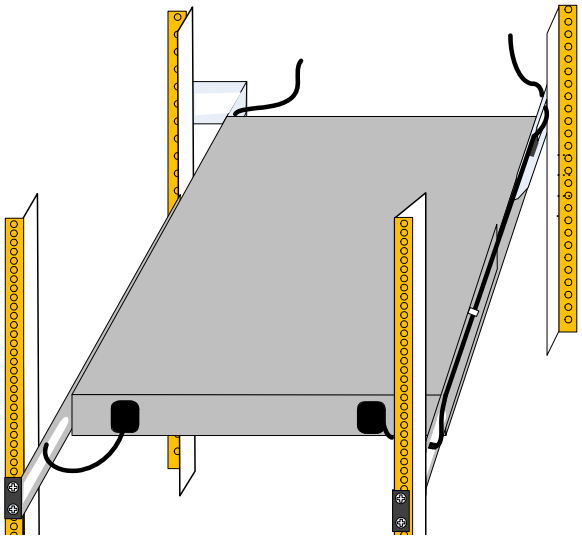

1. Tighten the bolts to 9.2 Nm or 81.5 pound inches.

Figure 52: Connect Bracket to Rack Vertical support

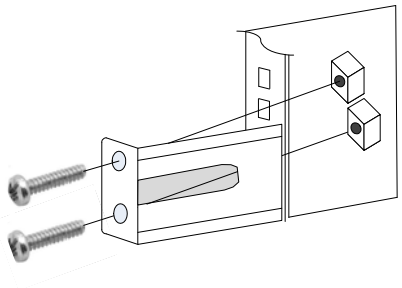

2. Ground the switch
3. Plug in the power cables.
4. Check the Status LEDs and confirm that all of the LEDs show status lights consistent with normal operation.

Warning: Any yellow status LEDs is cause for concern and must be dealt with immediately.

It can take up to 3 minutes to boot up, during which time the status LED may indicate red.

5. You can start connecting all of the cables to the switch.

Appendix C: QSFP Interface

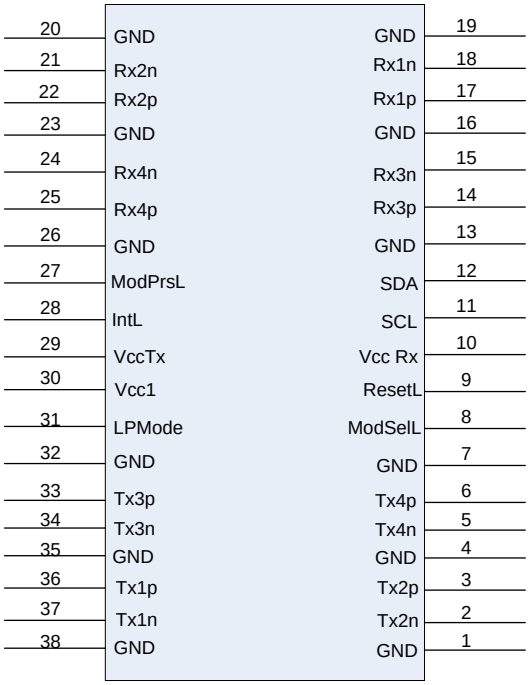

Table 13 - InfiniBand QSFP Connector Pinout

Connector Pin Number	Connector Pin Name	Signal Description
1	GND	Ground
2	Tx2n	Transmitter Inverted Data Input
3	Tx2p	Transmitter Non-Inverted Data Input
4	GND	Ground
5	Tx4n	Transmitter Inverted Data Input
6	Tx4p	Transmitter Non-Inverted Data Input
7	GND	Ground
8	ModSelL	Module Select
9	ResetL	Module Reset
10	Vcc Rx	+3.3 V Power supply receiver
11	SCL	2-wire serial interface clock
12	SDA	2-wire serial interface data
13	GND	Ground
14	Rx3p	Receiver Non-Inverted Data Output
15	Rx3n	Receiver Inverted Data Output
16	GND	Ground
17	Rx1p	Receiver Non-Inverted Data Output
18	Rx1n	Receiver Inverted Data Output
19	GND	Ground
20	GND	Ground
21	Rx2n	Receiver Inverted Data Output 3
22	Rx2p	Receiver Non-Inverted Data Output 3
23	GND	Ground
24	Rx4n	Receiver Inverted Data Output 3
25	Rx4p	Receiver Non-Inverted Data Output 3
26	GND	Ground
27	ModPrsL	Module Present
28	IntL	Interrupt
29	Vcc Tx	+3.3 V Power supply transmitter
30	Vcc 1	+3.3 V Power Supply
31	LPMode	Low Power Mode
32	GND	Ground

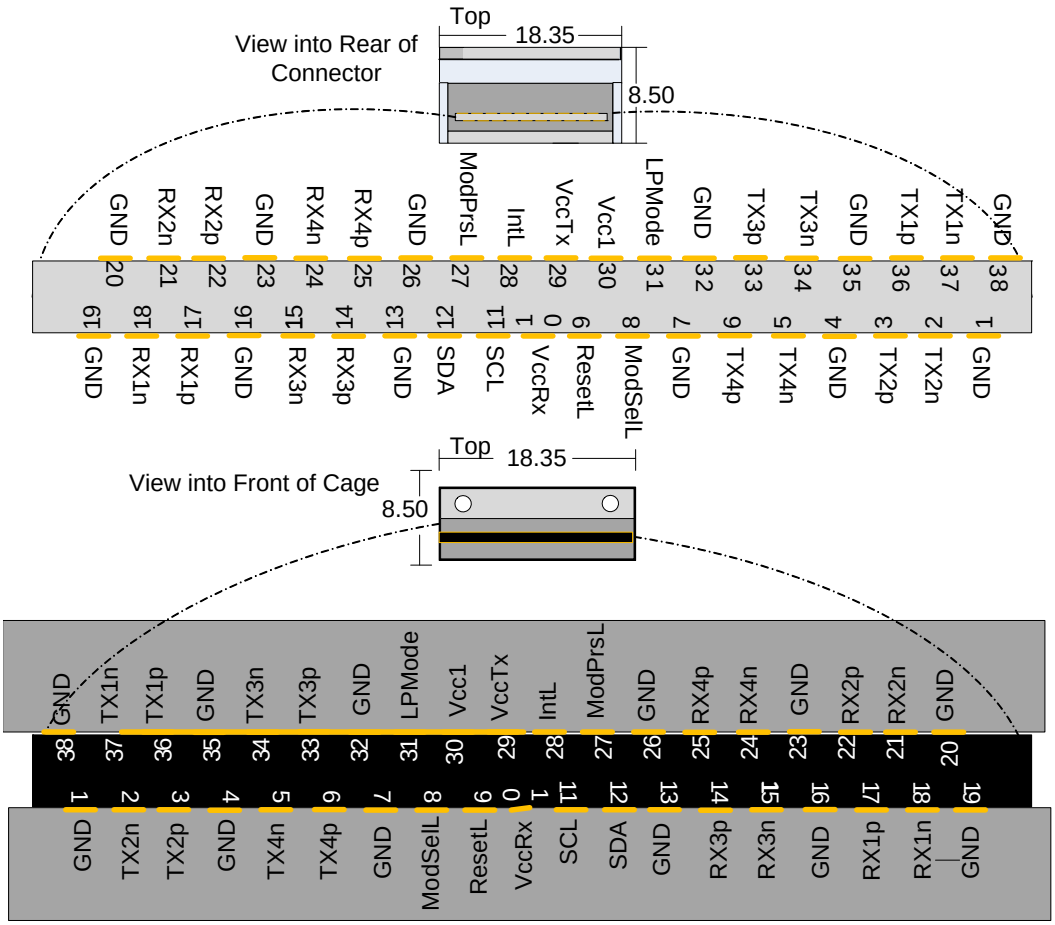
View into Rear of Connector
Top
18.35
8.50
GND 38 1 GND
TX1n 37 2 TX2n
TX1p 36 3 TX2p
GND 35 4 GND
TX3n 34 5 TX4n
TX3p 33 9 TX4p
GND 32 7 GND
LPMode 31 8 ModSelL
Vcc1 30 6 ResetL
VccTx 29 0 VccRx
IntL 28 1 SCL
ModPrsL 27 2 SDA
GND 26 3 GND
RX4p 25 4 RX3p
RX4n 24 5 RX3n
GND 23 9 GND
RX2p 22 7 RX1p
RX2n 21 8 RX1n
GND 20 9 GND
View into Front of Cage
Top
18.35
8.50
GND 38 1 GND
TX1n 37 2 TX2n
TX1p 36 3 TX2p
GND 35 4 GND
TX3n 34 5 TX4n
TX3p 33 9 TX4p
GND 32 7 GND
LPMode 31 8 ModSelL
Vcc1 30 6 ResetL
VccTx 29 0 VccRx
IntL 28 1 SCL
ModPrsL 27 2 SDA
GND 26 3 GND
RX4p 25 4 RX3p
RX4n 24 5 RX3n
GND 23 9 GND
RX2p 22 7 RX1p
RX2n 21 8 RX1n
GND 20 9 GND

Appendix D: RJ45 CONSOLE Interface

The RJ45 CONSOLE interface uses the EIA 568A standard wiring color coding.

CONSOLE

J34

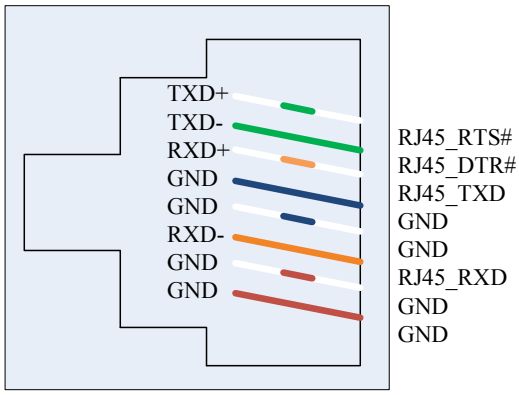

Looking into the Socket

Table 14 - RJ45 CONSOLE Pinout

Connection	Signal	Pin#	Color
TXD+	RJ45_RTS#	1	G/W
TXD-	RJ45_DTR#	2	G
RXD+	RJ45_TXD	3	O/W
GND	GND	4	Bl
GND	GND	5	Bl/W
RXD-	RJ45_RXD	6	O
GND	GND	7	Br/w
GND	GND	8	Br

I^2C

J34

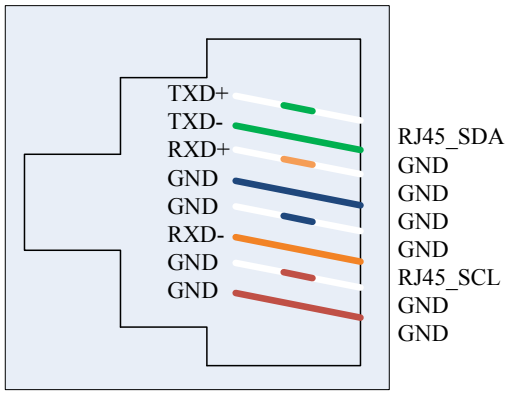

Looking into the Socket

Appendix E: Replacement Parts Ordering Numbers

Table 15 - Replacement Parts Ordering Numbers

Part Description	OPN
IS503X Power Supply Unit PSU Connector side to Power side air-flow. This Replacement part is for both the PSU 1 and PSU 2.	MIS000053
IS503X Power Supply Unit PSU Power side to Connector side air-flow. This Replacement part is for both the PSU 1 and PSU 2.	MIS000054
IS503X Power supply blank	MIS000055
IS503X Rack installation kit (standard depth switch)	MIS000085
IS503X Rack installation kit (standard)	MIS000083
IS503X Rack installation kit (short)	MIS000079
IS503X Fan Unit for Power side to Connector side air flow	MIS000051
IS503X Fan Unit for Connector side to Power side air flow	MIS000082
RS232 Cable RJ45 to DB9 Harness	HAR000028
I2C DB9 or RJ45 to USB Adapter	MTUSB-1
Power cord Type C13-C14	ACC000251
Power cord Type B for USA, Canada, Mexico, Taiwan	ACC000204
Power cord Type H for Israel	ACC000205
Power cord Type E/F for Sweden, France, Germany, Netherlands, Russia	ACC000207
Power cord Type G for UK	ACC000208
Power cord Type D for India	ACC000209
Power cord Type I for China	ACC000210
Power cord Type J for Switzerland	ACC000211
Power cord Type B for Japan,	ACC000212
Power cord Type I for Australia	ACC000213

Appendix F: Avertissements de sécurité d'installation (French)

1. Instructions d'installation

Lisez toutes les instructions d'installation avant de brancher le matériel à la source d'alimentation électrique.

2. Température excessive

Ce matériel ne doit pas fonctionner dans une zone avec une température ambiante dépassant le maximum recommandé de 45°C (113°F). En outre, pour garantir un bon écoulement de l'air, laissez au moins 8 cm (3 pouces) d'espace libre autour des ouvertures de ventilation.

3. Empilage du châssis

Le châssis ne doit pas être empilé sur un autre matériel. Si le châssis tombe, il peut provoquer des blessures corporelles et des dégradations de biens.

4. Connection d'Alimentation electrique excedentaire -dangers électriques

Ce produit comporte un couvercle transparent sur l'espace pour l'alimentation électrique redondante.
Ne pas faire fonctionner le produit si le couvercle transparent n'est pas solidement fixé ou s'il est enlevé.

5. Orages – dangers électriques

Pendant un orage, il ne faut pas utiliser le matériel et il ne faut pas brancher ou débrancher les câbles.

6. Branchement/débranchement des câbles InfiniBand en cuivre

Les câbles InfiniBand en cuivre sont lourds et ne sont pas flexibles, il faut donc faire très attention en les branchant et en les débranchant des connecteurs. Consultez le fabricant des câbles pour connaître les mises en garde et les instructions spéciales.

7. Montage et entretien sur baie

Lorsque ce produit est monté ou entretenu sur baie, il faut prendre des précautions spéciales pour s'assurer que le système reste stable. En général, il faut remplir la baie avec du matériel de bas en haut.

8. Installation du matériel

Ce matériel ne doit être installé, remplacé ou entretenu que par du personnel formé et qualifié.

9. Elimination du matériel

L'élimination de ce matériel doit s'effectuer dans le respect de toutes les législations et réglementations nationales en vigueur.

10. Codes électriques locaux et nationaux

Ce matériel doit être installé dans le respect des codes électriques locaux et nationaux.

Appendix G: Installation - Sicherheitshinweise (German)

1. Installationsanleitungen

Lesen Sie alle Installationsanleitungen, bevor Sie das Gerät an die Stromversorgung anschließen.

2. Übertemperatur

Dieses Gerät sollte nicht in einem Bereich mit einer Umgebungstemperatur über der maximal empfohlenen Temperatur von 45°C (113°F) betrieben werden. Außerdem sollten mindestens 8 cm (3 in.) Freiraum um die Belüftungsöffnungen sein, um einen einwandfreien Luftstrom zu gewährleisten.

3. Stapeln des Chassis

Das Chassis sollte nicht auf andere Geräte gestapelt werden. Wenn das Chassis herunterfällt, kann es zu Verletzungen und Beschädigungen an Geräten führen.

4. Redundanter Stromversorgungsanschluss - Elektrische Gefahr

Dieses Produkt verfügt über eine Abdeckung über dem Bereich für die redundante Stromversorgung. Betreiben Sie das Produkt nicht, wenn diese Abdeckung nicht sicher festsitzt oder entfernt wurde.

5. Bei Gewitter - Elektrische Gefahr

Arbeiten Sie während eines Gewitters und Blitzschlag nicht am Gerät, schließen Sie keine Kabel an oder ab.

6. Anschließen/Trennen von InfiniBand-Kupferkabel

InfiniBand-Kupferkabel sind schwer und nicht flexible. Deshalb müssen sie vorsichtig an die Anschlüsse angebracht bzw. davon getrennt werden. Lesen Sie die speziellen Warnungen und Anleitungen des Kabelherstellers.

7. Rack-Montage und Wartung

Wenn dieses Produkt in einem Rack montiert oder gewartet wird, sind besondere Vorsichtsmaßnahmen zu ergreifen, um die Stabilität des Systems zu gewährleisten. Im Allgemeinen sollten Sie das Gestell von unten nach oben mit Geräten füllen.

8. Geräteinstallation

Diese Gerät sollte nur von geschultem und qualifiziertem Personal installiert, ausgetauscht oder gewartet werden.

9. Geräteentsorgung

Die Entsorgung dieses Geräts sollte unter Beachtung aller nationalen Gesetze Bestimmungen erfolgen.

10. Regionale und nationale elektrische Bestimmungen

Dieses Gerät sollte unter Beachtung der regionalen und nationalen elektrischen Bestimmungen installiert werden.

Appendix H: Advertencias de seguridad para la instalación (Spanish)

1. Instrucciones de instalación

Antes de conectar el equipo a la fuente de alimentación, leer todas las instrucciones de instalación.

2. Instalación en un lugar con acceso restringido.

Esta unidad ha sido ideada para instalar en lugares de acceso restringido.

3. Sobrecalentamiento

No se debe utilizar el equipo en un área con una temperatura ambiente superior a la máxima recomendada: 45°C. Además, para garantizar una circulación de aire adecuada, se debe dejar como mínimo un espacio de 8 cm (3 pulgadas) alrededor de las aberturas de ventilación.

4. Apilamiento del chasis

Los chasis no se deben apilar sobre otros equipos. La caída del chasis podría causar lesiones corporales, así como daños al equipo.

5. Conexión de fuente de alimentación redundante: peligro de descarga eléctrica

Este producto incluye una fuente de alimentación redundante o, en su lugar, una vacía. Si se dispone de una fuente de alimentación vacía, no utilizar el producto si su tapa está quitada o no está bien cerrada.

6. Cuando hay rayos: peligro de descarga eléctrica

No utilizar el equipo ni conectar o desconectar cables durante períodos de actividad de rayos.

7. Montaje y mantenimiento de bastidores

Al instalar o realizar el mantenimiento de este aparato en un bastidor, es preciso adoptar precauciones especiales para garantizar que el sistema se mantenga estable. En general, en un bastidor, los equipos se deben instalar comenzando desde abajo hacia arriba.

8. Instalación de equipos

La instalación, el reemplazo y el mantenimiento de este equipo estarán a cargo únicamente de personal capacitado y competente.

9. Asegurar confinamientos adecuados

El fabricante del producto final o el usuario final deberán suministrar un confinamiento adecuado para componentes eléctricos y mecánicos y contra incendio.

10. Eliminación de equipos

La eliminación definitiva de este equipo se debe efectuar conforme a todas las leyes y reglamentaciones nacionales.

11. Códigos eléctricos locales y nacionales

Este equipo se debe instalar conforme a los códigos eléctricos locales y nacionales.

12. Cable de alimentación homologado por UL y con certificación CSA Fuga > 3,5 mA

En conexiones de América del Norte, seleccionar un cable de alimentación homologado por UL y con certificación CSA de tres conductores, [16 AWG], terminado en un enchufe moldeado con capuchón de 125 voltios nominal, [13 A], con una longitud mínima de 1,5 metros, pero no más de 4,5 metros.

En conexiones europeas, seleccionar un cable de alimentación armonizado internacionalmente y marcado "<HAR>", de tres conductores, hilo de 1,0 mm2 como mínimo, 300 voltios nominal, con cobertura protectora aislante de PVC. El cable debe tener un enchufe moldeado con capuchón de 250 voltios nominal, 10 A.

ADVERTENCIA: Alta corriente de fuga. Es esencial efectuar la conexión a tierra antes de conectar la alimentación.

13. Añadir conexión a tierra

Antes de conectar el dispositivo a la línea de alimentación, los tornillos del terminal de la puesta a tierra de protección del dispositivo se deben conectar a la puesta a tierra de protección de la instalación del edificio.

(Información de conexión a tierra):

La instalación del edificio deberá prover un medio para la conexión con la puesta a tierra de protección y un técnico de servicio deberá conectar permanentemente el equipo a dicho medio de conexión.

Un TÉCNICO DE SERVICIO comprobará si la toma eléctrica de la que se suministrará corriente al equipo provee una conexión con la puesta a tierra de protección del edificio. De no ser así, el TÉCNICO DE SERVICIO se encargará de instalar un CONDUCTOR DE CONEXIÓN A TIERRA DE PROTECCIÓN, del terminal de puesta a tierra de protección separado al conductor de tierra de protección del edificio. El equipo se instalará en un área donde haya conexión equipotencial, como por ejemplo, un centro de telecomunicaciones o una sala de computadoras dedicada.

14. Códigos de instalación

Este dispositivo se debe instalar conforme a la versión más reciente de los códigos eléctricos nacionales del país en cuestión. En América del Norte, el equipo se debe instalar de acuerdo con las disposiciones vigentes del Código Eléctrico Nacional de los EE.UU. y del Código Eléctrico de Canadá.

15. Directiva sobre RAEE

Conforme a la Directiva 2002/96/CE sobre RAEE, todos los residuos de equipos eléctricos y electrónicos (EEE) se deben recolectar por separado y no se deben eliminar junto con residuos domésticos.

Al deshacerse de este producto y de todas sus partes, hágalo de una manera responsable y respetuosa con el medio ambiente.

Appendix I: Special Regulations Regarding Finland, Sweden, Denmark, and Norway

Denmark- This unit is class I and must be connected with an AC cord compliant with all national electrical codes in Denmark. The AC cord shall have an integral ground wire, and can only be plugged into a fully grounded outlet.

Do not connect this unit to any outlet that is not fully grounded!

- **Finland -**

"Laite on liitettävä suojamaadoituskoskettimilla varustettuun pistorasiaan"

- **Norway -**

"Apparatet må tilkoples jordet stikkontakt"

Unit is intended for connection to IT power systems for Norway only.

- **Sweden -**

"Apparaten skall anslutas till jordat uttag."