MEITRACK T1 User Guide

Change History

File Name	MEITRACK T1 User Guide		
Project	T1	Creation Date Update Date	2014-06-10 2018-08-02
Subproject	User Guide	Total Pages	18
Version	V2.8	Confidential	External Documentation

Copyright © 2018 Meitrack Group All rights reserved.

Contents

1 Copyright and Disclaimer ..... - 4 -
2 Product Introduction ..... - 4 -
2.1 Product Features ..... - 4 -
2.1.1 Harsh Acceleration/Braking Alert and Impact Alert ..... - 4 -
2.1.2 Roaming Mode ..... - 4 -
3 Product Functions and Specifications ..... - 5 -
3.1 Product Functions ..... - 5 -
3.1.1 Position Tracking ..... - 5 -
3.1.2 Anti-Theft ..... - 5 -
3.1.3 Monitoring ..... - 5 -
3.1.4 Other Functions ..... - 5 -
3.1.5 Functions of Optional Accessories ..... - 6 -
3.2 Specifications ..... - 6 -
4 T1 and Accessories ..... - 7 -
5 Appearance ..... - 7 -
6 First Use ..... - 8 -
6.1 Installing the SIM Card ..... - 8 -
6.2 Charging the Device ..... - 8 -
6.3 LED Indicator ..... - 8 -
6.4 Configuring Device Parameters by Meitrack Manager ..... - 9 -
6.5 Tracking by Mobile Phone ..... - 9 -
6.6 Common SMS Commands ..... - 11 -
6.6.1 Setting Authorized Phone Numbers – A71 ..... - 11 -
6.6.2 Setting Listen-in Phone Numbers – A72 ..... - 11 -
6.6.3 Setting the Smart Sleep Mode – A73 ..... - 12 -
6.6.4 Selecting a Serial Port and Peripheral – C70 ..... - 12 -
7 Logging In to MS03 Tracking System ..... - 12 -
8 Installing the T1 ..... - 13 -
8.1 Installing GPS and GSM Antennas ..... - 13 -
8.2 Installing an I/O Cable ..... - 13 -
8.2.1 Power Cable/Ground Wire (Pin 1/2) ..... - 14 -
8.2.2 ACC and Door Detection (Pin 5/7) ..... - 15 -
8.2.3 Output Control (Pin 10/11) ..... - 15 -
8.2.4 Sensor Input ..... - 16 -
8.3 Installing the Speaker + microphone (RS232 Port) ..... - 16 -
8.4 Installing the RFID Reader (RS232 Port) ..... - 17 -
8.5 Installing the Camera (RS232 Port) ..... - 17 -
8.6 Mounting the T1 ..... - 18 -

Copyright © 2018 Meitrack Group All rights reserved.

1 Copyright and Disclaimer

Copyright © 2018 MEITRACK. All rights reserved.

and are trademarks that belong to Meitrack Group.

The user manual may be changed without notice.

Without prior written consent of Meitrack Group, this user manual, or any part thereof, may not be reproduced for any purpose whatsoever, or transmitted in any form, either electronically or mechanically, including photocopying and recording.

Meitrack Group shall not be liable for direct, indirect, special, incidental, or consequential damages (including but not limited to economic losses, personal injuries, and loss of assets and property) caused by the use, inability, or illegality to use the product or documentation.

2 Product Introduction

The T1 is a brand new high-end vehicle GPS tracker with market-proven quality and precise positioning. In addition to real-time tracking, it supports various peripherals and can be installed into taxies, freight cars, and buses.

2.1 Product Features

2.1.1 Harsh Acceleration/Braking Alert and Impact Alert

You can detect the harsh acceleration/braking alert by setting the limit value.

Cautions on device installation:

1. The device should be installed into the vehicle according to the following direction.
2. The device installation angle cannot exceed 15 degrees.

The default harsh acceleration and braking alert values are 150 mG and -180 mG respectively.

Note:

A. The alert results vary according to the device installation, vehicle model, vehicle weight, and driving behaviors. After the device has been installed properly, you can use the Meitrack Manager software to adjust the harsh acceleration and braking alert values by every 10 mG. You can also use the D79 command to set the values.

B. Impact alert implementation principle is the same as the harsh acceleration and harsh braking, and the parameter value is larger. So this alarm event will only occur when the car is driving fast and there is a collision at the same time If the car is stopped and hit by other vehicles, it will not occur.

2.1.2 Roaming Mode

On the Meitrack Manager page, device parameters in roaming mode differ from that in non-roaming mode. When the device detects that it is in roaming mode, it will be operated according to roaming parameters. This helps to save network traffic and learn about device working status.

3 Product Functions and Specifications

3.1 Product Functions

3.1.1 Position Tracking

- GPS + LBS positioning
- Real-time location query
- Track by time interval
- Track by distance
- Cornering report
- Track by mobile phone

3.1.2 Anti-Theft

- SOS alert
- GPS antenna cut-off alert
- External power supply cut-off alert
- GPS blind spot alert
- Remote vehicle fuel/power cut-off
- Engine or vehicle door status alert
- Towing alert
- Polygonal geo-fence alert
- Fuel stolen alert

3.1.3 Monitoring

- Harsh braking and Harsh acceleration
- Idle Recovery
- Fatigue Driving
- Speeding alert
- Authorized driver profile (Mobileye)
- Fuel monitoring
- Temperature monitoring
- Sharp turn
- Collision alert

3.1.4 Other Functions

- SMS/GPRS (TCP/UDP) communication (Meitrack protocol)
- Built-in 8 MB buffer for recording driving routes (storing 8,192 GPRS cache records, 256 SMS cache records, and 131,072 GPS logs)
- Mileage report
- Low power alert for internal battery
- Build-in vibration sensor and 3-axis accelerometer

Copyright © 2018 Meitrack Group All rights reserved.

- Over-the-Air (OTA) update
- SIM card balance query
- Stop Moving and Start Moving alerts
- Online Parameter Editor

3.1.5 Functions of Optional Accessories

Accessory		Function
A53 resistive fuel level sensor		Check the fuel level.
Super magnet		Fix the device in place.
1 1-Wire interface	iButton	Identify the driver ID and grant permission to start the vehicle.
	A52 digital temperature sensor + A61 sensor box	Monitor temperature.
1 RS232 port	Speaker + microphone	Used for two-way calling and remote monitoring.
	Camera (Used with a TF card)	Take photos.
	RFID reader	Identify the driver ID and grant permission to start the vehicle. Monitor driver attendance by RFID report.
	LED display	Display advertisements and announcements.
	Tire pressure sensor	Monitor tire pressure and temperature in real time
	Ultrasonic fuel level sensor	Measure vehicle's fuel level.

3.2 Specifications

Item	Specifications
Dimension	105 mm x 65 mm x 26 mm
Weight	190g
Power supply	DC 11–36 V/1.5 A
Backup battery	400 mAh/3.7 V
Power consumption	Standby (sleep) power consumption: 5mA， Working power consumption: 65mA
Operating temperature	-20°C to 55°C
Operating humidity	5% to 95%
Working hour	61 hours in power-saving mode 5.7 hours in normal mode
LED indicator	Green indicator showing the GSM signal Blue indicator showing the GPS signal
Button/Switch	1 SOS button (for sending SMSs or dialing) 1 power button
Memory	8 MB buffer
Sensor	3-axis accelerometer (used to wake the device up by vibration and detect towing alerts)

Copyright © 2018 Meitrack Group All rights reserved.

Frequency band	GSM 850/900/1800/1900 MHz
GPS sensitivity	-161 dB
Positioning accuracy	2.5m
I/O port	3 digital inputs (2 negative inputs and 1 positive input) 2 analog detection inputs 2 outputs 1 RS232 port 1 USB port 1 1-Wire interface (used to connect a digital temperature sensor or iButton)

4 T1 and Accessories

T1 and standard accessories:

T1 with a built-in battery	External GSM antenna
I/O cable + SOS button	External GPS antenna
USB cable	CD download card

Optional accessories:

Camera	Speaker + microphone
RFID reader	A53 fuel level sensor
LED display	Ultrasonic fuel level sensor
A52 digital temperature sensor + A61 sensor box	Tire pressure sensor
iButton	

5 Appearance

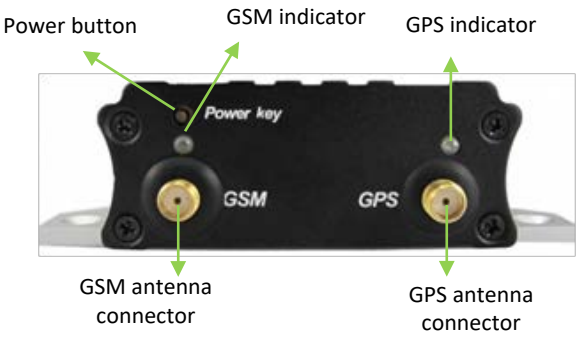

Copyright © 2018 Meitrack Group All rights reserved.

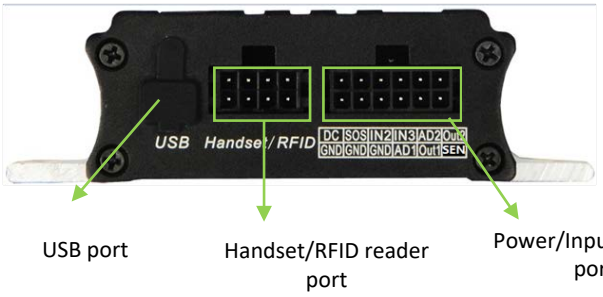

6 First Use

6.1 Installing the SIM Card

1. Loosen the screws, and remove the front cover of the device.
2. Insert the SIM card into the card slot with its gold-plated contacts facing towards the Printed Circuit Board (PCB).
3. Close the cover, and tighten the screws.

Note:

- Power off the device before installing the SIM card.
- Ensure that the SIM card has sufficient balance.
- Ensure that the phone card PIN lock has been closed properly.
- Ensure that the SIM card in the device has subscribed the caller ID service if you want to use your authorized phone number to call the device.

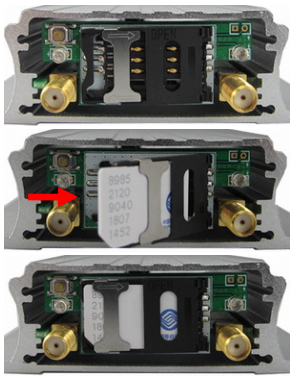

6.2 Charging the Device

When you use the device for the first time, connect the device's GND (-Black) and Power (+Red) wires to 12–24 V external power supply for charging. Ensure that the device is charged at least three hours. Eight hours are recommended.

The device can be installed on a vehicle only after it is configured and tested.

6.3 LED Indicator

Press and hold down the power button for 3–5 seconds to start the device.

GPS Indicator (Blue)	
Steady on	A button or an input is triggered.

Copyright © 2018 Meitrack Group All rights reserved.

Blink (every 0.1 seconds)	The device is being initialized or the battery power is low.
Blink (0.1 seconds on and 2.9 seconds off)	A GPS signal is received.
Blink (1 second on and 2 seconds off)	No GPS signal is received.
GSM Indicator (Green)	
Steady on	A call is coming in or a call is being made.
Blink (every 0.1 seconds)	The device is being initialized.
Blink (0.1 seconds on and 2.9 seconds off)	A base station signal is received.
Blink (1 second on and 2 seconds off)	No base station signal is received.

6.4 Configuring Device Parameters by Meitrack Manager

This section describes how to use Meitrack Manager to configure the device on a computer.

Procedure:

1. Install the USB driver and Meitrack Manager.
2. Connect the device to a computer by using the USB cable.

3. Run Meitrack Manager, then the following dialog box will appear.

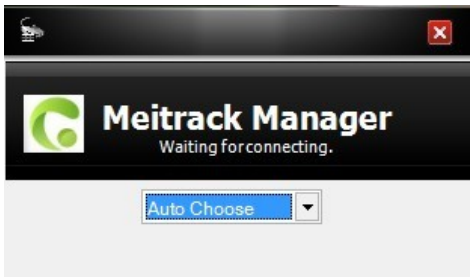

4. Turn on the device, then Meitrack Manager will detect the device model automatically and the parameter page will appear accordingly.

For details about Meitrack Manager, see the *MEITRACK Manager User Guide*.

6.5 Tracking by Mobile Phone

Call or send the **0000,A00** command by SMS to the device's SIM card number. The device will reply to an SMS with a map link.

Click the SMS link. The device's location will be displayed on Google Maps on your mobile phone.

Note: Ensure that the device's SIM card number has subscribed the caller ID service. Otherwise, the tracking function by mobile phone will be unavailable.

Copyright © 2018 Meitrack Group All rights reserved.

SMS example:

Now,061314 10:36,V,26,0Km/h,96%,http://maps.meigps.com/?lat=22.513781&lng=114.057183

The following table describes the SMS format:

Parameter	Description	Remarks
Now	Indicates the current location.	SMS header: indicates the current location or the alert type.
061314 10:36	Indicates the date and time in **MMDDYY hh:mm** format.	None
V	The GPS is invalid.	A = Valid V = Invalid
26	Indicates the GSM signal strength.	Value: 1–32 The larger the value is, the stronger the signal is. If the value is greater than 12, GPRS reaches the normal level.
0Km/h	Indicates the speed.	Unit: km/h
96%	Indicates the remaining battery power.	None
http://maps.meigps.com/?lat=22.513781&lng=114.057183	Indicates the map link. Latitude: 22.513781 Longitude: 114.057183	None

Copyright © 2018 Meitrack Group All rights reserved.

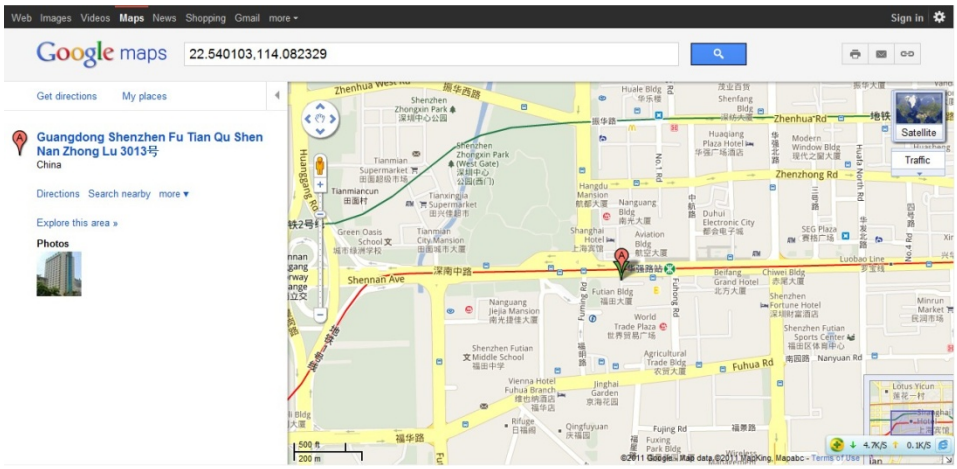

6.6 Common SMS Commands

6.6.1 Setting Authorized Phone Numbers – A71

SMS sending: 0000,A71,*Phone number 1*,*Phone number 2*,*Phone number 3*

SMS reply: IMEI,A71,OK

Description:

Phone number: A phone number contains a maximum of 16 bytes. If no phone numbers are set, leave them blank. Phone numbers are empty by default.

Phone number 1/2/3: SOS phone numbers. When you call the tracker by using these phone numbers, you will receive SMS notification about the location, geo-fence alert and low power alert.

If you need to delete all authorized phone numbers, send **0000,A71**.

When the SOS button is pressed, the tracker will dial phone numbers 1, 2, and 3 in sequence. The tracker will stop dialing when a phone number responds.

Example:

Sending: 0000,A71,13811111111,13822222222,13833333333

Reply: 353358017784062,A71,OK

6.6.2 Setting Listen-in Phone Numbers – A72

SMS sending: 0000,A72,*Listen-in phone number 1*,*Listen-in phone number 2*

SMS reply: IMEI,A72,OK

Description:

When you call the tracker by using the authorized listen-in phone number, the tracker will answer the call automatically and enter the listen-in state. In this way, the tracker will not make any sound.

A maximum of two phone numbers can be set. Each phone number has a maximum of 16 digits. If no phone numbers are set, leave them blank. Phone numbers are empty by default.

If no phone numbers are set and commas are remained, phone numbers set before will be deleted.

If you need to delete all listen-in phone numbers, send **0000,A72**.

Example:

Sending: 0000,A72,13844444444,13855555555

Reply: 353358017784062,A72,OK

Copyright © 2018 Meitrack Group All rights reserved.

6.6.3 Setting the Smart Sleep Mode – A73

SMS sending: 0000,A73,*Sleep level*

SMS reply: IMEI,A73,OK

Description:

When the sleep level is **0**, the sleep mode is disabled.

When the sleep level is **1**, the tracker enters the normal sleep mode. The GSM module always works, and the GPS module occasionally enters the sleep mode. The tracker works 25% longer in the normal sleep mode than that in the normal working mode. This mode is not recommended for short interval tracking; this will affect the route precision.

When the sleep level is **2**, the tracker enters deep sleep mode. If no event (SOS, button triggered, incoming calls, SMSs, or vibration) is triggered after five minutes, the GPS module will stop, and the GSM module will enter sleep mode. Once an event is triggered, the GPS and GSM modules will be woken up.

Note: In any condition, you can use an SMS command to disable the sleep mode, and then the tracker exits the sleep mode and returns back to the normal working mode.

Example:

Sending: 0000,A73,2

Reply: 353358017784062,A73,OK

6.6.4 Selecting a Serial Port and Peripheral – C70

SMS sending: 0000,C70,*Serial port selection*,*Peripheral selection*

SMS reply: IMEI,C70,OK

Description:

Serial port selection = 1: The peripheral port of the device is a debug port.

Serial port selection = 2: The peripheral port of the device is a UART port (default)

Peripheral selection = 0: The device peripheral connects to the camera (default).

Peripheral selection = 1: The device peripheral connects to the Speaker + microphone.

Peripheral selection = 2: The device peripheral connects to the LED display.

Peripheral selection = 3: The device peripheral connects to the A21 LCD display.

Peripheral selection = 4: The device peripheral connects to the RFID reader.

Example:

Sending: 0000,C70,2,4

Reply: 353358017784062,C70,OK

For details about SMS commands, see the *MEITRACK SMS Protocol*.

Note:

1. The default SMS command password is **0000**. You can change the password by using Meitrack Manager and SMS command.
2. The device can be configured by SMS command with a correct password. After an authorized phone number is set, only the authorized phone number can receive the preset SMS event report.

7 Logging In to MS03 Tracking System

Visit http://ms03.trackingmate.com, enter the user name and password, and log in to the MS03. (Purchase the login account from your provider.)

Copyright © 2018 Meitrack Group All rights reserved.

For more information about how to add a tracker, see the *MEITRACK GPS Tracking System MS03 User Guide* (chapter 4 "Getting Started").

The MS03 supports the following functions:

- Track by time interval or distance.
- Query historical trips.
- Set polygonal geo-fences.
- Bind driver and vehicle information.
- View various reports.
- Send commands in batches.
- Support OTA updates.

For details, see the *MEITRACK GPS Tracking System MS03 User Guide*.

8 Installing the T1

8.1 Installing GPS and GSM Antennas

GSM antenna

GPS antenna

Connect the GSM antenna to the connector which is labeled "GSM". The GSM antenna is non-directional, so you can hide it in any place of a vehicle.

Connect the GPS antenna to the connector which is labeled "GPS". It is recommended that the antenna is facing up to the sky and the antenna side with words is downwards. Secure the antenna by using double sided tapes.

Note: Do not install the GPS antenna at a metal covered place.

8.2 Installing an I/O Cable

The I/O cable is a 12-pin cable, including the power, analog input, digital temperature sensor input, and negative/positive input and output interfaces.

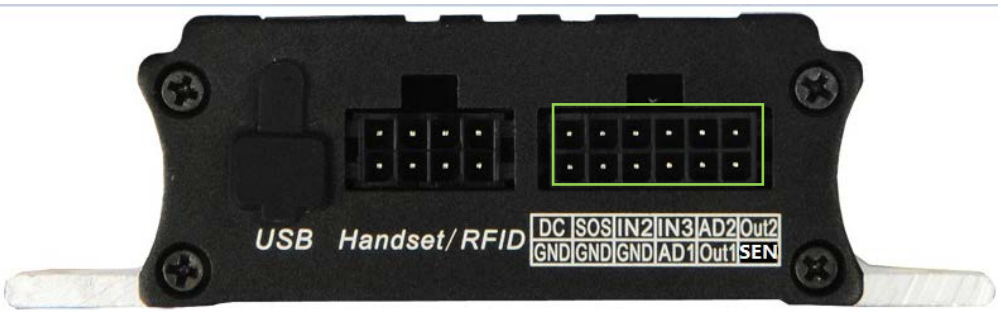

1 Power (+)	3 Input 1	5 Input 2	7 Input 3	9 Fuel level senso	11 Output 2
2 GND (-)	4 GND (-)	6 GND (-)	8 AD input 1	10 Output 1	12 1-Wire

Copyright © 2018 Meitrack Group All rights reserved.

Pin Number	Color	Description
1 (Power +)	Red	Positive charge of the power input, connected to the positive charge of the vehicle battery. Input voltage: 11–36 V. 12 V is recommended.
2 (GND)	Black	Ground wire, connected to the negative charge of the vehicle battery or to the negative terminal.
3 (Input 1)	White	Digital input 1, negative trigger (SOS button by default)
4 (GND)	Black	Ground wire, connected to input 1 (SOS button)
5 (Input 2)	White and brown	Digital input 2 (negative trigger) Connect to a door trigger signal cable to detect vehicle door status. (Most Chinese, Korean, and Japanese cars are negative edge-triggered.)
6 (GND)	Black	Ground wire It can be used as a ground wire connected to an analog sensor.
7 (Input 3)	White and red	Digital input 3 (positive trigger) Connect to the vehicle ACC cable by default to detect the vehicle ACC status.
8 (AD Input 1)	Blue	Analog input 1 with 12-bit resolution and valid voltage 0–6.6 V Connect to an external sensor, such as the fuel level sensor.
9 (Fuel level sensor input)	Blue and brown	Analog input 2 with 12-bit resolution and valid voltage 0–6.6 V The AD cable is equipped with a white plug. It is connected to the A53 fuel level sensor by default.
10 (Output 1)	Yellow	Output 1 Valid: low level (0 V) Invalid: open collector Maximum voltage for output open collector (invalid): 40 V Maximum current for output low voltage (valid): 400 mA Connect to an external relay to remotely cut off the vehicle fuel cable or engine power supply.
11 (Output 2)	Yellow and brown	Output 2 Valid: low level (0 V) Invalid: open collector Maximum voltage for output open collector (invalid): 40 V Maximum current for output low voltage (valid): 400 mA Connect to an external relay to remotely cut off the vehicle fuel cable or engine power supply.
12 (1-Wire)	Green	TTL3.3V level Connect to the A52 digital temperature sensor or iButton by default by using the A61 sensor box. Note: The DC or AC voltage that is greater than 3.3 V is not allowed. Otherwise, the device may be damaged.

8.2.1 Power Cable/Ground Wire (Pin 1/2)

Connect the power cable (red) and ground wire (black) to the positive and negative charges of the vehicle battery

Copyright © 2018 Meitrack Group All rights reserved.

respectively.

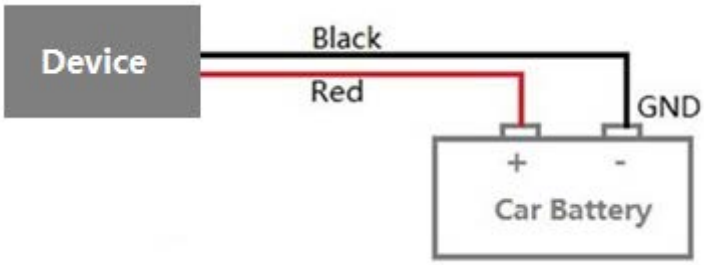

8.2.2 ACC and Door Detection (Pin 5/7)

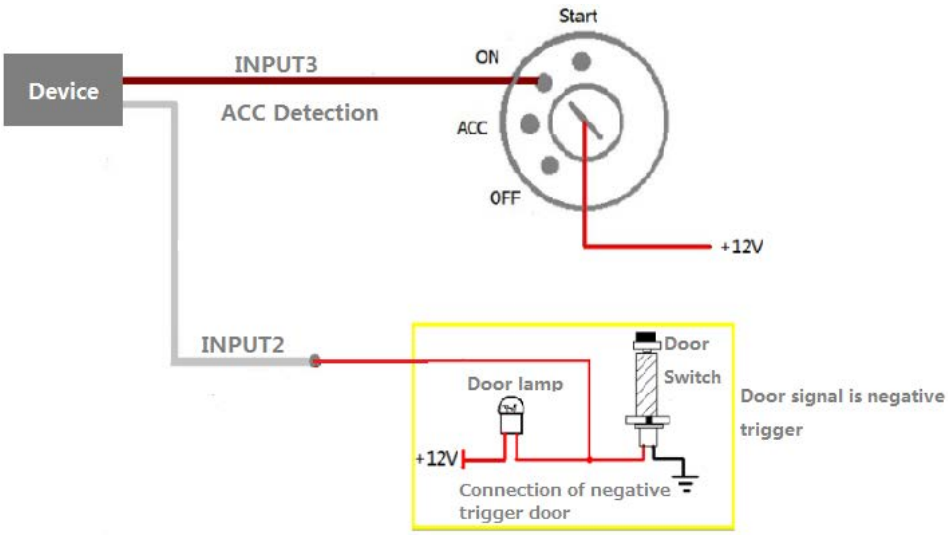

Note: If input 3 is connected to the "ACC" position, after the engine is started, the platform will read it as ON-OFF-ON. If input 3 is connected to the "Start" position, after the engine is started, the platform will read it as OFF-ON-OFF. If installed correctly, after the engine is started, the platform will read it as OFF-ON.

8.2.3 Output Control (Pin 10/11)

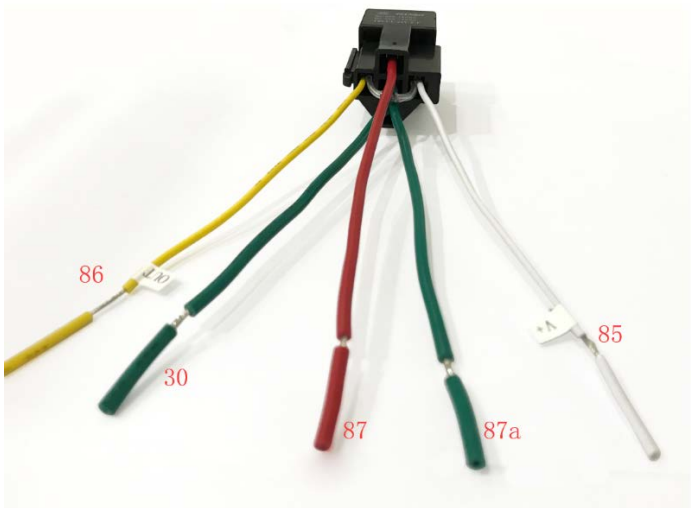

Copyright © 2018 Meitrack Group All rights reserved.

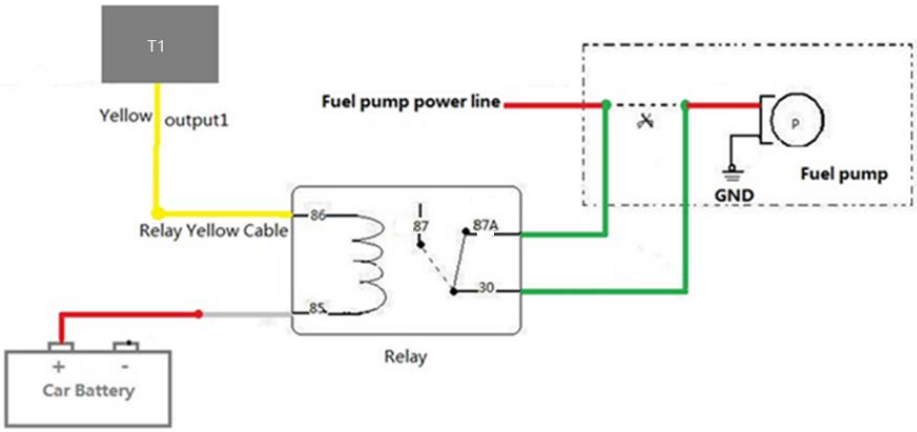

Note:

A. To implement remote fuel/power cut-off, connect the relay to the fuel pump power cable or to the engine power cable in series.

B. The white line of the relay must be connected with the power V+, and the yellow line must be connected with the OUT line of the equipment. It cannot be connected backwards. If the connection is wrong, the equipment may burn out.

8.2.4 Sensor Input

For pin 8 analog input 1, a sensor whose output voltage ranges from 0 V to 6.6 V can be installed. The analog voltage calculation formula is as follows:

Voltage = (AD x 3.3 x 2)/4096

Pin 9 is connected to the A53 fuel level sensor by default. You can install the sensor without calculation formula added on the platform. For details, see the *MEITRACK Fuel Level Sensor User Guide*.

Pin 12 is connected to A61+A52 temperature sensor or iButton by default. For details, see the *MEITRACK Temperature Sensor User Guide* and *MEITRACK iButton User Guide*.

Note:

- The white plug on the T1 harness consists of the power cable (red), ground wire (black), AD2 cable (blue), and SEN cable (green).
- The T1 can connect to a maximum of two A61 sensor boxes. You can install a maximum of eight A52 temperature sensor ports. For details, see the *MEITRACK Temperature Sensor User Guide*.

8.3 Installing the Speaker + microphone (RS232 Port)

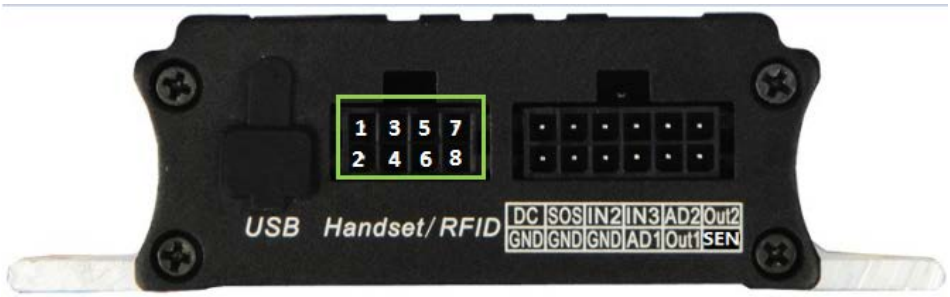

Pin Number	Color	Description

Copyright © 2018 Meitrack Group All rights reserved.

1	Red	Power output Output voltage: 5 V
2	Black	Ground wire
3	Orange	RX, T1 receives data from the Speaker + microphone.
4	Yellow	TX, T1 sends data to the Speaker + microphone.
5	Blue	Positive charge of the microphone
6	Green	Negative charge of the microphone
7	Purple	Positive charge of the speaker
8	White	Negative charge of the speaker

Note: The RS232 port can be used with either the RFID reader or the camera at a time.

8.4 Installing the RFID Reader (RS232 Port)

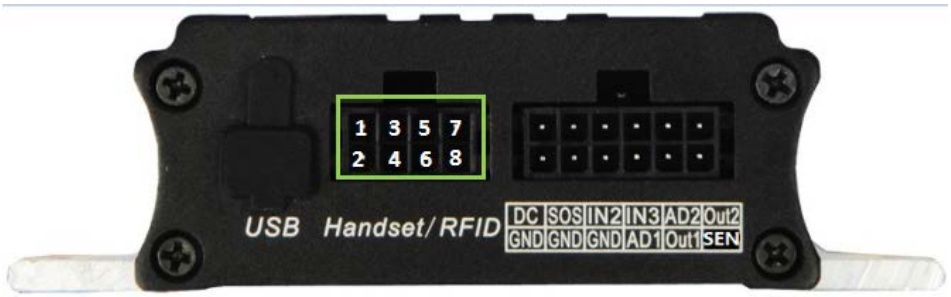

Pin Number	Color	Description
1	Red	Power output Output voltage: 5 V
2	Black	Ground wire
3	Green	RX, T1 receives data from the RFID reader.
4	White	Reserved (TX, T1 sends data to the RFID reader.)
Remarks: The T1 RFID reader is not compatible with the MVT600 RFID reader. In the MVT600, the RS232 port is a Wiegand port.		

Note: The RS232 port can be used with either the Speaker + microphone or the camera at a time.

8.5 Installing the Camera (RS232 Port)

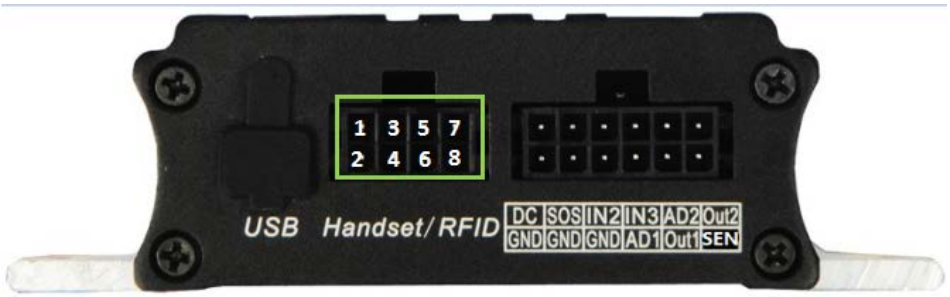

Pin Number	Color	Description

Copyright © 2018 Meitrack Group All rights reserved.

1	Red	Power output Output voltage: 5 V
2	Black	Ground wire
3	Green	RX, T1 receives data from the camera.
4	White	TX, T1 sends data to the camera.

To connect T1 to a camera, a 4-pin to 8-pin cable is required.

Note: The RS232 port can be used with either the Speaker + microphone or the RFID reader at a time.

8.6 Mounting the T1

Tighten the four screws shown in the following figure.

If you have any questions, do not hesitate to email us at info@meitrack.com.

Copyright © 2018 Meitrack Group All rights reserved.