Portable power analyzer

MYeBOX 150, MYeBOX 1500, MYeBOX-1500-4G

INSTRUCTION MANUAL

(M084B01-03-24B)

CE

SAFETY PRECAUTIONS

Follow the warnings described in this manual with the symbols shown below.

DANGER
Warns of a risk, which could result in personal injury or material damage.

ATTENTION
Indicates that special attention should be paid to a specific point.

If you must handle the unit for its installation, start-up or maintenance, the following should be taken into consideration:

Incorrect handling or installation of the device may result in injury to personnel as well as damage to the device. In particular, handling with voltages applied may result in electric shock, which may cause death or serious injury to personnel. Defective installation or maintenance may also lead to the risk of fire.

Read the manual carefully prior to connecting the device. Follow all installation and maintenance instructions throughout the device's working life. Pay special attention to the installation standards of the National Electrical Code.

Refer to the instruction manual before using the device

In this manual, if the instructions marked with this symbol are not respected or carried out correctly, it can result in injury or damage to the device and / or installations.

CIRCUTOR S.A.U. reserves the right to modify features or the product manual without prior notification.

DISCLAIMER

CIRCUTOR S.A.U. reserves the right to make modifications to the device or the unit specifications set out in this instruction manual without prior notice.

CIRCUTOR S.A.U. on its web site, supplies its customers with the latest versions of the device specifications and the most updated manuals.

www.circutor.com

CIRCUTOR S.A.U. recommends using the original cables and accessories that are supplied with the device.

CONTENTS

SAFETY PRECAUTIONS 3
DISCLAIMER 3
CONTENTS 4
REVISION LOG 6
SYMBOLS 6
1.- VERIFICATION UPON RECEPTION 7
2.- PRODUCT DESCRIPTION 8
3.- DEVICE INSTALLATION 10
3.1.- PRELIMINARY RECOMMENDATIONS 10
3.2.- BATTERY INSTALLATION 11
3.3.- INSTALLATION 13
3.3.1.- MAGNETIC FASTENING STRAP 13
3.4.- MYeBOX 480V ~ PSU ADAPTER : POWER SUPPLY ADAPTER 14
3.5.- VOLTAGE CABLES 16
3.6.- CURRENT CLAMPS 16
3.7.- DEVICE TERMINALS 17
3.7.1.- MYeBOX 150 17
3.7.2.- MYeBOX 1500 and MYeBOX-1500-4G 18
3.8.- CONNECTION DIAGRAMS 20
3.8.1.- THREE-PHASE NETWORK MEASURING WITH A 4-WIRE CONNECTION (MYeBOX 150). 20
3.8.2.- THREE-PHASE NETWORK MEASURING WITH A 4-WIRE CONNECTION (MYeBOX 1500, MYeBOX-1500-4G). 21
3.8.3.- THREE-PHASE NETWORK MEASURING WITH A 3-WIRE CONNECTION (MYeBOX 150, MYeBOX1500, MYeBOX-1500-4G). 22
3.8.4.- THREE-PHASE NETWORK MEASURING WITH A 3-WIRE CONNECTION AND ARON CONNECTION (MYeBOX 150, MYeBOX 1500, MYeBOX-1500-4G). 23
3.8.5.- TWO-PHASE NETWORK MEASURING WITH A 3-WIRE CONNECTION, MYeBOX 150. 24
3.8.6.- TWO-PHASE NETWORK MEASURING WITH A 3-WIRE CONNECTION (MYeBOX 1500, MYeBOX-1500-4G). 25
3.8.7.- SINGLE-PHASE NETWORK MEASUREMENT, PHASE TO PHASE, WITH A 2-WIRE CONNECTION (MYeBOX 150, MYeBOX 1500, MYeBOX-1500-4G) 26
3.8.8.- SINGLE-PHASE NETWORK MEASUREMENT, PHASE TO NEUTRAL, WITH A 2-WIRE CONNECTION (MYeBOX 150) 27
3.8.9.- SINGLE-PHASE NETWORK MEASUREMENT, PHASE TO NEUTRAL, WITH A 2-WIRE CONNECTION (MYeBOX 1500, MYeBOX-1500-4G). 28
3.8.10.- DETAIL OF THE CURRENT MEASUREMENT CONNECTION 29
3.8.11.- LEAKAGE CURRENT CONNECTION, ILeak. (MYeBOX 1500, MYeBOX-1500-4G MODELS) 29
3.9.- REGISTERING AND UPDATING THE DEVICE 30
4.- OPERATION 31
4.1.- OPERATING PRINCIPLE 31
4.2.- MEASUREMENT PARAMETERS 32
4.2.1.- QUALITY PARAMETERS 33
4.3.- KEYPAD FUNCTIONS 35
4.4.- DISPLAY 36
4.5.- LED INDICATORS 37
4.5.1.- MYeBOX 150. 37
4.5.2.- MYeBOX 1500 / MYeBOX-1500-4G. 39
4.6.- INPUTS (MYeBOX 1500 / MYeBOX-1500-4G model) 41
4.7.- OUTPUTS (MYeBOX 1500 / MYeBOX-1500-4G model) 41
4.8.- DATA LOGGING 41
4.8.1. DATABASE 41
4.8.2. MicroSD MEMORY 42
5.- DISPLAY 48
5.1.- DISPLAY MENU: MEASURE 50
5.2.- DISPLAY MENU: DEVICE PROFILE 52
5.3.- DISPLAY MENU: QUALITY 53
5.4.- DISPLAY MENU: COMMUNICATIONS 54
5.5.- DISPLAY MENU: DATE/TIME 55
5.6.- DISPLAY MENU: INFORMATION 56
5.7.- DISPLAY MENU: ENERGY RATIOS 58

6.- CONFIGURATION 60
6.1.- SETUP MENU: MEASURE SETUP 61
6.1.1.- RATED VOLTAGE 61
6.1.2.- PRIMARY VOLTAGE 62
6.1.3.- SECONDARY VOLTAGE 62
6.1.4.- PHASE CLAMP SCALE 63
6.1.5.- PRIMARY WINDING OF THE CURRENT TRANSFORMER 63
6.1.6.- NEUTRAL CLAMP SCALE 64
6.1.7.- PRIMARY WINDING OF THE NEUTRAL CURRENT TRANSFORMER 64
6.1.8.- CLAMP SCALE FOR MEASURING THE LEAKAGE CURRENT, ILeak 65
6.1.9.- PRIMARY WINDING OF THE LEAKAGE CURRENT TRANSFORMER 65
6.1.10.- FREQUENCY 66
6.1.11.- SAVE 66
6.1.12.- EXIT 66
6.2.- SETUP MENU: DEVICE PROFILE SETUP 67
6.2.1.- NAME OF THE DEVICE 67
6.2.2.- MEASUREMENT NAME 67
6.2.3.- TYPE OF INSTALLATION 68
6.2.4.- SAVE 68
6.2.5.- EXIT 68
6.3.- SETUP MENU: QUALITY SETUP 69
6.3.1.- OVERVOLTAGE, SWELL 69
6.3.2.- GAP, SAG 69
6.3.3.- OUTAGE, INTERRUPTION 70
6.3.4.- TRANSIENTS, DISTURB 70
6.3.5.- SAVE 71
6.3.6.- EXIT 71
6.4.- SETUP MENU: COMMUNICATIONS SETUP 71
6.4.1.- Wi-Fi CONFIGURATION 71
6.4.2.- SSID 72
6.4.3.- WPS 72
6.4.4.- PASSWORD 73
6.4.5.- ENABLING 3G / 4G COMMUNICATIONS 73
6.4.6.- APN, ACCESS POINT NAME 74
6.4.7.- APN, USER 74
6.4.8.- APN, PASSWORD 75
6.4.9.- PIN 75
6.4.10.- SAVE 76
6.4.11.- EXIT 76
6.5.- SETUP MENU: MEMORY SETUP 76
6.5.1.- COMPLETE DELETION OF THE DATABASE 76
6.5.2.- SAVE 77
6.5.3.- EXIT 77
6.6.- SETUP MENU: RESET FACTORY SETUP 78
6.6.1.- LOADING THE DEFAULT CONFIGURATION. 78
6.6.2.- SAVE 78
6.6.3.- EXIT 78
7.- WIRELESS COMMUNICATIONS 79
7.1.- USAGE ENVIRONMENT AND HEALTH 79
7.2.- LOCATION OF THE ANTENNAS 80
7.3.- Wi-Fi COMMUNICATIONS 80
7.4.- 3G (MYeBOX 1500 model) / 4G (MYeBOX-1500-4G model) COMMUNICATIONS 81
7.4.1.- INSERTING THE SIM CARD 81
8.- MOBILE APPLICATION MYEBOX 82
9.- MYeBOX Cloud 82
10.- SOFTWARE UPDATE 82
10.1.- UPDATING THROUGH USB 82
10.2.- UPDATING THROUGH THE MOBILE APPLICATION 83
11.- TECHNICAL FEATURES 84
12.- MAINTENANCE AND TECHNICAL SERVICE 88
13.- GUARANTEE 88
14.- EU DECLARATION OF CONFORMITY 89

REVISION LOG

Table 1: Revision log.

Date	Revision	Description
10/16	M084B01-03-15A	Initial Version
11/16	M084B01-03-16A	Changes in the following sections: 1. - 3.2. - 3.5. - 11.
10/17	M084B01-03-17A	Changes in the following sections: 3.2. - 3.5. - 3.8. - 4.2. - 4.2.1. - 4.5.2. - 4.8.2.3. - 5.6. - 6.1.- 6.3.4. - 11.- 14.
02/18	M084B01-03-18A	Changes in the following sections: 3.2.- 3.4.- 11.
06/18	M084B01-03-18B	Changes in the following sections: 4.2. - 4.8.2.3. - 5. - 5.1. - 5.4. - 5.7. - 6.1.1 - 7.3. - 7.4. - 11.
06/19	M084B01-03-19A	Changes in the following sections: 3.4. - 4.2. - 4.2.1. - 4.8.2.3. - 6.4.4. - 6.4.8. - 10. - 11.
09/21	M084B01-03-21A	Changes in the following sections: 4.2. - 5. - 5.6. - 6.1.1.
07/22	M084B01-03-22A	Changes in the following sections: 1. - 2. - 3.5. - 3.6. - 3.7.2. - 3.8. - 4.1. - 4.5.2. - 4.6. - 4.7. - 5.4. - 6.1.8. - 6.1.9. - 6.4.5. - 6.4.6. - 6.4.7. - 6.4.9. - 7. - 7.2. - 7.4. - 8. - 11.
01/24	M084B01-03-24A	Changes in the following sections: 3.5. - 11.
05/24	M084B01-03-24B	Changes in the following sections: Symbols - 3.4. - 11.

SYMBOLS

Table 2: Symbols.

Symbol	Description
CE	In compliance with the relevant European directive.
⧈	Safety category of the device : Class II
	Device covered by European directive 2012/19/EC. At the end of its useful life, do not leave the unit in a household waste container. Follow local regulations on electronic equipment recycling.
⎓	DC current
~	AC current

Note: *The images of the devices are for illustrative purposes only and may differ from the original device.*

1.- VERIFICATION UPON RECEPTION

Check the following points when you receive the device:

a) The device meets the specifications described in your order.
b) The device has not suffered any damage during transport.
c) Perform an external visual inspection of the device prior to switching it on.
d) Check that it has been delivered with the following:

Kit A_MYeBOX 150, Kit A_MYeBOX 1500 and **Kit A_MYeBOX-1500-4G:**

- An installation guide.
- 1 battery.
- 1 AC power supply adaptor.
- 1 Wi-Fi antenna.
- 1 3G antenna (**Kit A_MYeBOX 1500**) or 4G (**Kit A_MYeBOX-1500-4G**).
- 1 µUSB cable.
- **MYeBOX** markers in 9 colours.
- Wireless connector for the transistor's digital inputs/outputs (**Kit A_MYeBOX 1500** and **Kit A_MYeBOX-1500-4G**).

Kit MYeBOX 150, Kit MYeBOX 1500 and **Kit MYeBOX-1500-4G:**

- An installation guide.
- 1 battery.
- 1 AC power supply adaptor.
- 1 Wi-Fi antenna.
- 1 3G antenna (**Kit MYeBOX 1500**) or 4G (**Kit MYeBOX-1500-4G**).
- 1 µUSB cable.
- **MYeBOX** markers in 9 colours.
- 4 UL 600 V CAT III voltage cables (5 in **Kit MYeBOX 1500** and **Kit MYeBOX-1500-4G**).
- 4 UL 600 V CAT III crocodile clamp (5 in **Kit MYeBOX 1500** and **Kit MYeBOX-1500-4G**).
- Wireless connector for the transistor's digital inputs/outputs (**Kit MYeBOX 1500** and **Kit MYeBOX-1500-4G**).
- Carrying case.

If any problem is noticed upon reception, immediately contact the transport company and/or **CIRCUTOR's** after-sales service.

2.- PRODUCT DESCRIPTION

MYeBOX is a portable analyzer that measures, calculates and displays the main parameters of any electrical installation (single-phase, two-phase with and without neutral, balanced or unbalanced three-phase and through an ARON connection)
MYeBOX can be fully configured remotely and can display electrical parameters on a smartphone or tablet using a mobile application connected to a Wi-Fi network.

There are 3 device models:

- ✓ **MYeBOX 150**.
- ✓ **MYeBOX 1500**.
- ✓ **MYeBOX-1500-4G**.

The **MYeBOX 150** features:

- **4 inputs** for measuring voltage: L1, L2, L3 and N.
- **4 inputs** for measuring current: L1, L2, L3 and N.
- **5 keys** and **2 buttons** that allow you to browse between the various screens and program the device.
- **14 indicator LEDs**: on, battery status, log, measurement input connection, memory status and Wi-Fi connection.
- **LCD Display**, for viewing parameters.
- **Wi-Fi** communications.
- 1 **µUSB** connector to connect and download data to a PC.

The **MYeBOX 1500 / MYeBOX-1500-4G** features:

- **5 inputs** for measuring voltage: L1, L2, L3, N and reference voltage URef.
- **5 inputs** for measuring current: L1, L2, L3, N and leakage current.
- **5 keys** and **2 buttons** that allow you to browse between the various screens and program the device.
- **21 indicator LEDs**: on, battery status, log, measurement input connection, memory status, Wi-Fi connection and 3G connection.
- **LCD Display**, for viewing parameters.
- **2 digital inputs**.
- **2 transistor outputs.**
- **3G** communications **(MYeBOX 1500)**.

- **4G** communications **(MYeBOX-1500-4G)**.
- **Wi-Fi** communications.
- 1 **µUSB** connector to connect and download data to a PC.

The **MYeBOX** mobile application lets you fully program the **MYeBOX** remotely, configure the measurement, display the most important parameters and send logs to **MYeBOX Cloud**.

3.- DEVICE INSTALLATION

3.1.- PRELIMINARY RECOMMENDATIONS

In order to use the device safely, it is essential that the individuals who handle it follow the safety measures set out in the standards of the country where it is being used, use the necessary personal protective equipment (rubber gloves, facial protection, and approved fireproof clothing) to avoid injury from shocks or electric arc from exposure to live conductors, and pay attention to the various warnings included in this instruction manual.

The **MYeBOX** device must be installed by authorised and qualified staff.

The power supply plug must be disconnected and measuring systems switched off before handling, altering the connections or replacing the device. It is dangerous to handle the device while it is powered.

Also, it is critical to keep the cables in perfect condition to avoid accidents, personal injury and damage to installations.

The device's functionality is limited to the category of measuring voltage or specific current values.

The manufacturer of the device is not responsible for any damage resulting from failure by the user or installer to heed the warnings and/or recommendations set out in this manual, nor for damage resulting from the use of products or accessories that did not come with the device or that were made by other manufacturers.

Inspect the device prior to each use. Check that it has no cracks and no pieces are missing from the housing.

If an anomaly or malfunction is detected in the device, do not use the device to take any measurements.

Inspect the work area before taking any measurements. Do not take measurements in dangerous, humid or wet areas or blasting areas.

Disconnect the device from the power supply (device and measuring system power supply) before maintaining, repairing or handling the device's connections.
Please contact the after-sales service if you suspect that there is an operational fault in the device.

3.2.- BATTERY INSTALLATION

⚠	Do not disassemble or modify the battery. The warranty does not cover any battery not delivered by **Circutor** or batteries that have been disassembled or modified.
⚠	There is a risk of explosion if installed incorrectly. To avoid possible damage: - Only install the batteries supplied or recommended by **Circutor**. - Keep the battery away from fire and high-temperature lights. - Do attempt to disassemble it. - Do not expose it to water. - Do not short-circuit it. - Do not hit the battery.
⚠	When disposing of the battery, comply with local laws and ordinances. Do not dispose of it with household waste. At the end of its useful life, dispose of the product at a specific collection point for electrical or electronic equipment.
⚠	To avoid electric shocks, disconnect the measuring and power supply terminals before opening the cover. Do not use the device without the cover in place.

The battery's cover is located on the underside of the device, as shown in **Figure 1**.

Figure 1:Location of the battery.

Unscrew the cover fastening screws with a flathead screwdriver and slide the cover off the device. (**Figure 2**)

Figure 2:Removal of the battery cover.

Connect the battery, **Figure 3**.

Figure 3:Connect the battery.

Insert the connection cable inside the battery cover, **Figure 4**.

Figure 4:Insert the connection cable inside the battery cover.

Insert the battery into its correct position and replace the cover. (**Figure 5**)

Be careful not to pinch the battery cables when inserting it.

Figure 5: Inserting the battery.

Disconnect the battery if the device is going to be idle for more than 3 months.

If the device has been without power for more than 4 weeks, it is recommended to load a few hours before use.

The battery reaches its maximum capacity after it is fully charged and discharged a few times.

Do not charge the battery at temperatures above **40°C** or below **0°C**.
Battery charger selected is not for outdoor use.

3.3.- INSTALLATION

Terminals, opening covers or removing elements can expose parts that are hazardous to the touch while the device is powered. Do not use the device until it is fully installed.

3.3.1.- MAGNETIC FASTENING STRAP

The **MYeBOX** has an optional fastening strap.

Figure 6: Fastening strap.

To install the strap on the device, follow these steps:

Figure 7: Installation of the fastening strap: Steps 1 and 2.

Figure 8: Installation of the fastening strap: Steps 3 and 4.

3.4.- MYeBOX 480V ~ PSU ADAPTER : POWER SUPPLY ADAPTER

Note: *The MYeBOX 480V ~ power supply adapter is an accessory sold separately.*

The **MYeBOX 480V~ PSU ADAPTER** is a highly efficient universal power supply adapter, designed to power and charge the **MYeBOX** portable power analyser.
Designed for CAT IV 300 V, it operates at 230V ... 480V ~

The adapter comes with banana cables, which allow it to be connected to the majority of systems, and an adapter cable to connect it to the **MYeBOX** analyser.

Table 3:MYeBOX 480V~ PSU ADAPTER Technical features.

TECHNICAL FEATURES	
Power supply	
Input	
Rated voltage	230 ... 480 V ~
Frequency	47 ... 63 Hz
Consumption	8 ... 47 VA
Installation category	CAT IV 300 V
Output	
Maximum output voltage	370 Vpeak
Maximum output current	1.5 A peak

Table 3 (Continuation): MYeBOX 480V~ PSU ADAPTER Technical features.

Output	
Environmental features	
Operating temperature	0°C ... +40°C
Storage temperature	-20°C ... +70°C
Relative Humidity (non-condensing)	5 ... 95 %
Maximum altitude	2000 m
Protection degree	IP30
Mechanical features	
Dimensions	78.8 x 78.8 x 53.1 mm
Weight	168 g.
Enclosure	ABS (UL-94-V0)
Standars	
UNE-EN 61010-1:2011, UNE-EN 61000-6-2:2006, UNE-EN 61010-6-4:2007	

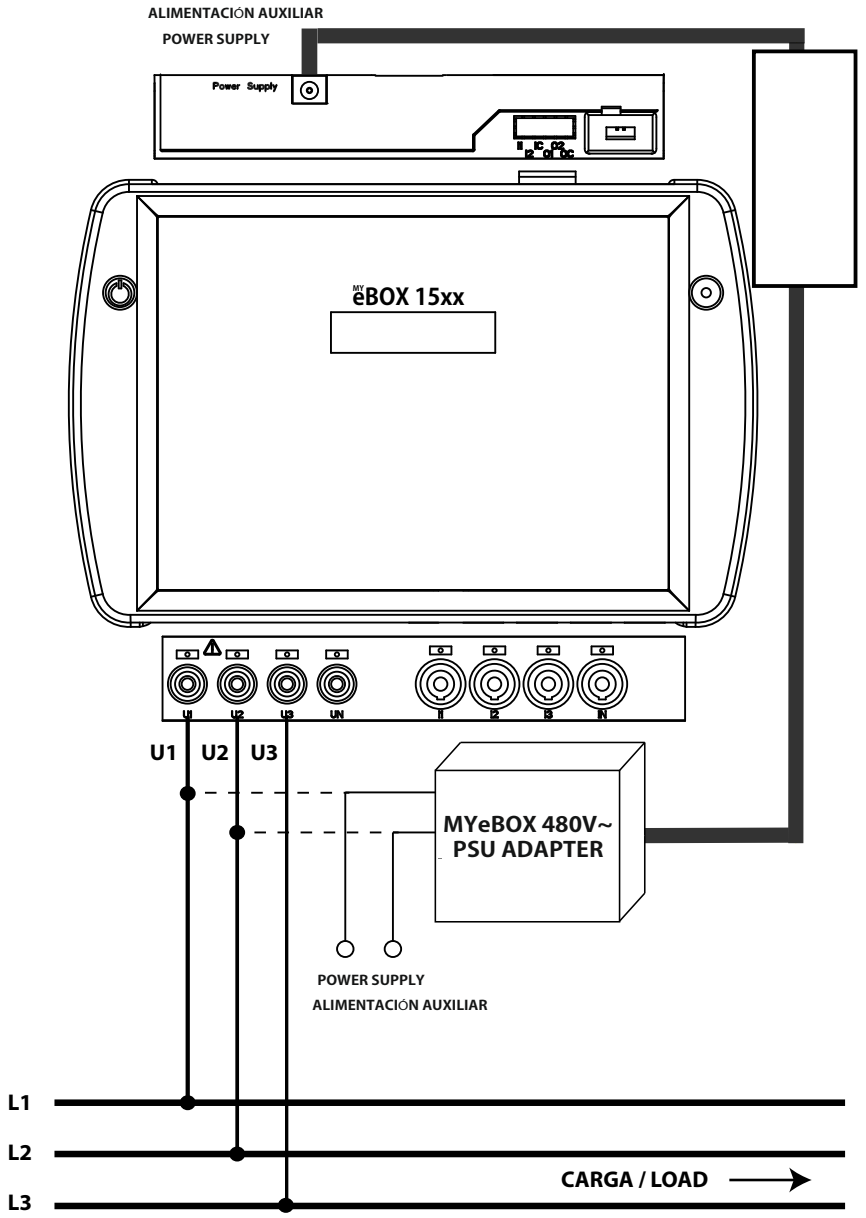

Figure 9:MYeBOX 480V~ PSU ADAPTER connection.

3.5.- VOLTAGE CABLES

To measure voltage, you must use 600 V CAT III or CAT IV 600V double-insulated connection cables.

The **Kit B_MYeBOX 150, Kit B_MYeBOX 1500 and Kit B_MYeBOX-1500-4G** kits come with the necessary cables:

- UL 600 V CAT III double-insulated voltage cables, or higher.
- UL 600 V CAT III crocodile clamps

Coloured markers are included with the devices to identify the measuring channels according to each country's standard.

Table 4: Cable colours: European (IEC 60445 :2010).

Phase	Cable colour
L1	Brown
L2	Black
L3	Grey
N	Light blue
I Leak	Maroon
Earth	Green / Yellow

3.6.- CURRENT CLAMPS

The current may be measured using current clamps or transformer clamps.
The device automatically recognises the clamps that are connected to it and shows the necessary parameters in the setup menu. (*"6.1.- SETUP MENU: MEASURE SETUP"*)

Using clamps is necessary **IEC 61010-2-032**.

✓ **Phase and neutral current measurement:**

Table 5: Clamps and transformers for measuring the phase current and the neutral current.

Type	Scale	Measurement range	Accuracy[1]
CPG-5	-	0.05 ... 5 A	0.2% (3 % ... 120% In)
CPG-100	-	1 ... 100 A	0.2% (3 % ... 120% In)
CPRG-500	-	1 ... 500 A	0.2% (3 % ... 120% In)
CPRG-1000	-	1 ... 1000 A	0.2% (3 % ... 120% In)
CPG-200/2000	LOW	1 ... 200 A	0.2% (3 % ... 120% In)
	HI	10 ... 2000 A	0.2% (3 % ... 120% In)
FLEX-Rxxx	LOW	100 A	1% (10 % ... 200% In)
	MEDIUM	1000 A	1% (10 % ... 200% In)
	HI	10000 A	1% (10 % ... 200% In)
Transformer .../ 0.333V	-	1% ... 200% In	1% (1% ... 19% In) 0.5% (20% ... 120% In)
Transformer .../ 0.250A	-	1% ... 200% In	0.5% (1% ... 200% In)

[1] Accuracy is given by the following measurement conditions for input 2V: exclusion of errors produced by the clamps and external voltage transformers, with a range in temperature of 5 ... 45 °C and power factor 0 ... 1.

The 3 phase clamps L1, L2 and L3 must be of the same type. Otherwise, an error event is logged in the **EVA** file; in this case measurements can be taken with the device using the features of the L1 clamp.

✓ **Measurement of the leakage current, ILeak** (**MYeBOX 1500 and MYeBOX-1500-4G** model)**:**

Table 6: Clamps and transformers for measuring the leakage current.

Type	Scale	Measurement range	Accuracy [2]
CFG-5	-	0.01 ... 5 A	0.2% (3 % ... 200% In)
CFG-10	-	0.02 ...10 A	0.2% (3 % ... 200% In)
Transformer WG	-	1% ... 500% In	1% (10% ... 200% In)

[2] Accuracy is given by the following measurement conditions for input 2V: exclusion of errors produced by the clamps and external voltage transformers, with a range in temperature of 5 ... 45 °C and power factor 0 ... 1.

Note: *Transformers must be connected to the device with connectors and the corresponding EEPROM in order for them to work.*

3.7.- DEVICE TERMINALS

3.7.1.- MYeBOX 150

Table 7:List of terminals on the lower face of the MYeBOX 150.

Device terminals on the lower face of the MYeBOX 150	
1: U1, Voltage input L1	**5: I1**, Current input L1
2: U2, Voltage input L2	**6: I2**, Current input L2
3: U3, Voltage input L3	**7: I3,** Current input L3
4: UN, Voltage input neutral	**8: IN**, Neutral current input

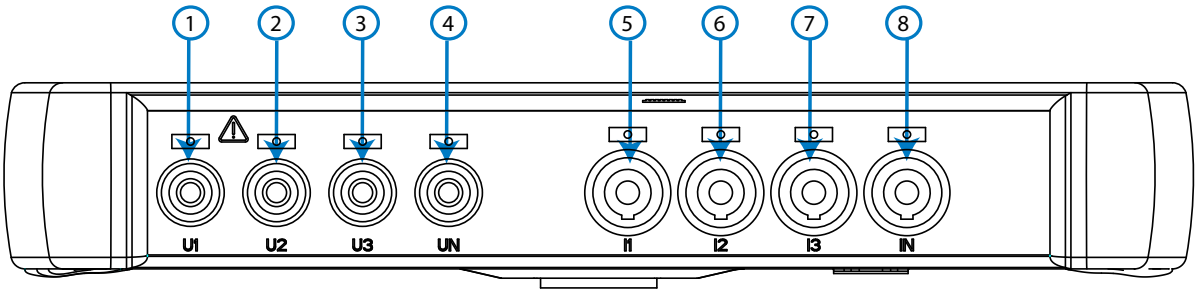

Figure 10:MYeBOX 150 terminals, lower face.

Table 8:List of terminals on the upper face of the MYeBOX 150.

Device terminals on the upper face of the MYeBOX 150	
9: Power Supply, auxiliary power supply.	**10: µUSB**, µUSB connector.

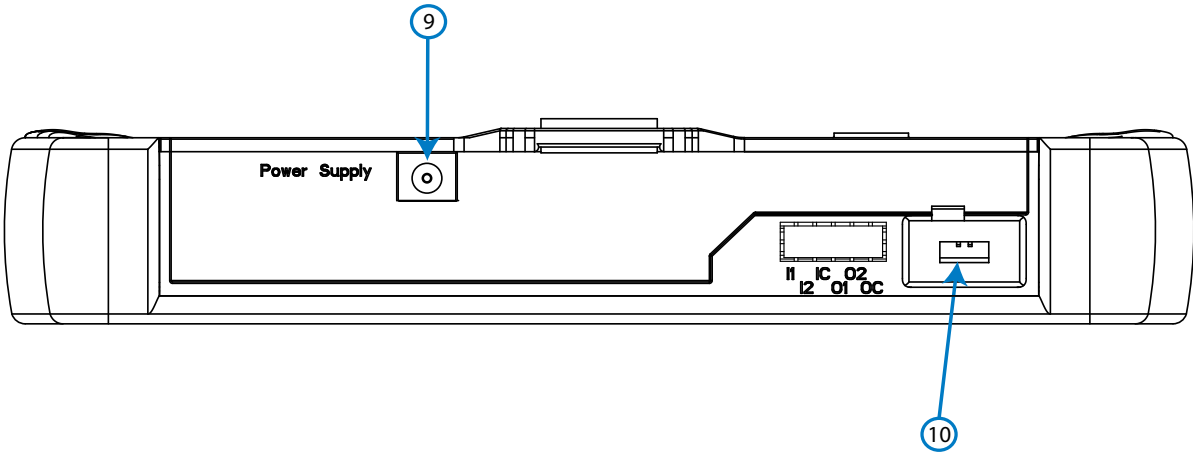

Figure 11:MYeBOX 150 terminals, upper face.

3.7.2.- MYeBOX 1500 and MYeBOX-1500-4G

Table 9:List of terminals on the lower face of the MYeBOX 1500 / MYeBOX-1500-4G.

Device terminals on the lower face of the MYeBOX 1500 / MYeBOX-1500-4G	
1: U1, Voltage input L1	**6: I1**, Current input L1
2: U2, Voltage input L2	**7: I2**, Current input L2
3: U3, Voltage input L3	**8: I3,** Current input L3
4: UN, Voltage input neutral	**9: IN**, Neutral current input
5: URef, Reference voltage input.	**10: ILeak**, Leakage current input

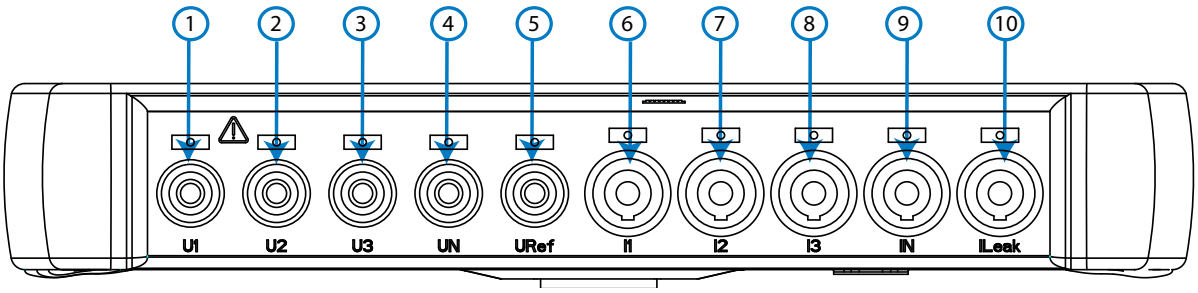

Figure 12:MYeBOX 1500 / MYeBOX-1500-4G terminals, lower face.

Table 10:List of terminals on the upper face of the MYeBOX 1500 / MYeBOX-1500-4G.

Device terminals on the upper face of the MYeBOX 1500 / MYeBOX-1500-4G	
11: Power Supply, auxiliary power supply.	**15: O1**, Transistor output 1
12: I1, Digital input 1	**16: O2**, Transistor output 2
13: I2, Digital input 2	**17: OC,** GND for transistor outputs
14: IC, GND for digital inputs	**18: µUSB**, µUSB connector.

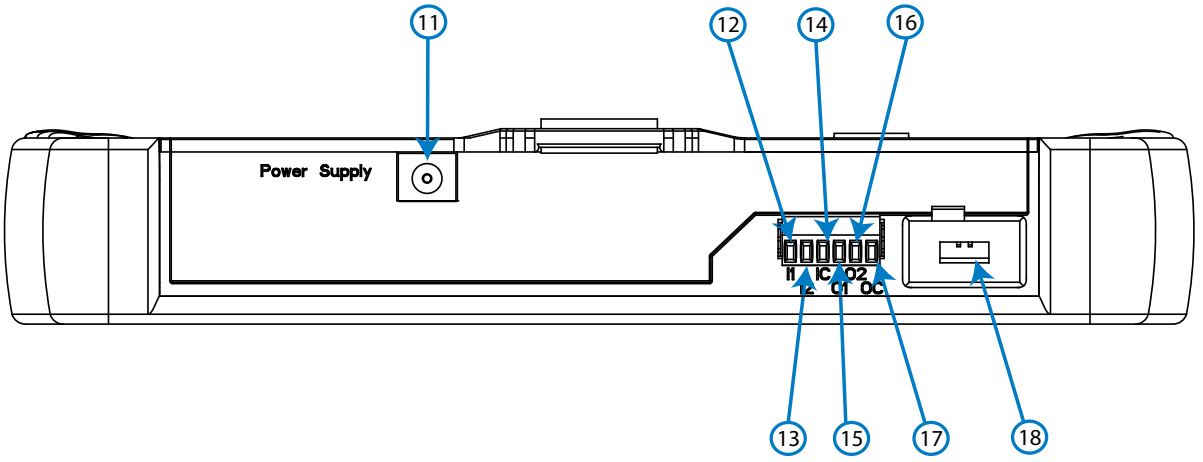

Figure 13:MYeBOX 1500 / MYeBOX-1500-4G terminals, upper face.

3.8.- CONNECTION DIAGRAMS

3.8.1.- THREE-PHASE NETWORK MEASURING WITH A 4-WIRE CONNECTION (MYeBOX 150).

Type of installation (Select circuit)[3]***:*** *3 Phases + Neutral.*

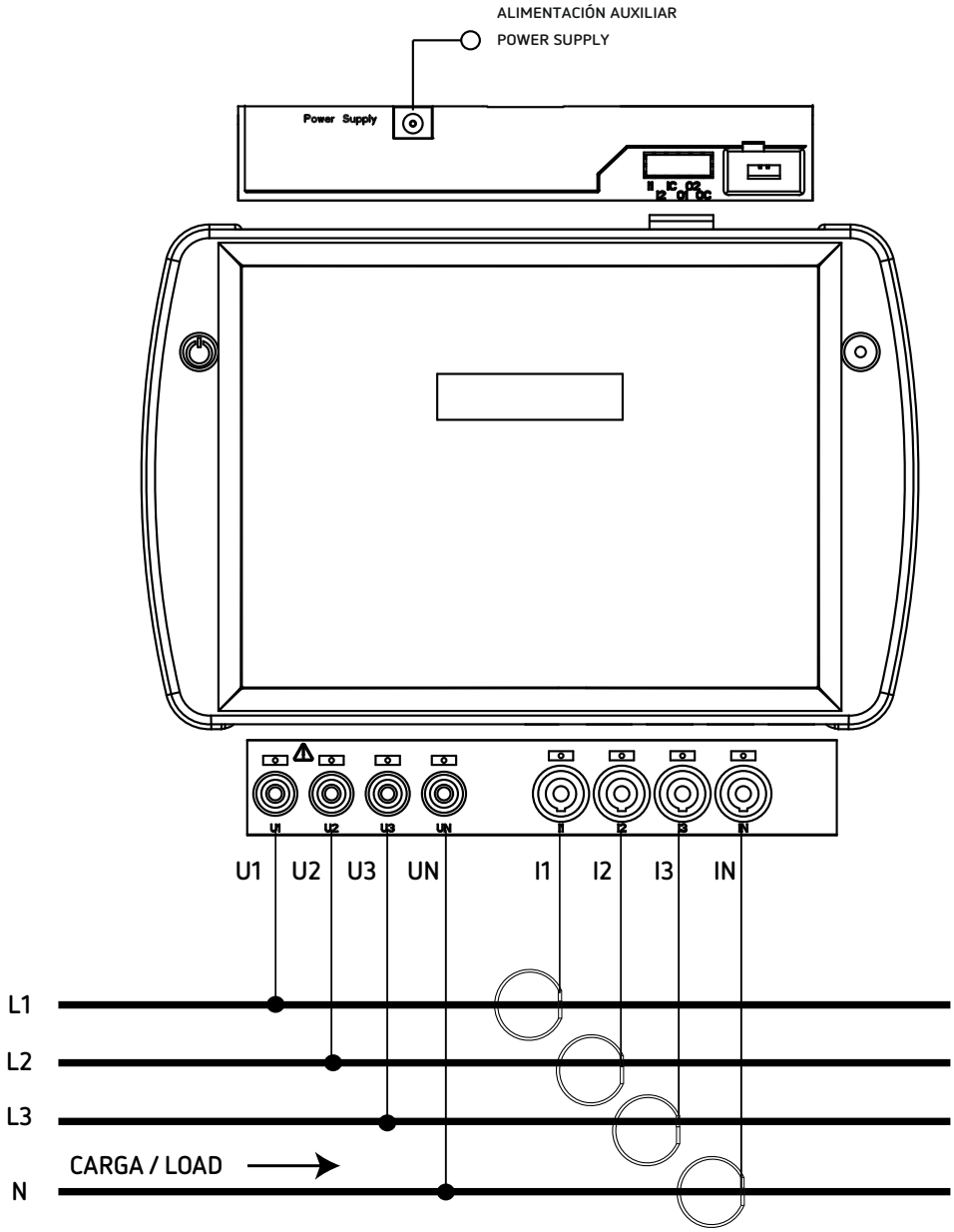

Figure 14: Three-phase measuring with a 4-wire connection (MYeBOX 150).

Note: See section "*3.8.10.- DETAIL OF THE CURRENT MEASUREMENT CONNECTION.*"

[3] See *"5.2.- DISPLAY MENU: DEVICE PROFILE"*

3.8.2.- THREE-PHASE NETWORK MEASURING WITH A 4-WIRE CONNECTION (MYeBOX 1500, MYeBOX-1500-4G).

Type of installation (Select circuit)[4]***:*** *3 Phases + Neutral.*

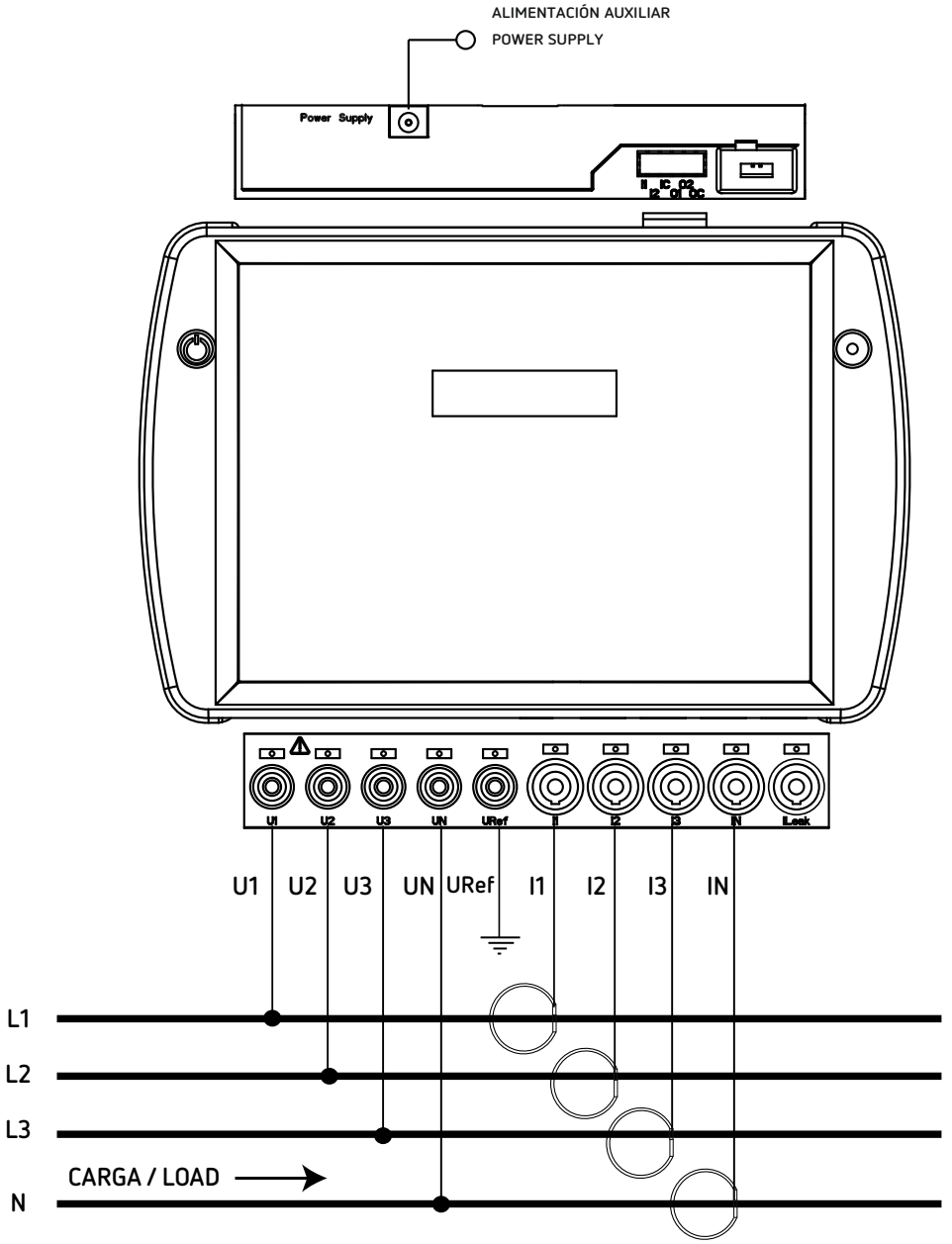

Figure 15: Three-phase measuring with a 4-wire connection (MYeBOX 1500, MYeBOX-1500-4G).

Note: See section "*3.8.10.- DETAIL OF THE CURRENT MEASUREMENT CONNECTION.*"

[4] See *"5.2.- DISPLAY MENU: DEVICE PROFILE"*

3.8.3.- THREE-PHASE NETWORK MEASURING WITH A 3-WIRE CONNECTION (MYeBOX 150, MYeBOX1500, MYeBOX-1500-4G).

Type of installation (Select circuit)[5]*:* *3 Phases.*

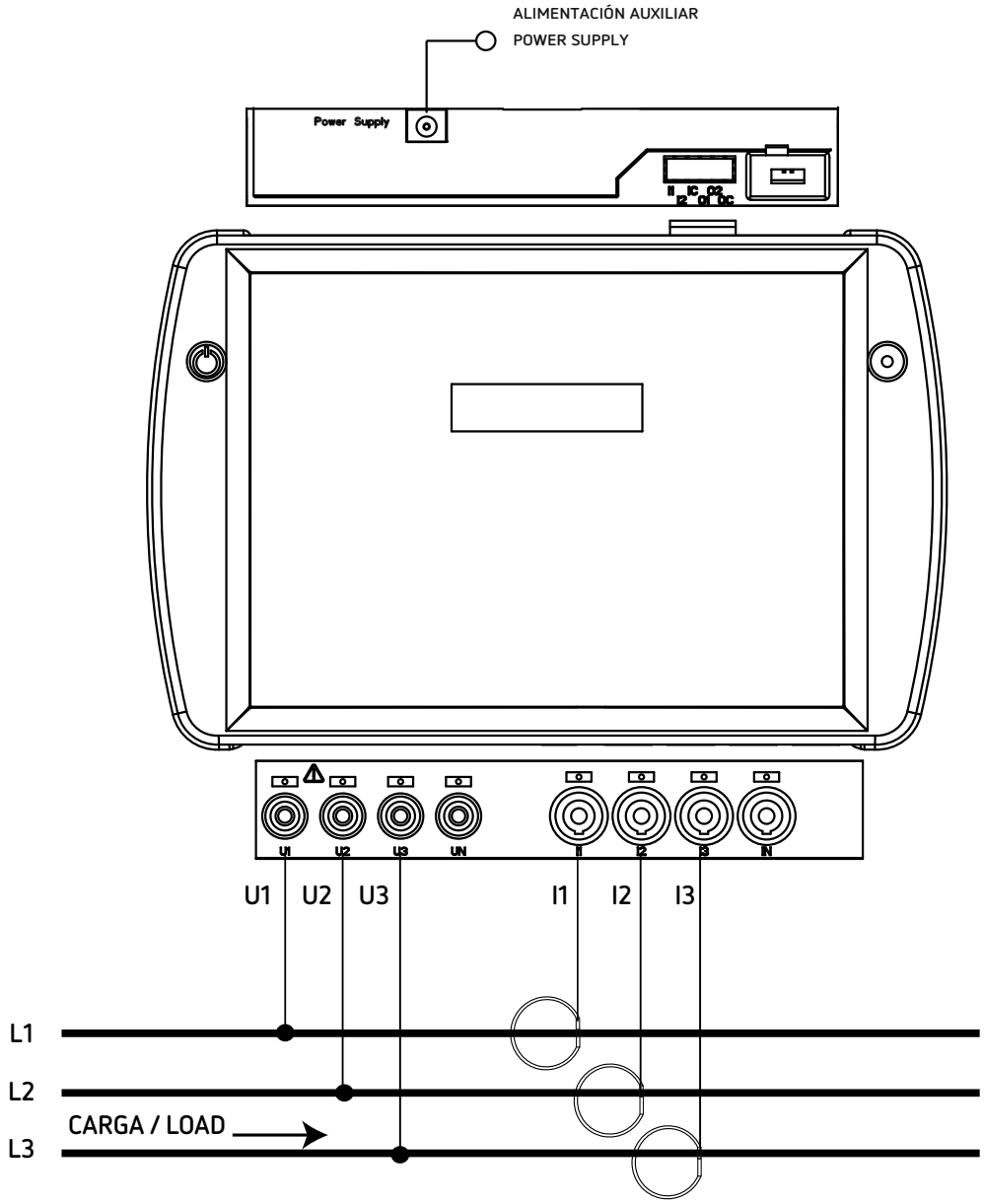

Figure 16: Three-phase measuring with a 3-wire connection (MYeBOX 150, MYeBOX 1500, MYeBOX-1500-4G).

Note: See section "*3.8.10.- DETAIL OF THE CURRENT MEASUREMENT CONNECTION.*"

[5] See *"5.2.- DISPLAY MENU: DEVICE PROFILE"*

3.8.4.- THREE-PHASE NETWORK MEASURING WITH A 3-WIRE CONNECTION AND ARON CONNECTION (MYeBOX 150, MYeBOX 1500, MYeBOX-1500-4G).

Type of installation (Select circuit)[6]*:* *Aron.*

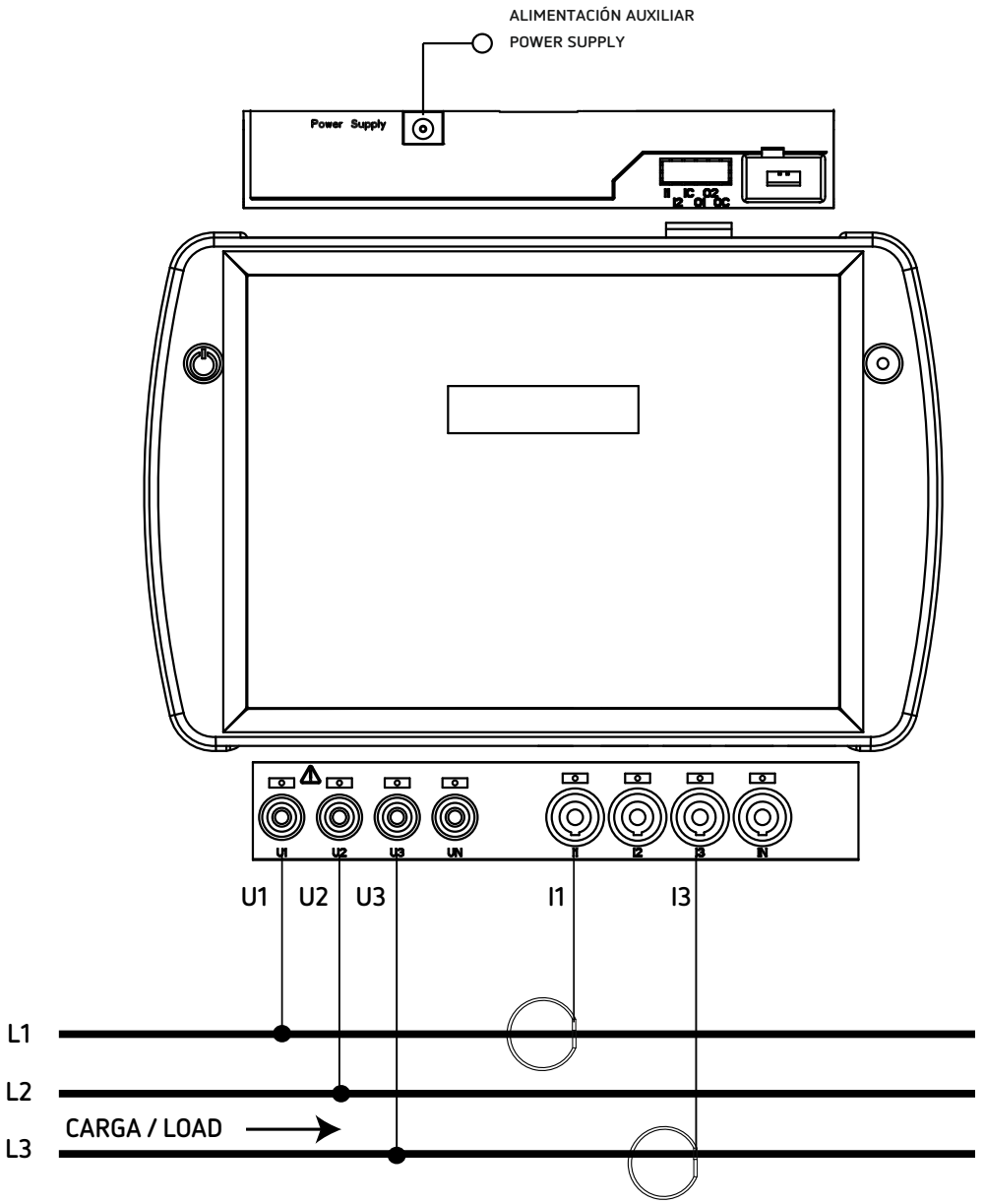

Figure 17: Three-phase measuring with a 3-wire connection and an ARON connection (MYeBOX 150, MYeBOX 1500, MYeBOX-1500-4G).

Note: See section "*3.8.10.- DETAIL OF THE CURRENT MEASUREMENT CONNECTION.*"

[6] See *"5.2.- DISPLAY MENU: DEVICE PROFILE"*

3.8.5.- TWO-PHASE NETWORK MEASURING WITH A 3-WIRE CONNECTION, MYeBOX 150.

Type of installation (Select circuit)[7]*: 2 Phases + Neutral.*

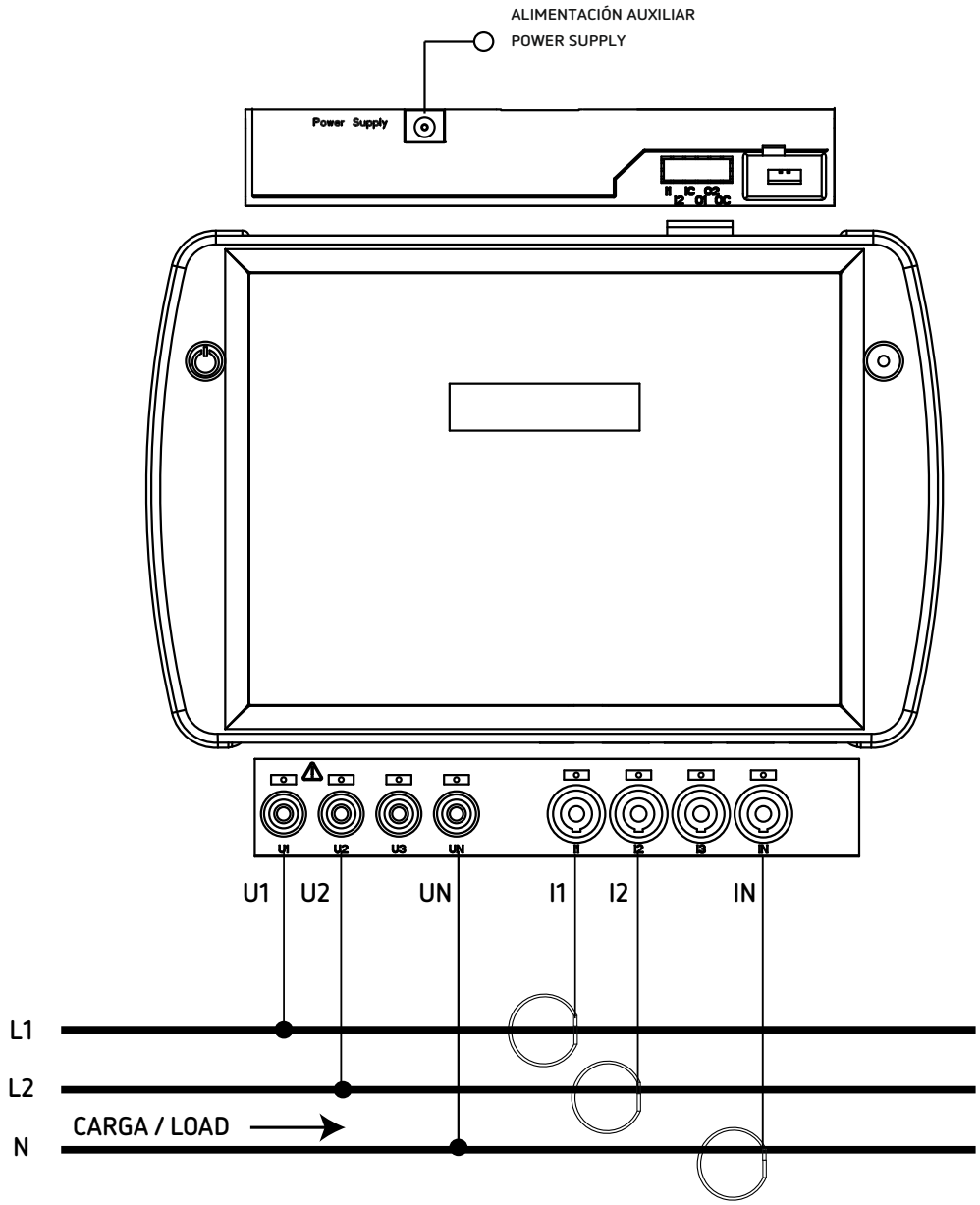

Figure 18: Two-phase measuring with a 3-wire connection (MYeBOX 150).

Note: See section "*3.8.10.- DETAIL OF THE CURRENT MEASUREMENT CONNECTION.*"

[7] See *"5.2.- DISPLAY MENU: DEVICE PROFILE"*

3.8.6.- TWO-PHASE NETWORK MEASURING WITH A 3-WIRE CONNECTION (MYeBOX 1500, MYeBOX-1500-4G).

Type of installation (Select circuit)[8]***:*** *2 Phases + Neutral.*

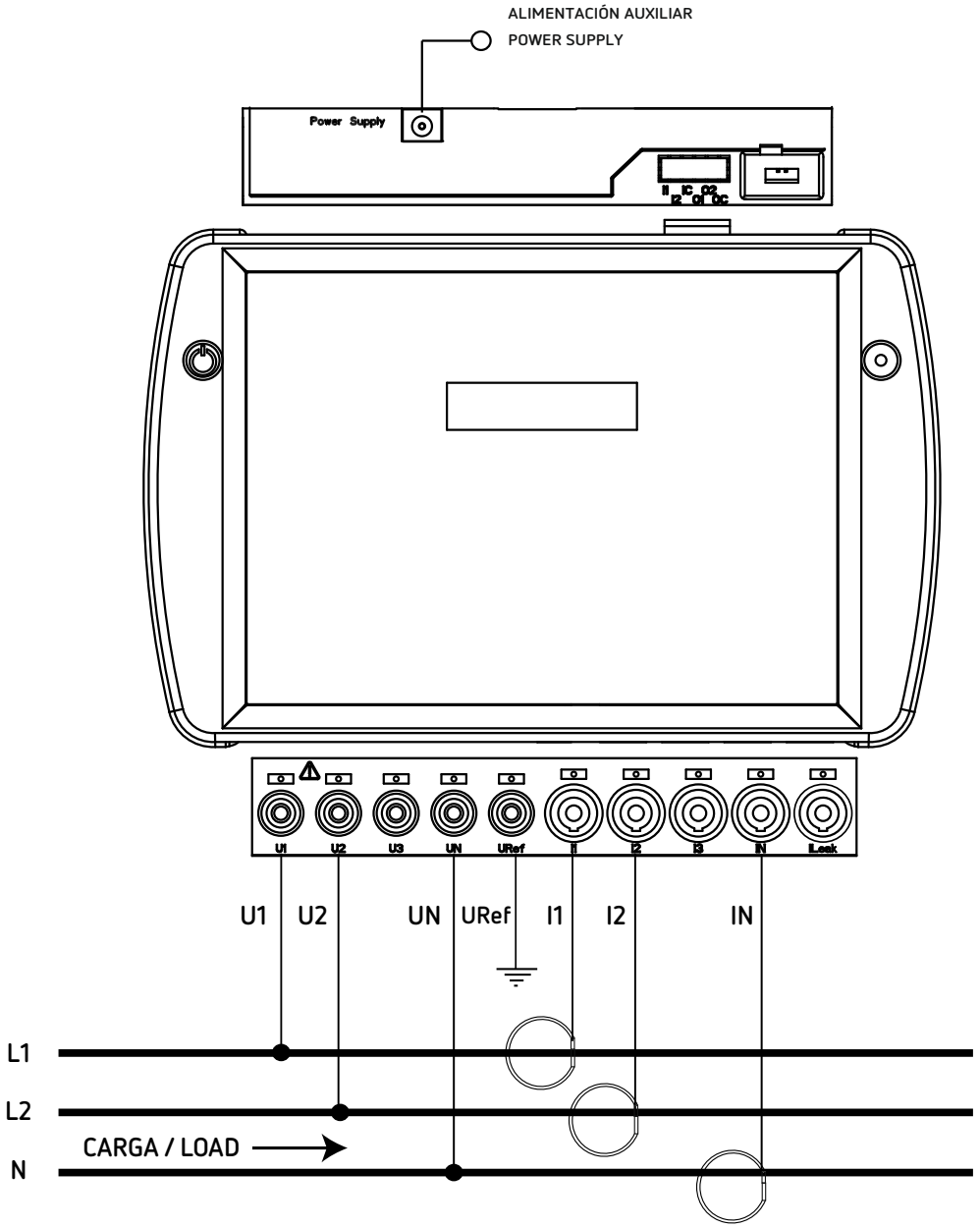

Figure 19: Two-phase measuring with a 3-wire connection (MYeBOX 1500, MYeBOX-1500-4G).

Note: See section "*3.8.10.- DETAIL OF THE CURRENT MEASUREMENT CONNECTION.*"

[8] See *"5.2.- DISPLAY MENU: DEVICE PROFILE"*

3.8.7.- SINGLE-PHASE NETWORK MEASUREMENT, PHASE TO PHASE, WITH A 2-WIRE CONNECTION (MYeBOX 150, MYeBOX 1500, MYeBOX-1500-4G)

Type of installation (Select circuit)[9]*:* *2 Phases.*

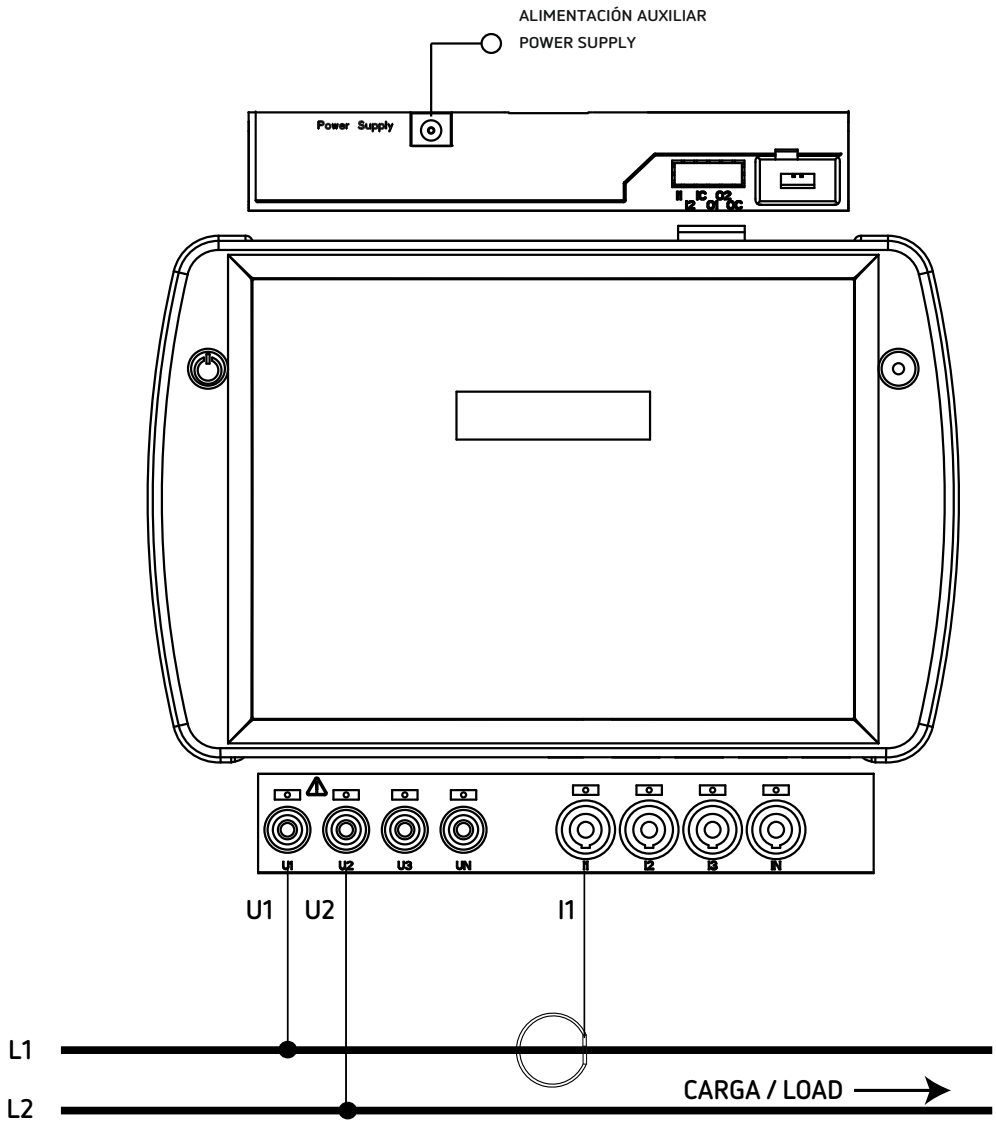

Figure 20: Single-phase measurement, phase to neutral, with a 2-wire connection (MYeBOX 150, MYeBOX 1500, MYeBOX-1500-4G).

Note: See section "*3.8.10.- DETAIL OF THE CURRENT MEASUREMENT CONNECTION.*"

[9] See *"5.2.- DISPLAY MENU: DEVICE PROFILE"*

3.8.8.- SINGLE-PHASE NETWORK MEASUREMENT, PHASE TO NEUTRAL, WITH A 2-WIRE CONNECTION (MYeBOX 150).

Type of installation (Select circuit)[10]***:*** *1 Phase + Neutral.*

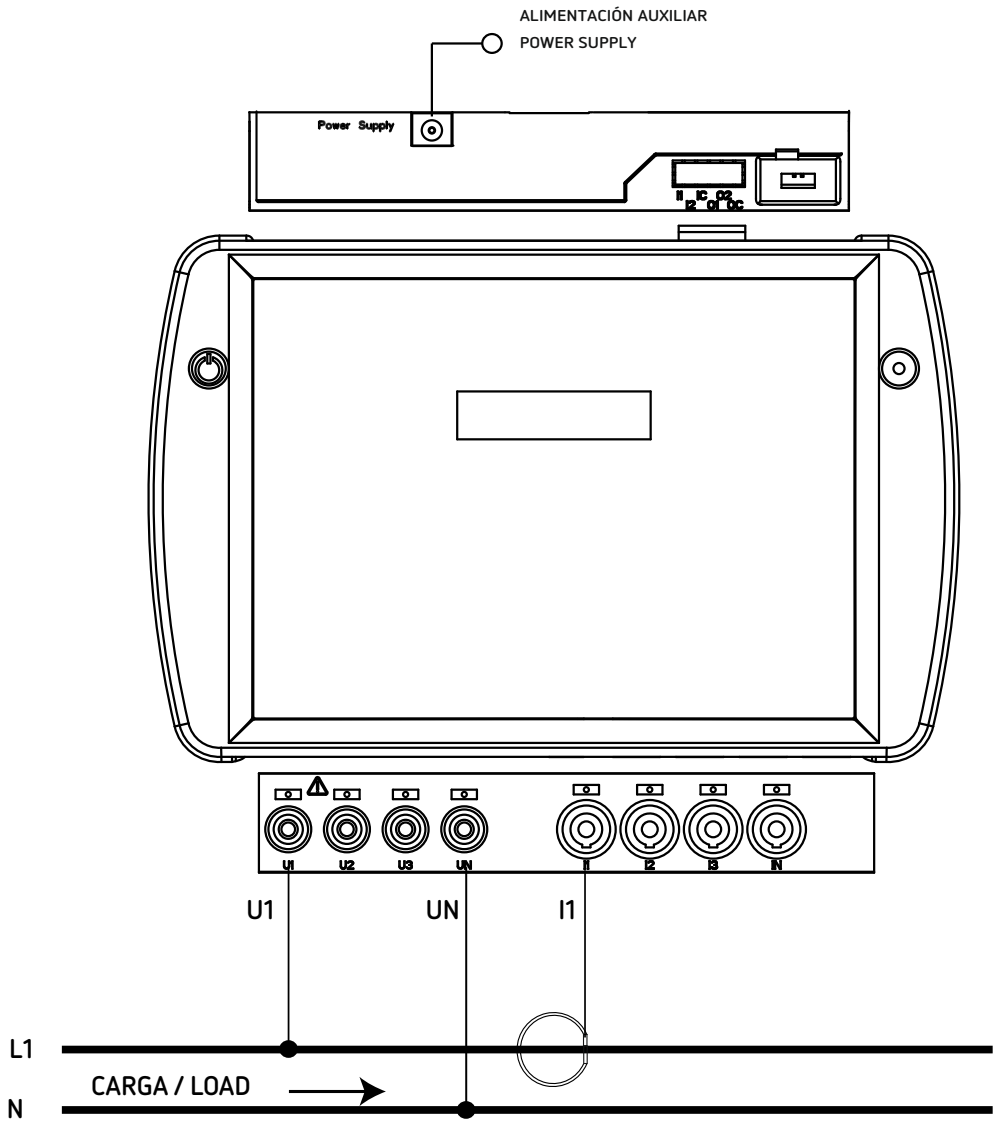

Figure 21: Single-phase measurement, phase to neutral, with a 2-wire connection (MYeBOX 150).

Note: See section "*3.8.10.- DETAIL OF THE CURRENT MEASUREMENT CONNECTION.*"

[10] See *"5.2.- DISPLAY MENU: DEVICE PROFILE"*

3.8.9.- SINGLE-PHASE NETWORK MEASUREMENT, PHASE TO NEUTRAL, WITH A 2-WIRE CONNECTION (MYeBOX 1500, MYeBOX-1500-4G).

Type of installation (Select circuit)[11]***:*** *1 Phase + Neutral.*

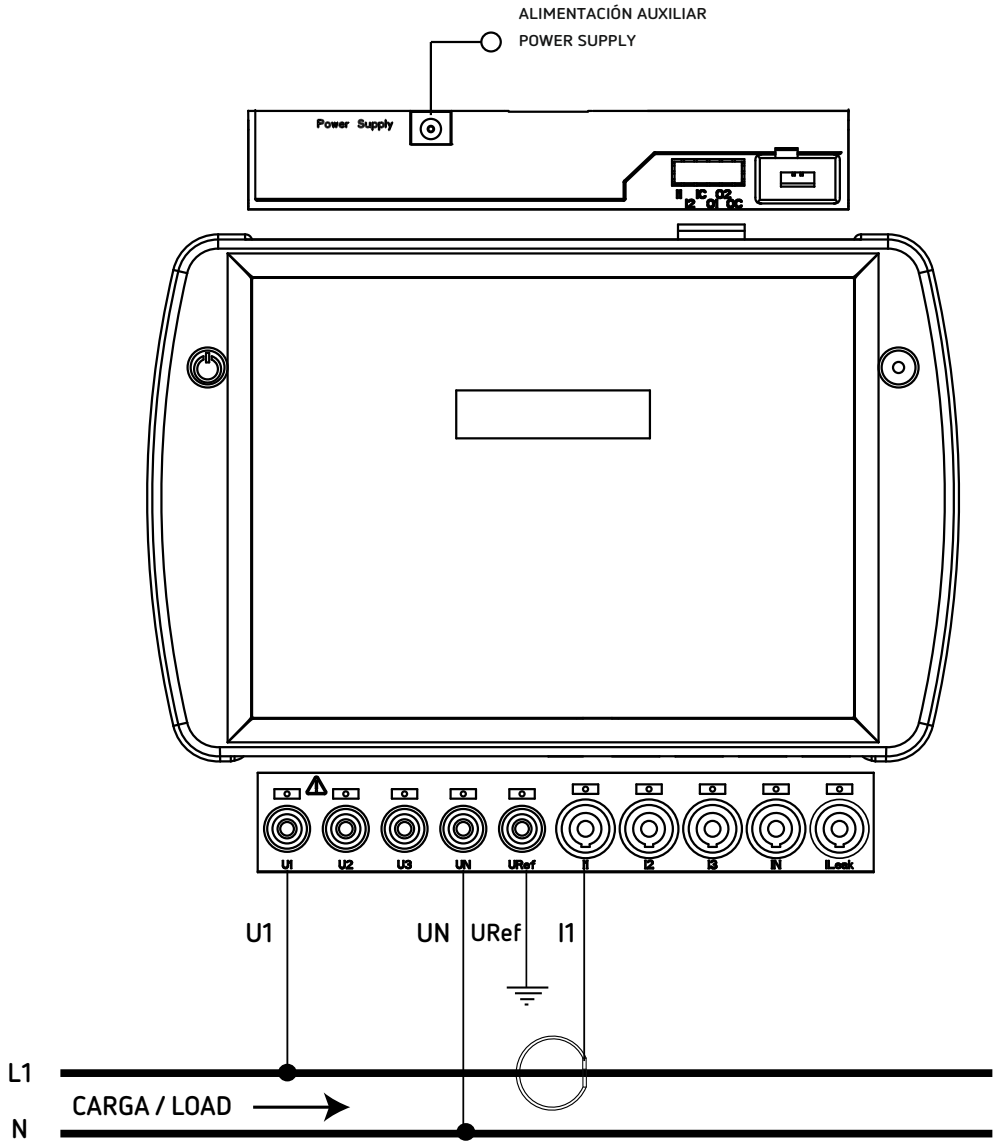

Figure 22: Single-phase measurement, phase to neutral, with a 2-wire connection (MYeBOX 1500, MYeBOX-1500-4G).

Note: See section "*3.8.10.- DETAIL OF THE CURRENT MEASUREMENT CONNECTION.*"

[11] See *"5.2.- DISPLAY MENU: DEVICE PROFILE"*

3.8.10.- DETAIL OF THE CURRENT MEASUREMENT CONNECTION.

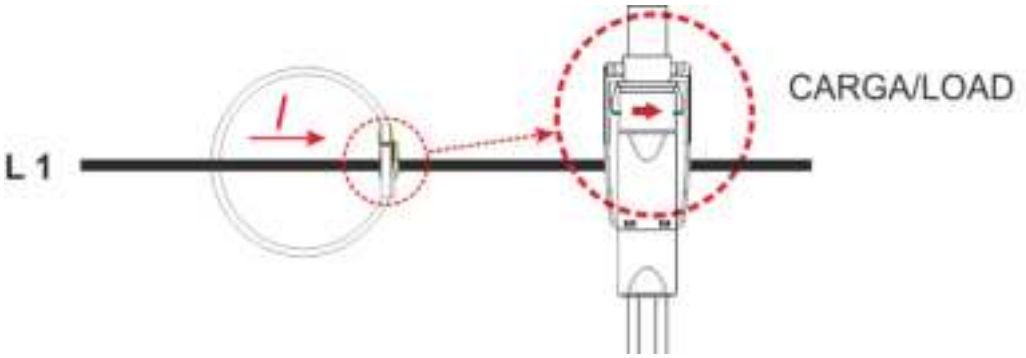

Figure 23: Detail of the current measurement connection.

3.8.11.- LEAKAGE CURRENT CONNECTION, ILeak. (MYeBOX 1500, MYeBOX-1500-4G MODELS)

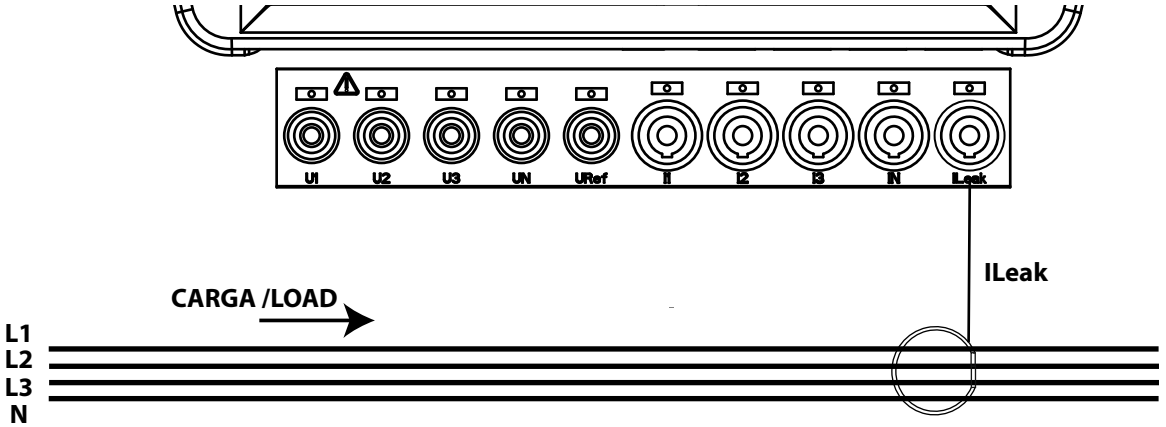

Figure 24: Connection of the leakage current, ILeak (MYeBOX 1500 , MYeBOX-1500-4G).

3.9.- REGISTERING AND UPDATING THE DEVICE

Before using the device for the first time, it is necessary to:

1.- Register the **MYeBOX** on the web page **www.myebox.es**
2.- Register the device on a network with Internet connection.
3.- Download the latest version of the mobile application **MYeBOX**, which can be found in the App Store and on Google Play.
4.- Connect to the device from the mobile application.
5.- Once the device is connected to the application, it is necessary to check whether there is a later version of the device's firmware. If there is a new firmware version, the application will display the message in **Figure 25**

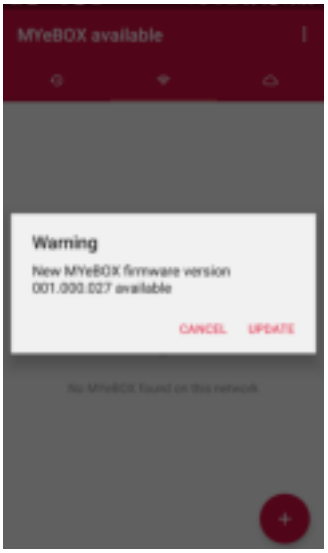

Figure 25: MyEBOX application screen indicating a new version.

To download and install the new version, go to **Setup**, select the option **Firmware** and press **START**. The device will download the package and start the update automatically.

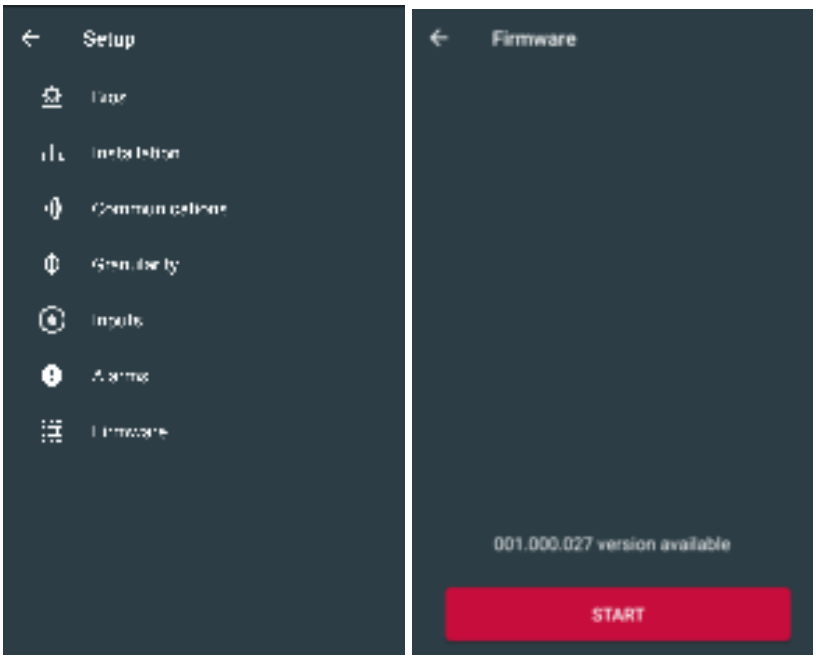

Figure 26: MYeBOX firmware update screen.

4.- OPERATION

4.1.- OPERATING PRINCIPLE

The **MYeBOX** is a four-quadrant portable power analyzer (consumption and generation).

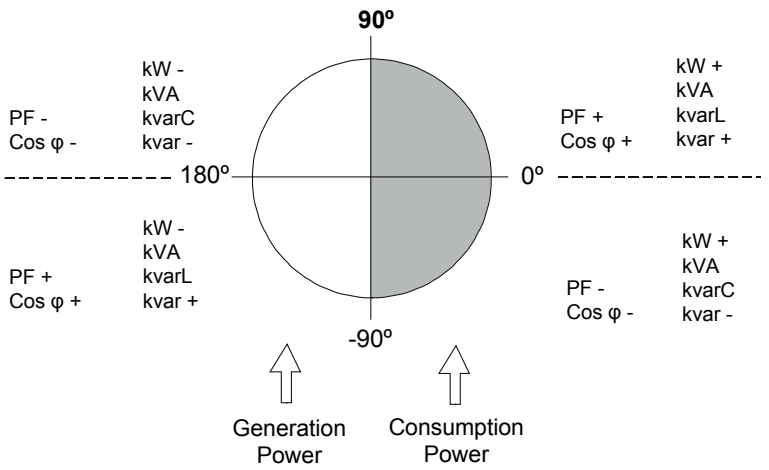

kW III = kW L1 + kW L2 + kW L3
kVA III = kVA L1 + kVA L2 + kVA L3
kvarL III = kvarL L1 + kvarL L2 + kvarL L3
kvarC III = kvarC L1 + kvarC L2 + kvarC L3
PF III = kW III / kVA III
Cos φ III = (Cos φ L1 + Cos φ L2 + Cos φ L3) / 3

Figure 27: Four quadrants of the MYeBOX.

In addition to the basic functions of any analyzer, the **MYeBOX**:

✓ Allows configuration and display of data:
- Remotely, via a tablet or smartphone, using a mobile application.
- Locally, via the display and the device's capacitive keypad.

✓It has a database for logging all the device's parameters and events.

✓It has MicroSD memory to store the **STD**, **EVA** and **EVQ** files of the database logs.

✓Comes standard with built-in Wi-Fi communications.

✓The **MYeBOX1500** models comes standard with built-in 3G (**MYeBOX 1500)** or 4G (**MYeBOX-1500-4G)** communications.

✓It has a lithium battery that guarantees the device's battery life, in order to log voltage drops in the installation and send the corresponding alarms.

4.2.- MEASUREMENT PARAMETERS

The device measures and logs different types of parameters:

✓ Electrical parameters,
✓ Quality parameters (**EVQ**) such as overvoltages, gaps and outages, in accordance with EN50160.
✓ Wave shapes of the different channels.
All the measurement parameters can be viewed on the **MYeBOX** mobile application, as shown in **Table 11**.

Note: *Application note* ***"M084E0201-03-xxx: Methods of measurement/Formulas"*** *describes the measurement formulas and methods used by the device.*

Table 11: MYeBOX measurement parameters.

Parameter	Units	Phases L1-L2-L3	N	Total III
Phase-neutral voltage (12)	Vph-N	✓	✓	✓
Phase-phase voltage (12)	Vph-ph	✓		✓
Current(12)	A	✓	✓	✓
Leakage current	A	✓		✓
Frequency(12)	Hz	✓(L1)		
Active power (12)	kW	✓		✓
Apparent power (12)	kVA	✓		✓
Inductive reactive power (12)	kvarL	✓		✓
Capacitive reactive power (12)	kvarC	✓		✓
Power factor (12)	PF	✓		✓
Crest factor	CF	✓		
K-factor	-	✓		
Cos φ (12)	φ	✓		✓
Voltage THD %	% THD V	✓	✓	
Current THD %	% THD A	✓	✓	
Harmonic Breakdown - Voltage(up to the 50th order harmonic)	harm V	✓	✓	
Harmonic Breakdown - Current (up to the 50th order harmonic)	harm A	✓	✓	
Instantaneous flicker	Pinst	✓	✓	
PST Flicker	Pst	✓	✓	
Active energy	kWh	✓		✓
Inductive Reactive Energy	kvarLh	✓		✓
Capacitive Reactive Energy	kvarCh	✓		✓
Apparent energy	kVAh	✓		✓
Voltage unbalance (12)	-			✓
Voltage asymmetry (12)	-			✓
Current unbalance	-			✓
Current asymmetry	-			✓
Maximum Current Demand	A	✓		✓
Maximum Demand for Active Power	kW			✓
Maximum Demand for Apparent Power	kVA			✓

Table 11 (Continued): MYeBOX measurement parameters.

Parameter	Units	Tariff: T1-T2		
Wave shapes	-	✓	✓	✓
Phasor representation	-	✓	✓	✓
No. of hours of active tariff [12]	hours	✓		
Cost [12]	COST	✓		
CO_2 Emissions [12]	$kgCO_2$	✓		

[12] Parameters shown on the device's display.

4.2.1.- QUALITY PARAMETERS

Power quality control requires defining the TRMS of the voltage level, subsequently used by the analyzer to record events. According to Standard EN-61000-4-30, the RMS value must be calculated for all the AC magnitudes or each cycle and refresh every ½ cycle. If the RMS value exceeds certain programmed thresholds, this is understood as an **event.**

The device detects quality parameters such as overvoltages, gaps, voltage outages and transients. **Figure 28** shows an example of these events.

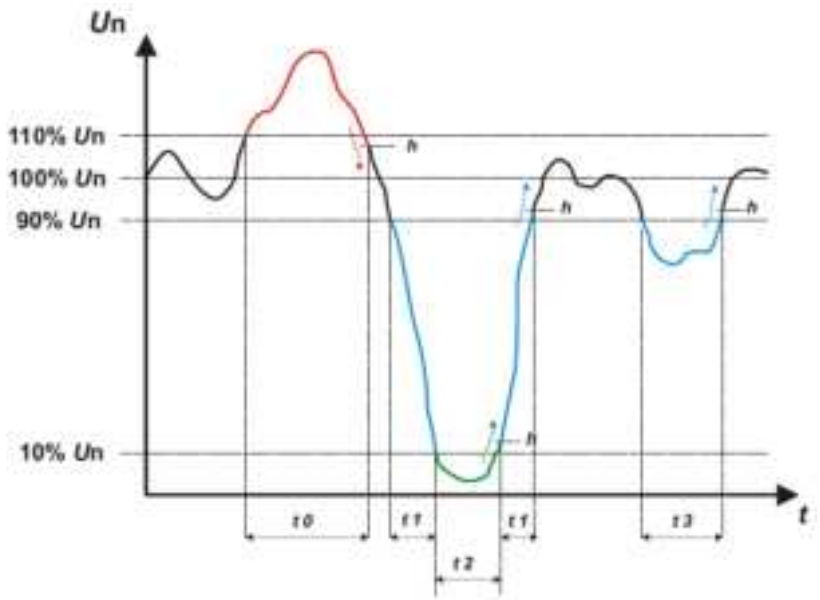

Figure 28:Example of quality events.

✓ **Overvoltage**

An overvoltage event is shown in the time interval **t0** in **Figure 28** . The duration of the event is the time that the signal stays above the configured threshold value (*"6.3.1.- OVERVOLTAGE, SWELL"*). In this example it is 110% of the rated voltage plus the time the signal takes to fall below the configured value, including a hysteresis of 2%.

✓ **Voltage gap**

In the time intervals **t1** and **t3** of **Figure 28** there are two voltage gaps. The duration of the event is the time that the signal stays below the configured threshold value (*"6.3.2.- GAP, SAG"*). In this example it is 90% of the rated voltage.

✓ **Voltage outage**

An outage or disruption event is shown in the time interval **t2** in **Figure 28** . The duration of the event is the time that the signal stays below the configured threshold value (*"6.3.3.- OUTAGE, DISRUPTION"*). In

this example it is 10% of the rated voltage plus the time the signal takes to rise above the configured value, including a hysteresis of 2%.

✓ **Transients**

Transients are detected by checking that the difference between one sample and the next does not exceed the maximum nominal slope value multiplied by the distortion level coefficient selected by the user (*"6.3.4.- TRANSIENTS, DISTURB"*).
In this case 128 samples are checked per cycle.

The maximum nominal slope value is the maximum tangent value calculated using a nominal value selected by the user. By definition, in a sine wave this maximum slope is given by the zero crossing, therefore the maximum slope is calculated as the value of the sine wave between sample point 0 (zero crossing) and point 1 (first sample).

Transients are checked and saved phase by phase. The 3 voltage phases are checked separately and when a transient is detected it saves the 15 wave shape cycles of the variable that caused it.

Example:

Figure 29 shows the disturbances detected when configuring a distortion coefficient of **5.0**

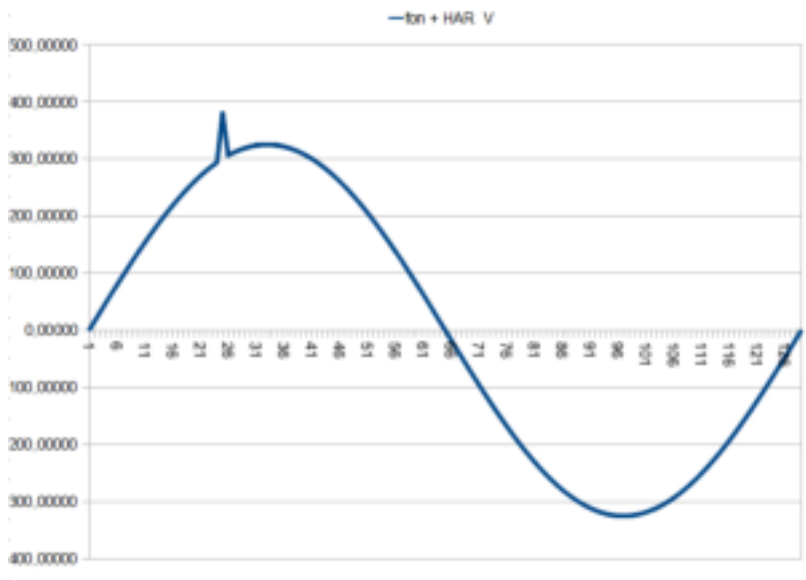

Figure 29: Transients detected with a distortion coefficient of 5.0.

Figure 30 shows the disturbances detected when configuring a distortion coefficient of **90.0**

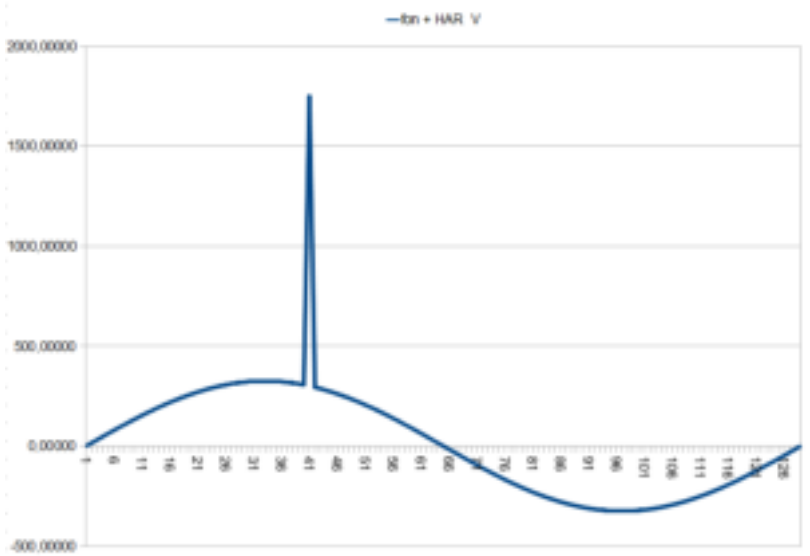

Figure 30:Transients detected with a distortion coefficient of 90.0.

4.3.- KEYPAD FUNCTIONS

The **MYeBOX** has 5 capacitive keys and 2 buttons:

Table 12: Button functions.

Button	Press
	Device on/off button.
	Data logging start/end button.

When the device's off button is pressed, the screen shown in **Figure 31** appears to confirm the shut-down.

POWER OFF
YES

Figure 31:Device shut-down screen (1).

Use the > and < keys to select whether or not to turn off the device. And press the ≡ key to confirm the option.
While the device is shutting down, the screen shown in **Figure 32 (2)** appears, and if the device is connected to a power supply it shows the battery charge status, as shown in **Figure 32 (3).**

TURNING OFF...

CHARGING BATTERY
97%

Figure 32:Device shut-down screens (2 and 3).

Table 13: Key functions: Display menus.

Key	Press
<	Go to the previous display screen.
>	Go to the next display screen.
≡	Access the display menu. Access the setup menu from the ***Setup menu***
∨	Go to the next display menu.
∧	Go to the previous display menu.

Table 14: Key functions: Setup menus.

Key	Press
<	Go to the previous configuration screen. Move the cursor one position to the left in edit mode.
>	Go to the next display screen. Move the cursor one position to the right in edit mode.
≡	Enter edit mode. Confirm the selected option.
∨	Go to the next menu option. Decrease the value of the field in the programming menu.
∧	Go to the previous menu option. Increase the value of the field in the programming menu.

If the device is not active for 5 minutes, the backlight will turn on when you press any key or button.

4.4.- DISPLAY

The device has a 2-line display with 20 digits on each line, for viewing all the parameters indicated in **Table 11** and for configuring the device.

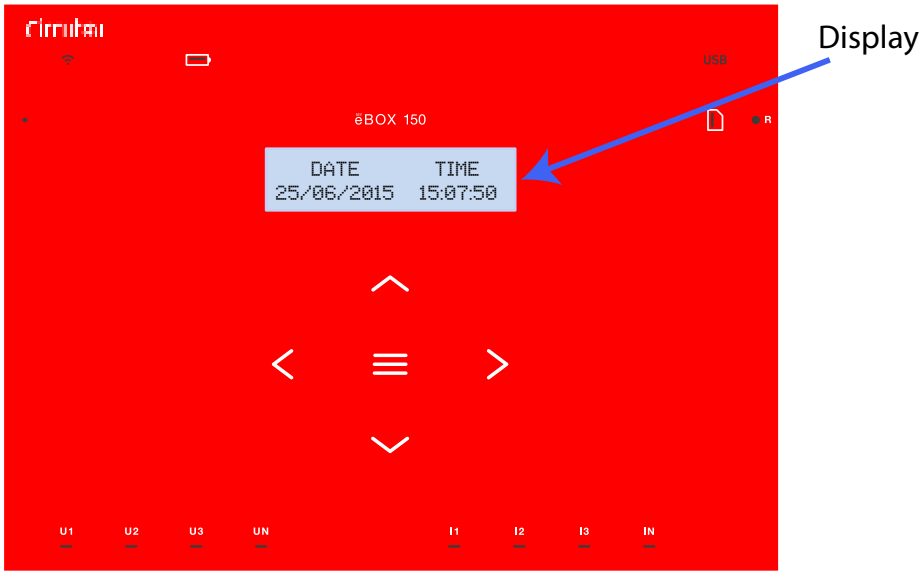

Figure 33: MYeBOX display

4.5.- LED INDICATORS

4.5.1.- MYeBOX 150.

The **MYeBOX 150** model has 14 indicator LEDs, as shown in **Figure 34** and **Table 15**.

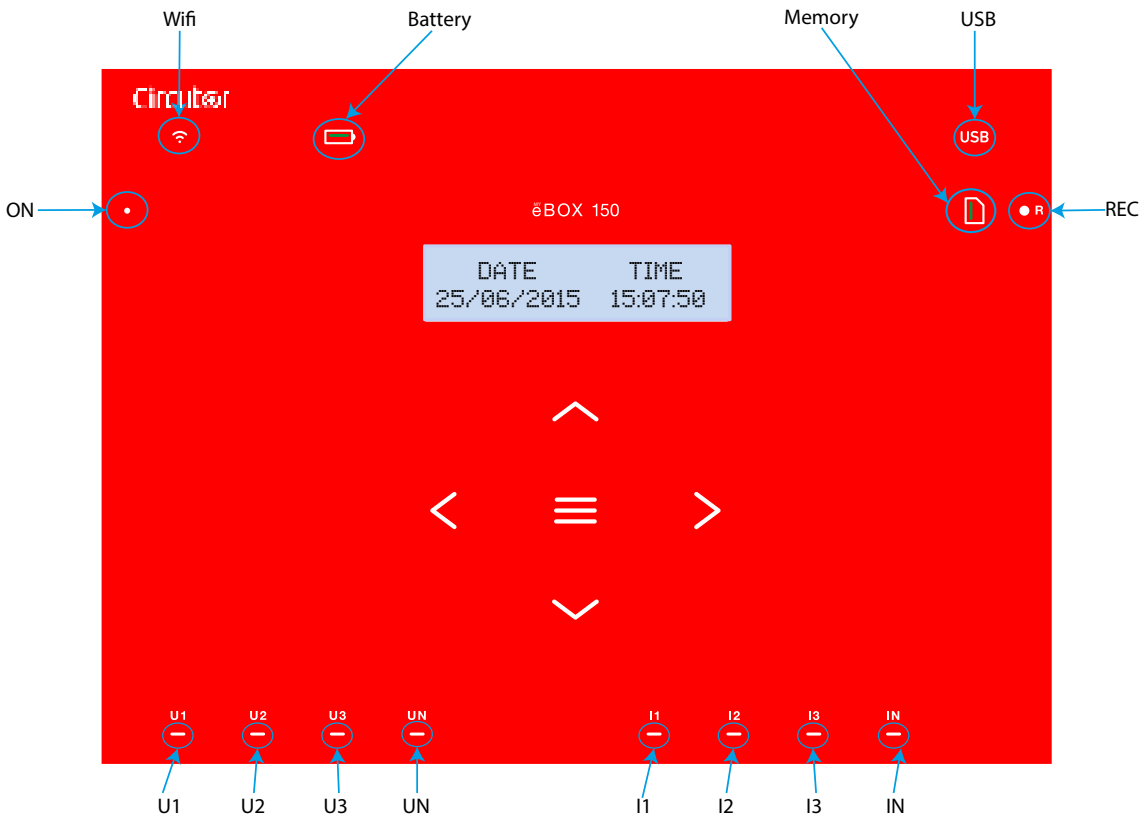

Figure 34:MYeBOX 150 indicator LEDs.

Table 15: LED description, MYeBOX 150.

LED	Description
ON	**Power off**
	Device off.
	Blinking light (1 s)
	Device on.
Wi-Fi	**Power off**
	Wi-Fi connection disabled.
	Power on
	Wi-Fi connection enabled.
	Blinking light (1 s)
	Wi-Fi traffic.
Battery	**Power on**
	Green: Battery charge between 70 ... 100 %. ***Yellow:*** Battery charge between 30 ... 70 %. ***Red:*** Battery charge between 5 ... 30 %.
	Blinking light (1 s)
	Green: Battery not charging, charge between 70 ... 100 %. ***Yellow:*** Battery not charging, charge between 30 ... 70 %. ***Red:*** Battery not charging, charge between 5 ... 30 %.

Table 15 (Continued): LED description, MYeBOX 150.

LED	Description
Battery	**Blinking light (0.5 s)**
	Red: Battery not charging, charge < 5%.
USB	**Power off**
	No access to the MicroSD memory; the USB cable does not have to be connected.
	Power on
	Access to the MicroSD memory is allowed; the USB cable can be connected to access the memory.
	Blinking light (1 s)
	Data traffic.
Memory	**Power on**
	Green: Space available in the memory: 55 ... 100 %. ***Yellow:*** Space available in the memory: 25 ... 55 %. ***Red:*** Space available in the memory: 10 ... 25 %.
	Blinking light (0.5 s)
	Red: Space available in the memory: < 10%.
REC	**Power off**
	Data not being logged.
	Power on
	Device logging data.
	Blinking light (1 s)
	Log error or MicroSD memory access error.
U1 U2 U3 UN	**Power off**
	No voltage at the corresponding input. (U1: L1, U2: L2, U3: L3, UN: LN)
	Power on
	Voltage at the corresponding input. (U1: L1, U2: L2, U3: L3, UN: LN)
	Blinking lights U1, U2 and U3 (1 s)
	L1-L2-L3 phase sequence error
I1 I2 I3 IN	**Power off**
	Clamp not connected (I1: L1, I2: L2, I3: L3, IN: LN)
	Power on
	Clamp connected (I1: L1, I2: L2, I3: L3, IN: LN)
	Blinking light (1 s)
	Negative power or **cos** < ± 0.6
IN	**Power off**
	Clamp not connected (LN)
	Power on
	Clamp connected (LN)

4.5.2.- MYeBOX 1500 / MYeBOX-1500-4G.

The **MYeBOX 1500 / MYeBOX-1500-4G** model has 21 indicator LEDs, as shown in **Figure 35** and **Table 16**.

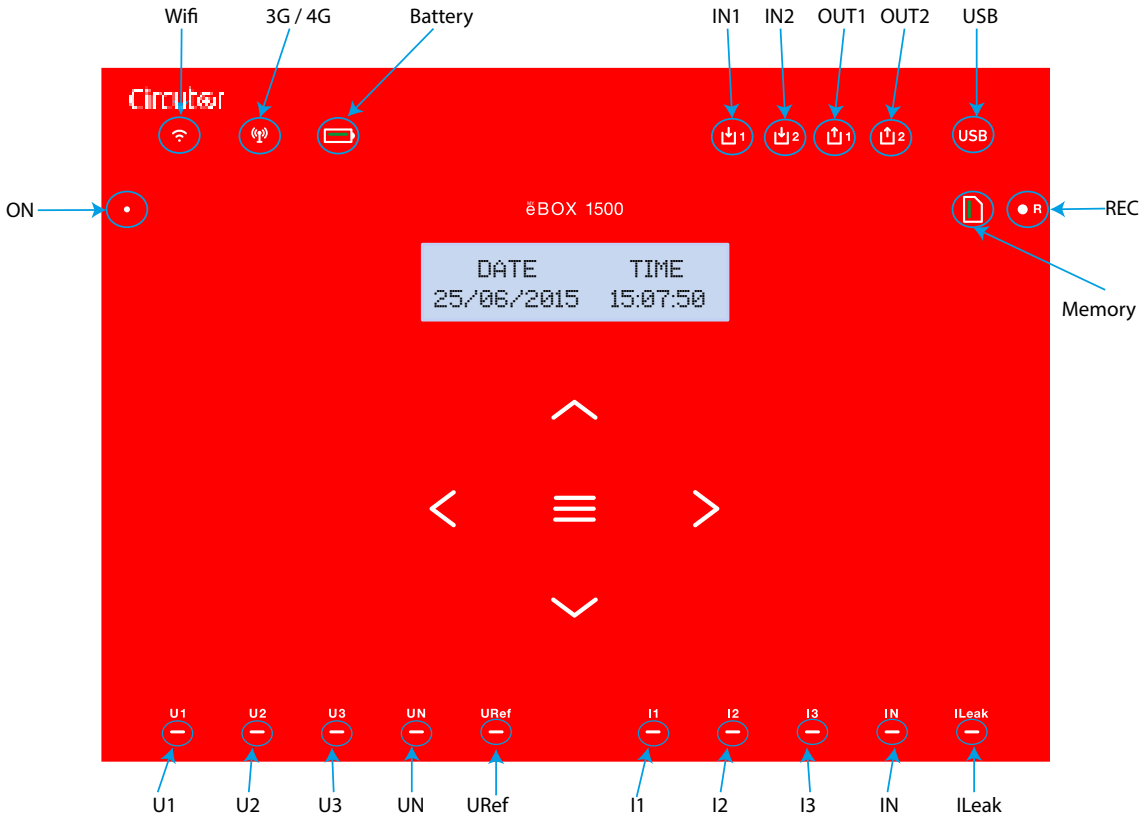

Figure 35:MYeBOX 1500 / MYeBOX-1500-4G indicator LEDs.

Table 16: LED description, MYeBOX 1500 / MYeBOX-1500-4G.

LED	Description
ON	**Power off**
	Device off.
	Blinking light (1 s)
	Device on.
Wi-Fi	**Power off**
	Wi-Fi connection disabled.
	Power on
	Wi-Fi connection enabled.
	Blinking light (1 s)
	Wi-Fi traffic.
3G / 4G (13)	**Power off**
	3G/4G connection disabled.
	Power on
	3G/4G connection enabled.
	Blinking light (1 s)
	3G/4G traffic.
Battery	**Power on**
	Green: Battery charge between 70 ... 100 %. ***Yellow:*** Battery charge between 30 ... 70 %. ***Red:*** Battery charge between 5 ... 30 %.

Table 16 (Continued): LED description, MYeBOX 1500 / MYeBOX-1500-4G.

LED	Description
Battery	**Blinking light (1 s)**
	Green: Battery not charging, charge between 70 ... 100 %. ***Yellow:*** Battery not charging, charge between 30 ... 70 %. ***Red:*** Battery not charging, charge between 5 ... 30 %.
	Blinking light (0.5 s)
	Red: Battery not charging, charge < 5%.
IN1 IN2	**Power off**
	Digital input inactive
	Power on
	Digital input active
OUT1 OUT2	**Power off**
	Transistor output inactive
	Power on
	Transistor output active
USB	**Power off**
	No access to the MicroSD memory; the USB cable does not have to be connected.
	Power on
	Access to the MicroSD memory is allowed; the USB cable can be connected to access the memory.
	Blinking light (1 s)
	Data traffic.
Memory	**Power on**
	Green: Space available in the memory: 55 ... 100 %. ***Yellow:*** Space available in the memory: 25 ... 55 %. ***Red:*** Space available in the memory: 10 ... 25 %.
	Blinking light (0.5 s)
	Red: Space available in the memory: < 10%.
REC	**Power off**
	Data not being logged.
	Power on
	Device logging data.
	Blinking light (1 s)
	Log error or MicroSD memory access error.
U1 U2 U3 UN URef	**Power off**
	No voltage at the corresponding input. (U1: L1, U2: L2, U3: L3, UN: LN, URef: Reference voltage)
	Power on
	Voltage at the corresponding input. (U1: L1, U2: L2, U3: L3, UN: LN, URef: Reference voltage)
	Blinking lights U1, U2 and U3 (1 s)
	L1-L2-L3 phase sequence error

Table 16 (Continued): LED description, MYeBOX 1500 / MYeBOX-1500-4G.

LED	Description
I1 I2 I3	**Power off**
	Clamp not connected (I1: L1, I2: L2, I3: L3)
	Power on
	Clamp connected (I1: L1, I2: L2, I3: L3)
	Blinking lights (1 s)
	Negative power or **cos** < ± 0.6
IN ILeak	**Power off**
	Clamp not connected (IN: LN, ILeak: Leakage current)
	Power on
	Clamp connected (IN: LN, ILeak: Leakage current)

(13) 3G (**MYeBOX 1500** model) and 4G (**MYeBOX-1500-4G** model).

4.6.- INPUTS (MYeBOX 1500 / MYeBOX-1500-4G model)

The **MYeBOX 1500 / MYeBOX-1500-4G** has two digital inputs (terminals 12, 13 and 14 in **Table 10**) that can be programmed through the mobile application.

Note: *The digital inputs must be connected to SELV (Safety Extra Low Voltage).*

4.7.- OUTPUTS (MYeBOX 1500 / MYeBOX-1500-4G model)

The device has two transistor digital outputs (terminals 15, 16 and 17 of **Table 10**) that can be programmed through the mobile application to function as alarms.

4.8.- DATA LOGGING

4.8.1. DATABASE

The **MYeBOX** has a database that logs all the device's parameters and events.

To begin logging data, push the button. When the button is pushed, the screen shown in **Figure 36** appears to confirm the beginning of recording.

Figure 36:Recording confirmation screen.

Use the and keys to select whether or not the device should record. And press the key to confirm the option.

Press the button again to end logging.

The **REC** LED will be lit while data is being logged. (***"4.5.- LED INDICATORS"***)

The name of the log where all the measurements will be saved is configured in the **Device profile setup** menu (*"6.2.2.- MEASUREMENT NAME"*).
The device adds the configured name to the recording date so that the same name can be used for more than one log.

Note: *The energy parameters saved in the database log are reset every time a new data log is started.*

Note: *If the device resets the accumulated energy parameters while logging data, they will not be lost.*

Note: *Setup menu changes must be made while data logging is off.*

Note: *The data recording process cannot be started or ended from the setup menu; the* *button is disabled.*

All logs can be accessed through the **MYeBOX** mobile application.

4.8.2. MicroSD MEMORY

The device comes with MicroSD memory factory-installed for data logging.

Table 17: Features of the MicroSD memory.

MicroSD Memory	
Format	FAT32
Capacity	16 Gb

The device only recognises cards in FAT32 format. If a MicroSD memory card in another format is used, the device will not be able to write to it and a write error will be indicated by the **REC** LED blinking.
We recommend not using cards that have information you wish to keep, and backing up the information frequently for security purposes.

A ZIP file containing three file types is saved to the MicroSD memory:

- ✓A ***.EVA** file containing all the device's events since the last time the database was deleted.
- ✓A ***.EVQ** file containing all the quality parameters of the most recent log.
- ✓Six ***.STD** files containing all the measurement parameters of the most recent log.

The files can be downloaded using the µUSB connector or can be sent to **MYeBOX Cloud** in the cloud.

4.8.2.1. EVA file

All events performed by the device are recorded in the **.EVA** file, with the date and time when they occurred.
The **MYeBOX** can detect and record the following incidents:

Table 18:.EVA file description.

EVENT	DESCRIPTION
BAT_ON	Battery powered device.
BAT_OFF	Battery level that causes the device to switch off
CLEAR_ENERGY	Energy loss (boot)
SETUP_LOST	Setup loss (defect)
SETUP_CHANGED	Change of a configuration parameter
SETUP_TRANS_RATIO_CHANGED	Change of transformation ratio configurations.
SETUP_TIME_CHANGED	Change of date and time configuration.
SETUP_ALARM_CHANGED	Change of an alarm parameter configuration.
SETUP_GAIN	Loss of measurement adjustment parameters (defect)
FORMAT_SD	Formatting of MicroSD memory
DELETE_STD_FILE	Deleting STD files due to erasing a measurement
DELETE_EVQ_FILE	Deleting EVQ files due to erasing a measurement
POWER_ON	Device switched on
POWER_OFF	Device switched off
INPUT_1_ON	Status of input 1 is ON
INPUT_2_ON	Status of input 2 is ON
INPUT_1_OFF	Status of input 1 is OFF
INPUT_2_OFF	Status of input 2 is OFF
OUTPUT_1_ON	Status of output 1 is ON
OUTPUT_2_ON	Status of output 2 is ON
OUTPUT_1_OFF	Status of output 1 is OFF
OUTPUT_2_OFF	Status of output 2 is OFF
DATA_CHANGED_BEFORE	Date change (prior)
DATA_CHANGED_AFTER	Date change (new)
SD_SATATUS_OK	MicroSD status is correct
SD_STATUS_OUT	MicroSD not detected
SD_STATUS_ERROR	Error accessing the MicroSD
MYeBOX_UPGRADE	Firmware update
REC_STOP	Stop manual logging (button or App)
REC_START	Start manual logging (button or App)
EVQ_STOP	Automatic or manual disabling of events or transients
EVQ_START	Automatic or manual enabling of events or transients
ALARM_1_ON	Alarm 1 activated
ALARM_2_ON	Alarm 2 activated
ALARM_3_ON	Alarm 3 activated
ALARM_4_ON	Alarm 4 activated
ALARM_1_OFF	Alarm 1 disabled
ALARM_2_OFF	Alarm 2 disabled
ALARM_3_OFF	Alarm 3 disabled
ALARM_4_OFF	Alarm 4 disabled

4.8.2.2. .EVQ file

All quality events are stored in the **.EVQ** file. The following data are stored from each one of the events:

Table 19: Quality event.

DATA	DESCRIPTION
Event Type	Overvoltage, Gap, Interruption or Transient[14].
Event Date	Date the event occurred. This value is obtained with a precision of 1 cycle.
Duration of the Event	Duration of the event in milliseconds.
Maximum/minimum voltage of the Event	When an interruption or gap is produced, the minimum RM[15] voltage value obtained during the event will be stored. The maximum value will be stored in the event of an overvoltage.
Mean voltage of the event	Mean RMS[15] voltage value obtained during the duration of the recorded event.
Voltage prior to the event	The RMS[15] voltage value just before the event was produced will be stored.
Wave shape from 15 cycles of the event	The unit stores a record of 5 cycles before it starts event detection; once the event is detected, it continues to record another 10 cycles after the event so it is perfectly delimited and its complete enclosure can be shown, thereby improving its analysis.

[14] For **Transient** type events, only the following data is stored: **Wave shape from 15 cycles of the event**.
[15] See "*4.2.1.-* QUALITY PARAMETERS"

4.8.2.3. .STD file

The standard (.**STD**) file is used to store all the parameters that have to be recorded periodically, within a programmed period of time.
Table 20 shows the variables that can be included in an **STD** file.

Table 20: List of variables that can be included in the STD file

Variables	Unit	Phases L1-L2-L3	N	Total III	Record Period [16]
Phase-neutral voltage (effective, maximum, minimum)	Vph-N	✓	✓	✓	5 min
Phase-phase voltage (effective, maximum, minimum)	Vph-ph	✓		✓	5 min
Current (average, maximum, minimum)	A	✓	✓	✓	5 min
Leakage current (average, maximum, minimum)	A	✓		✓	5 min
Frequency (average, maximum, minimum)	Hz	✓(L1)			5 min
Active power (average, maximum, minimum)	kW	✓		✓	5 min
Apparent power (average, maximum, minimum)	kVA	✓		✓	5 min
Inductive reactive power (average, maximum, minimum)	kvarL	✓		✓	5 min
Capacitive reactive power (average, maximum, minimum)	kvarC	✓		✓	5 min
Power factor (average, maximum, minimum)	PF	✓		✓	5 min
Crest factor (voltage and current)	CF	✓			5 min
K-factor	-	✓			5 min
THD % voltage (average, maximum, minimum)	% THD V	✓	✓		5 min

Table 20 (Continued) : List of variables that can be included in the STD file

Variables	Unit	Phases L1-L2-L3	N	Total III	Record Period [16]
THD % current (average, maximum, minimum)	% THD A	✓	✓		5 min
Voltage harmonics (up to 50th order)	harm V	✓	✓		5 min
Current harmonics (up to 50th order)	harm A	✓	✓		5 min
Instant Flicker	Pinst	✓	✓		5 min
PST Flicker	Pst	✓	✓		10 min
Active energy	kWh	✓		✓	5 min
Inductive reactive energy	kvarLh	✓		✓	5 min
Capacitive active energy	kvarCh	✓		✓	5 min
Voltage unbalance	-			✓	5 min
Voltage asymmetry	-			✓	5 min
Homopolar voltage	-			✓	5 min
Direct voltage	-			✓	5 min
Inverse voltage	-			✓	5 min
Current unbalance	-			✓	5 min
Current asymmetry	-			✓	5 min
Current homopolar	-			✓	5 min
Direct current	-			✓	5 min
Inverse current	-			✓	5 min
Current maximum demand	A	✓		✓	15 min
Active power maximum demand	kW			✓	15 min
Aparent power maximum demand	kVA			✓	15 min
Variables	**Unit**	**Tariff T1 - T2**			**Record Period [16]**
Cost	COST	✓			5 min
CO_2 Emissions	$kgCO_2$	✓			5 min

[16] Default recording period.

The variable recording period can be configured by the user.

Note: *Only 32 variables can be saved at once with a recording period of 1 second. For example:*

Table 21:Example of saving 32 variables with a recording period of 1 second.

Variables	*L1*	*L2*	*L3*	*Total III*
Phase-neutral voltage	*1*	*1*	*1*	*1*
Phase-phase voltage	*1*	*1*	*1*	*1*
Current	*1*	*1*	*1*	*1*
Active power	*1*	*1*	*1*	*1*
Inductive and Capacitive reactive power	*2*	*2*	*2*	*2*
Power factor	*1*	*1*	*1*	*1*
Frequency	*1*			
Flicker	*1*	*1*	*1*	
Total off variables	***32***			

Some of the variables in the **STD** file require an explanation:

✓ **Instant Flicker and PST Flicker:**

The device will record the instant Flicker and the value obtained during the recording period (**Flicker PST**). The **PLT** value is calculated by the Mobil applications.

✓ **Harmonics:**

MYeBOX measures and records the average individual harmonic distortion up to the 50th harmonic, and the voltage and current THD value up to the 40th harmonic. Each record corresponds to a block of 10 cycles, within the recording period.

✓ **Unbalance:**

The device calculates the coefficients for asymmetry and unbalance in the voltages and currents of the three-phase system.

Asymmetry coefficient, Ka: ratio between the homopolar and direct components in an unbalanced system.

$$K_a\,\% = \frac{|U_0|}{|U_d|}\,100$$

Equation 1: Asymmetry coefficient.

Unbalance coefficient, Kd: ratio between the inverse and direct components in an unbalanced system

$$K_d\,\% = \frac{|U_i|}{|U_d|}\,100$$

Equation 2:Unbalance coefficient.

✓ **K-factor, Transformer power reduction factor :**

The device calculates the **K-factor** according to **IEEE C57.110**. The **K-factor** is a factor that is used to calculate transformer power reduction.

$$K - factor = \sum_{h=1}^{\infty}\left[\frac{I_h}{I_R}\right]^2 h^2 = \frac{1}{I_R^2}\sum_{h=1}^{\infty} I_h^2\, h^2$$

Equation 3: K-factor .

Where:

$\mathbf{I_R}$, denotes nominal rms load current of the transformer,

h, denotes harmonic order.

✓ **Crest Factor**

The crest factor is the ratio between the peak value and the RMS value of a voltage or a periodic cur-

rent. The purpose of the crest factor is to give an idea of the wave peak and it is used primarily for current waves.

$$CF = \frac{|U_{pico}|}{|U_{RMS}|} 100$$

Equation 4: Crest Factor

In a perfect sinusoidal wave, the peak is √2 times greater than the RMS value; therefore the crest factor is **1.41**. For waves with very high peaks, the crest factor will be over **1.41**

4.8.2.4.- Removing the MicroSD memory card.

To avoid electric shocks, disconnect the measuring and power supply terminals before opening the cover.
Do not use the device without the cover in place.

The MicroSD memory card is located under the battery. To remove it, follow the steps indicated in section ***"3.2.- BATTERY INSTALLATION"***.

The position of the MicroSD memory card is shown in **Figure 37**.

Figure 37: Location of the MicroSD memory card.

In the same slot where the MicroSD memory card is inserted there is another memory card for internal use of the unit.
Do not remove or tamper with the memory card for internal use, as this may cause loss of data and malfunction of the unit.

5.- DISPLAY

The parameters shown by the device on the screen are organised into different display menus, as shown in **Figure 38**.

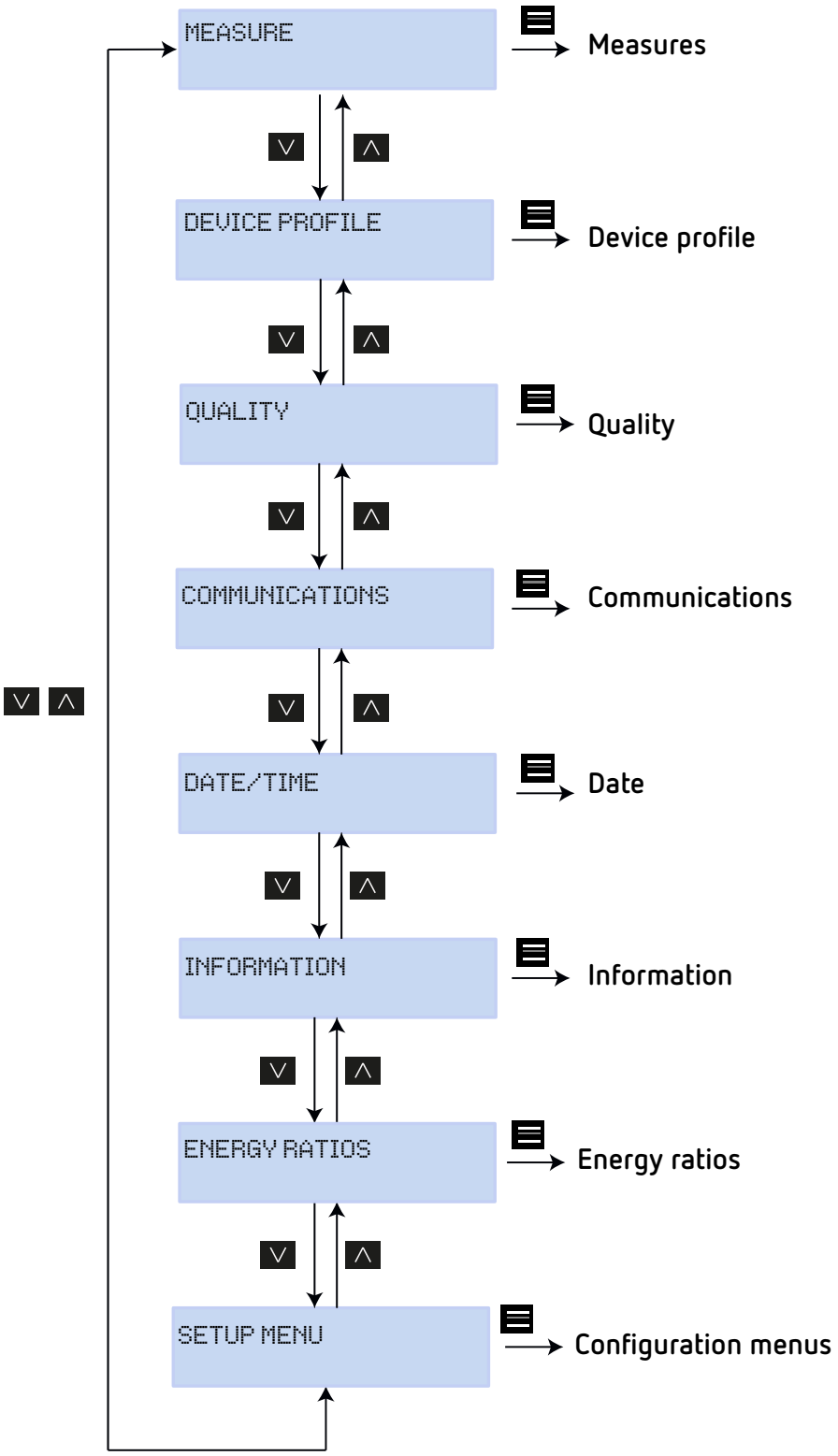

Figure 38:MYeBOX display menu.

Once the device has finished booting up, the display shows the first screen of the **Measure** display menu, as shown in **Figure 39**.

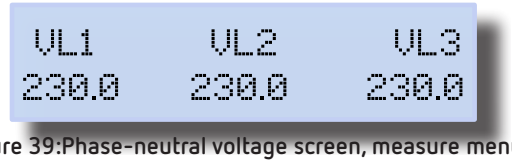

Figure 39:Phase-neutral voltage screen, measure menu.

If the device detects a system error, the error screen appears as shown in **Figure 40**, indicating the error code. This screen disappears by pressing any key or button on the device.
"Table 28: Error code." shows every possible error code of the device.

Figure 40: Error code screen.

When any phase-neutral voltage exceeds 600 V the following screen appears:

Figure 41:Overvoltage screen.

This screen does not disappear until the voltage falls below 600 V (phase-neutral).

5.1.- DISPLAY MENU: MEASURE

Figure 42 shows the main screen of the **Measure** display menu, showing all the device's measuring parameters.

```
MEASURE
```

Figure 42:Measure display menu, main screen.

Press the key to enter the display menu.
Use the and keys to toggle between the different screens.

Table 22: Measure display menu.

Measure display menu
VL1 VL2 VL3 230.0 230.0 230.0 **Phase - Neutral Voltages,** VL1, VL2 and VL2
VL12 VL23 VL31 398.0 400.0 401.3 **Phase - Phase Voltages,** VL12, VL23 and VL31
A1 A2 A3 5.00 5.00 5.00 **Phase currents,** A1, A2 and A3.
kW1 kW2 kW3 11500 11575 11600 **Active Power,** of each of the phases. (17)
kvrL1 kvrL2 kvrL3 11500 11575 11600 **Inductive Reactive Power,** of each of the phases. (17)
kvrC1 kvrC2 kvrC3 11500 11575 11600 **Capacitive Reactive Power,** of each of the phases. (17)
kVA1 kVA2 kVA3 11500 11575 11600 **Apparent Power,** of each of the phases. (17)

Table 22 (Continued): Measure display menu.

Measure display menu
COS1 COS2 COS3 -0.80 -1.00 -0.50 **Cos φ,** of each of the phases.[17]
COS III PF III 1.00 -0.95 **Cos φ III and Power Factor III** [17]
kvrC III kvrL III 34500 34500 **Three-phase Capacitive Reactive Power and three-phase Inductive Reactive Power.** [17]
kW III kVA III 34500 33450 **Three-phase Active Power and three-phase Apparent Power.** [17]
FREQ kWh III 50.00 00999999.999 **Three-phase frequency and energy.**
V Kd V Ka 2.340 0.653 **Voltage unbalance coefficient (Kd) and voltage asymmetry coefficient (Ka).**
INPUT1 INPUT2 25.349 28.218 **Digital inputs** If they have been configured as Status, it shows whether the input is connected (1) or disconnected (0). If they have been configured as Meter the meter's totaliser multiplied by the selected metering factor is displayed.
MAIN MENU Press the key to quit the display menu.

[17] Only consumed values are shown on the display.

5.2.- DISPLAY MENU: DEVICE PROFILE

Figure 43 shows the main screen of the **Device Profile** display menu, showing all the device's profile.

Figure 43:Device Profile display menu, main screen.

Press the key to enter the display menu.
Use the and keys to toggle between the different screens.

Table 23: Device Profile display menu.

Device Profile display menu
DEVICE NAME MYeBOXService **Name of the device,** defined in the setup menu.
MEASURE NAME MEASURE_DEFAULT **Name of the database's current log**
CIRCUIT SELECTED 3 PHASES + NEUTRAL **Type of installation,** configured on the device.
VL2 VL3 VL1 -I1 I2 I3 **Connection configuration** for the current and voltage phases.[18]
MAIN MENU Press the key to quit the display menu.

[18] May only be configured in the mobile application.

5.3.- DISPLAY MENU: QUALITY

Figure 44 shows the main screen of the **Quality** display menu, showing all the device's quality parameters.

Figure 44:Quality display menu, main screen.

Press the key to enter the display menu.
Use the and keys to toggle between the different screens.

Table 24: Quality display menu.

Quality display menu
NOMINAL VOLTAGE 163.00 **Rated voltage**
SWELL SAG INTERRU 105 113 205 **Detected events meter:** **SWELL,** no. of overvoltages detected. **SAG,** no. of gaps detected. **INTERRU,** no. of outages detected. The meters reset every time a new data log is started and when the device restart.
TRANSIENTS 2435 **Meter counting the no. of transients detected,** resets every time a new data log is started and when the device restart.
MAIN MENU Press the key to quit the display menu.

5.4.- DISPLAY MENU: COMMUNICATIONS

Figure 45 shows the main screen of the **Communications** display menu, showing full information about the device's active communications.

```
COMMUNICATIONS
```

Figure 45:Communications display menu, main screen.

Press the key to enter the display menu.
Use the and keys to toggle between the different screens.

Table 25: Communications display menu.

Communications display menu	
WIFI CONFIG ACCESS POINT **Wi-Fi configuration type**	
WIFI SSID MYeBOX_083115331025 **SSID,** Name of the **MYeBOX** network if **Wi-Fi configuration type** is *Access Point*, or name of the corporate network if the configuration type is *Network*.	
WIFI IP 172.111.255.001 **IP** of the Wi-Fi network.	
WIFI SIGNAL 86 % **Level of Wi-Fi signal**, value between 0% and 100%, if **Wi-Fi configuration type** is *Network*.	
Note: *Screen visible on the* ***MYeBOX 1500*** *model* 3G NETWORK apn.vodafone.es **Name of the 3G network**	***Note:*** *Screen visible on the* ***MYeBOX-1500-4G*** *model* MODEM NETWORK apn.vodafone.es **Name of the 4G network**
Note: *Screen visible on the* ***MYeBOX 1500*** *model* 3G IP 172.111.255.001 **IP** of the 3G network	***Note:*** *Screen visible on the* ***MYeBOX-1500-4G*** *model* MODEM IP 172.111.255.001 **IP** of the 4G network

Table 25 (Continued): Communications display menu.

Communications display menu	
Note: *Screen visible on the* ***MYeBOX 1500*** *model* 3G SIGNAL 86 % **Level of 3G signal**, value between 0% and 100%.	***Note:*** *Screen visible on the* ***MYeBOX-1500-4G*** *model* MODEM SIGNAL 86 % **Level of 4G signal**, value between 0% and 100%.
Note: *Screen visible on the* ***MYeBOX 1500 / MYeBOX-1500-4G*** *model* IMEI 357784047309511 **IMEI code** (International Mobile Station Equipment Identity)	
MAIN MENU Press the key to quit the display menu.	

5.5.- DISPLAY MENU: DATE/TIME

Figure 46 shows the main screen of the **Date/Time** display menu, showing the current date and time.

DATE/TIME

Figure 46:Date/Time display menu, main screen.

Press the key to enter the display menu.
Use the and keys to toggle between the different screens.

Table 26: Date/Time display menu.

Date/Time display menu
DATA TIME 05/03/2015 16:00:50 **Current date and time.** The date can be shown in *dd/mm/yyyy* format or *mm/dd/yyyy* format, based on the option programmed on the mobile application.
MAIN MENU Press the key to quit the display menu.

5.6.- DISPLAY MENU: INFORMATION

Figure 47 shows the main screen of the **Information** display menu, showing full information about the device.

```
INFORMATION
```

Figure 47:Information display menu, main screen.

Press the key to enter the display menu.
Use the and keys to toggle between the different screens.

Table 27: Information display menu.

Information display menu
`MEMORY SPACE 75 %` **Memory space** available. ***Note:*** *Available memory space is never 100%, not even after complete deletion of the database, as a new empty database is generated.*
`BATTERY LEVEL 99 %` **Battery charge level**
`REGISTER CODE 203591F559255F00` **ID number of the device**
`CODE ERROR 0x0006` **Code error,** 0x0000 indicates that there are no errors on your device. All possible error codes of the unit are shown in **Table 28**.
`VERSION 000.001.039` **Device version**
`MAIN MENU` Press the key to quit the display menu.

The error code displayed by the device is the hexadecimal value of all the error bits that are active in **MyEBOX**. **Table 28** shows the description and action of each error bit.

Table 28: Error code.

Error bit	Description	Action
0000 0000 0000 0000	There is no error	-
0000 0000 0000 0001	Memory (DDR) error	Turn the device off and then on again. If the problem persists contact the Technical Assistance Service.
0000 0000 0000 0010	MicroSD1 memory error	Check that the MicroSD memory card has been inserted correctly in its slot. If the problem persists contact the Technical Assistance Service.
0000 0000 0000 0100	MicroSD2 memory error	
0000 0000 0000 1000	Memory (NAND) error	Turn the device off and then on again. If the problem persists contact the Technical Assistance Service.
0000 0000 0001 0000	3G communications error	
0000 0000 0010 0000	Wi-Fi communications error	
0000 0000 0100 0000	UART 1 error	
0000 0000 1000 0000	UART 2 error	
0000 0001 0000 0000	Processor error	
0000 0010 0000 0000	Keyboard error	
0000 0100 0000 0000	Measurement error in the ADC1 converter	
0000 1000 0000 0000	Measurement error in the ADC2 converter	
0001 0000 0000 0000	Incompatibility with the Modbus version	Update the device's binary. If the problem persists contact the Technical Assistance Service.
0010 0000 0000 0000	Keyboard configuration error	Turn the device off and then on again. If the problem persists contact the Technical Assistance Service.

Example: *The device displays error code:* ***0x11EE****. To see what errors the device has, the error code has to be converted into binary:*

Table 29: Example Error code.

Error Code																		
0x11EE: b 0001 0001 1110 1110																		
0	0	0	1		0	0	0	1		1	1	1	0		1	1	1	0
			Incompatibility Modbus					Processor error		UART 2 error	UART 1 error	Wi-Fi error			NAND error	MicroSD2 error	MicroSD1 error	

The device found errors in the MicroSD1, MicroSD1, NAND memories, in Wi-Fi communications, in UART 1 and 2, in the processor and in the Modbus version. The device needs to be restarted, and if the problem persists, contact sales support.

5.7.- DISPLAY MENU: ENERGY RATIOS

Figure 48, shows the main screen of the Energy Ratios menu, displaying all of the device's energy ratios.

```
ENERGY RATIOS
```

Figure 48: Energy Ratios display menu, main screen.

Press the key to enter the display menu.
Use the and keys to toggle between the different screens.

Table 30: Energy Ratios display menu

Energy Ratios display menu
hourT1+ costT1+ 3 5.34567 **No. of hours of the active Tariff 1** (Energy Consumed) **Cost per kWh of Tariff 1** (Energy Consumed)
KgCO2T1+ 280.76544 **CO_2 emissions of Tariff 1** (Energy Consumed)
hourT1- costT1- 2 5.25244 **No. of hours of the active Tariff 1** (Energy Generated) **Cost per kWh of Tariff 1** (Energy Generated)
KgCO2T1- 125.85855 **CO_2 emissions of Tariff 1** (Energy Generated)
hourT2+ costT2+ 1 2.32160 **No. of hours of the active Tariff 2** (Energy Consumed) **Cost per kWh of Tariff 2** (Energy Consumed)
KgCO2T2+ 150.70044 **CO_2 emissions of Tariff 2** (Energy Consumed)

Table 30 (Continued) : Energy Ratios display menu

Menú de visualización Measure
hourT2- 5 costT2- 7.85165 **No. of hours of the active Tariff 2** (Energy Generated) **Cost per kWh of Tariff 2** (Energy Generated)
KgCO2T2- 50.70000 **CO_2 emissions of Tariff 2** (Energy Generated)
MAIN MENU Press the key to quit the display menu.

6.- CONFIGURATION

The device's configuration is organised into different menus, as shown in **Figure 49**.

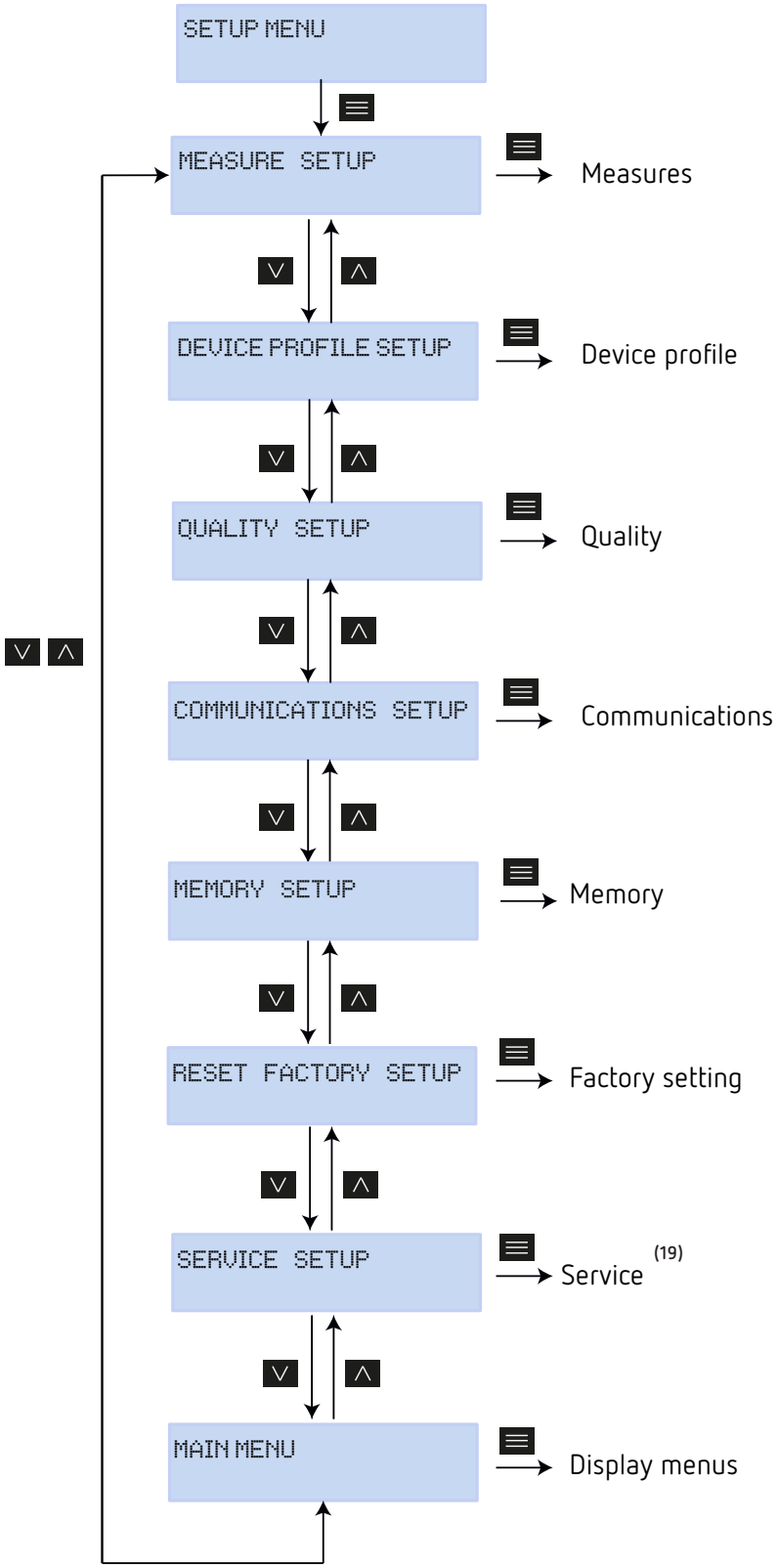

Figure 49:MYeBOX configuration menu.

(19)The **Service Setup** *menu is the service menu of the device for internal use, and is of no use to the* **MYeBOX** *user.*

If from any setup menu screen no key is pressed for 5 minutes, the device quits the setup menu and returns to the Phase-Neutral Voltages screen of the **Measure** display menu.

Note: *Setup menu changes must be made while data logging is off.*

6.1.- SETUP MENU: MEASURE SETUP

Figure 50 shows the main screen of the **Measure** setup menu, where the device's measurement parameters are configured.

Figure 50:Measure setup menu, main screen.

Press the key to enter the setup menu.

6.1.1.- RATED VOLTAGE

This screen is used to configure the rated phase - neutral voltage value.

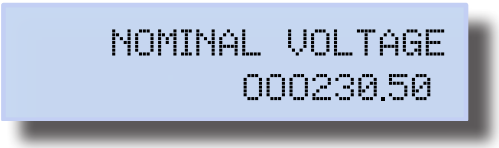

Press the key to enter edit mode.

Use the and keys to write or change the value of the blinking digit.
When the value on the screen is as desired, use the and keys to move the editing cursor.

Minimum configuration value: (Rated Voltage / Voltage Ratio) ≥ 50.
Maximum configuration value: (Rated Voltage / Voltage Ratio) ≤ 1000.
Maximum possible voltage ratio: 9999.

Note: *The voltage ratio is the ratio between the primary and secondary voltage.*

Press the key to confirm.

Use the and keys to toggle between the menu's setup screens.

Note: *To ensure the device works correctly, this parameter must* ***always*** *be configured. In installations without a Neutral, the theoretical phase-neutral rated voltage must be configured. If there is a transformation ratio, the phase-neutral rated voltage of the primary must be configured.*

6.1.2.- PRIMARY VOLTAGE

This screen is used to configure the primary winding of the voltage transformer.

```
PRIMARY VOLTAGE
        000001
```

Press the key to enter edit mode.
Use the and keys to write or change the value of the blinking digit.
When the value on the screen is as desired, use the and keys to move the editing cursor.

Minimum configuration value: 1 V.
Maximum configuration value: 500000 V.

Press the key to confirm.

Use the and keys to toggle between the menu's setup screens.

6.1.3.- SECONDARY VOLTAGE

This screen is used to configure the secondary winding of the voltage transformer.

```
SECONDARY VOLTAGE
            001.5
```

Press the key to enter edit mode.
Use the and keys to write or change the value of the blinking digit.
When the value on the screen is as desired, use the and keys to move the editing cursor.

Minimum configuration value: 1.0 V.
Maximum configuration value: 999.9 V.

Press the key to confirm.

Use the and keys to toggle between the menu's setup screens.

6.1.4.- PHASE CLAMP SCALE

This screen is used to select the scale of the clamps selected for measuring the phase.
Note: *If the clamp only has one scale, this parameter cannot be edited.*

```
PHASE CLAMP SCALE
          LOW
```

Press the key to enter edit mode.
Use the keys and to browse the different options:

Hi, MEDIUM or LOW. (See "***3.5.- CURRENT CLAMPS***").

Press the key to confirm the option selected.

Use the and keys to toggle between the menu's setup screens.

6.1.5.- PRIMARY WINDING OF THE CURRENT TRANSFORMER

Note: *This parameter is only shown when a **CPG-5** clamp is connected.*

This screen is used to configure the primary winding of the current transformer, for the phase measurement.

```
PHASE CURRENT TRANSF
             05000
```

Press the key to enter edit mode.
Use the and keys to write or change the value of the blinking digit.
When the value on the screen is as desired, use the and keys to move the editing cursor.

Minimum configuration value: 1 A.
Maximum configuration value: 10000 A.

Press the key to confirm.

Use the and keys to toggle between the menu's setup screens.

6.1.6.- NEUTRAL CLAMP SCALE

This screen is used to select the scale of the clamp selected for measuring the neutral.
Note: *If the clamp only has one scale, this parameter cannot be edited.*

```
NEUTRAL CLAMP SCALE
                LOW
```

Press the key to enter edit mode.
Use the keys and to browse the different options:

Hi, MEDIUM or LOW. (See "***3.5.- CURRENT CLAMPS***").

Press the key to confirm the option selected.

Use the and keys to toggle between the menu's setup screens.

6.1.7.- PRIMARY WINDING OF THE NEUTRAL CURRENT TRANSFORMER

Note: *This parameter is only shown when a **CPG-5** clamp is connected.*

This screen is used to configure the primary winding of the current transformer, for measuring the neutral.

```
NEUTR CURRENT TRANSF
              05000
```

Press the key to enter edit mode.
Use the and keys to write or change the value of the blinking digit.
When the value on the screen is as desired, use the and keys to move the editing cursor.

Minimum configuration value: 1 A.
Maximum configuration value: 10000 A.

Press the key to confirm.

Use the and keys to toggle between the menu's setup screens.

6.1.8.- CLAMP SCALE FOR MEASURING THE LEAKAGE CURRENT, ILeak

Note: *Configuration parameter available for the* ***MYeBOX 1500 / MYeBOX-1500-4G*** model.

This screen is used to select the scale of the clamp selected for measuring the leakage current.
Note: *If the clamp only has one scale, this parameter cannot be edited.*

```
LEAK  CLAMP SCALE
            LOW
```

Press the key to enter edit mode.
Use the keys and to browse the different options:

Hi, MEDIUM or LOW. (See "***3.5.- CURRENT CLAMPS***").

Press the key to confirm the option selected.

Use the and keys to toggle between the menu's setup screens.

6.1.9.- PRIMARY WINDING OF THE LEAKAGE CURRENT TRANSFORMER

Note: *Configuration parameter available for the* ***MYeBOX 1500 / MYeBOX-1500-4G*** model.

This screen is used to configure the primary winding of the current transformer, for measuring the leakage current.

```
LEAK  CURRENT TRANSF
            05000
```

Press the key to enter edit mode.
Use the and keys to write or change the value of the blinking digit.
When the value on the screen is as desired, use the and keys to move the editing cursor.

Minimum configuration value: 1 A.
Maximum configuration value: 10000 A.

Press the key to confirm.

Use the and keys to toggle between the menu's setup screens.

6.1.10.- FREQUENCY

This screen is used to select the operating frequency.

Press the key to enter edit mode.
Use the and keys to browse the different options:

50.00, 50 Hz.

60.00, 60 Hz,

Press the key to confirm the option selected.

Use the and keys to toggle between the menu's setup screens.

6.1.11.- SAVE

Press the key to save the changes and to go to the main screen of the **Measure** setup menu.

Use the and keys to toggle between the menu's setup screens.

6.1.12.- EXIT

Press the key to exit to the main screen of the **Measure** setup menu without saving modified values.

Use the and keys to toggle between the menu's setup screens.

6.2.- SETUP MENU: DEVICE PROFILE SETUP

Figure 51 shows the main screen of the **Device Profile** setup menu where the device's profile can be configured.

Figure 51:Device Profile setup menu, main screen.

Press the key to enter the setup menu.

6.2.1.- NAME OF THE DEVICE

This screen is used to configure the name used to identify the device.

Press the key to enter edit mode.
Use the and keys to write or change the value of the blinking digit.
When the value on the screen is as desired, use the and keys to move the editing cursor.

Press the key to confirm.

Use the and keys to toggle between the menu's setup screens.

6.2.2.- MEASUREMENT NAME

This screen is used to configure the name under which to save the data log in the database. All the measurements will be displayed in the application with the recording start date next to the name of the measurement.

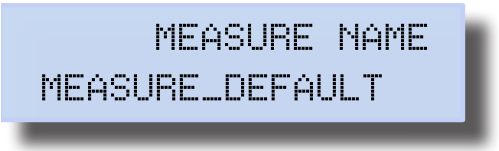

Press the key to enter edit mode.
Use the and keys to write or change the value of the blinking digit.
When the value on the screen is as desired, use the and keys to move the editing cursor.

Press the key to confirm.

Use the and keys to toggle between the menu's setup screens.

6.2.3.- TYPE OF INSTALLATION

This screen is used to configure the installation type.

```
     SELECT CIRCUIT
3 PHASES + NEUTRAL
```

Press the key to enter edit mode.
Use the keys and to browse the different options:

- 1 PHASE + NEUTRAL, Single-phase network measurement, phase to neutral, with a 2-wire connection.
- 2 PHASES, Single-phase network measurement, phase to phase, with a 2-wire connection.
- 2 PHASES + NEUTRAL, Two-phase network measurement with a 3-wire connection.
- 3 PHASES, Three-phase network measurement with a 3-wire connection.
- 3 PHASES + NEUTRAL, Three-phase network measurement with a 4-wire connection.
- ARON, Three-phase network measurement with a 3-wire connection and an ARON connection.

Press the key to confirm the option selected.
Use the and keys to toggle between the menu's setup screens.

6.2.4.- SAVE

Press the key to save the changes and to go to the main screen of the **Device Profile** setup menu.

```
                SAVE
```

Use the and keys to toggle between the menu's setup screens.

6.2.5.- EXIT

Press the key to exit to the main screen of the **Device Profile** setup menu without saving modified values.

```
                EXIT
```

Use the and keys to toggle between the menu's setup screens.

6.3.- SETUP MENU: QUALITY SETUP

Figure 52 shows the main screen of the **Quality** setup menu, where the device's quality parameters are configured.

```
QUALITY SETUP
```

Figure 52:Quality setup menu, main screen.

Press the key to enter the setup menu.

6.3.1.- OVERVOLTAGE, SWELL

This screen is used to configure the threshold value for logging an overvoltage, as a percentage of the rated voltage value.

```
SOBRETENSION / SWELL
                110 %
```

Press the key to enter edit mode.
Use the and keys to write or change the value of the blinking digit.
When the value on the screen is as desired, use the and keys to move the editing cursor.

Minimum configuration value: 100%
Maximum configuration value: 150%
Note: *Set the value to 0 to stop recording overvoltages.*

Press the key to confirm.

Use the and keys to toggle between the menu's setup screens.

6.3.2.- GAP, SAG

This screen is used to configure the threshold value for logging gaps, as a percentage of the rated voltage value.

```
HUECO      /       SAG
                090 %
```

Press the key to enter edit mode.
Use the and keys to write or change the value of the blinking digit.
When the value on the screen is as desired, use the and keys to move the editing cursor.
Minimum configuration value: 50%
Maximum configuration value: 97%

Note: *Set the value to 0 to stop recording gaps.*
Press the key to confirm.

Use the and keys to toggle between the menu's setup screens.

6.3.3.- OUTAGE, INTERRUPTION

This screen is used to configure the threshold value for logging outages, as a percentage of the rated voltage value.

```
CORTE / INTERRUPTION
                010%
```

Press the key to enter edit mode.
Use the and keys to write or change the value of the blinking digit.
When the value on the screen is as desired, use the and keys to move the editing cursor.

Minimum configuration value: 1%
Maximum configuration value: 20%
Note: *Set the value to 0 to stop recording outages.*

Press the key to confirm.

Use the and keys to toggle between the menu's setup screens.

6.3.4.- TRANSIENTS, DISTURB

This screen is used to configure the distortion level coefficient for the detection of transients.

```
TRANSITORIO/DISTURB
                002.0
```

Press the key to enter edit mode.
Use the and keys to write or change the value of the blinking digit.
When the value on the screen is as desired, use the and keys to move the editing cursor.

Minimum configuration value: 1.0
Maximum configuration value: 100.0
Note: *Recommended value 5.0*
Note: *Set the value to 0 to stop detecting transients.*
Press the key to confirm.
Use the and keys to toggle between the menu's setup screens.

6.3.5.- SAVE

Press the key to save the changes and to go to the main screen of the **Quality** setup menu.

SAVE

Use the and keys to toggle between the menu's setup screens.

6.3.6.- EXIT

Press the key to exit to the main screen of the **Quality** setup menu without saving modified values.

EXIT

Use the and keys to toggle between the menu's setup screens.

6.4.- SETUP MENU: COMMUNICATIONS SETUP

Figure 53 shows the main screen of the **Communications** setup menu, where the device's communication parameters are configured.

COMMUNICATIONS SETUP

Figure 53:Communication setup menu, main screen.

Press the key to enter the setup menu.

6.4.1.- Wi-Fi CONFIGURATION

This screen is used to select the type of Wi-Fi configuration.

WIFI COMM
ACCESS POINT

Press the key to enter edit mode.
Use the keys and to browse the different options:

NETWORK, Select this option when the unit is going to connect to a previously created corporate Wi-Fi network.

ACCESS POINT, After selecting this option, the device generates a Wi-Fi network so the user can connect from the mobile application.

Press the key to confirm the option selected.

Use the and keys to toggle between the menu's setup screens.

6.4.2.- SSID

Note: *This configuration parameter cannot be edited if* ACCESS POINT *was selected for the "**6.4.1.- Wi-Fi CONFIGURATION**"* parameter.

This screen is used to configure the SSID (Service Set Identifier), or the name of the corporate network.

```
          WIFI SSID
MYeBOX_08311533 1025
```

Press the key to enter edit mode.
Use the and keys to write or change the value of the blinking digit.
When the value on the screen is as desired, use the and keys to move the editing cursor.

Press the key to confirm.

Use the and keys to toggle between the menu's setup screens.

6.4.3.- WPS

Note: *This configuration parameter cannot be edited if* ACCESS POINT *was selected for the "**6.4.1.- WI-FI CONFIGURATION**"* parameter.

This screen is used to select WPS activation, which is used to easily connect the device to networks.
To establish the connection via WPS, activate the WPS button on the router to which the **MyeBOX** will be connected. The router will be prepared to accept new devices for 1 or 2 minutes after you press this button.
This is when WPS must be activated in the **MyeBOX**.

```
ACTIVATE WPS
        YES
```

Press the key to enter edit mode.
Use the keys and to browse the different options:

YES, WPS activated.

NO, WPS deactivated.

Press the key to confirm the option selected.

Note: *The device activates the WPS after the configuration is saved (**"6.4.10.- SAVE"**).*

Use the and keys to toggle between the menu's setup screens.

6.4.4.- PASSWORD

Note: *This configuration parameter cannot be edited if* ACCESS POINT *was selected for the "**6.4.1.- Wi-Fi** **CONFIGURATION"** parameter or* YES *was selected for the "**6.4.3.- WPS"*** parameter

This screen is used to configure the Wi-Fi network password.

```
WIFI PASSWORD
**********************
```

Press the key to enter edit mode.
Use the and keys to write or change the value of the blinking digit.
When the value on the screen is as desired, use the and keys to move the editing cursor.

Maximum number of characters: 32.

Press the key to confirm.
Use the and keys to toggle between the menu's setup screens.

6.4.5.- ENABLING 3G / 4G COMMUNICATIONS

Note: *Configuration parameter available for the **MYeBOX 1500 / MYeBOX-1500-4G*** model.

This screen is used to select whether to enable 3G (**MYeBOX 1500**) or 4G (**MYeBOX-1500-4G**) communications.

```
3G COMMUNICATION
          ENABLE
```

MYeBOX 1500

```
MODEM COMMUNICATION
          ENABLE
```

MYeBOX-1500-4G

Press the key to enter edit mode.
Use the keys and to browse the different options:

ENABLE, 3G / 4G communications enabled.

DISABLE, 3G / 4G communications disabled.

Press the key to confirm the option selected.
Use the and keys to toggle between the menu's setup screens.

6.4.6.- APN, ACCESS POINT NAME

Note: *Configuration parameter available for the* ***MYeBOX 1500 / MYeBOX-1500-4G*** model.
Note: *This configuration parameter cannot be edited if* DISABLE *was selected for the "****6.4.5.- ENABLING 3G / 4G COMMUNICATIONS****"* parameter.

This screen is used to configure the name of the APN for 3G (**MYeBOX 1500**) or 4G (**MYeBOX-1500-4G**) communications.

```
                APN NAME
VODAFONE
```

Press the key to enter edit mode.
Use the and keys to write or change the value of the blinking digit.
When the value on the screen is as desired, use the and keys to move the editing cursor.

Press the key to confirm.

Use the and keys to toggle between the menu's setup screens.

6.4.7.- APN, USER

Note: *Configuration parameter available for the* ***MYeBOX 1500 / MYeBOX-1500-4G*** model.

Note: *This configuration parameter cannot be edited if* DISABLE *was selected for the "****6.4.5.- ENABLING 3G / 4G COMMUNICATIONS****"* parameter.

This screen is used to configure the APN user for 3G (**MYeBOX 1500**) or 4G (**MYeBOX-1500-4G**) communications.

```
              APN  USER
TSW52
```

Press the key to enter edit mode.
Use the and keys to write or change the value of the blinking digit.
When the value on the screen is as desired, use the and keys to move the editing cursor.

Press the key to confirm.

Use the and keys to toggle between the menu's setup screens.

6.4.8.- APN, PASSWORD

Note: *Configuration parameter available for the* ***MYeBOX 1500 / MYeBOX-1500-4G*** model.
Note: *This configuration parameter cannot be edited if* DISABLE *was selected for the "****6.4.5.- ENABLING 3G / 4G COMMUNICATIONS****"* parameter.

This screen is used to configure the APN password for 3G (**MYeBOX 1500**) or 4G (**MYeBOX-1500-4G** communications.

Press the key to enter edit mode.
Use the and keys to write or change the value of the blinking digit.
When the value on the screen is as desired, use the and keys to move the editing cursor.

Maximum number of characters: 32.

Press the key to confirm.
Use the and keys to toggle between the menu's setup screens.

6.4.9.- PIN

Note: *Configuration parameter available for the* ***MYeBOX 1500 / MYeBOX-1500-4G*** model.

Note: *This configuration parameter cannot be edited if* DISABLE *was selected for the "****6.4.5.- ENABLING 3G / 4G COMMUNICATIONS****"* parameter.

This screen is used to configure the PIN code for 3G (**MYeBOX 1500**) or 4G (**MYeBOX-1500-4G**) communications.

MYeBOX 1500

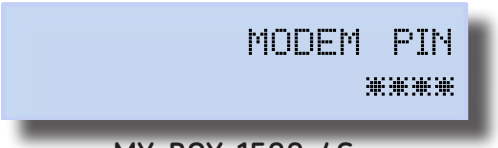

MYeBOX-1500-4G

Press the key to enter edit mode.
Use the and keys to write or change the value of the blinking digit.
When the value on the screen is as desired, use the and keys to move the editing cursor.

Press the key to confirm.

Use the and keys to toggle between the menu's setup screens.

6.4.10.- SAVE

Press the key to save the changes and to go to the main screen of the **Communications** setup menu.

SAVE

Use the and keys to toggle between the menu's setup screens.

6.4.11.- EXIT

Press the key to exit to the main screen of the **Communications** setup menu without saving modified values.

EXIT

Use the and keys to toggle between the menu's setup screens.

6.5.- SETUP MENU: MEMORY SETUP

Figure 54, shows the main screen of the **Memory** setup menu, where the memory for storing the database is configured.

MEMORY SETUP

Figure 54: Memory setup menu, main screen.

Press the key to enter the setup menu.

6.5.1.- COMPLETE DELETION OF THE DATABASE

This screen is used to choose whether to delete the database completely.

FORMAT MEMORY
NO

Press the key to enter edit mode.
Use the keys and to browse the different options:

NO. the database will not be completely deleted.

YES. the database will be completely deleted.

Press the key to confirm the option selected.
Use the and keys to toggle between the menu's setup screens.

6.5.2.- SAVE

Press the key to begin deletion of the database.

SAVE

While the deletion is being performed, the following screen will be shown:

SD FORMATTING....

At the end of the deletion process, different messages can appear, depending on the result:

SD FORMAT DONE, if the deletion has been correctly performed.
SD NOT DETECTED, if the device cannot detect the memory.
SD FORMAT ERROR, if the deletion has not been correctly performed.

The messages disappear after 5 seconds and the unit skips to the main screen of the **Memory** setup menu.

Use the and keys to toggle between the menu's setup screens.

6.5.3.- EXIT

Press the key to exit to the main screen of the **Memory** setup menu without saving modified values.

EXIT

Use the and keys to toggle between the menu's setup screens.

6.6.- SETUP MENU: RESET FACTORY SETUP

Figure 55 shows the main screen of the **Reset Factory** setup menu where the default values of the unit can be loaded.

RESET FACTORY SETUP

Figure 55: Reset facvtory setup menu, main screen.

Press the key to enter the setup menu.

6.6.1.- LOADING THE DEFAULT CONFIGURATION.

This screen is used to select whether to load the default configuration in the device, i.e. the original factory settings.

RESET FACTORY
NO

Press the key to enter edit mode.
Use the keys and to browse the different options:

NO. the default configuration will not be loaded.

YES. the default configuration will be loaded.

Press the key to confirm the option selected.
Use the and keys to toggle between the menu's setup screens.

6.6.2.- SAVE

Press the key to start loading the default configuration and skip to the main screen of the **Reset Factory** setup menu.

SAVE

Use the and keys to toggle between the menu's setup screens.

6.6.3.- EXIT

Press the key to exit to the main screen of the **Reset Factory** setup menu without saving modified values.

EXIT

Use the and keys to toggle between the menu's setup screens.

7.- WIRELESS COMMUNICATIONS

The device has the following wireless communications:

MYeBOX 150 model:

✓Wi-Fi communications.

MYeBOX 1500 / MYeBOX-1500-4G model:

✓Wi-Fi communications.
✓ 3G (**MYeBOX 1500)** or 4G (**MYeBOX-1500-4G)** communications.

7.1.- USAGE ENVIRONMENT AND HEALTH

Wireless communications emit radio frequency electromagnetic energy, like other radio devices.

Because wireless communications operate under the guidelines found in radio frequency standards and recommendations, they are safe for users to use.

In some settings and situations the use of wireless communications may be restricted by the building's owner of representatives of the organisation.
These may include:

✓Use of wireless connections on board aircraft, in hospitals or near service stations, blasting areas, medical implants or electronic medical devices implanted in the human body (pacemakers, etc.).

✓ In any other setting where the risk of interference with other devices or services is a hazard.

If you are not sure of the applicable usage policy for wireless devices in a specific organisation (airport, hospital, etc.) we recommend requesting permission to use wireless communications.

7.2.- LOCATION OF THE ANTENNAS

The device has two antennas for Wi-Fi, 3G and 4G connections.

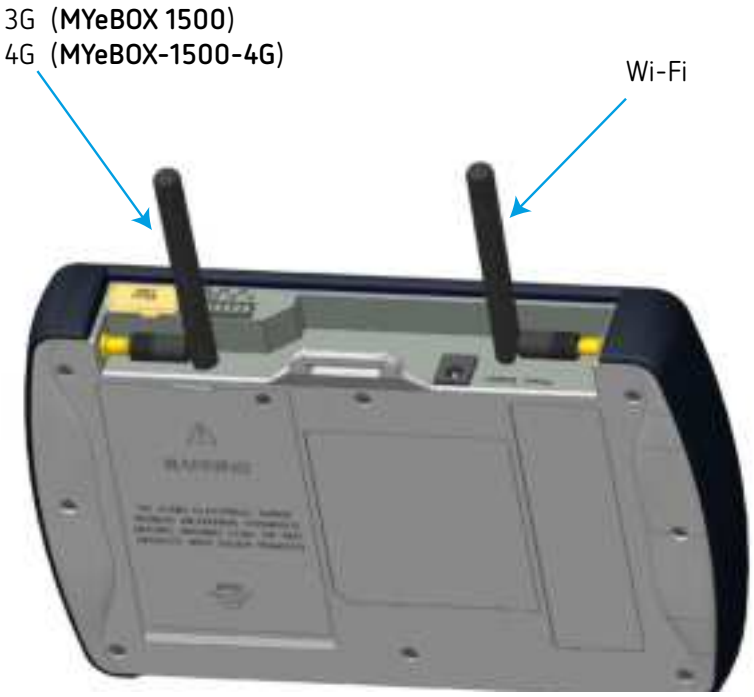

Figure 56:Location of the wireless antennas.

The antennas have a standard connector so they can be exchanged for larger ones if the application requires greater coverage.

7.3.- Wi-Fi COMMUNICATIONS

Wi-Fi is one of the most widely-used wireless technologies today, used to connect electronic devices and exchange information between them without a physical connection.

The **MYeBOX** has Wi-Fi communications over the 2.4 GHz band, in accordance with the IEEE 802.11b, IEEE 802.11g and IEEE 802.11n standards.

Wi-Fi communications can be configured through the mobile application or by using the device's display. See ***"6.4.- SETUP MENU: COMMUNICATIONS SETUP"*** and ***"5.4.- DISPLAY MENU: COMMUNICATIONS".***

Table 31: Security features of the Wi-Fi communications.

Security features of the Wi-Fi communications	
Security protocol	WPA2
SSL-encrypted communications via the web service	
Using the API via the web services requires basic authentication.	

7.4.- 3G (MYeBOX 1500 model) / 4G (MYeBOX-1500-4G model) COMMUNICATIONS

The **MYeBOX 1500 / MYeBOX-1500-4G** model has 3G / 4G communications, so the device can be connected and exchange data with other mobile devices without a Wi-Fi connection.
The only thing required is a SIM card.

3G / 4G communications can be configured through the mobile application or by using the device's display. See ***"6.4.- SETUP MENU: COMMUNICATIONS SETUP"*** and ***"5.4.- DISPLAY MENU: COMMUNICATIONS".***

Continued use of 3G / 4G can reduce battery use.

Note: *The **MYeBOX 1500** model only allows the use of 3G cards.*
*The **MYeBOX-1500-4G** model only allows the use of 4G cards.*

7.4.1.- INSERTING THE SIM CARD.

To avoid electric shocks, disconnect the measuring and power supply terminals before opening the cover.
Do not use the device without the cover in place.

The SIM card is located under the battery. See **Figure 57**. To remove it, follow the steps indicated in section ***"3.2.- BATTERY INSTALLATION".***

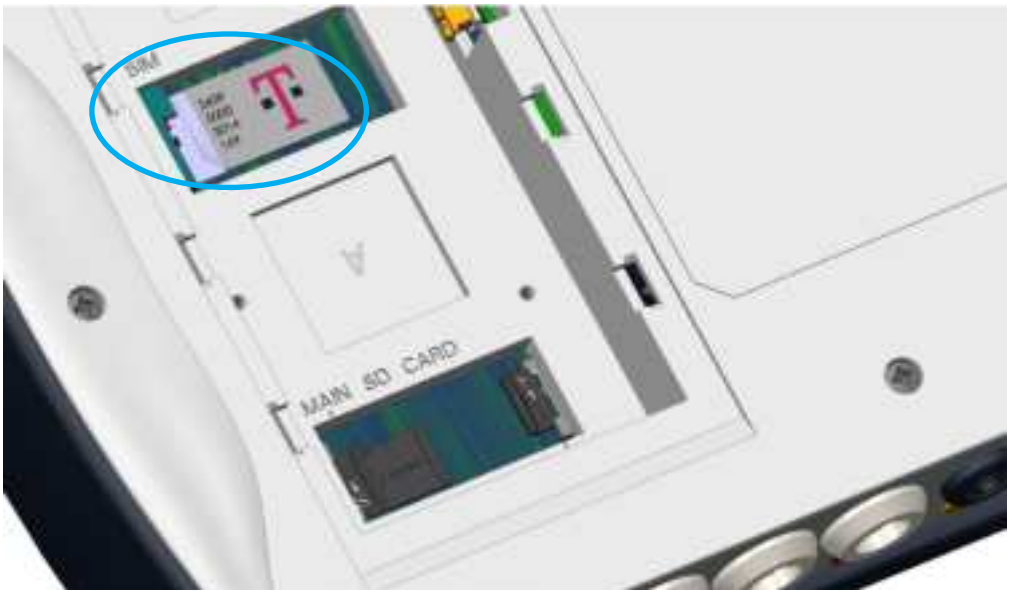

Figure 57:Location of the SIM card.

8.- MOBILE APPLICATION MYeBOX

The device has the **MYeBOX** mobile application, which allows users to wirelessly connect to the devices using Wi-Fi, 3G (**MYeBOX 1500** model) or 4G (**MYeBOX -1500-4G** model) communications and:

- ✓Fully configure the device.
- ✓Display all parameters in real time, both numerically and graphically.
- ✓View wave shapes.
- ✓Download the data log files stored on the MicroSD memory.
- ✓Program e-mail warnings when alarms occur.

The **MYeBOX** application is compatible with iOS and Android and there are versions for smartphones and tablets.

9.- MYeBOX Cloud

The device has a cloud application, **MYeBOX Cloud,** where users can send all the data logged on the MicroSD memory (see ***"4.8.2. MicroSD MEMORY"***) to be searched and analysed.

10.- SOFTWARE UPDATE

The device software can be updated in two ways:

- ✓Through a USB.
- ✓Through the MYeBOX mobile application.

Note: *Before updating the software, a backup copy of the device's data (in a file or by saving it in the Cloud) should be made, since if an anomaly is detected, the database will be automatically formatted.*

10.1.- UPDATING THROUGH USB

With **MYeBOX** switched on:

1.- Connect the device to a PC with the µUSB cable.

2.-The **MYeBOX** appears as a mass storage unit in the PC explorer.

3.- In the **MYeBOX** copy the update file **(firmware_myeBOX.bin)**

4.- After copying the file, disconnect the **MYeBOX** from the PC.

5.- Restart the **MYeBOX**; the device will be updated as soon as it starts up again.
Note: *After updating the **MYeBOX**, it will be automatically restarted.*

10.2.- UPDATING THROUGH THE MOBILE APPLICATION

With **MYeBOX** switched on:

1.- Open the **MYeBOX** mobile application.

2.- If there is a new version of the device, the application indicates this in the **Setup / Firmware** menu. And asks the user if they want to update the device.

3.- If the user confirms the update, it is started automatically.
Note: *After updating the* ***MYeBOX****, it will be automatically restarted.*

11.- TECHNICAL FEATURES

Power supply (AC power supply adaptor)		
Input		
Rated voltage	100 ... 240 V ~	
Frequency	47 ... 63 Hz	
Consumption	MYeBOX 150	MYeBOX 1500 MYeBOX-1500-4G
	22... 28 VA	25... 31 VA
Installation category	CAT II 300 V	
Output		
Rated voltage	9 V ⎓	
Consumption	MYeBOX 150	MYeBOX 1500 MYeBOX-1500-4G
	18 W	20 W

Voltage measurement circuit		
Voltage measurement margin	10 ...600 V ~ (PH-N)	
Frequency measurement margin	42.5 ... 69 Hz	
Input impedance	2.4 MΩ	
Minimum measurement voltage (Vstart)	10 V ~	
Maximum voltage input consumption	0.15 VA	
Installation category	MYeBOX 150 MYeBOX 1500	MYeBOX-1500-4G
	CAT III 600 V	CAT IV 600V

Current measurement circuit	
Type of clamp / Transformer	**Phase and neutral current measurement**
	Clamps: CPG-5, CPG-100, CPRG-500, CPRG-1000, CPG-200/2000, FLEX-Rxxx, Transformer with 250 mA or 333 mV output
	Leakage current measurement (MYeBOX 1500 / MYeBOX-1500-4G model)
	CFG-5, CFG-10, WG type transformers
Nominal current (In)	According to clamp **Table 5** and **Table 6**
Current measurement margin	1 ... 200 In %
Maximum current, impulse < 1s	3*In A
Minimum measurement current(Istart)	According to clamp **Table 5** and **Table 6**
Maximum current input consumption	0.0004 VA
Installation category	CAT III 600 V

Frequency of sampling		
MYeBOX 150	**50 Hz**	**60 Hz**
	44.8 kHz	53.76 kHz
MYeBOX 1500 / MYeBOX-1500-4G	57.6 kHz	69.12 kHz

Accuracy of measurements (20)	
Voltage measurement (Ph-N) (21)	Class 0.2 (10 ...600 V~) (IEC 61557-12) Clase A (23 ...345 V~) (IEC 61000-4-30)
Current measurement	Class 0.2 (1%...200% In) (IEC 61557-12)

(Continued) Accuracy of measurements [20]	
Measurement of active and apparent power (Vn 230/110 V~)	Class 0.5 ± 1 digit (IEC 61557-12)
Reactive power measurement (Vn 230/110 V~)	Class 1 ± 1 digit (IEC 61557-12)
Active energy measurement	Class 0.5S (IEC 62053-22)
Reactive energy measurement	Class 1 (IEC 62053-23)
Frequency measurement	Clase A (42.5 ... 69 Hz) (IEC 61000-4-30)
Power factor measurement	Class 0.5 (IEC 61557-12)
Voltage THD measurement	Class I (IEC 61000-4-7)
Voltage harmonics (up to 50th order)	Class I (IEC 61000-4-7)
Current THD measurement	Class I (IEC 61000-4-7)
Current harmonics (up to 50th order)	Class I (IEC 61000-4-7)
Pinst Flicker	3 % (IEC 61000-4-15)
Pst Flicker	5 % (0.2 ... 10Pst) (IEC 61000-4-15)
Voltage unbalance	Class A (IEC 61000-4-30)
Voltage asymmetry	Class A (IEC 61000-4-30)
Current unbalance	Class A (IEC 61000-4-30)
Current asymmetry	Class A (IEC 61000-4-30)

[20] Accuracy is given by the following measurement conditions for input 2V: exclusion of errors produced by the clamps and external voltage transformers, with a range in temperature of 5 ... 45 °C and power factor 0 ... 1.

[21] Depending on model.

Transistor digital outputs (MYeBOX 1500 / MYeBOX-1500-4G model)	
Quantity	2
Type	Transistor
Maximum voltage	48 V
Maximum current	90 mA

Digital inputs (MYeBOX 1500 / MYeBOX-1500-4G model)[22]	
Quantity	2
Type	Potential-free contact
Insulation	2.7 kV
Maximum short-circuit current	5 mA
Maximum voltage in open circuit	4 ... 9 V ⎓
Maximum frequency	100 Hz

[22] Must be connected to SELV circuit.

Wi-Fi communications	
Band	2.4 GHz
Standards	IEEE 802.11 b / g / n
Output power	20 dBm
Effective radiated power (ERP)	< 57 dBm
Effective isotropic radiated power (EIRP)	17 dBm
Power of the transmitter	17 dBm
Specific absorption rate (SAR)	0.08 W/Kg

Modem Communications (MYeBOX 1500 model)	
Networks : MYeBOX 1500-3G	UMTS/HSPA: 850/900/1900/2100 MHz GSM/GPRS/EDGE: 850/900/1800/1900 MHz
Networks : MYeBOX 1500-3G_CA	UMTS/HSPA/HSPA+: 850/1900/2100 MHz GSM/GPRS/EDGE: 850/900/1800/1900 MHz
Networks : MYeBOX 1500-3G_XP	UMTS/HSPA/HSPA+: 900/2100 MHz GSM/GPRS/EDGE: 850/900/1800/1900 MHz

(Continued) Modem Communications (MYeBOX 1500 model)	
Maximum output power	UMTS/3G (Power Class 3): 24 dBm GSM850/900 (Power Class 4): 33 dBm GSM1800/1900 (Power Class 1): 30 dBm

Modem Communications (MYeBOX-1500-4G model)	
Networks	LTE-FDD B12 / LTE-FDD B13 / LTE-FDD B28: 700 MHz LTE-FDD B18/ LTE-FDD B19 /LTE-FDD B20 / WCDMA B6 / WCDMA B19: 800 MHz LTE-FDD B5/ LTE-FDD B26 / WCDMA B5 / GSM / GSM(8-PSK): 850 MHz LTE-FDD B8 / WCDMA B8 / EGSM / EGSM(8-PSK): 900 MHz LTE-FDD B4 / LTE-FDD B66 / WCDMA B4: 1700 MHz LTE-FDD B3 / DCS / DCS(8-PSK): 1800 MHz LTE-FDD B2 / LTE-FDD B25 / LTE-TDD B39 / WCDMA B2 / PSC / PSC(8-PSK): 1900 MHz LTE-FDD B1 / LTE-TDD B34 / WCDMA B1: 2100 MHz LTE-TDD B40: 2300 MHz LTE-TDD B41: 2500 MHz LTE-FDD B7 /LTE-TDD B38: 2600 MHz
Protocols	TCP/IP/IPV4/IPV6/Multi-PDP/FTP/FTPS/HTTP/ HTTPS/DNS
Max. output power	LTE-FDD / LTE-TDD: 23 dBm ± 2.7dB WCDMA: 24 dBm + 1 / - 3 dB GSM 850 / EGSM 900: 33 dBm ± 2dB DCS 1800 / PCS 1900: 30 dBm ± 2dB GSM 850(8-PSK) / EGSM 900(8-PSK) : 27 dBm ± 3dB DCS 1800 (8-PSK) / PCS 1900 (8-PSK): 26 dBm + 3/-4dB

User interface		
Display	20 alphanumeric characters x 2 lines	
Keypad	5 keys, 2 buttons	
LED	MYeBOX 150	MYeBOX 1500 MYeBOX-1500-4G
	14 LEDs	21 LEDs
Connectivity	µUSB	

Internal battery	
Type	Lithium
Voltage	3 V
Capacity	220 mAh
Battery life	10 years

Battery					
Type	Lithium				
Voltage	3.7 V				
Capacity	3700 mAh				
Charge time	6 hours				
Charge temperature	0 ... 40°C				
Autonomy [23]	MYeBOX 150	MYeBOX 1500		MYeBOX-1500-4G	
	2 hours	without 3G	with 3G	without 4G	with 4G
		2 hours	50 min	2 hours	50 min

[23] Depending on the environmental conditions and activated functions.

MicroSD Memory	
Format	FAT 32
Capacity	16 Gb
Log time	1s, 1m, 5m, 15m, 1h, 1d

Environmental features	
Operating temperature	-10ºC... +50ºC
Storage temperature	-20ºC... +60ºC
Relative humidity (with no condensation)	5 ... 95%
Maximum altitude	2,000 m
Protection degree	IP30

Mechanical features		
Dimensions	**Figure 58** (mm)	
Weight	MYeBOX 150	MYeBOX 1500 MYeBOX-1500-4G
	950 g	975 g
Enclosure	V0 self-extinguishing plastic	

Standards	
Electrical equipment for measurement, control and laboratory use - EMC requirements - Part 1: General requirements	EN 61326-1:2013
Safety requirements for electrical equipment for measurement, control, and laboratory use Part 1: General requirements	IEC 61010-1:2010, 3rd Edition

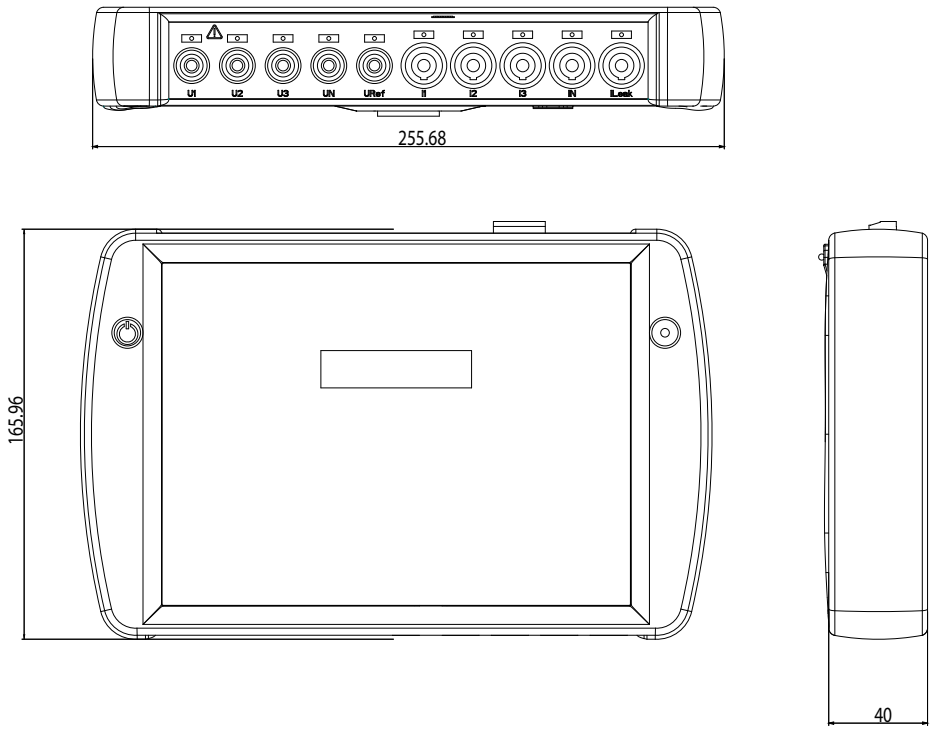

Figure 58: MYeBOX dimensions.

12.- MAINTENANCE AND TECHNICAL SERVICE

The device does not need any maintenance.
Only clean the screen with soapy water and dry with a soft dry cloth.

In the case of any query in relation to device operation or malfunction, please contact the **CIRCUTOR S.A.U.** Technical Support Service.

Technical Assistance Service
Vial Sant Jordi, s/n, 08232 - Viladecavalls (Barcelona)
Tel: 902 449 459 (Spain) / +34 937 452 919 (outside of Spain)
email: sat@circutor.com

13.- GUARANTEE

CIRCUTOR guarantees its products against any manufacturing defect for two years after the delivery of the units.

CIRCUTOR will repair or replace any defective factory product returned during the guarantee period.

- No returns will be accepted and no unit will be repaired or replaced if it is not accompanied by a report indicating the defect detected or the reason for the return.
- The guarantee will be void if the units has been improperly used or the storage, installation and maintenance instructions listed in this manual have not been followed. "Improper usage" is defined as any operating or storage condition contrary to the national electrical code or that surpasses the limits indicated in the technical and environmental features of this manual.
- **CIRCUTOR** accepts no liability due to the possible damage to the unit or other parts of the installation, nor will it cover any possible sanctions derived from a possible failure, improper installation or "improper usage" of the unit. Consequently, this guarantee does not apply to failures occurring in the following cases:
  - Overvoltages and/or electrical disturbances in the supply;
  - Water, if the product does not have the appropriate IP classification;
  - Poor ventilation and/or excessive temperatures;
  - Improper installation and/or lack of maintenance;
  - Buyer repairs or modifications without the manufacturer's authorisation.

14.- EU DECLARATION OF CONFORMITY

Circutor

CIRCUTOR, SA – Vial Sant Jordi, s/n
08232 Viladecavalls (Barcelona) Spain
(+34) 937 452 900 – sdo@circutor.com

(ES)

DECLARACIÓN UE DE CONFORMIDAD

La presente declaración de conformidad se expide bajo la exclusiva responsabilidad de CIRCUTOR con dirección en **Vial Sant Jordi, s/n – 08232 Viladecavalls (Barcelona) España**

Producto:

Analizador de redes portátil

Serie:

MYeBOX 150, MYeBOX 1500

Marca:

CIRCUTOR

El objeto de la declaración es conforme con la legislación de armonización pertinente en la UE, siempre que sea instalado, mantenido y usado en la aplicación para la que ha sido fabricado, de acuerdo con las normas de instalación aplicables y las instrucciones del fabricante

2014/30/EU: EMC Directive — 2014/35/EU: Low Voltage Directive
2014/53/EU: Radio Equipment Directive — 2015/863/EU: RoHS3 Directive

Está en conformidad con la(s) siguiente(s) norma(s) u otro(s) documento(s) normativos(s):

EN IEC 63000:2018
IEC 61010-1:2010+AMD1:2016 Ed 3.0 — IEC 61010-2-030:2017 Ed 2.0
IEC 61326-1:2012 Ed 2.0 — ETSI EN 301-489-1 v2.1.1
ETSI EN 301 489-52 v1.1.0 — ETSI EN 301 489-17 V3.1.1

Año de marcado "CE":

2016

(EN)

EU DECLARATION OF CONFORMITY

This declaration of conformity is issued under the sole responsibility of CIRCUTOR with registered address at Vial Sant Jordi, s/n – 08232 Viladecavalls (Barcelona) Spain

Product:

Portable Power analyzer

Series:

MYeBOX 150, MYeBOX 1500

Brand:

CIRCUTOR

The object of the declaration is in conformity with the relevant EU harmonisation legislation, provided that it is installed, maintained and used for the application for which it was manufactured, in accordance with the applicable installation standards and the manufacturer's instructions

2014/30/EU: EMC Directive — 2014/35/EU: Low Voltage Directive
2014/53/EU: Radio Equipment Directive — 2015/863/EU: RoHS3 Directive

It is in conformity with the following standard(s) or other regulatory document(s):

EN IEC 63000:2018
IEC 61010-1:2010+AMD1:2016 Ed 3.0 — IEC 61010-2-030:2017 Ed 2.0
IEC 61326-1:2012 Ed 2.0 — ETSI EN 301-489-1 v2.1.1
ETSI EN 301 489-52 v1.1.0 — ETSI EN 301 489-17 V3.1.1

Year of CE mark:

2016

(FR)

DÉCLARATION UE DE CONFORMITÉ

La présente déclaration de conformité est délivrée sous la responsabilité exclusive de CIRCUTOR dont l'adresse postale est **Vial Sant Jordi, s/n – 08232 Viladecavalls (Barcelone) Espagne**

Produit:

Analyseur portable triphasé

Série:

MYeBOX 150, MYeBOX 1500

Marque:

CIRCUTOR

L'objet de la déclaration est conforme à la législation d'harmonisation pertinente dans l'UE, à condition d'avoir été installé, entretenu et utilisé dans l'application pour laquelle il a été fabriqué, conformément aux normes d'installation applicables et aux instructions du fabricant

2014/30/EU: EMC Directive — 2014/35/EU: Low Voltage Directive
2014/53/EU: Radio Equipment Directive — 2015/863/EU: RoHS3 Directive

Il est en conformité avec la(les) suivante (s) norme(s) ou autre(s) document(s) réglementaire (s):

EN IEC 63000:2018
IEC 61010-1:2010+AMD1:2016 Ed 3.0 — IEC 61010-2-030:2017 Ed 2.0
IEC 61326-1:2012 Ed 2.0 — ETSI EN 301-489-1 v2.1.1
ETSI EN 301 489-52 v1.1.0 — ETSI EN 301 489-17 V3.1.1

Année de marquage « CE »:

2016

Viladecavalls (Spain), 10/6/2022
General Manager: Ferran Gil Torné

Circutor
NIF A-08513178
Vial Sant Jordi s/n.
08232 Viladecavalls
Barcelona (Spain)
t. +34 93 745 29 00

Circutor

CIRCUTOR, SA – Vial Sant Jordi, s/n
08232 Viladecavalls (Barcelona) Spain
(+34) 937 452 900 – info@circutor.com

(DE)

KONFORMITÄTSERKLÄRUNG UE

Vorliegende Konformitätserklärung wird unter alleiniger Verantwortung von CIRCUTOR mit der Anschrift, Vial Sant Jordi, s/n – 08232 Viladecavalls (Barcelona) Spanien, ausgestellt

Produkt:

tragbarer Dreiphasen-Analysator

Serie:

MYeBOX 150, MYeBOX 1500

Marke:

CIRCUTOR

Der Gegenstand der Konformitätserklärung ist konform mit der geltenden Gesetzgebung zur Harmonisierung der EU, sofern die Installation, Wartung und/Verwendung der Anwendung seinem Verwendungszweck entsprechend gemäß den geltenden Installationsstandards und der Vorgaben des Herstellers erfolgt.

2014/30/EU: EMC Directive — 2014/35/EU: Low Voltage Directive
2014/53/EU: Radio Equipment Directive — 2015/863/EU: RoHS3 Directive

Es besteht Konformität mit der/den folgenden/folgenden Norm/Normen oder sonstigem/sonstiger Regelwerk/Regelwerken

EN IEC 63000:2018
IEC 61010-1:2010+AMD1:2016 Ed 3.0 — IEC 61010-2-030:2017 Ed 2.0
IEC 61326-1:2012 Ed 2.0 — ETSI EN 301-489-1 v2.1.1
ETSI EN 301 489-52 v1.1.0 — ETSI EN 301 489-17 V3.1.1

Jahr der CE-Kennzeichnung:
2016

(PT)

DECLARAÇÃO DA UE DE CONFORMIDADE

A presente declaração de conformidade é expedida sob a exclusiva responsabilidade da CIRCUTOR com morada em
Vial Sant Jordi, s/n – 08232 Viladecavalls (Barcelona) Espanha

Producto:

Analisador portátels trifásico

Série:

MYeBOX 150, MYeBOX 1500

Marca:

CIRCUTOR

O objeto da declaração está conforme a legislação de harmonização pertinente na UE, sempre que seja instalado, mantido e utilizado na aplicação para a qual foi fabricado, de acordo com as normas de instalação aplicáveis e as instruções do fabricante.

2014/30/EU: EMC Directive — 2014/35/EU: Low Voltage Directive
2014/53/EU: Radio Equipment Directive — 2015/863/EU: RoHS3 Directive

Está em conformidade com a(s) seguinte(s) norma(s) ou outro(s) documento(s) normativo(s):

EN IEC 63000:2018
IEC 61010-1:2010+AMD1:2016 Ed 3.0 — IEC 61010-2-030:2017 Ed 2.0
IEC 61326-1:2012 Ed 2.0 — ETSI EN 301-489-1 v2.1.1
ETSI EN 301 489-52 v1.1.0 — ETSI EN 301 489-17 V3.1.1

Ano de marcação "CE":
2016

(IT)

DICHIARAZIONE DI CONFORMITÀ UE

La presente dichiarazione di conformità viene rilasciata sotto la responsabilità esclusiva di CIRCUTOR, con sede in
Vial Sant Jordi, s/n – 08232 Viladecavalls (Barcellona) Spagna

prodotto:

Analizzatore di reti portatile

Serie:

MYeBOX 150, MYeBOX 1500

MARCHIO:

CIRCUTOR

L'oggetto della dichiarazione è conforme alla pertinente normativa di armonizzazione dell'Unione Europea, a condizione che venga installato, mantenuto e utilizzato nell'ambito dell'applicazione per cui è stato prodotto, secondo le norme di installazione applicabili e le istruzioni del produttore.

2014/30/EU: EMC Directive — 2014/35/EU: Low Voltage Directive
2014/53/EU: Radio Equipment Directive — 2015/863/EU: RoHS3 Directive

È conforme alle seguenti normative o altri documenti normativi:

EN IEC 63000:2018
IEC 61010-1:2010+AMD1:2016 Ed 3.0 — IEC 61010-2-030:2017 Ed 2.0
IEC 61326-1:2012 Ed 2.0 — ETSI EN 301-489-1 v2.1.1
ETSI EN 301 489-52 v1.1.0 — ETSI EN 301 489-17 V3.1.1

Anno di marcatura "CE":
2016

Viladecavalls (Spain), 10/6/2022
General Manager: Ferran Gil Torné

Circutor
NIF A-08513178
Vial Sant Jordi s/n.
08232 Viladecavalls
Barcelona (Spain)
t. +34 93 745 29 00

Circutor

CIRCUTOR, SA – Vial Sant Jordi, s/n
08232 Viladecavalls (Barcelona) Spain
(+34) 937 452 900 – info@circutor.com

(PL)

DEKLARACJA ZGODNOŚCI UE

Niniejsza deklaracja zgodności zostaje wydana na wyłączną odpowiedzialność firmy CIRCUTOR z siedzibą pod adresem: **Vial Sant Jordi, s/n – 08232 Viladecavalls (Barcelona) Hiszpania**

produkt:

Przenośny analizator sieciowy

Seria:

MYeBOX 150, MYeBOX 1500

marka:

CIRCUTOR

Przedmiot deklaracji jest zgodny z odnośnymi wymaganiami prawodawstwa harmonizacyjnego w Unii Europejskiej pod warunkiem, że będzie instalowany, konserwowany i użytkowany zgodnie z przeznaczeniem, dla którego został wyprodukowany, zgodnie z mającymi zastosowanie normami dotyczącymi instalacji oraz instrukciami producenta

2014/30/EU: EMC Directive	2014/35/EU: Low Voltage Directive
2014/53/EU: Radio Equipment Directive	2015/863/EU: RoHS3 Directive

Jest zgodny z następującą(ymi) normą(ami) lub innym(i) dokumentem(ami) normatywnym(i):

EN IEC 63000:2018

IEC 61010-1:2010+AMD1:2016 Ed 3.0	IEC 61010-2-030:2017 Ed 2.0
IEC 61326-1:2012 Ed 2.0	ETSI EN 301-489-1 v2.1.1
ETSI EN 301 489-52 v1.1.0	ETSI EN 301 489-17 V3.1.1

Rok oznakowania "CE":

2016

Viladecavalls (Spain), 10/6/2022
General Manager: Ferran Gil Torné

Circutor
NIF A-08513178
Vial Sant Jordi s/n
08232 Viladecavalls
Barcelona (Spain)
t. +34 93 745 29 00

MiCOMLabs

Radio Equipment Directive 2014/53/EU

MiCOM Labs, Inc.: EU Notified Body Number 2280

EU-Type Examination Certificate

Certificate Number:	STCT476-1A	Rev: A	Date: 22th March 2017
Approval Holder Name:	Mary Meng Skylab M&C Technology Co., Ltd.		
Approval Holder Address	6 Floor, Building 9, Lijincheng Scientific&Technical park, Gongye East Road, Longhua District, Shenzhen, China		
Product Names(s):	2.4G Module		
Product Model(s):	SKW17		
Brand Name(s):	N/A		
Product Manufacturer:	Skylab M&C Technology Co., Ltd.		

Essential Requirement	Applicable Standards / Specifications
Safety Requirements	EN 60950-1: 2006+A11: 2009+A1: 2010+A12: 2011+A2: 2013 IEC 60950--1:2005 + A1:2009
EMC Requirements	EN 301 489-1 V 2.2.0 EN 301 489-17 V3.2.0
Radio Spectrum	EN 300 328 V2.1.1
RF Exposure Requirements	EN 62311:2008

The device shall be marked with the CE mark as shown in accordance with Articles 19 and 20 of the Radio Equipment Directive. (See Annex 2 of this document)

CE

Scope: This EU-Type Examination Certificate is given in respect of compliance of radio spectrum use Article 3 Paragraph 2 of the RED Directive 2014/53/EU. The scope of the evaluation and this certificate relates only to those items identified in "Annex 1 to EU-Type Examination Certificate" for the specific product and Certificate number referenced above.

EU Type Examination was performed according to Module B: EU-type examination procedure per Annex III the Directive on the essential requirements in Article 3, for the specific product and Certificate Number referenced above.

This EU Type Examination Certificate is based upon the review of the Technical Documentation and supporting evidence for the adequacy of the technical design solution, it is only valid in conjunction with the attached Annexes. The scope of this statement relates to a single sample of the apparatus identified above and of the submitted documents only.

Signed by; Gordon Hurst, President & CEO

CIRCUTOR S.A.U.
Vial Sant Jordi, s/n
08232 -Viladecavalls (Barcelona)
Tel.: (+34) 93 745 29 00 - Fax: (+34) 93 745 29 14
www.circutor.com central@circutor.com