FM3200 User Manual

V0.7

Contents

1 INTRODUCTION 4

1.1 ATTENTION 4
1.2 INSTRUCTIONS OF SAFETY 4
1.3 LEGAL NOTICE 5
1.4 ABOUT DOCUMENT 5

2 BASIC DESCRIPTION 6

2.1 PACKAGE CONTENTS 6
2.2 BASIC CHARACTERISTICS 6
2.3 MECHANICAL FEATURES 7
2.4 TECHNICAL INFORMATION: 8

3 CONNECTION, PINOUT, ACCESSORIES 9

3.1 SIM CARD INSERT SCHEME 9
3.2 INSTALLING FM3200 DRIVERS 10
3.3 NAVIGATE LED 12
3.4 MODEM LED 12
3.5 STATUS LED 12
3.6 SOCKET 2×3 12
3.7 USB 13
3.8 ACCESSORIES 13

4 FIRMWARE 16

5 OPERATIONAL BASICS 18

5.1 OPERATIONAL PRINCIPALS 18
5.2 SLEEP MODE 18
5.3 VIRTUAL ODOMETER 18

6 CONFIGURATION 19

6.1 CONFIGURATOR 19
6.2 SYSTEM SETTINGS 20
6.3 GPS SETTINGS 20
6.4 GEOFENCE SETTINGS 22
6.5 GSM SETTINGS 23
6.6 GPRS SETTINGS 23
6.7 SMS SETTINGS 23
6.8 SEND PARAMETER SETTINGS 24
6.9 I/O SETTINGS 25
6.9.1 Monitoring 26
6.9.2 Event Generating 27
6.9.3 Hysteresis 27

7 SMS COMMAND LIST 29

7.1 SMS SETTINGS FOR FM3200 29
7.2 SMS COMMAND LIST 29
getstatus 30
getweektime 31
getops 31
getcfgtime 31
getgps 31
getver 31
getinfo 32
getio 32
readio # 32
setdigout ## 32
getparam #### 32
setparam #### # 33
flush #,#,#,#,#,#,# 33

8 DEBUG MODE 34

9 PARAMETER LIST 35

9.1 GLOBAL PARAMETERS 35
Record search (ID=105) 35
Link timeout (ID=107) 35
9.2 DATA ACQUISITION AND SENDING PARAMETERS 35
Time based acquire interval (ID=11) 35
Distance based acquire interval (ID=12) 35
Angle based coordinate acquisition (ID=13) 35
Data Send interval (ID=270) 36
Minimum records number in packet (ID=232) 36
GPRS Enable (ID=240) 36
GSM Operator list (ID=271) 36
GPRS Data send week time schedule (ID=272) 37
SMS Data send week time schedule (ID=273) 37
SMS Data send allow (ID=250) 37
24 Records time step (ID=274) 37
9.3 SECURITY SETTINGS AND PARAMETERS 38
SMS User login (ID=252) 38
SMS User password (ID=253) 38
Server Number (ID=260) 38
Authorized Number #1 (ID=261) 38
9.4 GPRS ACCESS AND ADDRESS SETTINGS 39
APN Name (ID=242) 39
APN username (ID=243) 39
APN Password (ID=244) 39
Data send protocol (ID=231) 39
Server IP address (ID=245) 39
Server port number (ID=246) 39
9.5 GEOFENCE ZONES SETTINGS AND PARAMETERS 40
GeoFence border width (ID=20) 40
GeoFence Zone #1 Configuration Parameter (ID=30) 40
GeoFence x1 (ID=31) 40
GeoFence y1 (ID=32) 40
GeoFence x2 (ID=33) 41
GeoFence y2 (ID=34) 41
All the rest zones 41
9.6 SYSTEM PARAMETERS 41
Sleep mode (ID=000) 41
GPS Enable (ID=10) 41
9.7 IO PROPERTIES 42
IO#1 property parameter (ID=300) 42
IO#1 priority (ID=301) 42
IO#1 High level (ID=302) 42
IO#1 Low level (ID=303) 42
IO#1 logic operand (ID=304) 43
IO#1 averaging length (ID=305) 43

10 MOUNTING RECOMMENDATIONS 44

10.1 CONNECTING WIRES 44
10.2 CONNECTING POWER SOURCE 44
10.3 CONNECTING IGNITION WIRE 44
10.4 CONNECTING GROUND WIRE 44
10.5 CONNECTING ANTENNAS 44
10.6 MODULE INSTALLATION 45

11 CHANGE LOG 46

1 INTRODUCTION

1.1 Attention

Do not disassemble the device. If the device is damaged, the power supply cables are not isolated or the isolation is damaged, before unplugging the power supply, do not touch the device.

All wireless data transferring devices produce interference that may affect other devices which are placed nearby.

The device must be connected only by qualified personnel.

The device must be firmly fastened in the predefined location.

The programming must be performed using a second class PC (with autonomic power supply).

The device is susceptible to water and humidity.

Warning! If wrong accumulator is used, the device may explode!

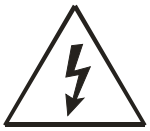

Any installation and/or handling during a lightning storm is prohibited.

FM3200 has USB interface;
Please use cables provided with FM3200 device.
Teltonika is not responsible for any harm caused by using wrong cables for PC <-> FM3200 connection.

Attention! Internal battery must be plugged in, in order for FM3200 to work from backup battery.

1.2 Instructions of safety

This chapter contains information on how to operate FM3200 safely. By following these requirements and recommendations, you will avoid dangerous situations. You must read these instructions carefully and follow them strictly before operating the device!

The device uses a 10 V...30 V DC power supply. The nominal voltage is 24 V DC. The allowed range of voltage is 10 V...30 V DC, power – not more than 12 W.

To avoid mechanical damage, it is advised to transport the FM3200 device in an impact-proof package. Before usage, the device should be placed so that its LED indicators are visible, which show the status of operation the device is in.

When connecting the connection (1x6) cables to the vehicle, the appropriate jumpers of the power supply of the vehicle should be disconnected.

Before dismounting the device from the vehicle, the 1x6 connection must be disconnected.

The device is designed to be mounted in a zone of limited access, which is inaccessible for the operator. All related devices must meet the requirements of standard EN 60950-1.
The device FM3200 is not designed as a navigational device for boats.

1.3 Legal Notice

Copyright © 2008 Teltonika. All rights reserved. Reproduction, transfer, distribution or storage of part or all of the contents in this document in any form without the prior written permission of Teltonika is prohibited.

Other products and company names mentioned here may be trademarks or trade names of their respective owners.

1.4 About document

This document contains information about the architecture, possibilities, mechanical characteristics, and configuration of the FM3200 device.
Acronyms and terms used in document

- PC – Personal Computer.
- GPRS – General Packet Radio Service.
- GPS – Global Positioning System.
- GSM – Global System for Mobile Communications.
- SMS – Short Message Service.
- AC/DC – Alternating Current/Direct Current.
- Record – AVL data stored in FM3200 memory. AVL data contains GPS and I/O information
- AVL packet - Data packet that is being sent to server during data transmission. AVL packet contains from 1 to 30 records.

2 BASIC DESCRIPTION

FM3200 is a terminal with GPS and GSM connectivity, which is able to determine the object's coordinates and transfer them via the GSM network. This device is perfectly suitable for applications, which need location acquirement of remote objects. It is important to mention that FM3200 has additional inputs and outputs, which let you control and monitor other devices on remote objects. FM3200 also has a USB port for NMEA output and configuration.

2.1 Package contents

The FM3200 device is supplied to the customer in a cardboard box containing all the equipment that is necessary for operation. The package contains:

- The FM3200 device.
- Input and output power supply cable with a 1x6 connection pins.
- GPS antenna
- USB cable

2.2 Basic characteristics

GSM / GPRS features:

- Teltonika TM1 dual band module (900/1800 MHz)
- GPRS class 10
- SMS (text, data)

GPS features:

- 50 channel receiver
- NMEA, GGA, GGL, GSA, GSV, RMC, WGS-84 protocol compatible
- -160 dBm sensitivity (earlier versions)
- Skytraq (Venus634LPx chipset), -161 dBm sensitivity (newer versions)

Hardware features:

- ARM7 TDMI processor
- 1 MB internal Flash memory
- Built-in movement sensor
- Internal backup battery included

Interface features:

- Power supply: 10 ÷ 30V
- USB port
- 2 digital inputs
- 2 open collector outputs
- 3 status LEDs

Special features:

- Any element event triggers (external sensor, input, speed, temperature, etc.)
- Highly configurable data acquisition and sending
- Multiple Geofence areas
- Sleep mode

- Real-time process monitoring
- Authorized number list for remote access
- Firmware update over GPRS or USB port
- Configuration update over GPRS, SMS or USB port
- TCP/IP or UDP/IP protocol support
- 15000 record storing
- CE and E-mark certified

2.3 Mechanical features

Part name	Physical specification
Navigation LED	LED
Status LED	LED
Modem LED	LED
GPS	GPS antenna connector MCX
Socket 2×10	Tyco Multi-Lock I/O MK-II C-175975
USB	Mini USB socket

Technical details
Power supply 10...30 V DC 12 W Max Energy consumption: GPRS: ⎓ 200 mA r.m.s Max., Sleep: ⎓ 36 mA r.m.s. Operation temperature: -25°C ... +55°C Storage temperature: -40°C ... +70°C Storage relative humidity 5 ... 95 % (non condensation)

Figure 1. FM3200 specifications

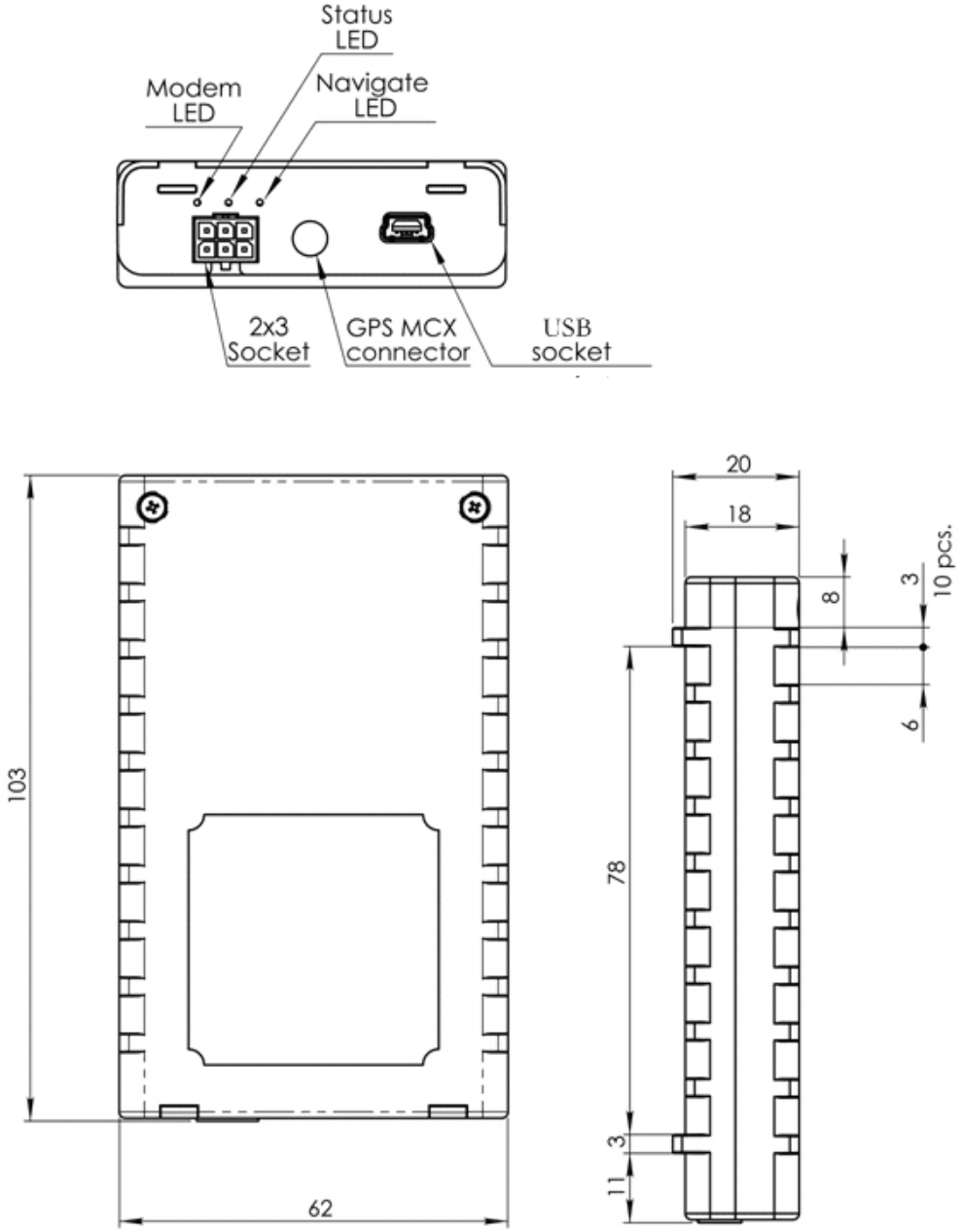

Figure 2. FM3200 view & dimensions

2.4 Technical information:

FM3200 operating time with internal backup battery depends on temperature, data sending frequency (SMS and GPRS), and accumulator age, number of charge/discharge cycles.

For example:

- In sleep mode a new FM3200 device's operating time is approximately 3 h 30 min;
- Operating time for a new FM3200 device, working in normal mode (records are being acquired every 10 sec and sent in packets of 4 records every 60 sec), is approximately 2 h.

Attention! Internal battery must be plugged in, in order for FM3200 to work from backup battery.

3 CONNECTION, PINOUT, ACCESSORIES

3.1 SIM card insert scheme

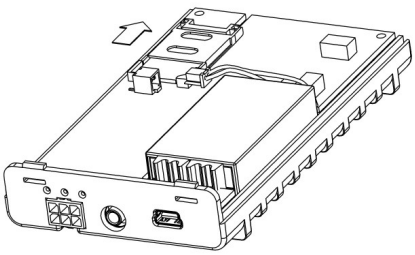

①

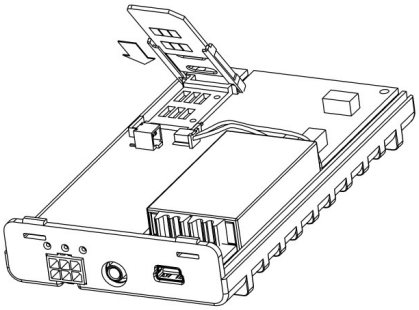

②

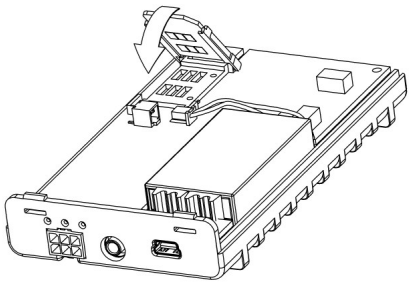

③

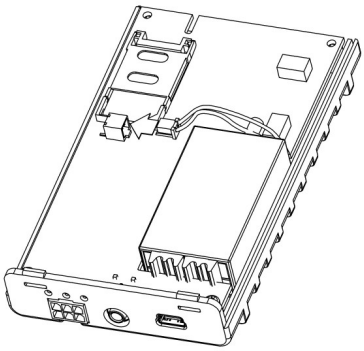

④

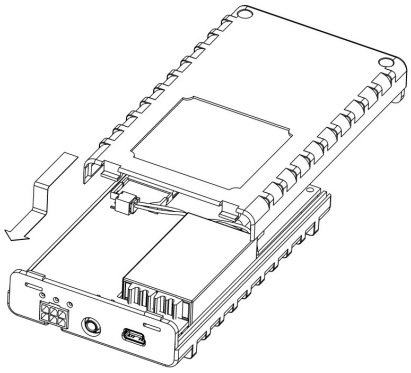

⑤

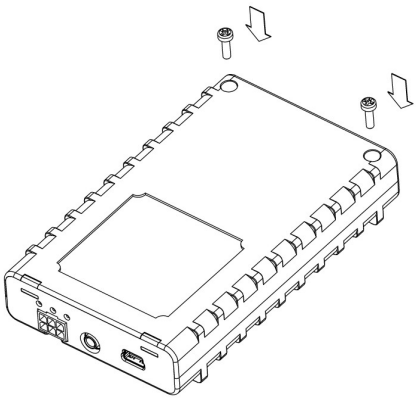

⑥

①	Open the SIM holder.
②	Insert the SIM card as shown.
③	Close the SIM holder
④	Plug in the backup battery
⑤	Assemble device with enclosure's top part as shown
⑥	Screw the bolts.

3.2 Installing FM3200 drivers

In order to configure FM3200, "MS Windows XP Service Pack 2" or later version of MS Windows must be installed.

"MS Windows XP SP2"

Before connecting FM3200 to the computer, the special Hot Fixes must be installed:

1) Hotfix KB918365 (usbser.sys 5.1.2600.2930);
2) Hotfix KB935892 (usbccgp.sys 5.1.2600.3116).

After installing the HotFixes, reboot your PC.

Power up the FM3200 and connect it to the computer. "Found New Hardware Wizard" for "FM32XX Port" will appear. Choose "Install from a list or specific location" (Figure 3) and press "Next".

Figure 3. FM3200 installation step 1

In the new window, choose "Search for the best driver in these locations" and check the "Include this location in the search" box. Then click browse and specify the location of the "FM22XX.inf" file, it can be downloaded from http://avl1.teltonika.lt/Downloads/FM22/FM22XX.zip. Click "Next".

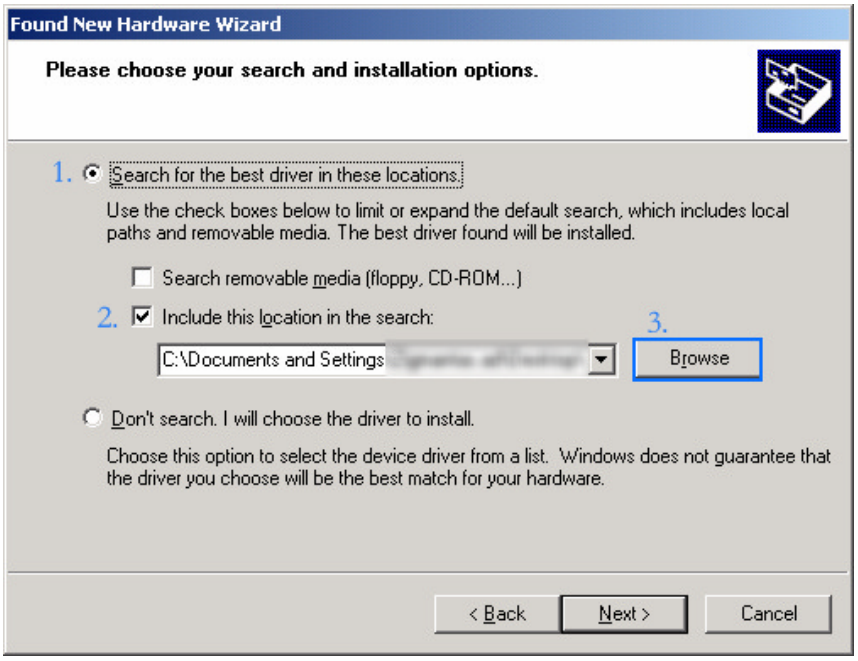

Figure 4. FM3200 installation step 2

The warning window will appear, click "Continue Anyway".

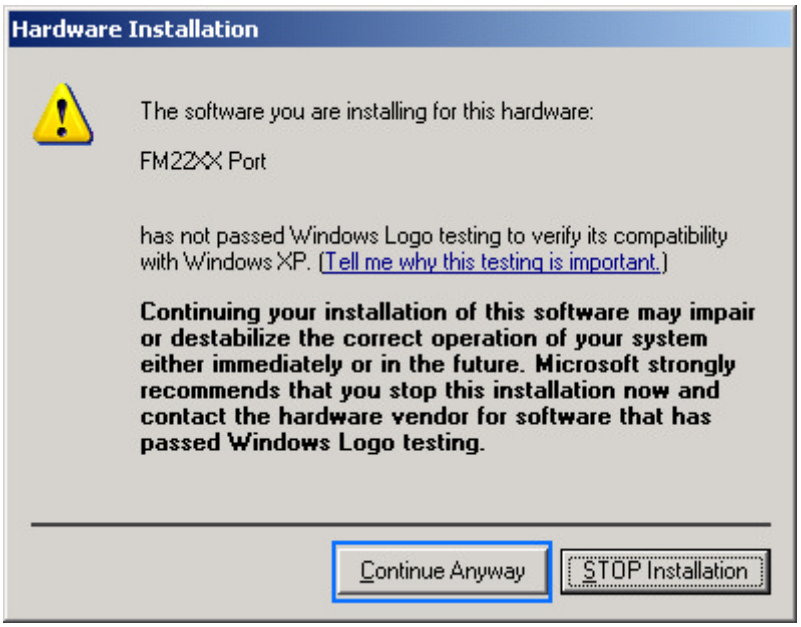

Figure 5. FM3200 installation step 3

Click "Finish".

The installation of "FM22XX Port" is completed. Immediately after the end of the installation, the new wizard for "FM22XX GPS" will appear. Repeat all the steps as in previous installation.

"MS Windows XP SP3" and "MS Windows Vista"

No HotFix installation is required. Proceed with the installation of "FM22XX Port" and "FM22XX GPS".

3.3 Navigate LED

When GPS signal is not received, the Navigation LED is switched on permanently.
When GPS signal is received, the Navigation LED blinks every second:
When FM32XX is operating in Sleep mode Navigation LED is off.
If Navigation LED blinks every 11 seconds, that means GPS antenna or connector is short circuited.
OR
If the GPS module is **Skytraq**, it will be ON permanently.
When Navigation LED is off, that means:

a. Short circuit occurred in GPS antenna or connector.
OR

GPS is turned OFF (SLEEP mode)

3.4 Modem LED

When power is connected to FM3200, modem led is switched on permanently.

3.5 Status LED

When device has uploaded firmware – Status LED should blink. If LED does not blink – it means that device does not function.

3.6 Socket 2×3

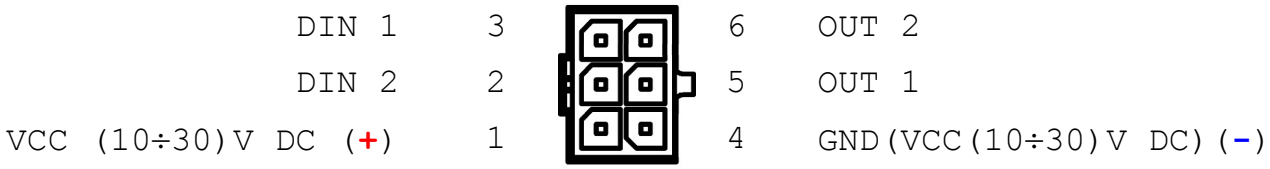

Figure 6. 2×3 socket pinout

Pin Nr.	Pin Name	Description
1	*2*	*3*
1	VCC (10÷30)V DC (+)	Power supply for module. Power supply range (10...30) V DC Energy consumption: GPRS: ⎓ 200 mA r.m.s Max., Nominal: ⎓ 65 mA r.m.s..
2	DIN 1	Digital input, channel 1*
3	DIN 2	Digital input, channel 2*
4	GND(VCC(10÷30)V DC) (-)	Ground pin. (10÷30)V DC (-)
5	OUT 1	Digital output. Channel 1. Open collector output. Max. ⎓ 150mA.
6	OUT 2	Digital output. Channel 2. Open collector output. Max. ⎓ 150mA.

Figure 7. Socket 1x6 pinout description. *- digital input status 0 … ~2 V – FALSE; ~2,5 V… 30 V– TRUE

3.7 USB

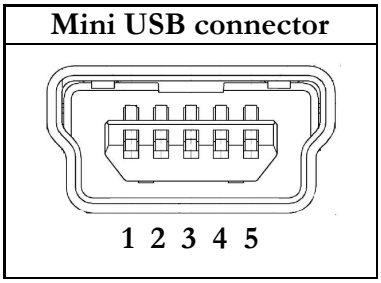

Figure 8. Mini USB connector

FM3200 has USB interface; it has Mini USB connector type.

FM3200 creates two COM-Ports: "FM32XX Port", which can be used as system port (to flash firmware and configure the device) and "FM32XX GPS" as GPS NMEA 0183 output at 9600 baud rate.

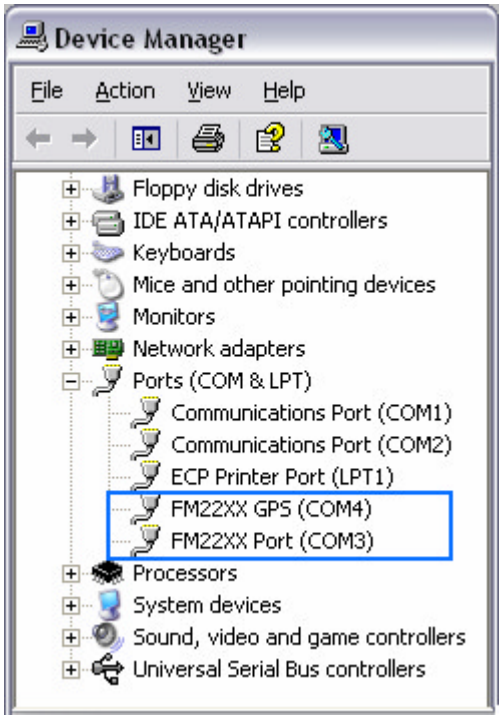

Figure 9. COM-Ports

3.8 Accessories

Note: Teltonika does not provide any additional equipment like panic buttons, door sensors or others.

Alarm buttons, door sensors, etc.

Alarm buttons, door sensors, ignition, etc. return two states: high or low voltage. Digital inputs are used to read this information. Figure below shows how to connect alarm button, door sensor, etc.

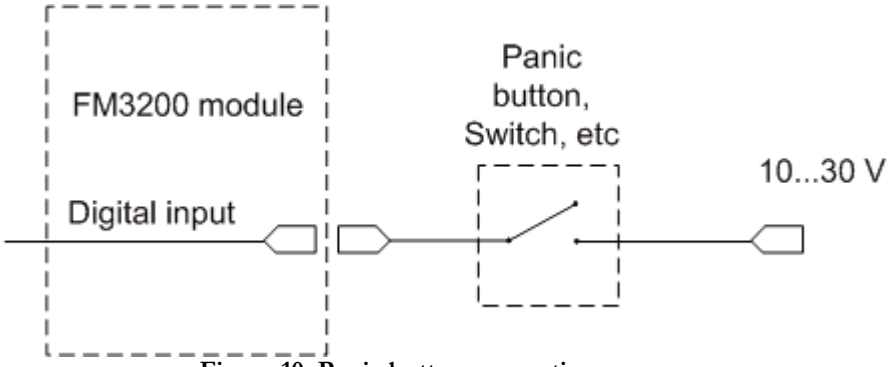

Figure 10. Panic button connection

In cases when sensor output signal is negative, an additional relay has to be installed to convert negative signal to positive.

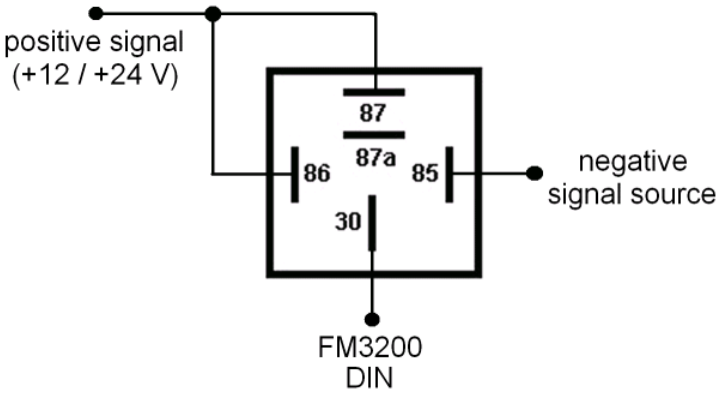

Figure 11. Inverting relay connection

Immobilizer relay

When connected as shown below, FM3200 disables engine starter when output is ON. More details about relays can be found below.

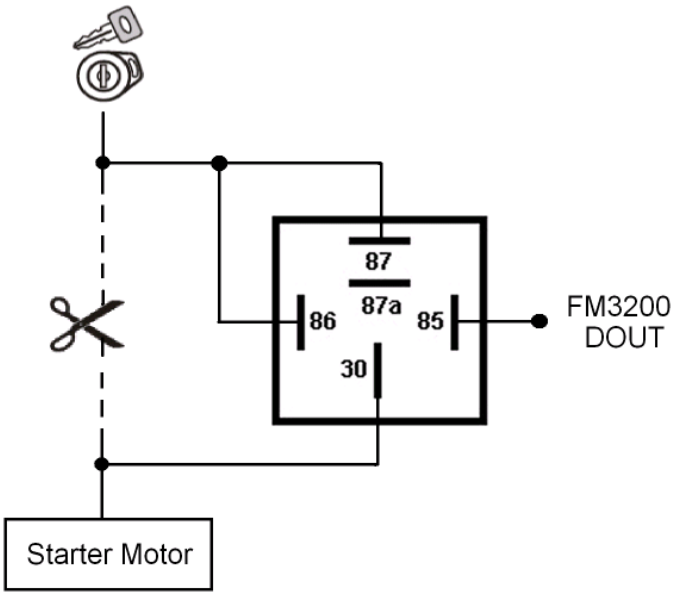

Figure 12. Immobilizer relay connection

Relays

A simple automotive relay is used to invert input signal or to immobilize engine starter. Note, that they are available as 12 V or 24 V.

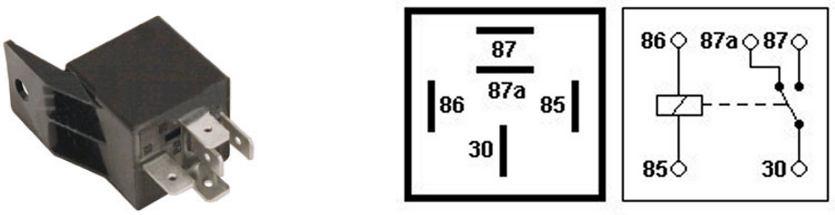

Figure 13. Automotive relay pinout

4 FIRMWARE

Updating firmware using USB cable

FM3200 is powered with smart firmware. FM3200 functionality is always improving, new firmware versions appear. Current module firmware version can be retrieved from configurator. See configuration description for details.

Contact sales manager to get the latest firmware.

Updater is needed to update the firmware. It can be downloaded from:

http://avl1.teltonika.lt/downloads/FM32/Updater%201.0.0.4.zip

Firmware must to be copied to Updater directory.

Connect FM3200 to PC with USB cable. Launch "FM Updater", select COM port, click connect and update. Update process may take several minutes.

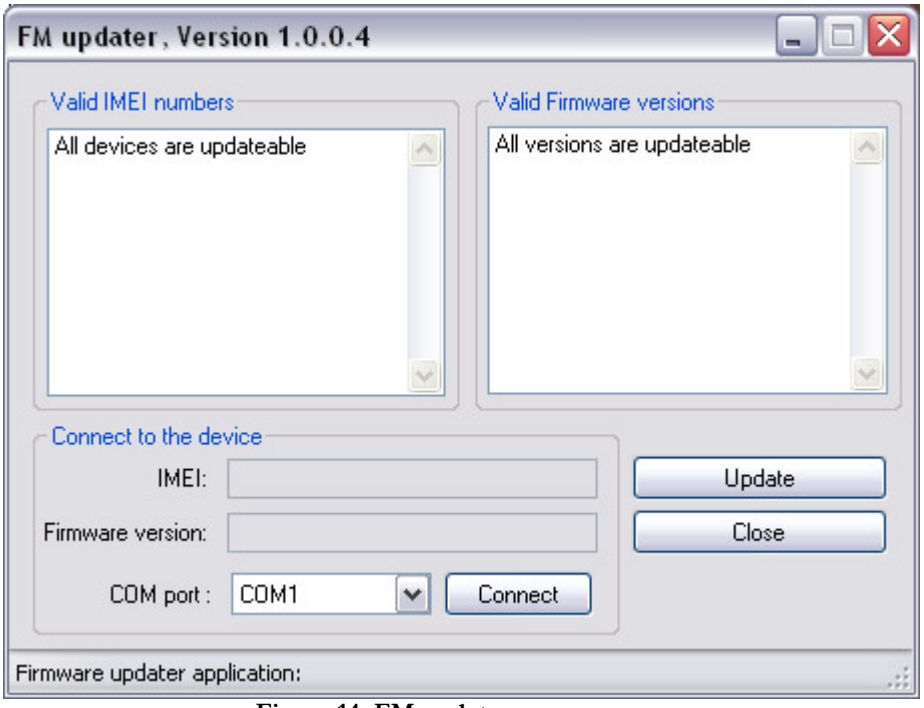

Figure 14. FM updater screen

Updating firmware via GPRS

Firmware can also be updated by RILS system over GPRS.

RILS stands for Remote Imlet Loading System, which is used to update FM3200 ARM processor firmware. In order to update firmware, server sends a SMS to the FM3200 and directs it to connect to the server and download new firmware. The special web interface is used for this operation. Address of the web application is: http://212.47.99.62:5002/RILS-web/.

For RILS login and password please contact your sales manager.

After logging in click on 'Upload FM4', click Browse near 'Upload new firmware:', select FM3200 firmware file from hard disk, click OK and then Upload. Select uploaded firmware from the list (last one) and click next. Enter necessary parameters in the fields:

1. Server IP: 212.47.99.62
2. Server port: 5009
3. Module number is GSM number of FM SIM in worldwide standard, for example: *+37069912345*.

Enter your APN, APN (chap) login and password. After entering all parameters, click 'Add Module'. To operate multiple devices, enter new IMEI and GSM number and click 'Add Module' again. Otherwise click 'Next' and if all data is correct, in next window click 'Upload'.

5 OPERATIONAL BASICS

5.1 Operational principals

FM3200 module is designed to acquire records and send them to the server. Records contain GPS and I/O information. Module uses GPS receiver to acquire GPS data and is powered with three data acquire methods: time-based, distance-based and angle-based method. Method's details are described in GPS section. All data is stored in flash memory and later can be sent via GPRS or SMS channels. GPRS mode is most preferred data sending mode. SMS mode is mostly used in areas without GPRS coverage or GPRS usage is too expensive.

GPRS and SMS settings are described in GPRS section. FM3200 communicates with server using special data protocol. Data protocol is described in "FM4100 FM2100 and FM2200 Protocols" document.

FM3200 can be managed by SMS commands. SMS Command list is described in SMS COMMAND LIST section. Module configuration can be performed over TCP or via SMS. Configuration parameters and modes are described in "FM4100 FM2100 and FM2200 Protocols" document.

5.2 Sleep mode

FM3200 can enter sleep mode (standby mode) under two conditions:

- FM3200 does not detect movement.
- FM3200 does not send or receive any data for 5 minutes. This means that if coordinate recording interval is less than 5 minutes, FM3200 will never go to sleep mode.

FM3200 exits sleep mode when it detects movement again.

While in sleep mode, FM3200 sets GPS receiver to sleep mode, therefore it does not record or send any data. The power usage also decreases saving vehicle's battery.

5.3 Virtual odometer

Virtual odometer is used to calculate traveled distance in FM3200 as a separate I/O element. When FM3200 detects movement, it starts counting distance using GPS signal: every second it checks current location and calculates distance between current and previous point. It keeps adding these intervals until it is time to make a record, then FM3200 records its location and adds odometer value, which is equal to the sum of all distances, measured every second. When record is made, odometer resets to zero and distance calculation starts all over again. Note, that FM3200 does not measure distance between coordinates, that it records using time, distance or angle change intervals. Instead, it uses virtual points, which are established every second, and calculates distance between them.

6 CONFIGURATION

6.1 Configurator

New FM3200 module has default factory settings. Settings should be changed according to your application and your GSM operator information.

FM3200 configuration is performed via FM3200 Configurator program. Latest FM3200 Configurator version can be downloaded from http://avl1.teltonika.lt/downloads/FM32/. FM3200 configurator operates on Microsoft Windows OS and uses MS .Net Framework 2.0 or higher. Please ensure that MS .Net Framework 2.0 or later is installed on your PC before starting configurator. Latest MS .Net Framework version can be downloaded from official Microsoft web page.

Module configuration is performed over USB cable. Configuration process starts from loading FM3200 Configurator program and selecting COM port.

FM3200 has one user editable profile stored in Flash no. 1 memory and one extra profile stored in Flash no. 0, which cannot be edited by the user. Profile from Flash no. 0 is used by system and cannot be selected as active, while profile from Flash no. 1 is fully editable and can be selected as active.

Changes of profile parameters must be saved to FM3200 Flash no. 1.

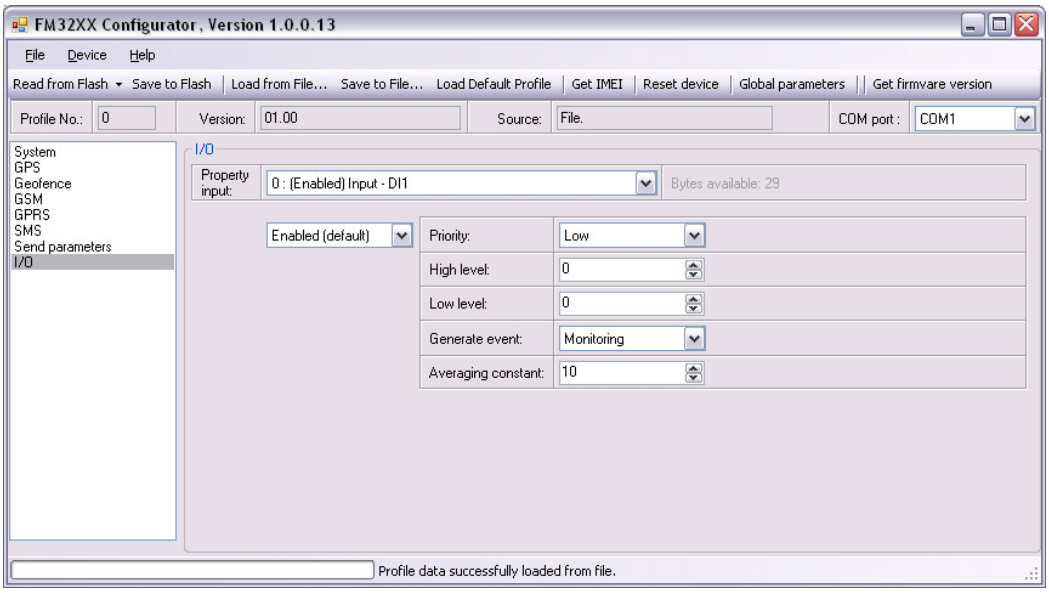

Figure 15. Configurator window

'Read from Flash' – reads configuration parameters from Flash memory.

'Save to Flash' – saves configuration parameters to Flash memory.

'Load from file' – allows user to load configuration saved in .XML extension file.

'Save to file' – allows user to save currently entered settings to a file.

'Load default profile' – loads default FM3200 settings that later can be modified. This procedure must be performed before entering new parameters.

'Get IMEI' – reads FM3200 IMEI number. This number is unique for every FM3200 and usually servers recognize different devices by this number.

'Reset device' – reboots FM3200 and displays processor firmware version.

'Load CPU FW via PORT ½' – updates the firmware version.

6.2 System settings

System settings menu has only one parameter – Sleep mode. It can be enabled or disabled by turning it on or off. See sleep mode description for more details.

6.3 GPS settings

GPS settings define GPS data acquiring methods and frequencies.

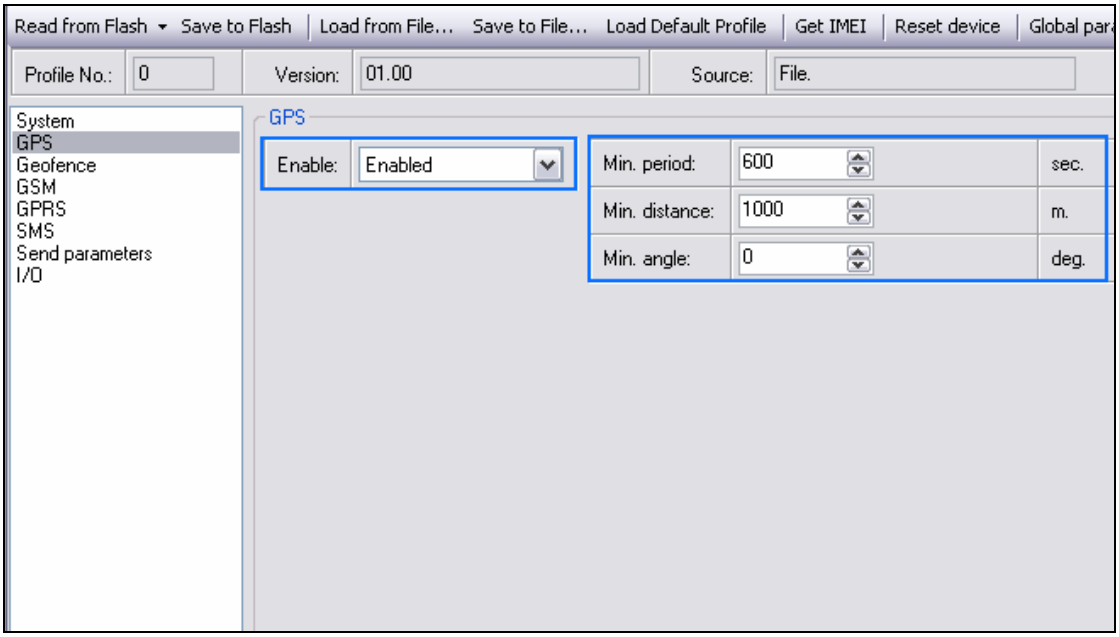

Figure 16. GPS configuration

Device is checking if the time between last saved record and current time is equal or higher than Time based acquire interval. If so, FM saves record to memory. If not, FM checks if the distance from last record to current record is equal or higher than Distance based acquire interval. If so, saves the record to memory. If not and speed is higher than 10km/h, then FM is checking if angle difference between last record and current record is equal or higher than Angle based acquire value. If so, saves the record to memory. This check is being performed every second.

FM3200 is able to collect records using three methods at the same time: time, distance and angle based data acquisition:

Time based data acquiring (Min. period) – records are being acquired every time when defined interval of time passes. Entering zero means that data will be recorded as fast as possible (every second).

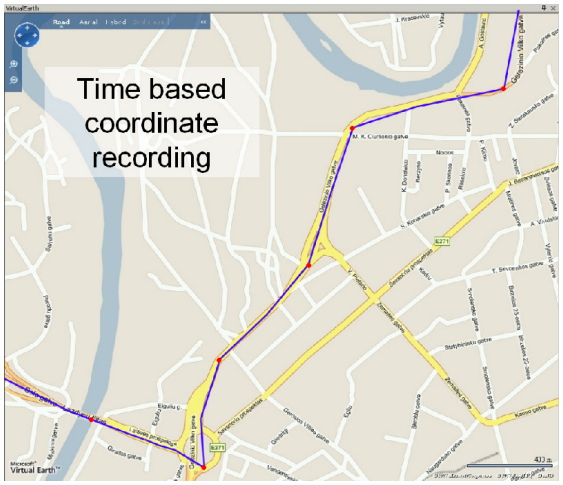

Distance based data acquiring (Min. distance) - records are being acquired when the distance between previous coordinate and current position is greater than defined parameter value. Entering zero means that data will be recorded every 0 meters (as fast as possible – every second).

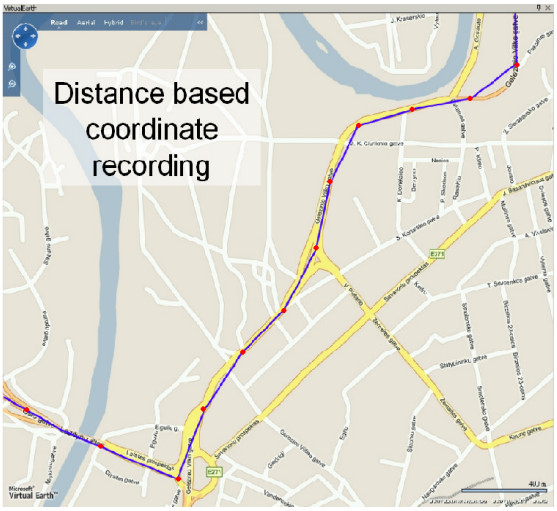

Angle based data acquiring (Min. angle) – records are being acquired when angle difference between last recorded coordinate and current position is greater than defined value. Entering zero disables data acquisition depending on angle.

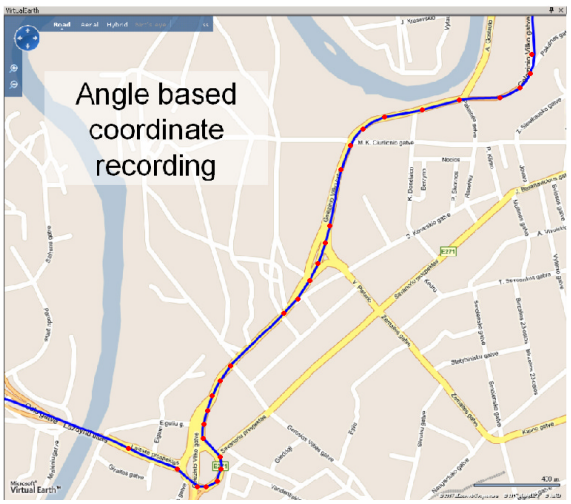

6.4 Geofence settings

FM3200 has 5 configurable Geofence zones and it can generate event when defined Geofence zone border is crossed.

- Frame border – frame border is an additional border around Geofence zone. It is additional area around defined zone used to prevent false event recording when object stops on the border of the area and because of GPS errors some records are made inside area and some – outside. Event is generated only when both borders are crossed. See figure for details: track 1 is considered to enter the area while track 2 does not.

Figure 17. Geofence border

- Shape – can be rectangular or circle
- Priority – priority of Geofence event: low, high or panic. These levels define priority of event information sending to server. See I/O element description for more details about priorities.
- Enter event – enable or disable zone entering event
- Exit event – enable or disable zone leaving event
- X1 – geofence zone left bottom corner X coordinate
- Y1 – geofence zone left bottom corner Y coordinate
- X2 or R – geofence zone upper right corner X coordinate (radius of circle when Circular zone used)
- Y2 – geofence zone upper right corner Y coordinate

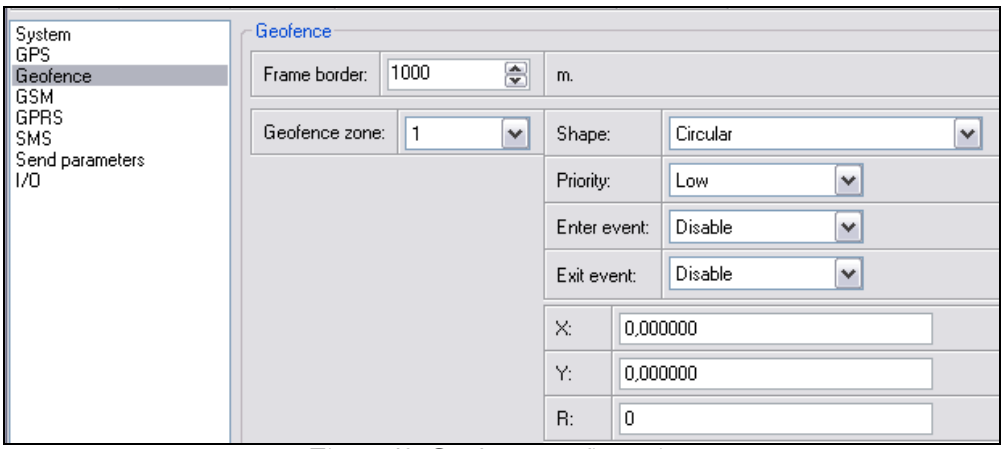

Figure 18. Geofence configuration

6.5 GSM settings

'GSM Settings' allows to set protocol used for data transfers – TCP or UDP. 'Min Saved Records' defines minimum number of coordinates and I/O data that should be transferred with one connection to server. If FM3200 does not have enough coordinates to send to server, it will check again after time interval defined in 'Sending Period' (see below).

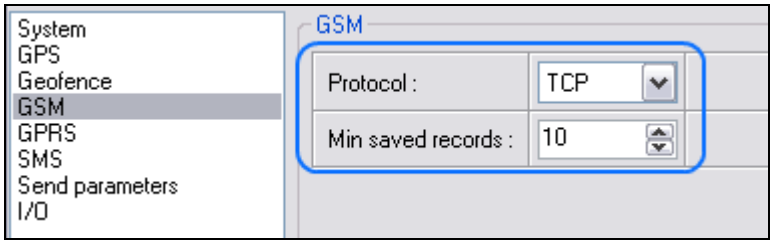

Figure 19. GSM configuration

6.6 GPRS settings

'GPRS Settings' define two main parameters for FM3200: GSM operator APN and GPRS username and password (optional – depending on operator), and destination server IP and port.

Some operators use specific authentification for GPRS session – CHAP or PAP. If any of these is used, APN should be entered as '`<APN>:c`' or '`<APN>:p`'.

I.e. if operator is using APN 'internet' with CHAP authentification, it should be entered as '`internet:c`'.

Information about APN and authentification type should be provided by your GSM operator.

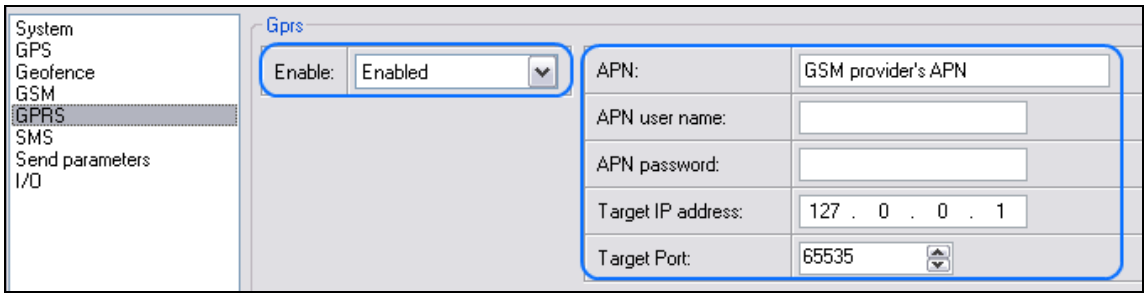

Figure 20. GPRS configuration

6.7 SMS settings

- SMS data send – enable or disable periodic data and event SMS use. Note, that this does not affect replies to messages – they are always sent to sender number.
- SMS send timeout – SMS send timeout (recommended 60 sec.)
- SMS Login – module login for SMS
- SMS Password – module password for SMS
- Server phone number – authorized server phone number for SMS requests, configuration, 24-coordinates and event binary SMS
- Authorized phone numbers – other authorized numbers that are allowed to control FM3200 remotely

Module login and password, server and authorised number list is used to protect FM3200 module from unauthorised access. Module accepts messages only from a list of authorised numbers and with proper module login and password. Numbers must be without "+" or "00" prefix. If no authorised numbers are entered, module accepts messages from all numbers. Server phone number automatically counts as authorised number.

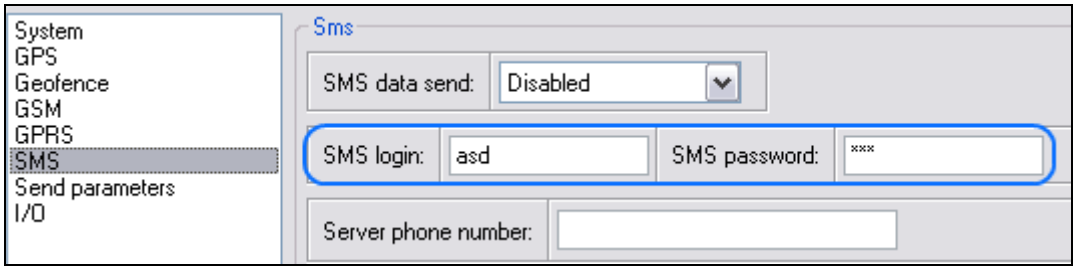

Figure 21. SMS configuration

6.8 Send Parameter settings

Send parameters window allows to set GPRS and SMS data send periods, sending schedules, set allowed operator list.

- Send period – GPRS data sending to server period. Module makes attempts to send collected data to server every defined period. If it does not have enough records (depends on parameter Min. Saved Records described above), it tries again after defined time interval
- Time step – FM3200 is improved with 24-coordinates-in-one-SMS sending mechanism. 24-coordinates-in-one-SMS mechanism is used in areas where no GPRS coverage is available. Module collects data and sends to server binary SMS containing information about last 24 collected points with interval between them defined in time step field. SMS sending schedule is set in SMS Week Time tab. 24-Coordinates SMS decoding is described in "FM4100 FM2100 and FM2200 Protocols" document.
- GPRS Context Week Time tab – most GSM billing systems charge number of bytes (kilobytes) transmitted per session. During the session, FM3200 makes connection and transmits data to a server. FM3200 tries to handle session as much as possible. Session can last hours, days, weeks or session can be closed after every connection in certain GSM networks – this depends on GSM network provider. GPRS Context Week Time defines session re-establish schedule if session was closed by network. New GPRS context is opened if time is 10 minutes till time checked in table. Therefore if all boxes are checked, FM3200 is able to open new connection anytime. At scheduled time match FM3200 checks for GPRS session activity. If GPRS session is alive, FM3200 sends data to server according to Send period parameter. If it is not, FM3200 checks if it is able to re-establish the session.
- SMS Week Time tab – week time allows setting SMS data sending schedule. SMS mode is mostly used in areas where GPRS is not available.

Note FM3200 operates GMT time without daylight saving.

- Operators list – FM3200 is able to use GPRS with all operators, but if at least one operator is entered in the list, FM3200 is allowed to connect to GPRS only while operating in listed operator's network.

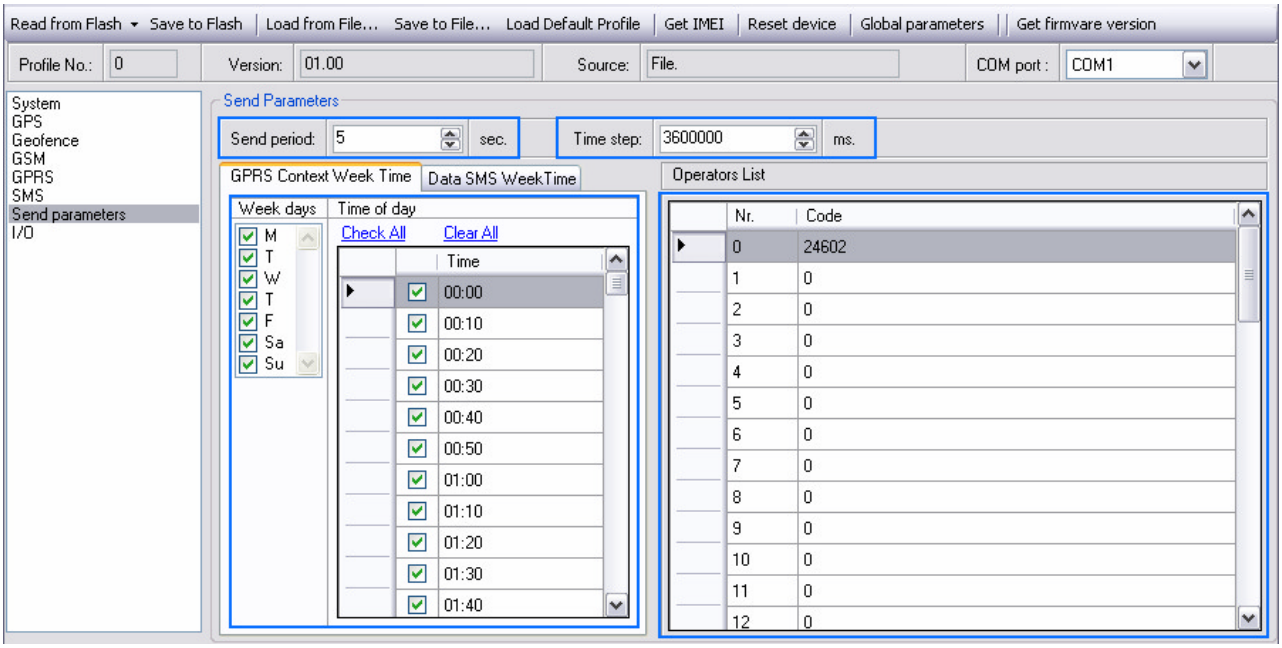

Figure 22. Send Parameters configuration

6.9 I/O settings

When no I/O element is enabled, AVL packet comes with GPS information only. After enabling I/O element(s) AVL packet in couple with GPS information contains current value(s) of enabled I/O element.

Property ID	Property Name	Bytes	Description
1	Digital Input Status 1	1	Logic: 0 / 1
2	Digital Input Status 2	1	Logic: 0 / 1
24	Speedometer	2	Value in km/h
66	External Power Voltage	2	Voltage: mV
67	Battery Voltage	2	Voltage: mV
68	Battery Current	2	Battery charge current: mA; 0 – if external power off
69	GPS Power	1	GPS antenna states: 0 – short circuit, 1 – connected
70	PCB Temperature	2	10 * Degrees (°C)
155	Geozone 01	1	Event: 0 – target left zone, 1 – target entered zone
156	Geozone 02	1	Event: 0 – target left zone, 1 – target entered zone
157	Geozone 03	1	Event: 0 – target left zone, 1 – target entered zone
158	Geozone 04	1	Event: 0 – target left zone, 1 – target entered zone
159	Geozone 05	1	Event: 0 – target left zone, 1 – target entered zone
199	Virtual Odometer	4	Distance between two records: m
240	Movement	1	0 – not moving, 1 – moving.
179	Digital output 1 state	1	Logic: 0 / 1
180	Digital output 2 state	1	Logic: 0 / 1
181	PDOP	2	Probability * 10; 0-500
182	HDOP	2	Probability * 10; 0-500
241	Current Operator Code	4	Currently used GSM Operator code

There are two types of operations with I/O elements: simple monitoring and event generating. Monitoring method is used when current I/O information needed with regular GPS coordinates. Event generating method is used when additional AVL packet is needed when current value of I/O exceeds predefined High and Low levels. I/O settings allow defining I/O event criteria.

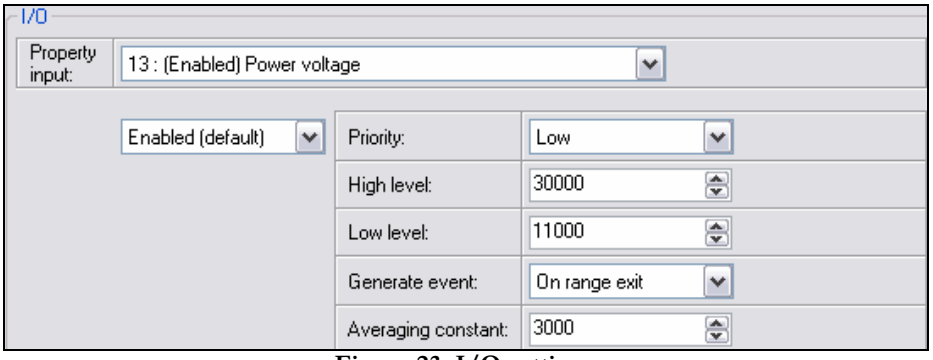

Figure 23. I/O settings

- Enabled or disabled field – allows enabling I/O element so it is added to the data packet and is sent to the server. By default all I/O element are disabled and FM3200 records only GPS coordinates.
- Priority – AVL packet priority – low, high or panic. Regular packets are sent as Low priority records. When low priority event is triggered, FM3200 makes additional record with indication that the reason for that was IO element change. When High priority is selected, module makes additional record with high priority flag and sends event packet immediately to the server by GPRS. Panic priority triggers same actions as high priority, but if GPRS fails, it sends AVL packet using SMS mode if SMS is enabled in SMS settings.
- High and Low levels – define I/O value range. If I/O value enters or exits this range, FM3200 generates event. "Generate event" parameter defines when to generate event – when value enters defined range, exits it or both.
- Averaging constant – it is an I/O event delay parameter. In some applications there is no need to generate events on every I/O range enter/exit immediately. Sometimes it is necessary to wait some time interval before event generating. Averaging constant allows to set I/O event delay (averaging). If I/O value is entering or leaving predefined range, it must have same value for Averaging constant time. 1 Averaging constant value equals 20 milliseconds.

Note: I/O element's "Movement sensor", Averaging constant is interpreted as Start Move Timeout in seconds (from 1 to 59).

Start Move Timeout – is a time interval required for movement sensor to be in the moving state, to consider vehicle as moving.

6.9.1 Monitoring

I/O monitoring starts after enabling I/O element and setting up I/O parameters as it is shown below:

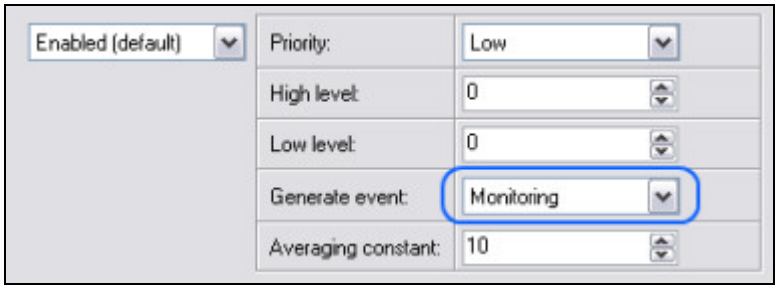

6.9.2 Event Generating

Events happen when the value of enabled I/O intersects thresholds (enter, exit or on both) predefined by High and Low level thresholds. Table below defines all available values of I/O settings.

Priority	low, high
High level	maximum threshold
Low level	minimum threshold
Generate event	on interval enter, on interval exit, on both enter and exit
Average constant	$1 – 2^{32}$ (4 Bytes)

6.9.3 Hysteresis

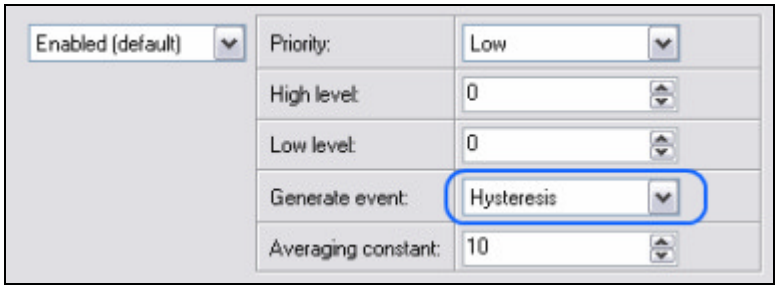

I/O elements can generate events according to hysteresis algorithm. If I/O event operand "Hysteresis" is selected, events will be generated as it is shown in the illustration below:

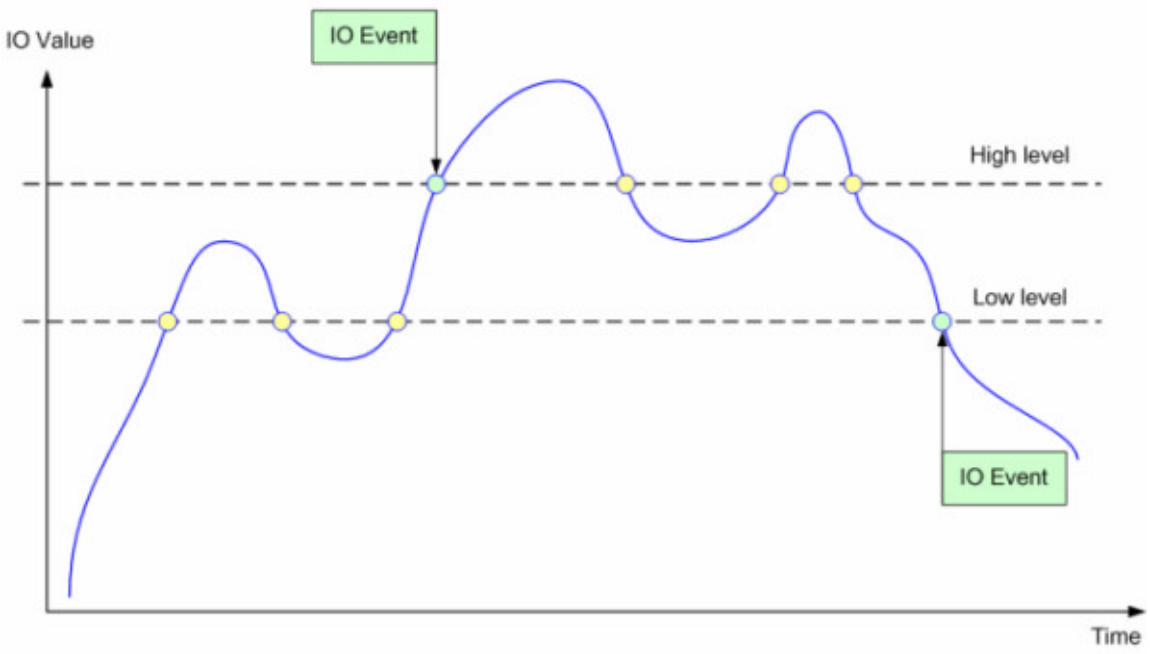

Figure 24. Event generation according hysteresis algorithm

7 SMS COMMAND LIST

7.1 SMS settings for FM3200

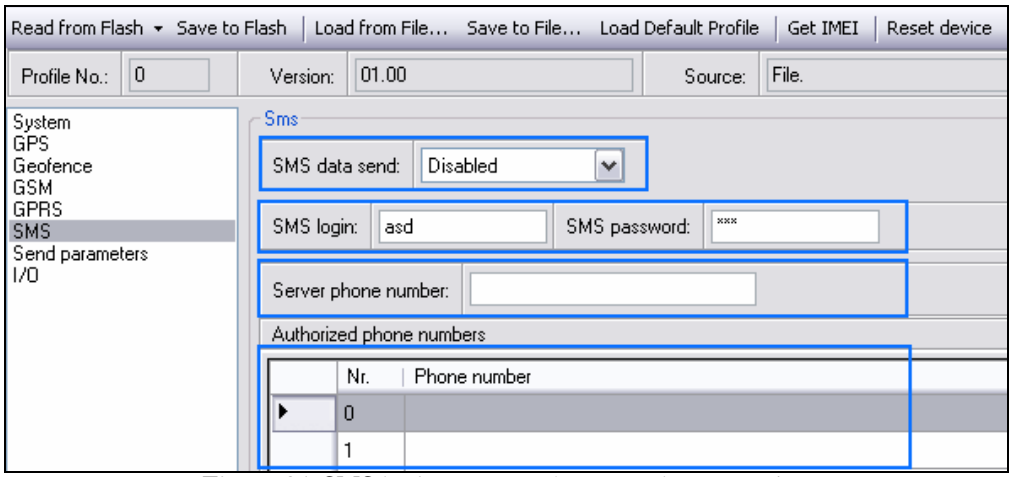

Figure 25. SMS login, password, server phone number and authorized phone number configuration

Essential fields in 'SMS Settings' are 'Login' and 'Password'. This login and password should be used with every SMS sent to FM3200 as identifiers and means of protection from SMS from unauthorised numbers.

Command structure:

<login><space><password><space><command>

Example:

asd 123 getgps

7.2 SMS command list

Command	Description	Response
getstatus	Modem Status information	Yes
getweektime	Current device time, Day of Week and amount of minutes passed since start of week	Yes
getops	List of currently available GSM operator	Yes
getcfgtime	Date and Time of last successful configuration	Yes
getgps	Current GPS data and time	Yes
cpureset	Reset CPU	No
resetprof	Reset all FLASH1 profile to default profile	No
getver	Device / Modem / Code version information	Yes
getinfo	Device runtime system information	Yes

deleterecords	Delete all records saved on FLASH	No
getio	Readout digital inputs and outputs	Yes
readio #	Readout input value according entered ID, # - ID value	Yes
setdigout ##	set digital outputs 0 – OFF, 1 – ON DO1 DO2 DO3 DO4	Yes
getparam #	Readout parameter value according entered ID. # - ID value.	Yes
setparam # #	Set parameter value according entered ID and Value. 1.# - ID value. 2.# - New Parameter Value	Yes
flush #,#,#,#,#,#,#	Initiates all data sending to specified target server 1.# - IMEI 2.# - APN 3.# - LOGIN 4.# - PASS 5.# - IP 6.# - PORT 7.# - MODE (0-TCP/1-UDP)	No

getstatus

Response details	Description
Data Link	Indicate module connection to server at the moment: 0 – Not connected, 1 – connected
GPRS	Indicate if GPRS is available at the moment
Phone	Voice Call status: 0 – ready, 1 – unavailable, 2 – unknown, 3 – ringing, 4 – call in progress, 5 – asleep
SIM	SIM Status: 0-ready, 1-pin, 2-puk, 3-pin2, 4-puk2
OP	Connected to GSM Operator: numerical id of operator
Bat	Battery charge level [0-5]
Signal	GSM Signal Quality [0-5]
Service	
NewSMS	Indicate if new message received
Roaming	0 – Home Network, 1 – roaming
SMSFull	SMS storage is full? 0 – ok, 1 – SMS storage full

Example: Data Link: 0 GPRS: 1 Phone: 0 SIM: 0 OP: 24602 Bat: 4 Signal: 5 Service: 1 NewSMS: 0 Roaming: 0 SMSFull: 0

getweektime

Response details	Description
Clock Sync	Indicates system clock synchronization status. 0 – System is not synchronized, 1 – System synchronized
DOW	Day Of Week – indicates current day of week starting from 0 – Monday, 1 – Tuesday, etc.
Time	Indicates current GMT time
WeekTime	Indicates time in minutes starting from Monday 00:00 GMT

Example: Clock Sync: 1 DOW: 4 Time 12:58 Weektime: 6538

getops

Response details	Description
LIST	Returns list of current available allowed operators.

Example: GSM OP LIST: 0. 24602

getcfgtime

Response details	Description
Date/Time	Returns last performed configuration date and time.

Example: Last Configuration was performed on: 2010.4.15 5:45:19

getgps

Response details	Description
GPS	Indicates valid (1) or invalid (0) GPS data
Sat	Count of currently available satellites
Lat	Latitude (Last good Latitude)
Long	Longitude (Last good Longitude)
Alt	Altitude
Speed	Ground speed, km/h
Dir	Ground direction, degrees
Date	Current date
Time	Current GMT time

Example: GPS:1 Sat:7 Lat:54.71473 Long:25.30304 Alt:147 Speed:0 Dir:77 Date: 2007/8/24 Time: 13:4:36

getver

Response details	Description
Code Ver	Firmware version
Device IMEI	IMEI
Device ID	Device ID is used to detect by server which type of configuration to load
Modem App Ver	Version of modem application
Modem REV Ver	Modem Firmware version

Example: Code Ver:0.48.17 Device IMEI:353976010139156 Device ID:000001 Modem APP Ver:2007.11.07 Modem REV Ver:04.13.00

getinfo

Response details	Description
INI	Device Initialization Time
RTC	RTC Time
RST	Restart Counter
ERR	Error Counter
SR	Number of Sent Records
BR	Number of broken records
CF	Profile CRC Fail counter
FG	Failed GPRS counter
FL	Failed link counter
UT	UPD Timeout counter
SMS	Sent SMS Counter
NOGPS	No GPS Timer
GPS	GPS receiver state. 0 – OFF, 1 – restarting, 2 – ON but no fix, 3 – ON and operational, 4 – sleep mode
SAT	Average satellites
RS	Reset Source Identification

Example: INI:2007/8/24 10:15 RTC:2007/8/24 12:43 RST:2 ERR:11 SR:182 BR:0 CF:0 FG:0 FL:0 UT:0 SMS:2 NOGPS:0:0 GPS:3 SAT:7 RS:7

getio

Response details	Description
DI#	Digital Input state
DO#	Digital Output state

Example: DI1:0 DI2:0 DO1:0 DO2:0

readio #

Response details	Description
ID	IO element ID
Value	IO Element value

Example: IO ID:3 Value:0

setdigout ##

Sets digital outputs to ON or OFF state. Value is written as a row for OUT1 and OUT2 values.

Example: 'setdigout 01' will set OUT2 to high level, while OUT1to low level.

getparam ####

Read parameter value. ID consists of 4 digits – first digit identifies profile, second, third and fourth identifies parameter ID as described in Parameter List chapter.

Response details	Description
ID	Profile number and parameter ID
Value	Parameter value

Example: 'getparam 1245' command will request server IP address in profile1.

setparam #### #

Sets new value for parameter. ID consists of 4 digits – first digit identifies profile, second, third and fourth identifies parameter ID as described in Parameter List chapter. In value field a new parameter value is entered.

Example: 'setparam 1245 127.0.0.1' will change configured IP address in profile1 with new value

flush #,#,#,#,#,#,#

Initiates all data sending by GPRS to specified target server. Comma separated parameters go as numbered:

1.# - IMEI
2.# - APN
3.# - GPRS LOGIN
4.# - GPRS PASSWORD
5.# - IP
6.# - PORT
7.# - MODE (0-TCP/1-UDP)

Parameters are separated by comma (no spaces needed). In case you don't need to enter parameter (Login/Pass) – do not put space, simply put comma and write next parameter.

Example: opa opa flush 353976012555151,banga,,,212.47.99.62,12050,0

Response details	Description
FLUSH SMS Accepted	FLUSH SMS Accepted
# records found on FLASH	Number of records found on FLASH
Minimum Records to Send: #	Number of minimum saved records to send
GPRS Enabled: #	State of the GPRS connection, 0 – disabled; 1 – enabled
Time Sync: #	Indicates time synchronization on the device, 0 – not synchronized; 1 – synchronized

Example: FLUSH SMS Accepted. 11 records found on FLASH. Minimum Records to Send: 1. GPRS Enabled: 1. Time Sync: 1.

8 Debug mode

FM3200 is able to transmit its current state when connected to PC using USB cable. It is used to detect errors and provide information to possible solutions when operating as unexpected. Download Terminal from: http://avl1.teltonika.lt/Downloads/Software/Terminal.rar.

After launching terminal choose baud rate 115200 and hardware control – none. Select COM port which is assigned to "FM22XX Port". Click on 'Start Log' button and save a new file. Then click 'Connect' to start receiving messages from FM3200.

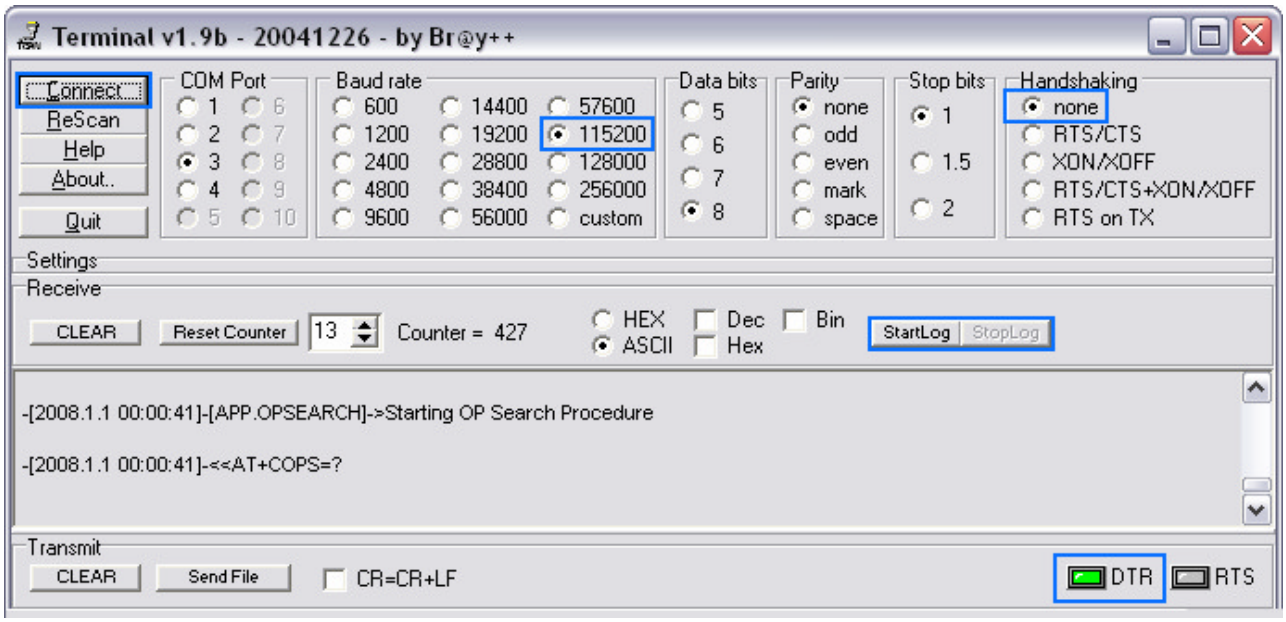

Figure 26. Terminal window

To debug NMEA GPS data, select COM port which is assigned to "FM22XX GPS", change baud rate value to 9600 and click "Connect".

9 Parameter List

FM3200 uses only one profile, therefore all changes to parameters must be done in profile1 (profile0 is for global parameters).

9.1 Global Parameters

Record search (ID=105)

Record search parameter is responsible for record searching order. Value of 0 arranging data starting from newest, while value of 1 arranging data starting from oldest.

Minimum value	Maximum value	Recommended value	Goes with (depends on) parameters	Value type
0	1	-	**Data Send interval (ID=270)**	S8

Link timeout (ID=107)

Link timeout in seconds, indicates link timeout after last record sending. Disconnection from server is not immediate after data packet is sent. Module disconnect from server after indicated timeout.

Minimum value	Maximum value	Recommended value	Goes with (depends on) parameters	Value type
5	259200	-	**Data Send interval (ID=270)**	U32

9.2 Data acquisition and sending parameters

Time based acquire interval (ID=11)

Time interval in seconds, indicating condition to acquire new record. 0 – disabled.

Minimum value	Maximum value	Recommended value	Goes with (depends on) parameters	Value type
0	9999999	5	**Distance based acquire interval (ID=12)** **Angle based coordinate acquisition (ID=13)**	U32

Distance based acquire interval (ID=12)

Distance in meters, indicating condition to acquire new record. Record is stored when the distance between previous record is greater than parameter's value. 0 – disabled

Minimum value	Maximum value	Recommended value	Goes with (depends on) parameters	Value type
0	65535	50	**Time based acquire interval (ID=11)** **Angle based coordinate acquisition (ID=13)**	U16

Angle based coordinate acquisition (ID=13)

Angle in degrees, indicating condition to acquire new record. If angle difference between last recorded coordinate and current position is greater than defined value, new record is stored. This parameter is operational, when speed is higher then 10km/h. 0 – disabled

Minimum value	Maximum value	Recommended value	Goes with (depends on) parameters	Value type
0	180	10	**Time based acquire interval (ID=11)** **Distance based acquire interval (ID=12)**	U32

Data Send interval (ID=270)

Time interval in seconds, indicating frequency of sending data to server. 0 – disabled.

Minimum value	Maximum value	Recommended value	Goes with (depends on) parameters	Value type
0	9999999	5	**GPRS Enable (ID=240)** **GPRS Data send week time schedule (ID=272)** **Minimum records number in packet (ID=232)**	U16

Minimum records number in packet (ID=232)

Minimum number of records in one data packet that can be sent to server. This parameter has higher priority than Data Send interval (ID=270).

Minimum value	Maximum value	Recommended value	Goes with (depends on) parameters	Value type
1	30	1	**Time based acquire interval (ID=11)** **Distance based acquire interval (ID=12)** **GPRS Data send week time schedule (ID=272)** **Data Send interval (ID=270)**	U8

GPRS Enable (ID=240)

Parameter allows or does not allow using GPRS. If GPRS is not allowed value is 0, if GPRS is allowed – 1.

Minimum value	Maximum value	Recommended value	Goes with (depends on) parameters	Value type
0	1	1	**Data Send interval (ID=270)** **Minimum records number in packet (ID=232)** **GPRS Data send week time schedule (ID=272)**	S8

GSM Operator list (ID=271)

Parameter defines operator list. According to this list module allows GPRS connection only while operating under listed operators. GSM operator codes are comma separated. Example: 24601, 24602, 24705…24503

Minimum value	Maximum value	Recommended value	Goes with (depends on) parameters	Value type
Empty	-	-	-	U32

GPRS Data send week time schedule (ID=272)

This parameter manages when it is allowed to open GPRS context. When module starts it is prohibited to open the context. When modem's GPRS context is being closed (for example changing network) it is allowed to open it only at defined time. It is possible to allow connections every 10 minutes up to once per day.

Example value: 7FFFFFFFFFFFFFFFFFFFFFFFFFFFFFFFFF

Format is described in the next chapter.

SMS Data send week time schedule (ID=273)

Parameter defines SMS data sending according to week time schedule. This parameter is used to set data sending on selected week days and hours. Minimum time step is 10 minutes.

Example value: 7FFFFFFFFFFFFFFFFFFFFFFFFFFFFFFFFF

Schedule parameter format

Time is defined as 20 byte array. First byte of array defines week days, the following 18 bytes define timestamps with 10 minute interval and the last byte is unused. In first byte, first bit (LSB) defines if module should connect to GPRS (send SMS) on Monday, second bit – on Tuesday and so on up to seventh bit – which means Sunday. Eighth bit (MSB) is not used. If bits value is 0 then device is not allowed to open GPRS context, but if it is already open – does not close it. If value is 1 it will work as day minutes are defined in rest of the bytes.

Day's minutes are defined by 18 bytes (144 bits). Every n'th bit (beginning from the first bit (LSB) and ending 18 bytes 8'th bit (MSB)) indicates every 10'th minute of the day (day has 1440 minutes).

Example:

GPRS will be allowed on Monday to Friday at 8:00 and 16:00 GMT the following value should be configured:

00011111 00000000 00000000 00000000 000000000 00000000 00000000 00000001 00000000 00000000 00000000 00000000 00000000 00000001 00000000 00000000 00000000 00000000 00000000

Red bits indicate that GPRS will be allowed everyday except Saturdays and Sundays. Blue bits indicate 480 and 720 minutes (480 min = 8 h and 720 min = 16 h). So the parameter value should be:

1F 00 00 00 00 00 00 01 00 00 00 00 00 01 00 00 00 00 00

It should be sent as UTF8 encoded string.

SMS Data send allow (ID=250)

Parameter allows or does not allow using binary SMS to send Avl data. If SMS use is not allowed value is 0, and 1 if allowed.

Minimum value	Maximum value	Recommended value	Goes with (depends on) parameters	Value type
0	1	0	**Format is described in the next chapter.** **SMS Data send week time schedule (ID=273)** **SMS Data send allow (ID=250)**	S8

24 Records time step (ID=274)

Module is able to send binary SMS which contains 24 coordinates. Parameter ID=274 defines time step (in milliseconds) between each coordinate.

Minimum value	Maximum value	Recommended value	Goes with (depends on) parameters	Value type
1	4294967295	3600000	**SMS Data send allow (ID=250)**Format is described in the next chapter. **SMS Data send week time schedule (ID=273)**	U32

9.3 Security settings and parameters

SMS User login (ID=252)

User login is used to ensure module security. Used in every SMS that is sent to device.

Example: ba321

Minimum value	Maximum value	Recommended value	Goes with (depends on) parameters	Value type
empty	5 char string	-	**SMS User password (ID=253)** **Server Number (ID=260)** **Authorized Number #1 (ID=261)**	S8[5]

SMS User password (ID=253)

User password is used to ensure module security. Used in every SMS that is sent to device.

Example: ab123

Minimum value	Maximum value	Recommended value	Goes with (depends on) parameters	Value type
Empty	5 char string	-	**SMS User login (ID=252)** **Server Number (ID=260)** **Authorized Number #1 (ID=261)**	S8[5]

Server Number (ID=260)

Value is server GSM number. To this number the SMS with 24 coordinates is sent.

Example: 37060012345

Minimum value	Maximum value	Recommended value	Goes with (depends on) parameters	Value type
Empty	16 char string	-	**SMS Data send allow (ID=250)**	S8[16]

Authorized Number #1 (ID=261)

Parameters ID=262 to ID=269 have values for 8 more authorized numbers If at least one number is entered then only those number can send messages to device.

Example: 37060012346

Minimum value	Maximum value	Recommended value	Goes with (depends on) parameters	Value type
Empty	16 char string	-	**SMS Data send allow (ID=250)**	S8[16]

9.4 GPRS access and address settings

APN Name (ID=242)

Parameter defines GPRS Access Point Name.

Minimum value	Maximum value	Recommended value	Goes with (depends on) parameters	Value type
Empty	32 char string	-	**GPRS Enable (ID=240)** **APN username (ID=243)** **APN Password (ID=244)**	S8[32]

APN username (ID=243)

Parameter defines APN username. In case operator does not use username for login, value should be empty.

Minimum value	Maximum value	Recommended value	Goes with (depends on) parameters	Value type
Empty	6 char string	-	**APN Name (ID=242)** **APN Password (ID=244)**	S8[6]

APN Password (ID=244)

Parameter defines APN password. . In case operator does not use password for login, value should be empty.

Minimum value	Maximum value	Recommended value	Goes with (depends on) parameters	Value type
Empty	6 char string	-	**APN Name (ID=242)** **APN username (ID=243)**	S8[6]

Data send protocol (ID=231)

Parameter defines GPRS data transport protocol. Module can use TCP or UDP transport protocol to send data to server. For TCP protocol value is 0, for UDP protocol value is 1.

Minimum value	Maximum value	Recommended value	Goes with (depends on) parameters	Value type
0	1	0	**GPRS Enable (ID=240)**	U8

Server IP address (ID=245)

Parameter defines Avl data destination server IP address. Example: 212.47.99.62

Minimum value	Maximum value	Recommended value	Goes with (depends on) parameters	Value type
Empty	16 char string	-	**GPRS Enable (ID=240)** **Server port number (ID=246)**	S8[16]

Server port number (ID=246)

Parameter defines Avl data destination server port number. Example: 12050

Minimum value	Maximum value	Recommended value	Goes with (depends on) parameters	Value type
Empty	65535	-	**GPRS Enable (ID=240)** **Server IP address (ID=245)**	U16

9.5 Geofence zones settings and parameters

This chapter explains how to get all parameters for the first GeoFence zone (all ID numbers are for the 1st zone). And at the end of the chapter (part 1.6.7) is presented a table with the IDs of all the rest GeoFence zones.

GeoFence border width (ID=20)

GeoFence border thickness, measured in meters.

Minimum value	Maximum value	Recommended value	Goes with (depends on) parameters	Value type
100	9999999	1000	**GeoFence Zone #1 Configuration Parameter (ID=30)**	U32

GeoFence Zone #1 Configuration Parameter (ID=30)

GeoFence Zone #1 Configuration is 1st zone basic settings parameter: GeoFence zone shape, priority, zone entering event, zone-leaving event. There are two GeoFence zone shapes: circle, rectangle. GeoFence Zone priority has eight levels (0 to 7). Parameter value is four bytes that have bit encoded values.

0 bit – GeoFence zone shape
1-3 bits – GeoFence event priority
4 bit – Zone entering event
5 bit – Zone leaving event
6-31 bits reserved

Example:

Value to set: 51 (integer) is [M]00110011[L], where GeoFence Zone shape is Rectangular, priority of 1, Zone entering event is enabled, Zone leaving event is enabled.

Minimum value	Maximum value	Recommended value	Goes with (depends on) parameters	Value type
0	-	-	**GeoFence border width (ID=20)** **GeoFence x1 (ID=31)** **GeoFence y1 (ID=32)** **GeoFence x2 (ID=33)** **GeoFence y2 (ID=34)**	U32

GeoFence x1 (ID=31)

Parameter has two meanings dependent on zone shape. If shape is rectangular, then ID=31 is left down corner X coordinate in WGS. If shape is circle, then ID=31 is center of that circle X coordinate in WGS.

Sample value: 25.30528

Minimum value	Maximum value	Recommended value	Goes with (depends on) parameters	Value type
-180.0	180.0	-	**GeoFence border width (ID=20)** **GeoFence Zone #1 Configuration Parameter (ID=30)**	Float

GeoFence y1 (ID=32)

Parameter has two meanings dependent on zone shape. If shape is rectangular, then ID=32 is left down corner Y coordinate in WGS. If shape is circle, then ID=32 is center of that circle Y coordinate in WGS.

Minimum value	Maximum value	Recommended value	Goes with (depends on) parameters	Value type
-90.0	90.0	-	**GeoFence border width (ID=20) GeoFence Zone #1 Configuration Parameter (ID=30)**	Float

GeoFence x2 (ID=33)

Parameter has two meanings dependent on zone shape. If shape is rectangular, then ID=33 is right upper corner X coordinate in WGS. If shape is circle, then ID=33 is radius of circle with center of ID=31 and ID=32.

Minimum value	Maximum value	Recommended value	Goes with (depends on) parameters	Value type
-180.0	180.0	-	**GeoFence border width (ID=20) GeoFence Zone #1 Configuration Parameter (ID=30)**	Float

GeoFence y2 (ID=34)

If shape is rectangular, then ID=34 is right upper corner Y coordinate in WGS. If shape circle, ID=34 is not used.

Minimum value	Maximum value	Recommended value	Goes with (depends on) parameters	Value type
-90.0	90.0	-	**GeoFence border width (ID=20) GeoFence Zone #1 Configuration Parameter (ID=30)**	Float

All the rest zones

Other 5 GeoFence zones parameters have the same logic as shown in GeoFence Zone #1.

GeoFence Zone Number	GeoFence Zone's parameters
2	40 – 44
3	50 – 54
4	60 – 64
5	70 – 74

9.6 System parameters

Sleep mode (ID=000)

Parameter enables or disables sleep mode for FM4100: 0 – disabled, 1 – enabled.

Minimum value	Maximum value	Recommended value	Goes with (depends on) parameters	Value type
0	1	-	-	Enum

GPS Enable (ID=10)

Parameter enables or disables GPS receiver. When GPS is disabled value is 0, and 1 when enabled.

Minimum value	Maximum value	Recommended value	Goes with (depends on) parameters	Value type
0	1	-	**Time based acquire interval (ID=11)** **Distance based acquire interval (ID=12)** **Angle based coordinate acquisition (ID=13)**	S8

9.7 IO properties

IO properties – are additional data sources which are recorded along with usual GPS data.

IO#1 property parameter (ID=300)

Parameter defines IO property value. Possible values: enabled (value 1), disabled (value 0).

0	1
Disabled	Enabled

Minimum value	Maximum value	Recommended value	Goes with (depends on) parameters	Value type
0	byte	-	**IO#1 priority (ID=301)** **IO#1 High level (ID=302)** **IO#1 Low level (ID=303)** **IO#1 logic operand (ID=304)** **IO#1 averaging length (ID=305)**	S8

IO#1 priority (ID=301)

Parameter defines IO property type of priority: 0 is low, 1 – high, 2 – panic, 3 – security priority type.

Minimum value	Maximum value	Recommended value	Goes with (depends on) parameters	Value type
0	3	0	**IO#1 property parameter (ID=300)** **IO#1 High level (ID=302)** **IO#1 Low level (ID=303)** **IO#1 logic operand (ID=304)** **IO#1 averaging length (ID=305)**	S8

IO#1 High level (ID=302)

Parameter defines high value of triggered IO property. This parameter is used to set thresholds for IO properties to generate events.

Minimum value	Maximum value	Recommended value	Goes with (depends on) parameters	Value type
-2147483648	2147483648	1	**IO#1 property parameter (ID=300)** **IO#1 priority (ID=301)** **IO#1 Low level (ID=303)** **IO#1 logic operand (ID=304)** **IO#1 averaging length (ID=305)**	S32

IO#1 Low level (ID=303)

Parameter defines low value of triggered IO property. This parameter is used to set thresholds for IO properties to generate events.

Minimum value	Maximum value	Recommended value	Goes with (depends on) parameters	Value type
-2147483648	2147483648	0	**IO#1 property parameter (ID=300)** **IO#1 priority (ID=301)** **IO#1 High level (ID=302)** **IO#1 logic operand (ID=304)** **IO#1 averaging length (ID=305)**	S32

IO#1 logic operand (ID=304)

Parameter defines when event is sent: 0: on range exit, 1: on range entrance, 2: both, 3: monitoring.

Minimal value	Maximum value	Recommended value	Goes with (depends on) parameters	Value type
0	3	3	**IO#1 property parameter (ID=300)** **IO#1 priority (ID=301)** **IO#1 High level (ID=302)** **IO#1 Low level (ID=303)** **IO#1 averaging length (ID=305)**	S8

IO#1 averaging length (ID=305)

Parameter defines IO property sample length to average. If no averaging needed default value is 1.

Minimum value	Maximum value	Recommended value	Goes with (depends on) parameters	Value type
0	2147483648	1	**IO#1 property parameter (ID=300)** **IO#1 priority (ID=301)** **IO#1 High level (ID=302)** **IO#1 Low level (ID=303)** **IO#1 logic operand (ID=304)**	S32

Other IO property elements are configuring in same logic. All IO elements parameter list is below.

IO Element Number	**IO element parameters**
IO#0 – Digital input 1	300 – 305
IO#1 – Digital input 2	310 – 315
IO#2 – Digital output 1	320 – 325
IO#3 – Digital output 2	330 – 335
IO#4 – PDOP	340 – 345
IO#5 – HDOP	350 – 355
IO#6 – External Power voltage	360 – 365
IO#7 – GPS power	370 – 375
IO#8 – PCB temperature	380 – 385
IO#9 – Movement sensor	390 – 395
IO#10 – Odometer	400 – 405
IO#11 – Current Operator Code	410 – 415
IO#12 – Speedometer	420 – 425
IO#13 – Battery voltage	430 – 435
IO#14 – Battery current	440 – 445

10 MOUNTING RECOMMENDATIONS

10.1 Connecting Wires

- Wires should be connected while module is not plugged in.
- Wires should be fastened to the other wires or non-moving parts. Try to avoid heat emitting and moving objects near the wires.
- The connections should not be seen very clearly. If factory isolation was removed while connecting wires, it should be applied again.
- If the wires are placed in the exterior or in places where they can be damaged or exposed to heat, humidity, dirt, etc., additional isolation should be applied.
- Wires cannot be connected to the board computers or control units.

10.2 Connecting Power Source

- Be sure that after the car computer falls asleep, power is still available on chosen wire. Depending on a car, this may happen in 5 to 30 minutes period.
- When module is connected, be sure to measure voltage again if it did not decrease.
- It is recommended to connect to the main power cable in the fuse box.

10.3 Connecting Ignition Wire

- Be sure to check if it is a real ignition wire – power does not disappear while starting the engine.
- Check if this is not an ACC wire (when key is in the first position, most electronics of the vehicle are available).
- Check if power is still available when you turn off any of vehicles devices.
- Ignition is connected to the ignition relay output. As alternative, any other relay, which has power output, when ignition is on, may be chosen.

10.4 Connecting Ground Wire

- Ground wire is connected to the vehicle frame or metal parts that are fixed to the frame.
- If the wire is fixed with the bolt, the loop must be connected to the end of the wire.
- For better contact scrub paint from the place where loop is connected.

10.5 Connecting Antennas

- When placing antennas avoid easily reached places.
- Avoid GPS antenna placement under metal surfaces.
- Avoid placing FM3200 device near car radio, speakers or alarm systems.
- GPS antenna must be placed so its state is as horizontal as possible (if antenna is leant more than 30 degrees, it is considered incorrect mounting).
- GPS antenna cable cannot be bent more than 80 degrees.
- GPS antenna must be placed sticker facing down

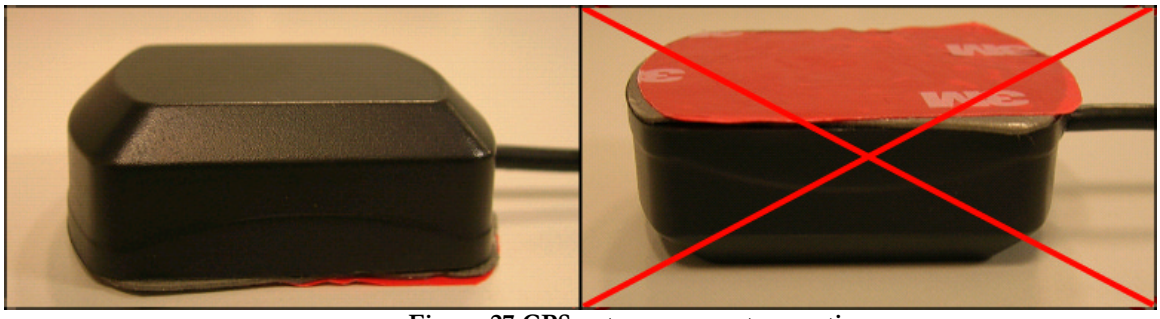

Figure 27 GPS antenna correct mounting.

It is recommended to place GPS antenna behind dashboard as close to the window as possible. A good example of GPS antenna placement is displayed in a picture below (area colored green).

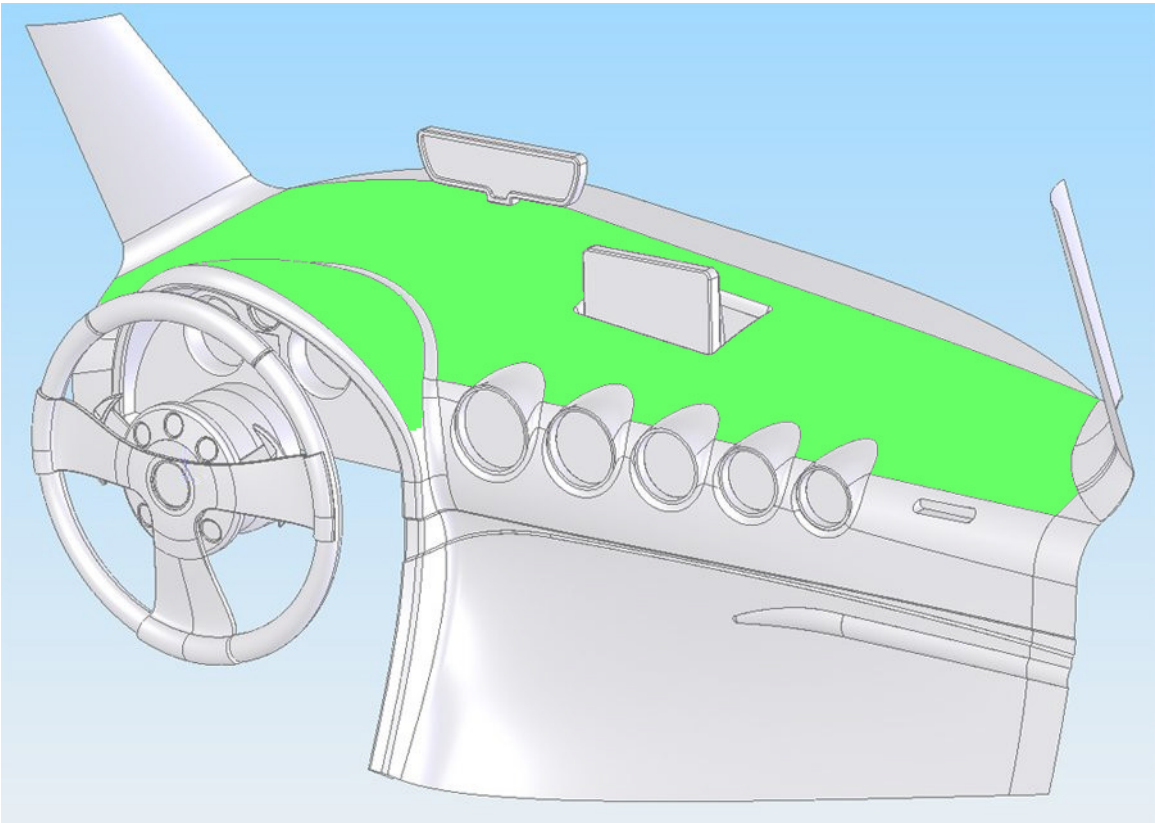

Figure 28. Correct placement of FM3200

10.6 Module Installation

- Module should not be seen or easily reached.
- Module should be firmly fixed to the surface or cables.
- Module cannot be fixed to heat emitting or moving parts.
- SIM card should be inserted in the module while the connector is plugged off (while module has no power).

11 CHANGE LOG

Nr.	Date	Version	Comments
1	091103	0.1	Preliminary draft release.
2	091105	0.2	Added paragraph 6.9.3 Hysteresis, describing event generation according hysteresis algorithm.
3	091116	0.3	FM3200 view & dimensions figure added.
4	100211	0.4	New Skytraq GPS module details added.
5	100402	0.5	Movement sensor's Start move timeout parameter's description added.
6	100423	0.6	Data acquisition info updated.
7	100721	0.7	Paragraph "9.7 IO parameters" formatting fixed.